Dist	COUNTY	ROUTE	KILOMETER POST TOTAL PROJECT	SHEET No.	TOTAL SHEETS
01	Men	101	R69.4/R78.9	501	939

Joyce K. Loftus 9-22-11
REGISTERED CIVIL ENGINEER DATE

1-23-12
PLANS APPROVAL DATE

REGISTERED PROFESSIONAL ENGINEER Joyce K. Loftus No. 38426 Exp. 3-31-13 CIVIL STATE OF CALIFORNIA

THE STATE OF CALIFORNIA OR ITS OFFICERS OR AGENTS SHALL NOT BE RESPONSIBLE FOR THE ACCURACY OR COMPLETENESS OF ELECTRONIC COPIES OF THIS PLAN SHEET.

Caltrans Metric

OVERHEAD SIGN QUANTITIES

SIGN NUMBER	STATION	SHEET NUMBER	FURNISH SIGN STRUCTURE (TRUSS)	INSTALL SIGN STRUCTURE (TRUSS)	FURNISH SIGN STRUCTURE (LIGHTWEIGHT)	INSTALL SIGN STRUCTURE (LIGHTWEIGHT)	760 mm CIDH CONCRETE PILE (SIGN FOUNDATION)	920 mm CIDH CONCRETE PILE (SIGN FOUNDATION)	1524 mm CIDH CONCRETE PILE (SIGN FOUNDATION)	REMOVE SIGN STRUCTURE
			kg	kg	kg	kg	m	m	m	EA
CMS-1	"A" 97+20	PD-2	6 700	6 700					6.7	
EMS-1	"A" 97+30	PD-2			1 330	1 330		4.0		
CS-48	"W" 166+32	PD-21	6 078	6 078						
CMS (Exist)	"F1" 17+00±	PD-27								1
EMS-2	"NW2" 185+25	PD-28			1 103	1 103	3.4			
CMS-2	"NW2" 185+70	PD-28	6 700	6 700					6.7	
TOTAL			19 478	19 478	2 433	2 433	3.4	4.0	13.4	1

NOTES:

1. FOR ADDITIONAL CMS AND EMS INFORMATION, SEE ELECTRICAL PLANS.
2. FOR CS-48 FOUNDATION INFORMATION, SEE STRUCTURE PLANS.

SIGN QUANTITIES

SQ-1

STATE OF CALIFORNIA - DEPARTMENT OF TRANSPORTATION
Caltrans
TRAFFIC

FUNCTIONAL SUPERVISOR: SHAUN A. RICE
CALCULATED-DESIGNED BY: JOYCE LOFTUS
CHECKED BY: JEFF JEWETT
REVISED BY
DATE REVISED

LAST REVISION 04-23-10
DATE PLOTTED => 28-JAN-2012
TIME PLOTTED => 06:29

Dist	COUNTY	ROUTE	KILOMETER POST TOTAL PROJECT	SHEET No.	TOTAL SHEETS
01	Men	101	R69.4/R78.9	502	939

Joyce K. Loftus 9-22-11
REGISTERED CIVIL ENGINEER DATE

1-23-12
PLANS APPROVAL DATE

REGISTERED PROFESSIONAL ENGINEER Joyce K. Loftus No. 38426 Exp. 3-31-13 CIVIL STATE OF CALIFORNIA

THE STATE OF CALIFORNIA OR ITS OFFICERS OR AGENTS SHALL NOT BE RESPONSIBLE FOR THE ACCURACY OR COMPLETENESS OF ELECTRONIC COPIES OF THIS PLAN SHEET.

ROADSIDE SIGN QUANTITIES

SIGN NUMBER (Sht-No.)	SIGN CODE FEDERAL	SIGN CODE CALIFORNIA	PANEL SIZE (mm)	"C" DIM IN METERS	POST SIZE AND LENGTH 89 X 89	89 X 140	140 X 140	140 X 184	TYPE L Lt	TYPE L Rt	TYPE M Lt	TYPE M Rt	ROADSIDE SIGN ONE POST (EACH)	ROADSIDE SIGN TWO POST (EACH)	REMOVE ROADSIDE SIGN (EACH)	RELOCATE ROADSIDE SIGN (EACH)	INSTALL SIGN (SSBM) (EACH)	INSTALL ROADSIDE SIGN (LWBP) (EACH)	REMARKS
1-1	R4-3														1				
2-1		W69													1				
2-2	W6-2														1				
2-3	W6-2														1				
2-4		G86	3353 X 2438	2.1							7.3 m	6.1 m						1	
2-5		R6-4	1219 X 1524	2.1			5.5 m						1						
3-1		R6-3	1219 X 1524	2.1			5.5 m						1						
3-2		G5	5791 X 2134	2.1					6.7 m	6.7 m								1	
3-3		R6-3 R48-1													1				
3-4		W75(Lt)													1				
3-5		G85	3962 X 2743	2.1					7.9 m	7.9 m								1	
3-6		S32 S32A														1			
3-7		G84-3	1219 X 1524	2.1			5.5 m						1						"EXIT 568"
3-8	R4-1	W11(Rt)													1				
3-9	R4-1	W11(Rt)													1				
3-10		R2-1(55) R48-1													1				
3-11		R44B(Mod)	762 X 914	2.1		4.9 m							1						
3-12	R2-1(65)	R48-1	1219 X 1524 914 X 457	1.5			5.5 m						1						
SHEET TOTAL													5	0	9	1	0	3	————

NOTES:

1. ALL DIMENSIONS ARE IN MILLIMETERS UNLESS OTHERWISE SHOWN.
2. EXACT LOCATION AND POSITION OF ROADSIDE SIGNS TO BE DETERMINED BY THE ENGINEER.
3. POST LENGTHS GIVEN ARE APPROXIMATE.
4. "C" DIM = VERTICAL CLEARANCE EP TO BOTTOM OF SIGN PANEL.
5. LWBP = LAMINATED WOOD BOX POST.
6. SIGN PANEL TO BE MOUNTED ON SIGNAL STANDARD DIRECTLY ABOVE THE SIGNAL MAST ARM CONNECTION.
7. THE G36<CA> SIGN PANEL IS ATTACHED TO THE G8-1<CA> SIGN PANEL.
8. SIGN PANEL TO BE MOUNTED ON LIGHTING STANDARD.

SIGN QUANTITIES

SQ-2

REVISED BY | DATE REVISED
JOYCE LOFTUS | JEFF JEWETT
CALCULATED-DESIGNED BY | CHECKED BY
FUNCTIONAL SUPERVISOR | SHAUN A. RICE
STATE OF CALIFORNIA - DEPARTMENT OF TRANSPORTATION
Caltrans TRAFFIC

LAST REVISION 09-19-11 | DATE PLOTTED => 28-JAN-2012 | TIME PLOTTED => 06:29

Dist	COUNTY	ROUTE	KILOMETER POST TOTAL PROJECT	SHEET No.	TOTAL SHEETS
01	Men	101	R69.4/R78.9	503	939

Joyce K Loftus 9-22-11
REGISTERED CIVIL ENGINEER DATE

1-23-12
PLANS APPROVAL DATE

REGISTERED PROFESSIONAL ENGINEER Joyce K. Loftus No. 38426 Exp. 3-31-13 CIVIL STATE OF CALIFORNIA

THE STATE OF CALIFORNIA OR ITS OFFICERS OR AGENTS SHALL NOT BE RESPONSIBLE FOR THE ACCURACY OR COMPLETENESS OF ELECTRONIC COPIES OF THIS PLAN SHEET.

ROADSIDE SIGN QUANTITIES (CONTINUED)

SIGN NUMBER (Sht-No.)	SIGN CODE FEDERAL	SIGN CODE CALIFORNIA	PANEL SIZE (mm)	"C" DIM IN METERS	POST SIZE AND LENGTH 89 X 89	89 X 140	140 X 140	140 X 184	TYPE L L†	TYPE L R†	TYPE M L†	TYPE M R†	ROADSIDE SIGN ONE POST (EACH)	ROADSIDE SIGN TWO POST (EACH)	REMOVE ROADSIDE SIGN (EACH)	RELOCATE ROADSIDE SIGN (EACH)	INSTALL SIGN (SSBM) (EACH)	INSTALL ROADSIDE SIGN (LWBP) (EACH)	REMARKS
4-1	R2-1(65)	R48-1													1				
4-2		SR101 SR102	914 X 762 914 X 305	2.1		4.9 m							1						
4-3	R4-7														1				
4-4	W4-1R		1219 X 1219	2.1			5.5 m						1						
4-5	W6-1														1				
4-6	R5-1 R5-1a														1				
4-7	R5-1 R5-1a														1				
4-8	W3-1		1219 X 1219	1.5		4.9 m							1						
4-9	W6-3														1				
5-1	R5-10c		610 X 305	1.5	3.0 m								1						
5-2	R6-1L R6-1R		1372 X 457 1372 X 457	0.5	2.4 m								1						
5-3	M3-1	G92 G26-2(101) G44	1219 X 762 711 X 610 610 X 305 533 X 381	0.6		4.3 m							1						
5-4		SR101 SR102	914 X 762 914 X 305	1.5		4.3 m							1						
5-5	R5-1 R5-1a		914 X 914 914 X 610	0.6		3.7 m							1						
5-6	R5-1 R5-1a		914 X 914 914 X 610	0.6		3.7 m							1						
5-7	R1-1		762	1.5	3.7 m								1						
5-8	R6-1L R6-1R		1372 X 457 1372 X 457	0.5	2.4 m								1						
5-9	R3-1		610 X 610	1.5	3.7 m								1						
5-10	M3-1	G92 G26-2(101) G43	1219 X 762 711 X 610 610 X 305 533 X 381	0.6		4.3 m							1						
5-11		W70													1				
5-12		R58													1				
SHEET TOTAL													13	0	8	0	0	0	————

SIGN QUANTITIES

SQ-3

STATE OF CALIFORNIA - DEPARTMENT OF TRANSPORTATION
Caltrans
TRAFFIC

FUNCTIONAL SUPERVISOR: SHAUN A. RICE
CALCULATED-DESIGNED BY: JOYCE LOFTUS
CHECKED BY: JEFF JEWETT
REVISED BY / DATE REVISED

LAST REVISION 04-23-10 | DATE PLOTTED => 28-JAN-2012 | TIME PLOTTED => 06:29

Dist	COUNTY	ROUTE	KILOMETER POST TOTAL PROJECT	SHEET No.	TOTAL SHEETS
01	Men	101	R69.4/R78.9	504	939

Joyce K Loftus 9-22-11
REGISTERED CIVIL ENGINEER DATE

1-23-12
PLANS APPROVAL DATE

REGISTERED PROFESSIONAL ENGINEER Joyce K. Loftus No. 38426 Exp. 3-31-13 CIVIL STATE OF CALIFORNIA

THE STATE OF CALIFORNIA OR ITS OFFICERS OR AGENTS SHALL NOT BE RESPONSIBLE FOR THE ACCURACY OR COMPLETENESS OF ELECTRONIC COPIES OF THIS PLAN SHEET.

ROADSIDE SIGN QUANTITIES (CONTINUED)

SIGN NUMBER (Sht-No.)	SIGN CODE FEDERAL	SIGN CODE CALIFORNIA	PANEL SIZE (mm)	"C" DIM IN METERS	POST SIZE AND LENGTH 89 X 89	89 X 140	140 X 140	140 X 184	TYPE L L†	TYPE L R†	TYPE M L†	TYPE M R†	ROADSIDE SIGN ONE POST (EACH)	ROADSIDE SIGN TWO POST (EACH)	REMOVE ROADSIDE SIGN (EACH)	RELOCATE ROADSIDE SIGN (EACH)	INSTALL SIGN (SSBM) (EACH)	INSTALL ROADSIDE SIGN (LWBP) (EACH)	REMARKS
5-13		R57 R45													1				
5-14		SR101 SR102	914 X 762 914 X 305	1.5		4.3 m							1						
5-15	M3-3	G92 G26-2(101) G43	1219 X 762 711 X 610 610 X 305 533 X 381	0.6		4.3 m							1						
5-16	M3-3	G92 G26-2(101) G44	1219 X 762 711 X 610 610 X 305 533 X 381	0.6		4.3 m							1						
5-17	R6-1L R6-1R		1372 X 457 1372 X 457	0.5	2.4 m								1						
5-18	R1-1		762	1.5	3.7 m								1						
5-19	R5-1 R5-1a		914 X 914 914 X 610	0.6		3.7 m							1						
5-20	R5-10c		610 X 305	1.5	3.0 m								1						
5-21	R5-1 R5-1a		914 X 914 914 X 610	0.6		3.7 m							1						
5-22	R6-1L R6-1R		1372 X 457 1372 X 457	0.5	2.4 m								1						
5-23	R3-1		610 X 610	1.5	3.7 m								1						
5-24	W2-2L D1-2		914 X 914 914 X 610	1.2		5.5 m							1						
5-25	W2-2L D1-2														1				
5-26		G11-2	914 X 533	0.9	3.0 m								1						
5-27		G11-2													1				
6-1	W4-1R		1219 X 1219	2.1			5.5 m						1						
6-2	W3-1		1219 X 1219	1.5		4.9 m							1						
6-3		G84-3	1219 X 1524	2.1			5.5 m						1						"EXIT 568"
6-4		G85	4267 X 2743	2.1					7.9 m	8.5 m								1	
7-1	W6-2		1219 X 1219	2.1			5.5 m						1						
7-2	W6-2		1219 X 1219	2.1			5.5 m						1						
7-3	W9-1R		1219 X 1219	2.1			5.5 m						1						
7-4	W4-2R		1219 X 1219	2.1			5.5 m						1						
7-5	W4-2R		1219 X 1219	2.1			5.5 m						1						
SHEET TOTAL													20	0	3	0	0	1	————

SIGN QUANTITIES

SQ-4

STATE OF CALIFORNIA - DEPARTMENT OF TRANSPORTATION
Caltrans
TRAFFIC

FUNCTIONAL SUPERVISOR: SHAUN A. RICE
CALCULATED-DESIGNED BY: JOYCE LOFTUS
CHECKED BY: JEFF JEWETT
REVISED BY / DATE REVISED

LAST REVISION 09-19-11
DATE PLOTTED => 28-JAN-2012
TIME PLOTTED => 06:29

Dist	COUNTY	ROUTE	KILOMETER POST TOTAL PROJECT	SHEET No.	TOTAL SHEETS
01	Men	101	R69.4/R78.9	505	939

Joyce K. Loftus 9-22-11
REGISTERED CIVIL ENGINEER DATE

1-23-12
PLANS APPROVAL DATE

REGISTERED PROFESSIONAL ENGINEER Joyce K. Loftus No. 38426 Exp. 3-31-13 CIVIL STATE OF CALIFORNIA

THE STATE OF CALIFORNIA OR ITS OFFICERS OR AGENTS SHALL NOT BE RESPONSIBLE FOR THE ACCURACY OR COMPLETENESS OF ELECTRONIC COPIES OF THIS PLAN SHEET.

Caltrans Metric

ROADSIDE SIGN QUANTITIES (CONTINUED)

SIGN NUMBER (Sht-No.)	SIGN CODE FEDERAL	SIGN CODE CALIFORNIA	PANEL SIZE (mm)	"C" DIM IN METERS	POST SIZE AND LENGTH 89 X 89	89 X 140	140 X 140	140 X 184	TYPE L L†	TYPE L R†	TYPE M L†	TYPE M R†	ROADSIDE SIGN ONE POST (EACH)	ROADSIDE SIGN TWO POST (EACH)	REMOVE ROADSIDE SIGN (EACH)	RELOCATE ROADSIDE SIGN (EACH)	INSTALL SIGN (SSBM) (EACH)	INSTALL ROADSIDE SIGN (LWBP) (EACH)	REMARKS
8-1	R4-1		914 X 1219	2.1		4.9 m							1						
8-2		R11 R11A-2	1829 X 1829 1829 X 533	1.2			5.5 m							1					
8-3	R4-7		1219 X 1524	2.1			5.5 m						1						
8-4		R11 R11A-2	1829 X 1829 1829 X 533	1.2			5.5 m							1					
8-5	R2-1(55)		1219 X 1524	2.1			5.5 m						1						
8-6		R6-3	1219 X 1524	2.1			5.5 m						1						
8-7		R6-4	1219 X 1524	2.1			5.5 m						1						
9-1	R4-3		1219 X 1524	2.1			5.5 m						1						
9-2	R2-1(65)		1219 X 1524	2.1			5.5 m						1						
10-1	W6-3		1219 X 1219	2.1			5.5 m						1						
10-2	W6-1		1219 X 1219	2.1			5.5 m						1						
14-1		G68-1(1 MILE)	2896 X 1524	2.1				5.5 m						1					
22-1		G86-1	2743 X 1372	2.1			5.5 m							1					
22-2	R2-1(55)		1219 X 1524	2.1			5.5 m						1						
23-1		G85-11	3353 X 2591	2.1							7.3 m	7.9 m						1	
23-2		G84-3	1219 X 1524	2.1			5.5 m						1						"EXIT 573"
24-1	W3-1		1219 X 1219	1.5		4.9 m							1						
24-2	R5-1 R5-1a		914 X 914 914 X 610	1.8		4.9 m							1						
24-3	R5-1 R5-1a		914 X 914 914 X 610	1.8		4.9 m							1						
24-4	W4-1R		1219 X 1219	2.1			5.5 m						1						
24-5	R4-7 OM1-3		610 X 762 457 X 457	1.2	3.7 m								1						
24-6	W3-2		914 X 914	1.5		4.3 m							1						
SHEET TOTAL													17	4	0	0	0	1	————

STATE OF CALIFORNIA - DEPARTMENT OF TRANSPORTATION
Caltrans
TRAFFIC

FUNCTIONAL SUPERVISOR: SHAUN A. RICE
CALCULATED-DESIGNED BY: JOYCE LOFTUS
CHECKED BY: JEFF JEWETT
REVISED BY
DATE REVISED

SIGN QUANTITIES

SQ-5

LAST REVISION 09-19-11
DATE PLOTTED => 28-JAN-2012
TIME PLOTTED => 06:29

Dist	COUNTY	ROUTE	KILOMETER POST TOTAL PROJECT	SHEET No.	TOTAL SHEETS
01	Men	101	R69.4/R78.9	506	939

Joyce K Loftus 9-22-11
REGISTERED CIVIL ENGINEER DATE

1-23-12
PLANS APPROVAL DATE

REGISTERED PROFESSIONAL ENGINEER Joyce K. Loftus No. 38426 Exp. 3-31-13 CIVIL STATE OF CALIFORNIA

THE STATE OF CALIFORNIA OR ITS OFFICERS OR AGENTS SHALL NOT BE RESPONSIBLE FOR THE ACCURACY OR COMPLETENESS OF ELECTRONIC COPIES OF THIS PLAN SHEET.

Caltrans Metric

ROADSIDE SIGN QUANTITIES (CONTINUED)

SIGN NUMBER (Sht-No.)	SIGN CODE FEDERAL	SIGN CODE CALIFORNIA	PANEL SIZE (mm)	"C" DIM IN METERS	POST SIZE AND LENGTH 89 X 89	89 X 140	140 X 140	140 X 184	TYPE L Lt	TYPE L Rt	TYPE M Lt	TYPE M Rt	ROADSIDE SIGN ONE POST (EACH)	ROADSIDE SIGN TWO POST (EACH)	REMOVE ROADSIDE SIGN (EACH)	RELOCATE ROADSIDE SIGN (EACH)	INSTALL SIGN (SSBM) (EACH)	INSTALL ROADSIDE SIGN (LWBP) (EACH)	REMARKS
25-1	R5-10c		610 X 305	1.5	3.0 m								1						
25-2	R5-1 R5-1a		914 X 914 914 X 610	0.6		3.7 m							1						
25-3	R1-1		762	1.5	3.7 m								1						
25-4	R6-1L R6-1R		1372 X 457 1372 X 457	0.5	2.4 m								1						
25-5	M3-1	G92 G26-2(101) G44	1219 X 762 711 X 610 610 X 305 533 X 381	0.6		4.3 m							1						
25-6		SR101 SR102	914 X 762 914 X 305	1.5		4.3 m							1						
25-7	R5-1 R5-1a		914 X 914 914 X 610	0.6		3.7 m							1						
25-8	R6-1L R6-1R		1372 X 457 1372 X 457	0.5	2.4 m								1						
25-9	R3-1		610 X 610	1.5	3.7 m								1						
25-10	W3-2		914 X 914	1.5		4.3 m							1						
25-11	M3-1	G92 G26-2(101) G43	1219 X 762 711 X 610 610 X 305 533 X 381	0.6		4.3 m							1						
25-12		W69-1.1	1524 X 1524	2.1			6.1 m							1					
25-13	W2-6 W13-1(20)		914 X 914 762 X 762	1.2		4.9 m							1						
25-14	W11-2 W16-7pL		914 X 914 762 X 457	2.1		5.5 m							1						
25-15		G8	1219 X 914	2.1		4.9 m							1						
25-16	R1-2		914	2.1	4.3 m								1						
25-17	M3-3	G92 G26-2(101) G43	1219 X 762 711 X 610 610 X 305 533 X 381	0.6		4.3 m							1						
25-18		SR101 SR102	914 X 762 914 X 305	1.5		4.3 m							1						
25-19	W2-6 W13-1(20)		914 X 914 762 X 762	1.2		4.9 m							1						
25-20	W11-2 W16-7pL		914 X 914 762 X 457	2.1		5.5 m							1						
SHEET TOTAL													19	1	0	0	0	0	————

SIGN QUANTITIES

SQ-6

STATE OF CALIFORNIA - DEPARTMENT OF TRANSPORTATION
Caltrans
TRAFFIC

FUNCTIONAL SUPERVISOR: SHAUN A. RICE
CALCULATED-DESIGNED BY: JOYCE LOFTUS
CHECKED BY: JEFF JEWETT
REVISED BY
DATE REVISED

LAST REVISION 04-23-10
DATE PLOTTED => 28-JAN-2012
TIME PLOTTED => 06:29

Dist	COUNTY	ROUTE	KILOMETER POST TOTAL PROJECT	SHEET No.	TOTAL SHEETS
01	Men	101	R69.4/R78.9	507	939

Joyce K. Loftus 9-22-11
REGISTERED CIVIL ENGINEER DATE

1-23-12
PLANS APPROVAL DATE

REGISTERED PROFESSIONAL ENGINEER Joyce K. Loftus No. 38426 Exp. 3-31-13 CIVIL STATE OF CALIFORNIA

THE STATE OF CALIFORNIA OR ITS OFFICERS OR AGENTS SHALL NOT BE RESPONSIBLE FOR THE ACCURACY OR COMPLETENESS OF ELECTRONIC COPIES OF THIS PLAN SHEET.

Caltrans Metric

ROADSIDE SIGN QUANTITIES (CONTINUED)

SIGN NUMBER (Sht-No.)	SIGN CODE FEDERAL	SIGN CODE CALIFORNIA	PANEL SIZE (mm)	"C" DIM IN METERS	POST SIZE AND LENGTH 89 X 89	89 X 140	140 X 140	140 X 184	TYPE L Lt	TYPE L Rt	TYPE M Lt	TYPE M Rt	ROADSIDE SIGN ONE POST (EACH)	ROADSIDE SIGN TWO POST (EACH)	REMOVE ROADSIDE SIGN (EACH)	RELOCATE ROADSIDE SIGN (EACH)	INSTALL SIGN (SSBM) (EACH)	INSTALL ROADSIDE SIGN (LWBP) (EACH)	REMARKS
25-21	M3-3	G92 G26-2(101) G44	1219 X 762 711 X 610 610 X 305 533 X 381	0.6													1 1 1 1		
25-22	R1-2		914	2.1													1		
25-23	R1-2		914	2.1	4.3 m								1						
25-24	W11-2 W16-7pL		914 X 914 762 X 457	2.1		5.5 m							1						
25-25		G8	1219 X 914	2.1		4.9 m							1						
25-26	W11-2 W16-7pL		914 X 914 762 X 457	2.1		5.5 m							1						
25-27	R6-1R	SW101	1372 X 457 1372 X 457	1.2		3.7 m							1						
25-28	R1-2		914	2.1													1		
25-29	W11-2 W16-7pL		914 X 914 762 X 457	2.1		5.5 m							1						
25-30	R1-2		914	2.1	4.3 m								1						
25-31	R4-7 OM1-3		610 X 762 457 X 457	1.2	3.7 m								1						
25-32	W11-2 W16-7pL		914 X 914 762 X 457	2.1		5.5 m							1						
25-33	W14-2	G8	1372 X 914 762 X 762	1.8			5.5 m						1						
25-34	R6-1L		1372 X 457	0.5	2.4 m								1						
25-35	R1-2		914	2.1													1		
25-36	R5-1 R5-1a		914 X 914 914 X 610	0.6		3.7 m							1						
25-37	R1-2		914	2.1	4.3 m								1						
25-38	W2-6 W13-1(20)		1219 X 1219 762 X 762	1.2			5.5 m						1						BACK TO BACK
	R5-10c		610 X 305	1.5															
25-39	R5-1 R5-1a		914 X 914 914 X 610	0.6		3.7 m							1						
25-40	R6-1L		1372 X 457	0.5	2.4 m								1						
25-41	R1-2		914	2.1													1		
25-42	W11-2 W16-7pL		914 X 914 762 X 457	2.1		5.5 m							1						
SHEET TOTAL													17	0	0	0	8	0	————

SIGN QUANTITIES

SQ-7

STATE OF CALIFORNIA - DEPARTMENT OF TRANSPORTATION
Caltrans
TRAFFIC

FUNCTIONAL SUPERVISOR: SHAUN A. RICE
CALCULATED-DESIGNED BY: JOYCE LOFTUS
CHECKED BY: JEFF JEWETT
REVISED BY / DATE REVISED

LAST REVISION 04-23-10
DATE PLOTTED => 28-JAN-2012
TIME PLOTTED => 06:29

Dist	COUNTY	ROUTE	KILOMETER POST TOTAL PROJECT	SHEET No.	TOTAL SHEETS
01	Men	101	R69.4/R78.9	508	939

Caltrans Metric

Joyce K. Loftus 9-22-11
REGISTERED CIVIL ENGINEER DATE

1-23-12
PLANS APPROVAL DATE

REGISTERED PROFESSIONAL ENGINEER Joyce K. Loftus No. 38426 Exp. 3-31-13 CIVIL STATE OF CALIFORNIA

THE STATE OF CALIFORNIA OR ITS OFFICERS OR AGENTS SHALL NOT BE RESPONSIBLE FOR THE ACCURACY OR COMPLETENESS OF ELECTRONIC COPIES OF THIS PLAN SHEET.

ROADSIDE SIGN QUANTITIES (CONTINUED)

SIGN NUMBER (Sht-No.)	SIGN CODE FEDERAL	SIGN CODE CALIFORNIA	PANEL SIZE (mm)	"C" DIM IN METERS	POST SIZE AND LENGTH 89 X 89	89 X 140	140 X 140	140 X 184	TYPE L Lt	TYPE L Rt	TYPE M Lt	TYPE M Rt	ROADSIDE SIGN ONE POST (EACH)	ROADSIDE SIGN TWO POST (EACH)	REMOVE ROADSIDE SIGN (EACH)	RELOCATE ROADSIDE SIGN (EACH)	INSTALL SIGN (SSBM) (EACH)	INSTALL ROADSIDE SIGN (LWBP) (EACH)	REMARKS
25-43	R4-7 OM1-3		610 X 762 457 X 457	1.2	3.7 m								1						
25-44	R6-1R	SW101	1372 X 457 1372 X 457	1.2		3.7 m							1						
25-45	R6-1R	SW101	1372 X 457 1372 X 457	1.2		3.7 m							1						
25-46	R6-1R	SW101	1372 X 457 1372 X 457	1.2		3.7 m							1						
25-47	W11-2 W16-7pL		914 X 914 762 X 457	2.1		5.5 m							1						
26-1	R5-1 R5-1a		914 X 914 914 X 610	1.8		4.9 m							1						
26-2	R5-1 R5-1a		914 X 914 914 X 610	1.8		4.9 m							1						
26-3	W4-1R		1219 X 1219	2.1			5.5 m						1						
26-4		SR101 SR102	914 X 762 914 X 305	2.1		4.9 m							1						
26-5	W3-2		1219 X 1219	1.5		4.9 m							1						
26-6	W3-2		914 X 914	1.5		4.3 m							1						
26-7	W2-6 W13-1(20)		914 X 914 762 X 762	1.2		4.9 m							1						
26-8	R2-1(55)		1219 X 1524	2.1			5.5 m						1						
27-1		G84-3	1219 X 1524	2.1			5.5 m						1						"EXIT 573"
27-2		G85-11	3353 X 2591	2.1							7.3 m	7.9 m						1	
27-3		G86-1	3353 X 1372	2.1				5.5 m						1					
27-4		R44B(Mod)	762 X 914	2.1		4.9 m							1						
28-1		W31A(500)	762 X 762	1.5	3.7 m								1						
28-2	OM4-3	W31-2.1	762 X 762 457 X 457	1.2		4.3 m							1						
28-3		R57-1	1219 X 660	2.1		4.3 m							1						
28-4		R58-1	1219 X 660	2.1		4.3 m							1						
28-5	R2-1(55)		1219 X 1524	2.1			5.5 m						1						
SHEET TOTAL													20	1	0	0	0	1	————

SIGN QUANTITIES

SQ-8

REVISED BY | DATE REVISED

JOYCE LOFTUS | JEFF JEWETT

CALCULATED-DESIGNED BY | CHECKED BY

FUNCTIONAL SUPERVISOR: SHAUN A. RICE

STATE OF CALIFORNIA - DEPARTMENT OF TRANSPORTATION

TRAFFIC

Caltrans

LAST REVISION 09-19-11 | DATE PLOTTED => 28-JAN-2012 | TIME PLOTTED => 06:29

Dist	COUNTY	ROUTE	KILOMETER POST TOTAL PROJECT	SHEET No.	TOTAL SHEETS
01	Men	101	R69.4/R78.9	509	939

Caltrans Metric

Joyce K. Loftus 9-22-11
REGISTERED CIVIL ENGINEER DATE

1-23-12
PLANS APPROVAL DATE

REGISTERED PROFESSIONAL ENGINEER Joyce K. Loftus No. 38426 Exp. 3-31-13 CIVIL STATE OF CALIFORNIA

THE STATE OF CALIFORNIA OR ITS OFFICERS OR AGENTS SHALL NOT BE RESPONSIBLE FOR THE ACCURACY OR COMPLETENESS OF ELECTRONIC COPIES OF THIS PLAN SHEET.

ROADSIDE SIGN QUANTITIES (CONTINUED)

SIGN NUMBER (Sht-No.)	SIGN CODE FEDERAL	SIGN CODE CALIFORNIA	PANEL SIZE (mm)	"C" DIM IN METERS	POST SIZE AND LENGTH 89 X 89	89 X 140	140 X 140	140 X 184	TYPE L Lt	TYPE L Rt	TYPE M Lt	TYPE M Rt	ROADSIDE SIGN ONE POST (EACH)	ROADSIDE SIGN TWO POST (EACH)	REMOVE ROADSIDE SIGN (EACH)	RELOCATE ROADSIDE SIGN (EACH)	INSTALL SIGN (SSBM) (EACH)	INSTALL ROADSIDE SIGN (LWBP) (EACH)	REMARKS
29-1		G5	5791 X 2134	2.1					6.7 m	7.9 m								1	
30-1		G5													1				
31-1		G56 G26-2(101)													1				
31-2	M4-5	G78-1 G26-2(101)	1372 X 1067 610 X 305 711 X 610	1.8			5.5 m						1						
31-3		G8-7													1				
31-4	M3-3 M6-3	G26-2(101)													1				
31-5		G28-2(20) G38 G8-1													1 1 1				
31-6		G28-2(20) G38 G8-7	610 X 635 533 X 381 1372 X 1219														1 1 1		SEE NOTE 6 SEE NOTE 6 SEE NOTE 6
31-7	M6-4	G26-2(101)													1 1				
31-8	M3-1 M6-3	G26-2(101)													1				
31-9		G8-1 G36													1				SEE NOTE 7
31-10		G28-2(20) G34(Lt) G8-7	610 X 635 533 X 381 1372 X 1219														1 1 1		SEE NOTE 6 SEE NOTE 6 SEE NOTE 6
31-11		G28-2(20) G38	610 X 635 533 X 381	2.1													1 1		SEE NOTE 8 SEE NOTE 8
31-12	M6-4	G26-2(101)													1 1				
31-13		G28-2(20) G37	610 X 635 533 X 381														1 1		SEE NOTE 6 SEE NOTE 6
SHEET TOTAL													1	0	13	0	10	1	————

SIGN QUANTITIES

SQ-9

STATE OF CALIFORNIA - DEPARTMENT OF TRANSPORTATION
Caltrans
TRAFFIC

FUNCTIONAL SUPERVISOR: SHAUN A. RICE
CALCULATED-DESIGNED BY: JOYCE LOFTUS
CHECKED BY: JEFF JEWETT
REVISED BY
DATE REVISED

LAST REVISION 04-23-10
DATE PLOTTED => 28-JAN-2012
TIME PLOTTED => 06:29

Dist	COUNTY	ROUTE	KILOMETER POST TOTAL PROJECT	SHEET No.	TOTAL SHEETS
01	Men	101	R69.4/R78.9	510	939

Joyce K Loftus 9-22-11
REGISTERED CIVIL ENGINEER DATE

1-23-12
PLANS APPROVAL DATE

REGISTERED PROFESSIONAL ENGINEER Joyce K. Loftus No. 38426 Exp. 3-31-13 CIVIL STATE OF CALIFORNIA

THE STATE OF CALIFORNIA OR ITS OFFICERS OR AGENTS SHALL NOT BE RESPONSIBLE FOR THE ACCURACY OR COMPLETENESS OF ELECTRONIC COPIES OF THIS PLAN SHEET.

ROADSIDE SIGN QUANTITIES (CONTINUED)

SIGN NUMBER (Sht-No.)	SIGN CODE FEDERAL	SIGN CODE CALIFORNIA	PANEL SIZE (mm)	"C" DIM IN METERS	POST SIZE AND LENGTH 89 X 89	89 X 140	140 X 140	140 X 184	TYPE L Lt	TYPE L Rt	TYPE M Lt	TYPE M Rt	ROADSIDE SIGN ONE POST (EACH)	ROADSIDE SIGN TWO POST (EACH)	REMOVE ROADSIDE SIGN (EACH)	RELOCATE ROADSIDE SIGN (EACH)	INSTALL SIGN (SSBM) (EACH)	INSTALL ROADSIDE SIGN (LWBP) (EACH)	REMARKS
32-1		G68													1				
32-2		G49 G28-2(20)	533 X 229 610 X 635	1.2	3.7 m								1						
32-3		G26-2(101) G28-2(20)													1				
32-4		G5													1				
SHEET TOTAL													1	0	3	0	0	0	———
SHEET TOTAL FROM SQ-2													5	0	9	1	0	3	———
SHEET TOTAL FROM SQ-3													13	0	8	0	0	0	———
SHEET TOTAL FROM SQ-4													20	0	3	0	0	1	———
SHEET TOTAL FROM SQ-5													17	4	0	0	1	1	———
SHEET TOTAL FROM SQ-6													19	1	0	0	0	0	———
SHEET TOTAL FROM SQ-7													17	0	0	0	8	0	———
SHEET TOTAL FROM SQ-8													20	1	0	0	0	1	———
SHEET TOTAL FROM SQ-9													1	0	13	0	10	1	———
TOTAL													113	6	36	1	19	7	———

SIGN QUANTITIES

SQ-10

STATE OF CALIFORNIA - DEPARTMENT OF TRANSPORTATION
Caltrans
TRAFFIC

FUNCTIONAL SUPERVISOR: SHAUN A. RICE
CALCULATED-DESIGNED BY: JOYCE LOFTUS
CHECKED BY: JEFF JEWETT
REVISED BY
DATE REVISED

LAST REVISION 09-19-11
DATE PLOTTED => 28-JAN-2012
TIME PLOTTED => 06:29

Dist	COUNTY	ROUTE	KILOMETER POST TOTAL PROJECT	SHEET No.	TOTAL SHEETS
01	Men	101	R69.4/R78.9	511	939

Joyce K Loftus 9-22-11
REGISTERED CIVIL ENGINEER DATE

1-23-12
PLANS APPROVAL DATE

REGISTERED PROFESSIONAL ENGINEER Joyce K. Loftus No. 38426 Exp. 3-31-13 CIVIL STATE OF CALIFORNIA

THE STATE OF CALIFORNIA OR ITS OFFICERS OR AGENTS SHALL NOT BE RESPONSIBLE FOR THE ACCURACY OR COMPLETENESS OF ELECTRONIC COPIES OF THIS PLAN SHEET.

SIGN PANEL QUANTITIES (CONTRACTOR-FURNISHED)

SIGN CODE	SIGN MESSAGE/DESCRIPTION	SIGN SIZE L X D (mm)	SIGN AREA (m^2)	NUMBER OF SIGNS	BACKGROUND SHEETING COLOR	BACKGROUND RETROREFLECTIVE ASTM TYPE	LEGEND SHEETING COLOR	LEGEND RETROREFLECTIVE ASTM TYPE	PROTECTIVE OVERLAY PREMIUM FILM	FURNISH SINGLE SHEET ALUMINUM SIGN UNFRAMED 1.6 mm (m^2)	UNFRAMED 2.0 mm (m^2)	FRAMED 1.6 mm (m^2)	FRAMED 2.0 mm (m^2)	FURNISH LAMINATED PANEL SIGN (25.4 mm-TYPE A) (m^2)	FURNISH LAMINATED PANEL SIGN (25.4 mm-TYPE B) (m^2)	FURNISH LAMINATED PANEL SIGN (63.5 mm-TYPE B) (m^2)
D1-2	DESTINATION	914 X 610	0.56	1	YELLOW	III	BLACK		X	0.56						
G11-2<CA>	BRIDGE NAME	914 X 533	0.49	1	WHITE	III	BLACK		X	0.49						
G83-5<CA>	SEE OH SIGN NO. CS-48	6706 X 2540	17.03	1	GREEN	III	WHITE	III	X					17.03		
G26-2(101)<CA>	U. S. ROUTE MARKER	711 X 610	0.43	9	WHITE	III	BLACK		X	3.87						
G28-2(20)<CA>	STATE ROUTE MARKER	610 X 635	0.39	5	GREEN	III	WHITE	III	X	1.95						
G34(L+)<CA>	DIRECTIONAL ARROW AUXILIARY	533 X 381	0.20	1	GREEN	III	WHITE	III	X	0.20						
G37<CA>	DIRECTIONAL ARROW AUXILIARY	533 X 381	0.20	1	GREEN	III	WHITE	III	X	0.20						
G38<CA>	DIRECTIONAL ARROW AUXILIARY	533 X 381	0.20	2	GREEN	III	WHITE	III	X	0.40						
G43<CA>	DIRECTIONAL ARROW AUXILIARY	533 X 381	0.20	4	WHITE	III	BLACK		X	0.80						
G44<CA>	DIRECTIONAL ARROW AUXILIARY	533 X 381	0.20	4	WHITE	III	BLACK		X	0.80						
G49<CA>	EAST	533 X 229	0.12	1	GREEN	III	WHITE	III	X	0.12						
G5<CA>	DISTANCE / DESTINATION	5791 X 2134	12.36	2	GREEN	III	WHITE	III	X							24.72
G68-1(1 MILE)<CA>	DIVIDED ROAD 1 MILE AHEAD	2896 X 1524	4.41	1	GREEN	III	WHITE	III	X				4.41			
G78-1<CA>	INTERCHANGE GUIDE	1372 X 1067	1.46	1	GREEN	III	WHITE	III	X		1.46					
G8<CA>	DESTINATION/STREET NAME	1219 X 914	1.12	2	GREEN	III	WHITE	III	X		2.24					
G8<CA>	DESTINATION/STREET NAME	1372 X 914	1.25	1	GREEN	III	WHITE	III	X		1.25					
G84-3<CA>	EXIT WITH ARROW	1219 X 1524	1.86	4	GREEN	III	WHITE	III	X		7.44					
G85<CA>	EXIT DIRECTION	3962 x 2743	10.87	1	GREEN	III	WHITE	III	X						10.87	
G85<CA>	EXIT DIRECTION	4267 X 2743	11.70	1	GREEN	III	WHITE	III	X						11.70	
G85-11<CA>	EXIT DIRECTION	3353 X 2591	8.69	2	GREEN	III	WHITE	III	X				17.38			
G86<CA>	SUPPLEMENTAL DESTINATION	3353 X 2438	8.17	1	GREEN	III	WHITE	III	X				8.17			
G86-1<CA>	SUPPLEMENTAL DESTINATION	2743 X 1372	3.76	1	GREEN	III	WHITE	III	X				3.76			
G86-1<CA>	SUPPLEMENTAL DESTINATION	3353 X 1372	4.60	1	GREEN	III	WHITE	III	X				4.60			
G8-7<CA>	DESTINATION/STREET NAME	1372 X 1219	1.67	2	GREEN	III	WHITE	III	X		3.34					
G92<CA>	FREEWAY ENTRANCE	1219 X 762	0.93	8	GREEN	III	WHITE	III	X		7.44					
M3-1	NORTH	610 X 305	0.19	4	WHITE	III	BLACK		X	0.76						
M3-3	SOUTH	610 X 305	0.19	4	WHITE	III	BLACK		X	0.76						
M4-5	TO	610 X 305	0.19	1	WHITE	III	BLACK		X	0.19						
OM1-3	OBJECT MARKER	457 X 457	0.21	3	YELLOW	III			X	0.63						
OM4-3	OBJECT MARKER	457 X 457	0.21	1	RED	III			X	0.21						
									SHEET TOTAL	11.94	23.17	0	38.32	17.03	22.57	24.72

L = LENGTH OF SIGN
D = DEPTH OF SIGN

NOTES:

1. CALIFORNIA SIGN CODES ARE DESIGNATED BY <CA>. OTHERWISE, FEDERAL SIGN CODES ARE SHOWN.
2. FOR "SIGN MESSAGE/DESCRIPTION" INFORMATION FOR THE OVERHEAD PANEL, SEE SIGN PLANS.

SIGN QUANTITIES

SQ-11

STATE OF CALIFORNIA - DEPARTMENT OF TRANSPORTATION
Caltrans
TRAFFIC

FUNCTIONAL SUPERVISOR: SHAUN A. RICE
CALCULATED-DESIGNED BY: JOYCE LOFTUS
CHECKED BY: JEFF JEWETT
REVISED BY / DATE REVISED

LAST REVISION 09-19-11 DATE PLOTTED => 28-JAN-2012 TIME PLOTTED => 06:29

Dist	COUNTY	ROUTE	KILOMETER POST TOTAL PROJECT	SHEET No.	TOTAL SHEETS
01	Men	101	R69.4/R78.9	512	939

Caltrans Metric

Joyce K Loftus 9-22-11
REGISTERED CIVIL ENGINEER DATE

1-23-12
PLANS APPROVAL DATE

REGISTERED PROFESSIONAL ENGINEER Joyce K. Loftus No. 38426 Exp. 3-31-13 CIVIL STATE OF CALIFORNIA

THE STATE OF CALIFORNIA OR ITS OFFICERS OR AGENTS SHALL NOT BE RESPONSIBLE FOR THE ACCURACY OR COMPLETENESS OF ELECTRONIC COPIES OF THIS PLAN SHEET.

SIGN PANEL QUANTITIES (CONTRACTOR-FURNISHED) (CONTINUED)

SIGN CODE	SIGN MESSAGE/DESCRIPTION	SIGN SIZE L X D (mm)	SIGN AREA (m^2)	NUMBER OF SIGNS	BACKGROUND SHEETING COLOR	BACKGROUND RETROREFLECTIVE ASTM TYPE	LEGEND SHEETING COLOR	LEGEND RETROREFLECTIVE ASTM TYPE	PROTECTIVE OVERLAY PREMIUM FILM	FURNISH SINGLE SHEET ALUMINUM SIGN UNFRAMED 1.6 mm (m^2)	UNFRAMED 2.0 mm (m^2)	FRAMED 1.6 mm (m^2)	FRAMED 2.0 mm (m^2)	FURNISH LAMINATED PANEL SIGN (25.4 mm-TYPE A) (m^2)	FURNISH LAMINATED PANEL SIGN (25.4 mm-TYPE B) (m^2)	FURNISH LAMINATED PANEL SIGN (63.5 mm-TYPE B) (m^2)
R1-1	STOP	762	0.48	3	RED	IX	WHITE	IX	X	1.44						
R11<CA>	DO NOT ENTER	1829 X 1829	3.35	2	RED	IX	WHITE	IX	X			6.70				
R11A-2<CA>	WRONG WAY	1829 X 533	0.98	2	RED	IX	WHITE	IX	X			1.96				
R1-2	YIELD	914	0.36	8	RED	IX	WHITE	IX	X	2.88						
R2-1(55)	SPEED LIMIT	1219 X 1524	1.86	4	WHITE	III	BLACK		X		7.44					
R2-1(65)	SPEED LIMIT	1219 X 1524	1.86	2	WHITE	III	BLACK		X		3.72					
R3-1	NO RIGHT TURN	610 X 610	0.37	3	WHITE BLACK	IX	RED BLACK	IX	X	1.11						
R4-1	DO NOT PASS	914 X 1219	1.12	1	WHITE	III	BLACK		X	1.12						
R4-3	SLOWER TRAFFIC KEEP RIGHT	1219 X 1524	1.86	1	WHITE	III	BLACK		X		1.86					
R44B(Mod)<CA>	PEDESTRIANS MOTOR DRIVEN CYCLES MUST EXIT	762 X 914	0.70	2	WHITE	IX	BLACK		X	1.40						
R4-7	KEEP RIGHT	1219 X 1524	1.86	1	WHITE	III	BLACK		X		1.86					
R4-7	KEEP RIGHT	610 X 762	0.47	3	WHITE	III	BLACK		X	1.41						
R48-1<CA>	RADAR ENFORCED	914 X 457	0.42	1	WHITE	III	BLACK		X	0.42						
R5-1	DO NOT ENTER	914 X 914	0.84	12	RED	IX	WHITE	IX	X	10.08						
R5-10c	PEDESTRIANS PROHIBITED	610 X 305	0.19	4	WHITE	IX	BLACK		X	0.76						
R5-1a	WRONG WAY	914 X 610	0.56	12	RED	IX	WHITE	IX	X	6.72						
R57-1<CA>	BEGIN FREEWAY	1219 X 660	0.81	1	WHITE	IX	BLACK		X		0.81					
R58-1<CA>	END FREEWAY	1219 X 660	0.81	1	WHITE	IX	BLACK		X		0.81					
R6-1L	ONE WAY	1372 X 457	0.63	8	WHITE	III	BLACK		X		5.04					
R6-1R	ONE WAY	1372 X 457	0.63	10	WHITE	III	BLACK		X		6.30					
R6-3<CA>	TRUCKS, 3 AXLES OR MORE 55 MAXIMUM	1219 X 1524	1.86	2	WHITE	III	BLACK		X		3.72					
R6-4<CA>	ALL VEHICLES WHEN TOWING 55 MAXIMUM	1219 X 1524	1.86	2	WHITE	III	BLACK		X		3.72					
SR101<CA>	PEDESTRIANS MOTOR-DRIVEN CYCLES PROHIBITED	914 X 762	0.70	6	WHITE	IX	BLACK		X	4.20						
SR102<CA>	BICYCLES OK	914 X 305	0.28	6	WHITE	IX	BLACK		X	1.68						
									SHEET TOTAL	33.22	35.28	8.66	0	0	0	0

SIGN QUANTITIES

SQ-12

STATE OF CALIFORNIA - DEPARTMENT OF TRANSPORTATION
Caltrans
TRAFFIC

FUNCTIONAL SUPERVISOR: SHAUN A. RICE
CALCULATED-DESIGNED BY: JOYCE LOFTUS
CHECKED BY: JEFF JEWETT
REVISED BY
DATE REVISED

LAST REVISION 06-07-10 | DATE PLOTTED => 28-JAN-2012 | TIME PLOTTED => 06:30

Dist	COUNTY	ROUTE	KILOMETER POST TOTAL PROJECT	SHEET No.	TOTAL SHEETS
01	Men	101	R69.4/R78.9	513	939

Joyce K. Loftus 9-22-11
REGISTERED CIVIL ENGINEER DATE

1-23-12
PLANS APPROVAL DATE

REGISTERED PROFESSIONAL ENGINEER Joyce K. Loftus No. 38426 Exp. 3-31-13 CIVIL STATE OF CALIFORNIA

THE STATE OF CALIFORNIA OR ITS OFFICERS OR AGENTS SHALL NOT BE RESPONSIBLE FOR THE ACCURACY OR COMPLETENESS OF ELECTRONIC COPIES OF THIS PLAN SHEET.

Caltrans Metric

SIGN PANEL QUANTITIES (CONTRACTOR-FURNISHED) (CONTINUED)

SIGN CODE	SIGN MESSAGE/DESCRIPTION	SIGN SIZE L X D (mm)	SIGN AREA (m^2)	NUMBER OF SIGNS	BACKGROUND SHEETING COLOR	BACKGROUND RETROREFLECTIVE ASTM TYPE	LEGEND SHEETING COLOR	LEGEND RETROREFLECTIVE ASTM TYPE	PROTECTIVE OVERLAY PREMIUM FILM	FURNISH SINGLE SHEET ALUMINUM SIGN UNFRAMED 1.6 mm (m^2)	FURNISH SINGLE SHEET ALUMINUM SIGN UNFRAMED 2.0 mm (m^2)	FURNISH SINGLE SHEET ALUMINUM SIGN FRAMED 1.6 mm (m^2)	FURNISH SINGLE SHEET ALUMINUM SIGN FRAMED 2.0 mm (m^2)	FURNISH LAMINATED PANEL SIGN (25.4 mm-TYPE A) (m^2)	FURNISH LAMINATED PANEL SIGN (25.4 mm-TYPE B) (m^2)	FURNISH LAMINATED PANEL SIGN (63.5 mm-TYPE B) (m^2)
SW101<CA>	CHEVRONS	1372 X 457	0.63	4	YELLOW	III	BLACK		X		2.52					
W11-2	PEDESTRIAN CROSSING	914 X 914	0.84	8	YELLOW	III	BLACK		X	6.72						
W13-1(20)	ADVISORY SPEED PLAQUE	762 X 762	0.58	4	YELLOW	III	BLACK		X	2.32						
W14-2	NO OUTLET	762 X 762	0.58	1	YELLOW	III	BLACK		X	0.58						
W16-7pL	DIRECTIONAL ARROW	762 X 457	0.35	8	YELLOW	III	BLACK		X	2.80						
W2-2L	INTERSECTION SYMBOL	914 X 914	0.84	1	YELLOW	III	BLACK		X	0.84						
W2-6	CIRCULAR INTERSECTION	1219 X 1219	1.49	1	YELLOW	III	BLACK		X		1.49					
W2-6	CIRCULAR INTERSECTION	914 X 914	0.84	3	YELLOW	III	BLACK		X	2.52						
W3-1	STOP AHEAD	1219 X 1219	1.49	3	YELLOW	IX	BLACK		X		4.47					
							RED,WHITE	IX								
W31-2.1<CA>	END	762 X 762	0.58	1	YELLOW	III	BLACK		X	0.58						
W31A(500)<CA>	ROAD ENDS 500 FT	762 X 762	0.58	1	YELLOW	III	BLACK		X	0.58						
W3-2	YIELD AHEAD	1219 X 1219	1.49	1	YELLOW	IX	BLACK		X		1.49					
							RED,WHITE	IX								
W3-2	YIELD AHEAD	914 X 914	0.84	3	YELLOW	IX	BLACK		X	2.52						
							RED,WHITE	IX								
W4-1R	MERGE	1219 X 1219	1.49	4	YELLOW	IX	BLACK		X		5.96					
W4-2R	PAVEMENT TRANSITION SYMBOL	1219 X 1219	1.49	2	YELLOW	IX	BLACK		X		2.98					
W6-1	DIVIDED HIGHWAY BEGINS	1219 X 1219	1.49	1	YELLOW	III	BLACK		X		1.49					
W6-2	DIVIDED HIGHWAY ENDS	1219 X 1219	1.49	2	YELLOW	III	BLACK		X		2.98					
W6-3	TWO-WAY TRAFFIC	1219 X 1219	1.49	1	YELLOW	III	BLACK		X		1.49					
W69-1.1<CA>	END FREEWAY ½ MILE	1219 X 914	1.12	1	YELLOW	III	BLACK		X		1.12					
W9-1R	RIGHT LANE ENDS	1219 X 1219	1.49	1	YELLOW	III	BLACK		X		1.49					
									SHEET TOTAL	19.46	27.48	0	0	0	0	0
									SHEET TOTAL FROM SQ-11	11.94	23.17	0	38.32	17.03	22.57	24.72
									SHEET TOTAL FROM SQ-12	33.22	35.28	8.66	0	0	0	0
									TOTAL	64.62	85.93	8.66	38.32	17.03	22.57	24.72

SIGN QUANTITIES

SQ-13

STATE OF CALIFORNIA - DEPARTMENT OF TRANSPORTATION
Caltrans
TRAFFIC

FUNCTIONAL SUPERVISOR SHAUN A. RICE
CALCULATED-DESIGNED BY JOYCE LOFTUS
CHECKED BY JEFF JEWETT
REVISED BY
DATE REVISED

LAST REVISION 09-19-11
DATE PLOTTED => 28-JAN-2012
TIME PLOTTED => 06:30

Dist	COUNTY	ROUTE	KILOMETER POST TOTAL PROJECT	SHEET No.	TOTAL SHEETS
01	Men	101	R69.4/R78.9	514	939

Mitch Andrus 9-22-11
REGISTERED CIVIL ENGINEER DATE

1-23-12
PLANS APPROVAL DATE

REGISTERED PROFESSIONAL ENGINEER MITCH ANDRUS No. C48753 Exp. 9-30-12 CIVIL STATE OF CALIFORNIA

THE STATE OF CALIFORNIA OR ITS OFFICERS OR AGENTS SHALL NOT BE RESPONSIBLE FOR THE ACCURACY OR COMPLETENESS OF ELECTRONIC COPIES OF THIS PLAN SHEET.

Caltrans Metric

EARTHWORK SUMMARY

STATION TO STATION		ROADWAY EXCAVATION (m^3)	ROADWAY EMBANKMENT (N) (m^3)	IMPORTED BORROW (m^3)
"A" 96+00.000	"A" 111+80.000	125000	65500	
"AS" 40+00.000	"AS" 52+26.724	13501	33676	
"AN" 30+00.000	"AN" 42+71.106	8267	25309	
"A" 124+00.000	"A" 150+24.216	21389	245375	
"W" 150+88.346	"W" 172+91.903	1666	191535	
"NW1" 172+91.903	"NW1" 177+43.754	0	197097	
"W" 177+40.000	"W" 180+20.000	0	135749	
"NW2" 180+20.000	"NW2" 190+70.000	2627	60304	
"U1" 99+48.581	"U1" 105+82.478	241347	33	
"U2" 100+80.000	"U2" 105+66.883	51280	8874	
"U3" 106+73.943	"U3" 110+30.000	24130	12913	
"U4" 105+43.196	"U4" 110+50.000	3982	7059	
"H" 96+50.510	"H" 101+84.915	58721	676	
"QM1" 173+39.985	"QM1" 177+44.360	68	98503	
"QM2" 173+40.000	"QM2" 178+25.248	333	86368	
"QM3" 182+00.000	"QM3" 178+91.264	0	27678	
"QM4" 178+19.128	"QM4" 182+99.268	0	31650	
"B" 9+66.000	"B" 11+10.950	0	9750	
"F" 12+00.000	"F" 20+10.448[a]	1025	461	
"BERM1" 10+16.000	"BERM1" 10+72.000	15	661	
"DW9" 10+05.400	"DW9" 10+10.483	0	2	
"DW10" 10+01.800	"DW10" 10+47.040	46	6	
	SUB TOTAL(1):	553397	1239180	
LOCATION				
ROUNDABOUT		0	43588	
"U1" GORE		61	0	
"U2" GORE		49	0	
"U3" GORE		39	0	
"U4" GORE		59	0	
"QM1" GORE		35	0	
"QM2" GORE		67	0	
"QM3" GORE		50	0	
"QM4" GORE		26	0	
STABILIZATION TRENCH SYSTEM "U3"[b]		4596	0	
STAGE CONSTRUCTION		434	0	
"D" LINE WETLAND REHAB WORK RT "D" 20+20.00 TO "D" 23+80.00 (SEE C-46 & C-47)		32900	0	
LOCAL TOPSOIL[c]		70000	38000	
CONTOUR GRADING QUANTITIES NOT REFLECTED ABOVE[d]	AHU3	7697	0	
	AHU2	2361	0	
	AHU1	44094	0	
	DB-7[e]	2528	0	
	WBQM1	0	1835	
	WBQM2	0	643	
	WBQM3	0	1033	
	WBQM4	0	23	
	SUB TOTAL(2):	164996	85122	
	TOTAL	718393	1324302	740452[f]

(N) NOT A SEPERATE PAY ITEM, FOR INFORMATION ONLY
a INCLUDES "DW6", "DW7", "DW8" & CUL-DE-SAC
b SEE C-10 FOR STABILIZATION TRENCH SYSTEM DETAILS.
c SEE C-51 TO C-81 FOR DETAILS.
d SEE G-1 FOR LOCATIONS.
e SEE D-27 FOR DETAILS.
f INCLUDES GRADING FACTOR OF 0.9.

REMOVE ASPHALT CONCRETE SURFACING

1340 m^2

SEE SC-31 FOR DETAILS.

REMOVE BASE AND SURFACING

1180 m^2

SEE C-21 TO C-23 & C-26 FOR DETAILS.

FILTER FABRIC

DESCRIPTION	QTY (m^2)	NOTES
LANDSCAPE DESIGN	528	SEE LD-5 FOR QUANTITY.
SLOPE STABILIZATION	1234	SEE Q-7 FOR QUANTITY.
POND RELOCATION	5568	SEE THIS SHEET FOR QUANTITY.
TOTAL	7330	

ROADWAY EXCAVATION (TYPE DC)

310 m^3

ROADWAY QUANTITIES SUMMARY

STATION TO STATION		CLASS 2 AGGREGATE BASE (m^3)	HOT MIX ASPHALT (TONNE)	RUBBERIZED HOT MIX ASPHALT (GAP GRADED) (TONNE)	RUBBERIZED HOT MIX ASPHALT (OPEN GRADED) (TONNE)	GEOSYNTHETIC PAVEMENT INTERLAYER (m^2)	PAVING ASHPHALT BINDER, GPI (TONNE)	TACK COAT (TONNE)
"A" 96+00.000	"A" 111+80.000	14463	3144	6667	2258	13419	15.2	45.6
"AS" 40+00.000	"AS" 52+26.724	9885	2149	2149	1075	0	0	19.0
"AN" 30+00.000	"AN" 42+71.106	7333	1594	1594	797	0	0	14.1
"A" 124+00.000	"A" 148+67.750	19437	8726	8726	4363	0	0	77.1
"W" 150+88.346	"W" 172+91.903	4639	1009	1009	505	0	0	9.0
"NW1" 172+91.903	"NW1" 177+43.754	3915	852	852	426	0	0	7.6
"W" 177+40.000	"W" 180+20.000	1480	322	322	161	0	0	2.9
"NW2" 180+20.000	"NW2" 190+70.000	8576	1865	2305	1059	1679	1.9	18.7
"U1" 99+48.581	"U1" 105+82.478	3144[a]	675	728[e]	202	33	0.1	6.1
"U2" 100+80.000	"U2" 105+66.883	2388[a]	512	550[e]	155	7	0.1	4.6
"U3" 106+73.943	"U3" 110+30.000	1523[a]	326	354[e]	163	0	0	2.9
"U4" 105+43.196	"U4" 110+50.000	2723[a]	381	627[e]	292	0	0	5.2
"H" 96+49.920	"H" 101+46.614	3300	728	952	423	853	1.0	7.6
"QM1" 173+39.985	"QM1" 177+43.484	1878[a]	404	429[e]	202	0	0	3.6
"QM2" 173+40.000	"QM2" 178+25.248	2409[a]	514	564[e]	257	0	0	4.6
"QM3" 181+92.763	"QM3" 178+91.264	1256[a]	266	303[e]	133	0	0	2.4
"QM4" 178+19.128	"QM4" 182+39.963	1769[a]	381	401[e]	191	0	0	3.4
"B" 9+66.000	"B" 11+44.307	899	257	252	108	0	0	2.3
"F" 12+00.000	"F" 20+10.448[b]	1735	1410	1410	708	6881	7.8	12.5
"DW9" 10+05.400	"DW9" 10+10.483	6	0	7	0	0	0	0
"DW10" 10+01.800	"DW10" 10+47.040	29	0	31	0	0	0	0
"CV" 8+90.000	"CV" 11+30.000	0	0	211	0	1402	1.6	0
	SUB TOTAL(1):	92787	25515	30443	13478	24274	27.7	249.2
ROUNDABOUT[c]		3000	609	0	254	0	0	0
STAGE CONSTRUCTION		482	625	0	0	0	0	0
HMA DIKE(TYPE C, TYPE E AND TYPE F)[d]		0	119	0	0	0	0	0
PLACE HMA (MISCELLANEOUS AREA)[d]		0	121	0	0	0	0	0
	SUB TOTAL(2):	3482	1474	0	254	0	0	0
	TOTAL:	96269	26989	30443	13732	24274	27.7	249.2

a INCLUDES STAMPED ASPHALT CI 2 AB QUANTITY.
b INCLUDES "DW6", "DW7", "DW8" & CUL-DE-SAC.
c SEE SHEETS C-14 THROUGH C-42 FOR DETAILS.
d SEE Q-3 FOR QUANTITY TABLES.
e INCLUDES STAMPED ASPHALT HMA QUANTITY. SEE STAMPED ASPHALT TABLE BELOW.

STAMPED ASPHALT

SHEET	DESCRIPTION	QUANTITY (m^2)	QUANTITY (TONN)*
L-3	"U1" GORE	302	37.7
L-3	"U2" GORE	241	30.1
L-8	"U3" GORE	191	23.8
L-8	"U4" GORE	294	36.7
L-28	"QM1" GORE	171	21.3
L-28	"QM2" GORE	333	41.6
L-32	"QM3" GORE	249	31.0
L-32	"QM4" GORE	131	16.3
	TOTAL:	1912	238.5

*INCLUDED IN ROADWAY QUANTITIES SUMMARY. SEE THIS SHEET.

POND RELOCATION+

REMOVE UNSUITABLE MATERIAL	CLASS 3 PERMEABLE MATERIAL	FILTER FABRIC*
1600 m^3	3216 m^3	5568 m^2

+ SEE L-18 AND G-12 FOR POND RELOCATION DETAILS.
* SEE TOTAL THIS SHEET

ROCK BLANKET

ROUNDABOUT	QUANTITY (m^2)
LEG A-B	219
LEG C	105
LEG D	103
LEG F-E	164
LEG H-G	161
CENTRAL ISLAND	226
TOTAL:	978

SEE SHEETS C-14 TO C-42 FOR DETAILS.

SUMMARY OF QUANTITIES

Q-1

STATE OF CALIFORNIA - DEPARTMENT OF TRANSPORTATION
Caltrans 03-DESIGN EAST

FUNCTIONAL SUPERVISOR: DOUGLAS S. JONES
CALCULATED-DESIGNED BY
CHECKED BY
REVISED BY
DATE REVISED

LAST REVISION 11-15-11
DATE PLOTTED => 02-APR-2012
TIME PLOTTED => 11:15

Dist	COUNTY	ROUTE	KILOMETER POST TOTAL PROJECT	SHEET No.	TOTAL SHEETS
01	Men	101	R69.4/R78.9	515	939

Mitch Andrus 9-22-11
REGISTERED CIVIL ENGINEER DATE

1-23-12
PLANS APPROVAL DATE

REGISTERED PROFESSIONAL ENGINEER MITCH ANDRUS No. C48753 Exp. 9-30-12 CIVIL STATE OF CALIFORNIA

THE STATE OF CALIFORNIA OR ITS OFFICERS OR AGENTS SHALL NOT BE RESPONSIBLE FOR THE ACCURACY OR COMPLETENESS OF ELECTRONIC COPIES OF THIS PLAN SHEET.

Caltrans Metric

METAL BEAM GUARD RAILING

STATION TO STATION						MBGR (WOOD POST) (m)	END ANCHOR ASSEMBLY (TYPE SFT) (EA)	ALTERNATIVE FLARED TERMINAL SYSTEM (EA)	TRANSITION RAILING (TYPE WB) (EA)	WEED CONTROL MAT (FIBER) (m^2)	CRASH CUSHION (TYPE CAT) (EA)	CRASH CUSHION (TYPE CAT) BACKUP (EA)	DOUBLE MBGR (WOOD POST) (m)	END CAP (TYPE A) (EA)
RT	"A" NB	97+10.50	RT	"A" NB	97+33.33	11.40	1	1		39				
LT	"A" SB	97+16.50	LT	"A" SB	97+77.33	49.40	1	1		179*				
RT	"A" NB	102+85.49	RT	"A" NB	105+70.52	266.00		1	1	318				
LT	"A" NB	105+20.00	LT	"A" NB	105+78.90	7.60			1	170	1	1	30.40	
LT	"H"	96+49.92	LT	"H"	97+75.35	106.40		1	1	162				
RT	"H"	96+53.35	RT	"H"	96+83.78	11.40		1	1	57				
LT	"H"	100+56.22	LT	"U4"	105+64.62	22.80		1	1	61				
RT	"U4"	105+64.61	LT	"H"	101+40.00	34.20		1	1	66				
RT	"A" NB	106+29.41	RT	"A" NB	107+03.38	66.40			1	89				1
LT	"A" NB	106+55.86	LT	"A" NB	107+03.38	7.60			1	118	1	1	26.60	
RT	"A" SB	106+47.90	RT	"A" SB	107+06.80	7.60			1	169	1	1	30.40	
LT	"A" SB	106+56.28	LT	"A" SB	107+30.52	66.70			1	83				1
RT	"A" SB	107+82.76	RT	"A" SB	108+41.66	7.60			1	169	1	1	30.40	
LT	"A" SB	107+96.56	LT	"A" SB	108+53.59	38.00		1	1	79				
LT	"U3"	108+39.23	LT	"U3"	108+73.46	15.20		1	1	50				
RT	"U3"	108+31.77	RT	"U3"	108+50.80	0.00		1	1	49				
RT	"U4"	106+63.00	RT	"U4"	107+20.03	45.60		1	1	257*				
LT	"AS"	50+66.48	LT	"A"	125+59.99	300.20		1	1	358				
RT	"A"	125+30.26	RT	"A"	125+56.89	7.60		1	1	58				
RT	"A"	126+14.39	RT	"A"	126+33.42	0.00		1	1	46				
LT	"A"	126+19.19	LT	"A"	128+63.00	224.30		1	1	343				
RT	"A"	133+80.96	RT	"A"	134+07.59	7.60		1	1	40				
LT	"A"	133+88.65	LT	"A"	134+07.68	0.00		1	1	44				
RT	"A"	134+71.87	RT	"A"	134+90.90	0.00		1	1	36				
LT	"A"	134+68.89	LT	"A"	134+96.83	15.20		1	1	59				
LT	"A"	145+92.00	LT	"A"	146+00.00	0.00		1	1	20				
LT	"A"	147+10.00	LT	"A"	148+70.20	144.00			2	161				
RT	"A"	148+43.57	RT	"A"	148+70.20	7.60		1	1	49				
LT	"W"	167+76.55	LT	"W"	171+49.13	357.20			2	402				
RT	"W"	167+76.55	RT	"W"	167+95.58	0.00		1	1	41				
RT	"W"	171+42.66	RT	"W"	171+61.69	0.00		1	1	37				
LT	"W"	172+35.10	LT	"QM1"	177+32.93	478.80		1	1	547				
RT	"W"	172+49.03	RT	"W"	172+68.06	0.00		1	1	540				
LT	"NW1"	175+85.31	LT	"W"	177+79.19	178.60		1	1	229				
RT	"W"	177+56.45	RT	"W"	177+83.08	7.60		1	1	43				
LT	"W"	178+28.77	LT	"W"	179+30.85	86.90			2	111				
RT	"W"	178+33.10	RT	"W"	178+52.13	0.00		1	1	38				
RT	"W"	179+09.32	RT	"W"	179+35.95	7.60		1	1	41				
LT	"QM4"	179+34.18	LT	"QM4"	179+53.21	0.00		1	1	45				
RT	"QM4"	179+34.02	RT	"QM4"	179+53.05	0.00		1	1	36				
LT	"QM3"	179+42.51	LT	"NW2"	182+51.61	288.80		1	1	346				
RT	"QM3"	179+48.55	RT	"QM3"	179+67.58	0.00		1	1	41				
LT	"W"	179+73.74	LT	"W"	180+00.37	7.60		1	1	57				
RT	"W"	179+81.33	RT	"W"	180+00.36	0.00		1	1	37				
LT	"NW2"	185+02.00	LT	"NW2"	180+85.66	60.80		2		294*				
RT	"NW2"	185+28.00	RT	"NW2"	185+92.66	41.80		2		224*				
	** ONE AND TWO POST WEED CONTROL									163**				
					TOTAL	2986.10	2	39	45	6601	4	4	117.80	2

* INCLUDES WEED CONTROL MAT (FIBER) AROUND ELECTRICAL CABINETS. SEE E-1 TO E-14.
** SEE SHEETS PD-1 TO PD-32 FOR SIGN POST LOCATIONS.

REMOVE CATTLE GUARD

SHEET	DESCRIPTION	QUANTITY (EA)
L-9	RT "AN" 30+71	1
L-9	LT "AS" 41+05	1
	TOTAL:	2

METAL CATTLE GUARD (7.2 M)

SHEET	DESCRIPTION	QUANTITY (EA)
L-5	"H" 101+44	1
	TOTAL:	1

ABANDON WATER WELL

SHEET	DESCRIPTION	QUANTITY (EA)
L-31	34 LT "W" 178+22.00	1
L-30	26 LT "W" 178+37.00	1
L-30	11 LT "W" 178+39.50	1
	TOTAL:	3

REMOVE METAL BEAM GUARD RAILING

STATION TO STATION						QUANTITY (m)
RT	"A"	101+46.76	RT	"A"	103+43.90	199
LT	"H"	96+49.92	LT	"H"	98+04.04	155
RT	"H"	96+53.35	RT	"H"	96+78.87	26
RT	"F"	16+80.00	RT	"F"	17+25.00	45
					TOTAL:	425

CLEARING AND GRUBBING

65 HA

IMPORTED MATERIAL (SHOULDER BACKING)

STATION TO STATION					(N) (M^3)	QUANTITY (TONNE)
OVERLAY	"A" SB	LT SHLD	96+00.00	97+16.50	6.12	15.29
OVERLAY + DIKE(TYPE F)	"A" SB	LT SHLD	97+16.50	97+66.00	5.07	12.68
OVERLAY + DIKE(TYPE C)	"A" SB	LT SHLD	97+66.00	97+85.00	1.47	3.68
OVERLAY	"A" SB	LT SHLD	97+85.00	99+40.00	8.14	20.34
OVERLAY	"A" SB	RT SHLD	96+00.00	99+00.00	15.75	39.38
OVERLAY	"A" NB	LT SHLD	96+00.00	100+80.00	25.20	63.00
OVERLAY	"A" NB	RT SHLD	96+00.00	97+02.50	5.38	13.45
OVERLAY + DIKE(TYPE C)	"A" NB	RT SHLD	97+02.50	97+22.00	1.51	3.78
OVERLAY + DIKE(TYPE F)	"A" NB	RT SHLD	97+22.00	97+33.33	1.16	2.90
OVERLAY	"A" NB	RT SHLD	97+22.00	97+33.33	18.20	45.50
OVERLAY + DIKE(TYPE F)	"H"	LT SHLD	96+49.92	97+23.00	7.49	18.73
OVERLAY + DIKE(TYPE F)	"H"	RT SHLD	96+53.35	96+72.00	1.91	4.78
OVERLAY + DIKE(TYPE C)	"H"	RT SHLD	96+72.00	96+92.00	1.55	3.88
OVERLAY	"H"	RT SHLD	96+92.00	97+23.00	1.63	4.07
OVERLAY	"CV"	LT SHLD	8+90.00	11+30.00	5.40	13.50
OVERLAY	"CV"	RT SHLD	8+90.00	11+30.00	5.40	13.50
OVERLAY	"F"	LT SHLD	12+00.00	18+50.00	34.13	85.31
OVERLAY	"F"	RT SHLD	12+00.00	18+50.00	34.13	85.31
				TOTAL:	179.64	449.08

(N) NOT A SEPARATE PAY ITEM, FOR INFORMATION ONLY.

3.0 M WIRE MESH GATE

SHEET	DESCRIPTION	QUANTITY (EA)
L-30	"B" 11+00	2
	TOTAL:	2

3.7 M WIRE MESH GATE

SHEET	DESCRIPTION	QUANTITY (EA)
L-5	"H" 101+44	2
	TOTAL:	2

SUMMARY OF QUANTITIES

Q-2

STATE OF CALIFORNIA - DEPARTMENT OF TRANSPORTATION
Caltrans 03-DESIGN EAST
FUNCTIONAL SUPERVISOR DOUGLAS S. JONES
CALCULATED-DESIGNED BY
CHECKED BY
REVISED BY
DATE REVISED

LAST REVISION 11-29-11 DATE PLOTTED => 02-APR-2012 TIME PLOTTED => 11:15

Dist	COUNTY	ROUTE	KILOMETER POST TOTAL PROJECT	SHEET No.	TOTAL SHEETS
01	Men	101	R69.4/R78.9	516	939

Mitch Andrus 9-22-11
REGISTERED CIVIL ENGINEER DATE

1-23-12
PLANS APPROVAL DATE

REGISTERED PROFESSIONAL ENGINEER
MITCH ANDRUS
No. C48753
Exp. 9-30-12
CIVIL
STATE OF CALIFORNIA

THE STATE OF CALIFORNIA OR ITS OFFICERS OR AGENTS SHALL NOT BE RESPONSIBLE FOR THE ACCURACY OR COMPLETENESS OF ELECTRONIC COPIES OF THIS PLAN SHEET.

Caltrans Metric

PLACE HOT MIX ASPHALT DIKE

STATION TO STATION					(TYPE C) QUANTITY		(TYPE F) QUANTITY		(TYPE E) QUANTITY	
					(m)	(Tonne)	(m)	(Tonne)	(m)	(Tonne)
"A"	SB LT	97+16.50	"A" SB LT	97+66.00			49.50	1.98		
"A"	SB LT	97+66.00	"A" SB LT	97+85.00	19.00	0.43				
"A"	NB RT	97+02.50	"A" NB RT	97+22.00	19.50	0.44				
"A"	NB RT	97+22.00	"A" NB RT	97+33.33			11.33	0.45		
"A"	NB RT	102+77.00	"A" NB RT	102+97.00	20.00	0.45				
"A"	NB RT	102+97.00	"A" NB RT	105+70.52			273.52	10.94		
"H"	RT	96+53.35	"H" RT	96+72.00			18.65	0.75		
"H"	RT	96+72.00	"H" RT	96+92.00	20.00	0.45				
"H"	LT	96+49.92	"H" LT	97+63.00			113.08	4.52		
"H"	LT	97+63.00	"H" LT	97+83.00	20.00	0.45				
"H"	LT	100+48.00	"H" LT	100+68.00	20.00	0.45				
"H"	LT	100+68.00	"U4" LT	105+64.62			30.22	1.21		
"U4"	RT	105+64.61	"H" RT	101+26.00			42.39	1.70		
"H"	LT	101+26.00	"H" LT	101+45.00	19.00	0.43				
"U4"	LT	105+95.86	"U4" LT	106+20.00					24.20	1.63
"U4"	RT	106+63.00	"U4" RT	106+75.00	12.00	0.27				
"U4"	RT	106+75.00	"U4" RT	107+20.03			45.03	1.80		
"A"	NB RT	106+29.41	"A" NB RT	107+03.38			73.97	2.96		
"A"	SB LT	106+56.28	"A" SB LT	107+30.52			74.24	2.97		
"A"	NB RT	107+70.12	"A" NB RT	108+50.14					80.02	5.40
"A"	SB LT	107+96.56	"A" SB LT	108+26.00			29.44	1.18		
"A"	SB LT	108+26.00	"A" SB LT	108+53.59	27.59	0.62				
"A"	SB LT	108+53.59	"A" SB LT	109+11.46					57.87	3.91
"U3"	LT	108+39.23	"U3" LT	108+62.00			22.77	0.91		
"U3"	LT	108+62.00	"U3" LT	108+75.60	13.60	0.31				
"AS"	SB LT	124+94.00	"A" SB LT	125+59.99			65.99	2.64		
"A"	SB LT	126+19.19	"A" SB LT	128+51.00			231.81	9.27		
"A"	SB LT	129+23.00	"A" SB LT	129+34.62	11.62	0.26				
"A"	NB LT	133+73+76	"A" NB LT	133+93.00	12.04	0.27				
"A"	NB LT	133+93.00	"A" NB LT	134+07.59			14.59	0.58		
"A"	NB LT	134+71.87	"A" NB LT	134+79.00			7.13	0.29		
"A"	NB LT	134+79.00	"A" NB LT	135+05.00	26.00	0.59				
"A"	SB LT	145+73.00	"A" SB LT	145+92.00	19.00	0.43				
"A"	SB LT	145+92.00	"A" SB LT	146+00.00			8.00	0.32		
"A"	SB LT	147+10.00	"A" SB LT	148+70.20			160.20	6.41		
"A"	NB LT	167+76.55	"A" NB LT	167+84.00			7.45	0.30		
"A"	NB LT	167+84.00	"A" NB LT	168+04.00	20.00	0.45				
"A"	NB LT	172+76.00	"A" NB LT	173+62.50					86.50	5.84
"A"	NB LT	170+10.00	"A" NB LT	171+42.66					132.66	8.95
"A"	NB LT	171+42.66	"A" NB LT	171+54.00	11.34	0.26				
"A"	NB LT	171+54.00	"A" NB LT	171+61.69			7.69	0.31		
"A"	NB LT	172+49.03	"A" NB LT	172+57.00			7.97	0.32		
"A"	NB LT	172+57.00	"A" NB LT	172+76.00	19.00	0.43				
"QM1"	LT	175+06.00	"QM1" LT	177+21.00			215.00	8.60		
"QM1"	LT	177+21.00	"QM1" LT	177+32.93	11.93	0.27				
				TOTAL(TABLE 1):	336.80	7.60	1509.97	60.41	381.25	25.73

COLD PLANE ASPHALT CONCRETE PAVEMENT

(25 mm MAXIMUM)

	STATION TO STATION		QUANTITY (m^2)
NB	"A" 96+00.00	"A" 101+20.00	6025
SB	"A" 96+00.00	"A" 103+65.00	7395
	"NW2" 188+20.00	"NW2" 190+70.00	1814
	STAGE CONSTRUCTION		
	SHEETS SC-3 & SC-4		160
		SUBTOTAL (25 MAX):	15394

(60 mm MAXIMUM)

	STATION TO STATION		QUANTITY (m^2)
NB	"A" 96+00.00	"A" 96+54.00	632
SB	"A" 96+00.00	"A" 96+54.00	632
	"H" 96+49.92	"H" 97+23.00	853
	"NW2"189+70.00	"NW2" 190+70.00	1090
		SUBTOTAL(60 MAX):	3207
		TOTAL:	18601

PLACE HOT MIX ASPHALT (MISCELLANEOUS AREA)

STATION TO STATION			QUANTITY (m2)	QUANTITY (TONNE)
LT "AS"	51+85.00	103+43.90	43.93	18.12
LT "A"	125+10.00	125+41.50	33.17	13.68
LT "A"	129+28.00	129+62.00	35.80	14.77
LT "A"	131+40.00	131+84.00	46.33	19.11
LT "A"	147+40.00	147+87.00	49.48	20.41
RT "QM2"	177+25.00	177+56.00	32.64	13.46
RT "QM4"	178+55.00	178+83.00	29.48	12.16
RT "QM4"	179+90.95	180+12.00	22.16	9.14
		TOTAL:	292.99	120.86
		TOTAL (ROUNDED):	293	121

PLACE HOT MIX ASPHALT DIKE

STATION TO STATION					(TYPE C) QUANTITY		(TYPE F) QUANTITY		(TYPE E) QUANTITY	
					(m)	(Tonne)	(m)	(Tonne)	(m)	(Tonne)
"QM1"	LT	177+32.93	"QM1" LT	177+43.48					10.55	0.71
"W"	SB LT	177+48.00	"W" SB LT	177+68.00	20.00	0.45				
"W"	SB LT	177+68.00	"W" SB LT	177+83.08			15.08	0.60		
"QM4"	RT	178+71.00	"QM4" RT	179+26.00					55.00	3.71
"QM4"	RT	178+26.00	"QM4" RT	179+45.00	19.00	0.43				
"QM4"	RT	178+45.00	"QM4" RT	179+53.05			8.05	0.32		
"W"	SB LT	178+33.10	"W" SB LT	178+40.00			6.90	0.28		
"W"	SB LT	178+40.00	"W" SB LT	178+60.00	20.00	0.45				
"W"	SB LT	178+60.00	"W" SB LT	179+01.00					41.00	2.77
"W"	SB LT	179+01.00	"W" SB LT	179+23.00	22.00	0.50				
"W"	SB LT	179+23.00	"W" SB LT	179+35.95			12.95	0.52		
"QM3"	LT	178+91.26	"QM3" LT	179+08.75					17.49	1.18
"QM3"	LT	179+42.51	"QM3" LT	180+98.00			155.49	6.22		
"W"	NB LT	179+81.33	"W" NB LT	179+89.00			7.67	0.31		
"W"	NB LT	179+89.00	"W" NB LT	180+08.00	19.00	0.43				
"W"	NB LT	180+08.00	"NW2" RT	180+40.00					32.00	2.16
"NW2"	RT	185+20.00	"NW2" RT	185+40.00	20.00	0.45				
"NW2"	RT	185+40.00	"NW2" RT	185+81.00			41.00	1.64		
"NW2"	RT	185+81.00	"NW2" RT	186+02.00	20.00	0.45				
				TOTAL (TABLE 2):	140.00	3.16	247.14	9.89	156.04	10.53
				TOTAL (TABLE 1):	336.80	7.60	1509.97	60.41	381.25	25.73
				TOTAL (TABLE 1 + TABLE 2):	476.80	10.76	1757.11	70.30	537.29	36.26
				*TOTAL (ROUNDED):	477	11	1758	71	538	37

*QUANTITIES ARE INCLUDED IN THE ROADWAY QUANTITIES SUMMARY TABLE. SEE Q-1.

SUMMARY OF QUANTITIES

Q-3

REVISED BY | DATE REVISED
CALCULATED-DESIGNED BY | CHECKED BY
FUNCTIONAL SUPERVISOR: DOUGLAS S. JONES

STATE OF CALIFORNIA - DEPARTMENT OF TRANSPORTATION
Caltrans 03-DESIGN EAST

LAST REVISION 11-28-11 | DATE PLOTTED => 02-APR-2012 | TIME PLOTTED => 11:15

Dist	COUNTY	ROUTE	KILOMETER POST TOTAL PROJECT	SHEET No.	TOTAL SHEETS
01	Men	101	R69.4/R78.9	517	939

Mitch Andrus 9-22-11
REGISTERED CIVIL ENGINEER DATE

1-23-12
PLANS APPROVAL DATE

REGISTERED PROFESSIONAL ENGINEER MITCH ANDRUS No. C48753 Exp. 9-30-12 CIVIL STATE OF CALIFORNIA

THE STATE OF CALIFORNIA OR ITS OFFICERS OR AGENTS SHALL NOT BE RESPONSIBLE FOR THE ACCURACY OR COMPLETENESS OF ELECTRONIC COPIES OF THIS PLAN SHEET.

Caltrans Metric

TEMPORARY FENCE (TYPE ESA)

AREA NUMBER (#)	SHEET NUMBER L-#	LOCATION				LENGTH m
1	1,2	Lt	"A" 96+00.000	Lt	"A" 101+00.000	577
2	1,2	Rt	"A" 96+00.000	Rt	"A" 100+80.000	522
3	2-4,6	Lt	"U1" 99+48.581	Rt	"H" 96+53.350	915
4	2,3	Rt	"U2" 100+80.000	Rt	"U2" 103+03.500	237
5	3,5	Rt	"U2" 103+27.000	Rt	"H" 101+52.678	282
6	5	Lt	"H" 101+42.000			28
7	5	Rt	"U4" 105+68.730	Rt	"U4" 105+79.500	27
8	5	Rt	"U4" 105+87.432	Rt	"U4" 106+02.486	24
9	6,8	Lt	"H" 97+47.635	Lt	"U3" 108+71.844	364
10	8	Lt	"U3" 108+93.884	Lt	"U3" 109+39.379	47
11	5,8	Rt	"U4" 106+57.974	Lt	"U3" 108+32.010	183
12	8-10	Lt	"U3" 109+93.570	Lt	"AS" 44+00.418	709
13	8-10	Rt	"U4" 110+52.557	Rt	"AN" 33+11.952	421
14	10	Rt	"AN" 33+36.804	Rt	"AN" 33+59.372	46
15	10	Rt	"AN" 33+80.000			22
16	10	Lt	"AS" 44+14.289	Lt	"AS" 45+98.632	192
17	10-13	Rt	"AN" 34+34.890	Rt	"A" 125+92.062	991
18	11-13	Lt	"AS" 46+33.382	Lt	"A" 125+86.957	810
19	13-15	Rt	"A" 125+87.013	Rt	"A" 133+07.095	810
20	14,15	Lt	"A" 128+26.127	Lt	"A" 131+70.532	418
21	15	Lt	"A" 131+97.357	Lt	"A" 133+85.502	235
22	15,16	Rt	"A" 133+22.745	Rt	"A" 134+31.966	129
23	15,16	Lt	"A" 134+14.386	Rt	"A" 134+71.144	124
24	16	Lt	"A" 134+32.617	Rt	"A" 134+82.535	118
25	16	Lt	"A" 134+74.230	Lt	"A" 136+35.734	203
26	16-20	Rt	"A" 135+15.468	Rt	"CV" 10+92.070	1812
27	16-18	Lt	"A" 136+42.236	Lt	"A" 141+60.489	565
28	18-19	Lt	"A" 141+65.134	Lt	"A" 146+08.593	482
29	19,20	Lt	"A" 146+18.641	Lt	"A" 148+68.853	306
30	20	Lt	"CV" 9+31.956	Lt	"CV" 9+58.245	67
60	26	Lt	"W" 167+17.474	Rt	"W" 167+60.492	103
61	26,27	Lt	"W" 167+17.474	Lt	"W" 171+61.636	458
62	26,27	Rt	"W" 167+60.492	Rt	"W" 172+27.736	552
63	27	Lt	"W" 171+61.636	Rt	"W" 172+27.736	109
64	27	Lt	"W" 171+01.085	Rt	"W" 172+39.042	98
65	27	Lt	"W" 171+01.085	Lt	"NW1" 172+95.872	122
66	27	Lt	"W" 172+39.232	Lt	"NW1" 172+95.872	63
67	27,28,30	Rt	"W" 172+39.042	Rt	"B" 11+10.953	701
68	29	Lt	"D" 21+65.908	Lt	"D" 22+16.057	61
69	29,31	Lt	"D" 22+32.529	Lt	"F" 10+67.640	328
70	30,32	Lt	"B" 11+10.953	Rt	"QM4" 179+60.804	226
71	31	Lt	"F" 10+77.550	Lt	"F" 10+91.868	35
72	31	Lt	"F" 10+96.323	Lt	"F" 11+10.280	23
73	31,32	Rt	"F" 11+62.024	Lt	"QM3" 179+02.132	309
74	32	Lt	"QM3" 179+02.132	Rt	"QM4" 179+02.132	151
75	32	Lt	"QM3" 179+99.207	Rt	"QM4" 179+96.831	140
76	32,34,35	Lt	"QM3" 179+99.207	Lt	"F" 14+70.500	668
77	32,34-36	Rt	"QM4" 179+96.831	Rt	"NW2" 190+70.000	1152
78	31,33-35	Rt	"F" 11+62.024	Lt	"F" 18+33.967	676
79	31,33,34	Lt	"F" 11+14.550	Lt	"F" 16+70.500	567
80	34	Lt	"F" 16+82.836	Lt	"F" 17+32.997	51
81	34	Lt	"F" 17+30.061	Lt	"F" 19+07.578	59
82	34,35	Lt	"F" 18+21.487	Lt	"F" 10+04.194	85
83	35	Lt	"F" 19+12.410	Lt	"DW10" 10+42.03	183
84	35,36	Rt	"DW10" 10+42.03	Lt	"NW2" 190+70.000	353
					TOTAL:	18939

TEMPORARY FENCE (TYPE ESA - FLOODWAY)

AREA NUMBER (#)	SHEET NUMBER L-#	LOCATION				LENGTH m
40	20	Lt	"CV" 10+97.685	Lt	"W" 40+97.008	148
41	20	Lt	"CV" 11+11.348	Lt	"W" 151+09.173	154
42	20,21	Lt	"W" 151+09.173	Lt	"W" 153+36.431	218
43	20,21	Rt	"W" 150+07.827	Rt	"W" 153+54.195	290
44	21	Lt	"W" 153+36.431	Rt	"W" 153+54.195	67
45	21	Lt	"W" 153+49.623	Rt	"W" 153+66.468	66
46	21-24	Lt	"W" 153+49.623	Lt	"W" 161+54.872	778
47	21-24	Rt	"W" 153+66.468	Rt	"W" 162+73.837	937
48	24	Lt	"W" 161+54.872	Rt	"W" 162+73.837	136
49	24	Lt	"W" 161+95.429	Lt	"W" 162+27.779	94
50	24	Lt	"W" 162+38.065	Rt	"W" 162+99.383	93
51	24	Lt	"W" 162+38.065	Lt	"W" 162+93.855	64
52	24,25	Rt	"W" 162+99.383	Rt	"W" 165+13.982	224
53	24,25	Lt	"W" 163+65.293	Lt	"W" 164+63.895	97
54	25	Lt	"W" 164+63.895	Rt	"W" 165+13.982	81
55	25	Lt	"W" 165+01.206	Rt	"W" 165+50.850	89
56	25,26	Lt	"W" 165+01.206	Lt	"W" 167+13.061	204
57	25,26	Rt	"W" 165+50.850	Rt	"W" 167+28.900	183
58	26	Lt	"W" 167+13.061	Rt	"W" 167+28.900	66
					TOTAL:	3989

FENCE (TYPE WM, METAL POST)

STATION TO STATION						QUANTITY (m)
"A"	Rt	177+48.00	"H"	Rt	177+68.00	938.3
"U1"	Lt	101+43.03	"H"	Rt	97+52.00	451.5
"H"	Lt	101+44.90	"A"	Rt	125+64.42	2038.3
"U3"	Lt	107+26.00	"U3"	Lt	108+43.76	111.4
"AS"	Lt	47+58.09	"A"	Lt	125+91.65	661.6
"A"	Rt	125+78.38	"A"	Rt	134+13.60	940.5
"A"	Lt	126+06.99	"A"	Lt	134+13.60	797.4
"A"	Rt	134+62.60	"A"	Rt	149+42.00	1462.1
"A"	Lt	134+62.60	"A"	Lt	146+00.00	1226.1
"W"	Lt	167+24.09	"W"	Lt	171+68.49	463.0
"W"	Rt	167+45.22	"W"	Rt	171+80.38	551.7
"W"	Lt	172+25.59	"QM1"	Lt	177+43.48	597.6
"W"	Rt	172+39.54	"B"	Rt	11+11.00	582.9
"D"	Rt	22+74.28	"QM1"	Lt	176+92.88	126.0
"D"	Lt	22+73.62	"F"	Lt	10+67.64	277.8
"F"	Lt	10+77.55	"F"	Lt	11+10.28	65.2
"F"	Lt	11+14.55	"F"	Lt	11+62.02	55.0
"QM3"	Lt	178+91.26	"NW2"	Lt	188+35.88	1076.0
"B"	Lt	11+11.00	"NW2"	Rt	190+21.43	1145.4
					TOTAL:	13567.8

FENCE (TYPE BW, 5 STRAND, METAL POST)

STATION TO STATION						QUANTITY (m)
"W"	Lt	150+15.60	"W"	Lt	153+17.65	215.3
"W"	Rt	151+51.77	"W"	Rt	153+54.23	202.5
"W"	Lt	153+49.67	"W"	Lt	161+76.08	784.9
"W"	Rt	153+66.51	"W"	Rt	162+14.15	874.3
"W"	Lt	161+76.08	"W"	Rt	162+14.15	76.1
"W"	Rt	163+20.00	"W"	Lt	163+80.00	84.8
"W"	Rt	163+20.00	"W"	Rt	167+45.22	439.2
"W"	Lt	163+80.00	"W"	Lt	167+24.09	332.8
					TOTAL:	3009.9

TEMPORARY FENCE (TYPE BW)

STATION TO STATION						QUANTITY (m)
"A"	Rt	150+16.84	"W"	Rt	151+51.77	71.3
					TOTAL:	71.3

REMOVE FENCE

LOCATION					QUANTITY (m)
	LINE	FROM STATION	LINE	TO STATION	
Lt	U1	101+43.02	U1	102+99.72	136.2
Rt	A	96+00.00	U4	105+88.95	989.1
Rt	U4	106+40.33	AN	35+26.05	1065.4
Rt	AN	39+90.00			42.6
Rt	A	124+00.00			77.7
Rt	A	130+40.00			62.8
Rt	A	131+40.00			58.4
Lt	A	133+90.00			20.8
Rt	A	134+30.00			40.9
Lt	A	134+72.00			19.3
Rt	A	135+00.00			57.0
Rt	A	135+85.00			74.9
Rt	A	135+92.00			47.8
Lt	A	136+33.00			14.3
Lt	A	136+40.00			18.3
Rt	A	138+07.00			48.3
Lt	A	138+31.00			25.6
Lt	A	140+53.00			47.3
Rt	A	140+57.00			24.8
Rt	A	141+95.00			25.9
Rt	A	147+23.00			45.3
Lt	A	148+75.00			14.0
Lt/Rt	A	149+00.00			84.0
Rt	A	149+30.00			49.0
Rt	W	151+20.00			186.0
Lt	W	151+25.00			53.0
Lt	W	169+38.00			6.4
Rt	W	169+75.00			33.9
Rt	W	170+35.00			60.6
Lt	W	172+72.00			5.4
Rt	QM2	175+25.00			16.8
Lt	QM1	175+45.00			13.0
Lt	QM1	175+75.00			10.2
Lt	QM1	176+70.00			10.9
Rt	QM2	176+55.00			22.9
Lt	QM1	176+65.00			19.4
Rt	QM2	177+85.00			19.4
Rt	F	11+44.05	F	14+25.55	281.7
Rt	F	14+44.70	F	15+68.50	124.0
Lt	NW2	182+71.73	NW2	184+36.50	171.0
				TOTAL:	4124.3

SUMMARY OF QUANTITIES

Q-4

STATE OF CALIFORNIA - DEPARTMENT OF TRANSPORTATION
Caltrans 03-DESIGN EAST

FUNCTIONAL SUPERVISOR: DOUGLAS S. JONES
CALCULATED-DESIGNED BY
CHECKED BY
REVISED BY
DATE REVISED

LAST REVISION 11-29-11
DATE PLOTTED => 28-JAN-2012
TIME PLOTTED => 06:30

Dist	COUNTY	ROUTE	KILOMETER POST TOTAL PROJECT	SHEET No.	TOTAL SHEETS
01	Men	101	R69.4/R78.9	518	939

Mitch Andrus 9-22-11
REGISTERED CIVIL ENGINEER DATE

1-23-12
PLANS APPROVAL DATE

REGISTERED PROFESSIONAL ENGINEER MITCH ANDRUS No. C48753 Exp. 9-30-12 CIVIL STATE OF CALIFORNIA

THE STATE OF CALIFORNIA OR ITS OFFICERS OR AGENTS SHALL NOT BE RESPONSIBLE FOR THE ACCURACY OR COMPLETENESS OF ELECTRONIC COPIES OF THIS PLAN SHEET.

Caltrans Metric

200 mm PERFORATED PLASTIC PIPE UNDERDRAIN RISERS

	DESCRIPTION			TYPE	QUANTITY (m)
1	LT	"A"	99+40.000	TERMINAL RISER	3
	LT	"A"	100+40.000	UNDERDRAIN RISER	3
	LT	"U1"	100+80.000	UNDERDRAIN RISER	3
2	LT	"U1"	101+20.000	TERMINAL RISER	3
	LT	"U1"	102+20.000	UNDERDRAIN RISER	3
	LT	"U1"	103+20.000	UNDERDRAIN RISER	3
9	RT	"U2"	103+22.000	TERMINAL RISER	3
	RT	"U2"	104+20.000	UNDERDRAIN RISER	3
	RT	"U2"	105+00.000	UNDERDRAIN RISER	3
11	RT	"H"	101+43.100	TERMINAL RISER	3
12	RT	"H"	99+70.000	TERMINAL RISER	3
				SUB TOTAL	34*

*QUANTITY INCLUDED IN 200 mm PERFORATED PLASTIC PIPE UNDERDRAIN TOTAL.

200 mm PERFORATED PLASTIC PIPE UNDERDRAIN

	STATION TO STATION				QUANTITY (m)
1	"A"	99+40.000	"U1"	100+80.000	292
2	"U1"	100+20.000	"U1"	103+63.500	344
3	"U1"	103+66.500	"U1"	103+83.300	17
4	"U1"	103+88.300	"U1"	104+73.600	86
5	"U1"	104+76.400	"U1"	104+93.600	18
6	"U1"	104+96.400	"U1"	105+51.100	55
7	"U1"	105+53.900	"U1"	105+64.200	11
8	"H"	97+63.200	"U1"	105+67.100	74
9	"U2"	103+22.000	"U2"	105+35.800	214
10	"U2"	105+46.100	"H"	101+46.100	14
11	"H"	105+16.400	"H"	101+43.100	27
12	"H"	99+70.000	"H"	100+60.000	90
	200 mm PERFORATED PLASTIC PIPE UNDERDRAIN OUTLETS AND EXTENSIONS				47
	200 mm PERFORATED PLASTIC PIPE UNDERDRAIN RISERS				34
				TOTAL:	1323

SEE L-2 TO L-6 AND C-12 FOR DETAILS.

200 mm PERFORATED PLASTIC PIPE UNDERDRAIN OUTLETS AND EXTENSIONS

	DESCRIPTION			QUANTITY (m)
1	LT	"U1"	100+97.423	19
2	LT	"U1"	103+64.500	1
3	LT	"U1"	103+65.400	1
3	LT	"U1"	103+86.300	1
4	LT	"U1"	103+87.300	1
4	LT	"U1"	104+74.600	1
5	LT	"U1"	104+75.600	1
5	LT	"U1"	104+94.500	1
6	LT	"U1"	104+95.400	1
6	LT	"U1"	105+51.000	1
7	LT	"U1"	105+53.000	1
7	LT	"U1"	105+65.200	1
8	LT	"U1"	105+66.200	1
9	RT	"U2"	105+36.900	1
10	RT	"U2"	105+44.800	1
11	RT	"H"	101+15.400	1
12	RT	"H"	100+70.500	13
			SUB TOTAL	47*

*QUANTITY INCLUDED IN 200 mm PERFORATED PLASTIC PIPE UNDERDRAIN TOTAL.

UNDERDRAIN MARKER

	LOCATION			QUANTITY (EACH)
1	LT	"A"	99+40	1
	LT	"A"	100+40	1
	LT	"U1"	99+80	1
	LT	"U1"	100+80	1
2	LT	"U1"	101+20	1
	LT	"U1"	102+20	1
	LT	"U1"	103+20	1
	LT	"U1"	103+64	1
3	LT	"U1"	103+65	1
	LT	"U1"	103+86	1
4	LT	"U1"	103+87	1
	LT	"U1"	104+74	1
5	LT	"U1"	104+76	1
	LT	"U1"	104+94	1
6	LT	"U1"	104+96	1
	LT	"U1"	105+52	1
7	LT	"U1"	105+53	1
	LT	"U1"	105+65	1
8	LT	"U1"	105+66	1
	RT	"H"	97+62	1
9	RT	"U2"	103+22	1
	RT	"U2"	104+20	1
	RT	"U2"	105+00	1
	RT	"U2"	105+36	1
10	RT	"U2"	105+45	1
	RT	"H"	101+13	1
11	RT	"H"	101+16	1
	RT	"H"	101+45	1
12	RT	"H"	99+70	1
	RT	"H"	100+70	1
			TOTAL:	30

SURVEY MONUMENT

STATION*			TYPE A (EA)	TYPE D (EA)
"A" 106+40	A1R1	Br No. 10E0001	1	
"A" 112+00	NORTHBOUND			1
"A" 119+00	NORTHBOUND			1
"A" 125+80	EAST HILL ROAD UC	Br. No. 10-0157	1	
"A" 130+00	ROADWAY			1
"A" 134+40	HAEHL CREEK	Br No. 10-0159	1	
"A" 144+00	ROADWAY			1
"A" 146+50	BAECHTEL CREEK RW	Br No. 10E0009	1	
"W" 168+00	ROADWAY			1
"W" 172+00	QUAIL MEADOWS OH	Br No. 10-0171	1	
"W" 175+00	ROADWAY			1
"W" 178+00	QUAIL MEADOWS UC	Br No. 10-0173	1	
			6	6

*FINAL LOCATION AS DIRECTED BY ENGINEER.

DITCH EXCAVATION

LOCATION	QUANTITY (m^3)
RT "CV" LINE	568
TOTAL:	568

SEE D-18 FOR LOCATION.

ROADWAY CONCRETE SUMMARY

ROUNDABOUT DESCRIPTION	JOINTED PLAIN CONCRETE PAVEMENT	SEAL PAVEMENT JOINT	MINOR CONCRETE (CURB, GUTTER, SIDEWALK AND DRIVEWAY)	MINOR CONCRETE (TEXTURED PAVING)	SEAL ISOLATION JOINT
	m^3	m	m^3	m^2	m
ROADBED	840	2140			110
MULTI-USE PATH			141.7		
CURB, TYPE A1-150 (MOD)			9.0		
CURB, TYPE A2-150 (MOD)			203.5		
CURB, TYPE B2-150 (MOD)			93.7		
CURB, TYPE TA			13.9		
CURB, TYPE HR			50.6		
A-H SPLITTER ISLAND				581	
C-D SPLITTER ISLAND				103	
F-G SPLITTER ISLAND				67	
TRUCK APRON				379	
TOTAL:	840	2140	512.4	1130	110

SEE C-14 TO C-42 FOR ROUNDABOUT DETAILS.

RUMBLE STRIP

DESCRIPTION				(N) (m)	QUANTITY (STA)
NB OUTSIDE SHLD	"A"	96+00.00	100+20.00	420.00	4.2
NB OUTSIDE SHLD	"A"	102+12.00	105+60.00	348.00	3.5
SB OUTSIDE SHLD	"A"	96+00.00	98+80.00	280.00	2.8
SB OUTSIDE SHLD	"A"	103+62.00	105+90.00	228.00	2.3
NB OUTSIDE SHLD	"A"	106+35.00	107+00.00	65.00	0.7
SB OUTSIDE SHLD	"A"	106+60.00	107+30.00	70.00	0.7
NB OUTSIDE SHLD	"A"	107+73.00	108+50.00	77.00	0.8
SB OUTSIDE SHLD	"A"	107+85.00	109+07.00	122.00	1.2
SB OUTSIDE SHLD	"A"	111+30.00	111+80.00	50.00	0.5
NB OUTSIDE SHLD	"AN"	30+00.00	41+71.11	1171.11	11.7
SB OUTSIDE SHLD	"AS"	40+00.00	52+26.72	1226.72	12.3
SB INSIDE SHLD	"AN"	36+02.00	39+60.00	716.00*	7.2
CENTER MEDIAN	"AS"	49+65.00	52+26.72	261.72	2.6
CENTERLINE **	"A"	124+00.00	150+24.22	2624.22	26.2
NB OUTSIDE SHLD	"A"	124+00.00	125+55.00	155.00	1.6
SB OUTSIDE SHLD	"A"	124+00.00	125+58.00	158.00	1.6
NB OUTSIDE SHLD	"A"	126+15.00	134+07.00	792.00	7.9
SB OUTSIDE SHLD	"A"	126+20.00	134+06.00	786.00	7.9
NB OUTSIDE SHLD	"A"	134+72.00	148+20.00	1348.00	13.5
SB OUTSIDE SHLD	"A"	134+70.00	148+20.00	1350.00	13.5
CENTERLINE **	"W"	150+88.35	172+91.90	2203.55	22.0
CENTERLINE **	"NW1"	172+91.90	177+43.75	451.85	4.5
CENTERLINE **	"W"	177+40.00	180+20.00	280.00	2.8
CENTERLINE **	"NW2"	180+20.00	190+72.00	1052.00	10.5
				TOTAL:	162.5
				TOTAL (ROUNDED):	163.0

SEE C-13 FOR RUMBLE STRIP AT RAMP LOCATIONS.
(N) NOT A SEPARATE PAY ITEM, FOR INFORMATION ONLY.
* LENGTH x 2 FOR DETAIL 29 WITH RUMBLE STRIP. SEE PDD-2.
** SEE PDD-1 FOR DETAIL 22 AND DETAIL 23.

SUMMARY OF QUANTITIES

Q-5

REVISED BY | DATE REVISED
CALCULATED-DESIGNED BY | CHECKED BY
FUNCTIONAL SUPERVISOR: DOUGLAS S. JONES

STATE OF CALIFORNIA - DEPARTMENT OF TRANSPORTATION
Caltrans 03-DESIGN EAST

LAST REVISION 11-15-11 | DATE PLOTTED => 28-JAN-2012 | TIME PLOTTED => 06:37

Dist	COUNTY	ROUTE	KILOMETER POST TOTAL PROJECT	SHEET No.	TOTAL SHEETS
01	Men	101	R69.4/R78.9	519	939

Mitch Andrus 9-22-11
REGISTERED CIVIL ENGINEER DATE

1-23-12
PLANS APPROVAL DATE

REGISTERED PROFESSIONAL ENGINEER MITCH ANDRUS No. C48753 Exp. 9-30-12 CIVIL STATE OF CALIFORNIA

THE STATE OF CALIFORNIA OR ITS OFFICERS OR AGENTS SHALL NOT BE RESPONSIBLE FOR THE ACCURACY OR COMPLETENESS OF ELECTRONIC COPIES OF THIS PLAN SHEET.

Caltrans Metric

MARKER (CULVERT)

DRAINAGE SYSTEM	LOCATION			QUANTITY (EA)
6	R†	"U2"	102+97.590	1
10	R†	"U3"	107+50.000	1
11	L†	"H"	99+16.776	1
11	R†	"H"	99+40.427	1
13	R†	"U1"	106+30.000	1
14	R†	"U1"	105+50.000	1
16	R†	"A"	105+50.000	1
17	L†/R†	"H"	100+75.000	2
18	L†/R†	"U4"	106+35.000	2
20	L†	"H"	101+14.473	1
22	L†	"H"	101+49.372	1
22	R†	"H"	101+61.326	1
23	L†	"A"	107+02.306	1
25	R†	"A"	107+90.000	1
26	L†	"A"	108+70.000	1
27	L†	"U3"	108+75.000	1
28	L†	"U3"	109+75.000	1
29	L†	"A"	110+50.000	1
30	R†	"A"	110+46.109	1
30	L†	"A"	110+97.122	1
32	L†	"A"	113+10.000	1
33	L†	"A"	113+86.910	1
33	R†	"A"	115+07.605	1
34	R†	"A"	115+50.000	1
36	L†/R†	"A"	115+85.000	2
37	L†	"A"	118+50.000	1
38	L†	"A"	120+77.032	1
39	L†	"A"	121+85.000	1
40	L†	"A"	123+70.000	1
41	L†	"A"	125+30.000	1
42	L†	"A"	128+25.623	1
42	R†	"A"	129+00.195	1
43	L†	"A"	129+50.000	1
44	L†	"A"	131+50.000	1
45	L†	"A"	132+13.429	1
45	R†	"A"	132+93.349	1
46	L†	"A"	133+30.000	1
47	L†	"A"	133+90.000	1
48	L†	"A"	134+90.000	1
49	L†	"A"	141+66.365	1
49	R†	"A"	141+83.781	1
50	L†	"A"	145+90.000	1
51	L†	"A"	147+45.000	1
53	L†/R†	"CV"	9+44.131	2
54	R†	"CV"	10+70.096	1
54	L†	"CV"	10+88.642	1
55	L†	"W"	168+05.000	1
SUBTOTAL (THIS SHEET):				51
SUBTOTAL (SHEET 2):				58
SUBTOTAL (SHEET 3):				9
TOTAL:				118

MARKER (CULVERT)

DRAINAGE SYSTEM	LOCATION			QUANTITY (EA)
56	L†/R†	"W"	168+70.000	2
57	L†	"W"	170+10.000	1
58	L†/R†	"W"	171+50.000	2
59	L†/R†	"W"	172+95.000	2
60	L†	"W"	173+62.500	1
61	R†	"QM2"	174+82.031	1
62	L†	"QM1"	174+94.654	1
62	R†	"QM2"	174+95.394	1
63	L†	"W"	175+70.000	1
64	L†/R†	"W"	176+10.000	2
65	L†/R†	"D1"	21+68.638	2
66	R†	"D1"	23+23.141	1
67	R†	"RA2"	23+75.000	1
68	R†	"RA2"	24.17.600	1
69	R†	"RA2"	24+47.784	1
70	L†	"QM1"	177+43.077	1
71	R†	"RA3"	30+48.086	1
72	R†	"RA5"	51+74.243	1
73	L†	"RA5"	50+43.500	1
75	L†	"GW"	11+08.046	1
75	R†	"GW"	11+23.240	1
76	R†	"RA2"	25+11.091	1
77	R†	"QM2"	177+50.000	1
78	L†	"W"	177+50.000	1
79	L†/R†	"W"	177+65.000	2
80	L†/R†	"QM2"	177+82.500	2
81	L†	"QM2"	177+90.000	1
82	L†	"RA4"	40+48.759	1
83	L†/R†	"B"	11+03.464	2
84	L†	"QM4"	178+50.000	1
85	L†/R†	"QM4"	178+62.500	2
86	L†/R†	"W"	178+70.000	2
87	R†	"QM4"	178+75.000	1
88	L†	"W"	179+10.000	1
89	L†	"QM3"	179+55.000	1
90	R†	"QM4"	180+05.000	1
91	L†	"QM3"	180+23.882	1
91	R†	"W"	180+30.000	1
92	L†	"QM3"	180+34.920	1
93	L†	"QM3"	180+65.000	1
94	L†/R†	"W"	181+50.000	2
95	L†	"W"	181+90.000	1
96	L†	"W"	182+35.000	1
97	L†/R†	"W"	183+90.000	2
98	L†	"F"	17+74.366	1
98	R†	"F"	17+74.596	1
SUBTOTAL (THIS SHEET 2):				58

MARKER (CULVERT)

DRAINAGE SYSTEM	LOCATION			QUANTITY (EA)
99	L†	"F"	19+82.756	1
99	R†	"F"	19+97.404	1
101	R†	"W"	187+09.170	1
101	L†	"W"	187+10.680	1
102	R†	"F"	20+26.785	1
105	L†/R†	"W"	188+90.000	2
107	L†/R†	"W"	190+96.257	2
SUBTOTAL (THIS SHEET 3):				9

IRRIGATION CROSSOVERS

DESCRIPTION			CONDUIT TYPE (3) LENGTH (m) 200 (mm) DN	250 (mm) DN	(N) WATER LINE CROSSOVER SIZE (mm) DN	(N) SPRINKLER CONTROL CROSSOVER SIZE (mm) DN
	R†	L†				
"A" 105+10.00	X			12.9	100	50
"A" 105+10.00		X		12.9	100	50
"A" 108+10.00	X			12.9	100	50
"A" 108+10.00		X		12.9	100	50
"A" 111+20.00	X			14.5	100	50
"A" 111+20.00		X		12.9	100	50
"A" 125+10.00		X		13.2	100	50
"A" 126+60.00		X		13.2	100	50
"A" 130+10.00		X		13.2	100	50
"A" 133+70.00		X		13.2	100	50
"A" 135+20.00		X		13.2	100	50
"A" 136+13.00	X	X		125.0	100	50
"A" 139+40.00		X		13.2	100	50
"A" 143+80.00		X		13.2	100	50
"A" 148+20.00		X		13.2	100	50
"W" 168+20.00		X		13.8	100	50
"W" 171+20.00		X		16.8	100	50
"W" 172+80.00		X		16.8	100	50
"W" 177+40.00		X		13.2	100	50
"W" 178+60.00		X		13.2	100	50
"W" 180+10.00		X		13.2	100	50
"NW2" 182+60.00		X		16.8	100	50
"H" 99+50.00	X	X	13.2		75	50
"H" 100+50.00	X	X	13.2		75	50
"B" 9+60.00	X	X	16.3		75	50
"B" 10+40.00	X	X	13.2		75	50
TOTAL			55.9	413.4		

(N) - NOT A SEPARATE PAY ITEM FOR INFORMATION ONLY
DN - DIAMETER NOMINAL
X - DENOTES REQUIREMENT

CONDUIT TYPE
(APPLICABLE WHEN CIRCLED BELOW AND SHOWN UNDER THE 'CONDUIT TYPE' COLUMN HEADING)

1 BITUMINOUS COATED CORRUGATED STEEL PIPE (1.626 mm THICK)
2 CORRUGATED STEEL PIPE (1.626 mm THICK)
(3) CORRUGATED HIGH DENSITY POLYETHYLENE PIPE
4 ALTERNATIVE CONDUIT

SUMMARY OF QUANTITIES

Q-6

STATE OF CALIFORNIA - DEPARTMENT OF TRANSPORTATION
Caltrans 03-DESIGN EAST

FUNCTIONAL SUPERVISOR: DOUGLAS S. JONES
CALCULATED-DESIGNED BY
CHECKED BY
REVISED BY
DATE REVISED

LAST REVISION 04-05-10
DATE PLOTTED => 28-JAN-2012
TIME PLOTTED => 06:31

Dist	COUNTY	ROUTE	KILOMETER POST TOTAL PROJECT	SHEET No.	TOTAL SHEETS
01	Men	101	R69.4/R78.9	520	939

Caltrans Metric

Mitch Andrus 9-22-11
REGISTERED CIVIL ENGINEER DATE

1-23-12
PLANS APPROVAL DATE

REGISTERED PROFESSIONAL ENGINEER MITCH ANDRUS No. C48753 Exp. 9-30-12 CIVIL STATE OF CALIFORNIA

THE STATE OF CALIFORNIA OR ITS OFFICERS OR AGENTS SHALL NOT BE RESPONSIBLE FOR THE ACCURACY OR COMPLETENESS OF ELECTRONIC COPIES OF THIS PLAN SHEET.

DRAINAGE WICK

FROM	TO	DRAINAGE WICK (m)
Br No. 10-0165	Br No. 10-0171	278 182.8
Br No. 10-0171	Br No. 10-0173	735 336.0
Br No. 10-0173	Br No. 10-0174K Br No. 10-0174 Br No. 10-0174S	252 579.6
Br No. 10-0174K Br No. 10-0174 Br No. 10-0174S	Sta 180+55	78 044.4
TOTAL		1 344 142.8

TEMPORARY SUMP SYSTEM

NUMBER	LOCATION (℄ OF DI)	EA
1	"W" 168+40.00 Rt 21.45	1
2	"W" 171+20.00 Rt 24.45	1
3	"NW1" 173+21.00 Rt 39.45	1
4	"QM2" 175+48.00 Rt 33.45	1
5	"QM2" 177+70.00 Rt 18.45	1
6	"QM4" 179+01.00 Rt 22.45	1
7	"QM4" 180+56.00 Rt 26.45	1
	TOTAL	7

STABILIZATION TRENCH SYSTEM "U3"

CLASS 1 PERMEABLE MATERIAL	* FILTER FABRIC	300 mm PERFORATED PLASTIC PIPE UNDERDRAIN	300 mm PLASTIC PIPE
m^3	m^2	m	m
182	1234	35	18

SEE C-10 FOR LOCATION AND DETAILS.
SEE Q-1 FOR ROADWAY EXCAVATION QUANTITY.
*SEE SHEET LD-5 FOR ADDITIONAL QUANTITY FOR ROUNDABOUT.

HORIZONTAL STRIP DRAIN

FROM	TO	150 mm HORIZONTAL STRIP DRAIN (m)	300 mm HORIZONTAL STRIP DRAIN (m)
Br No. 10-0165	Br No. 10-0171	8 751	456
Br No. 10-0171	Br No. 10-0173	22 853	595
Br No. 10-0173	Br No. 10-0174K Br No. 10-0174 Br No. 10-0174S	7 495	162
Br No. 10-0174K Br No. 10-0174 Br No. 10-0174S	Sta 180+61	2 452	72
TOTAL		41 551	1 285

200 mm PLASTIC PIPE (COLLECTOR)

FROM	TO	200 mm PLASTIC PIPE (COLLECTOR) (m)
Br No. 10-0165	Br No. 10-0171	139.7
Br No. 10-0171	Br No. 10-0173	341.4
Br No. 10-0173	Br No. 10-0174K Br No. 10-0174 Br No. 10-0174S	78.8
Br No. 10-0174K Br No. 10-0174 Br No. 10-0174S	Sta 180+61	45.5
TOTAL		605.4

SUMMARY OF QUANTITIES

Q-7

REVISED BY MGA
DATE REVISED 05-30-11
KAO THAO
SCOTT FOSTER
CALCULATED-DESIGNED BY
CHECKED BY
FUNCTIONAL SUPERVISOR
DOUGLAS S. JONES

STATE OF CALIFORNIA - DEPARTMENT OF TRANSPORTATION
Caltrans 03-DESIGN EAST

LAST REVISION 09-16-11 DATE PLOTTED => 28-JAN-2012 TIME PLOTTED => 06:31

Dist	COUNTY	ROUTE	KILOMETER POST TOTAL PROJECT	SHEET No.	TOTAL SHEETS
01	Men	101	R69.4/R78.9	521	939

LICENSED LANDSCAPE ARCHITECT

1-23-12
PLANS APPROVAL DATE

LICENSED LANDSCAPE ARCHITECT JAMES G. WILLIAMSON No. 5415 Signature 02-29-12 Renewal Date 09-19-11 Date STATE OF CALIFORNIA

THE STATE OF CALIFORNIA OR ITS OFFICERS OR AGENTS SHALL NOT BE RESPONSIBLE FOR THE ACCURACY OR COMPLETENESS OF ELECTRONIC COPIES OF THIS PLAN SHEET.

Caltrans Metric

NOTE:

FOR ACCURATE RIGHT OF WAY DATA, CONTACT RIGHT OF WAY ENGINEERING AT THE DISTRICT OFFICE.

LEGEND:

BOULDER PLACEMENT

- (A) 2.00 TO 3.75 TONNE
- (B) 0.75 TO 2.00 TONNE
- (C) 0.25 TO 0.75 TONNE

- MULCH & TOPSOIL
- MULCH & FILTER FABRIC
- GRAVEL (Misc AREAS) & FILTER FABRIC
- ROCK SLOPE PROTECTION (1/2T, METHOD A) - SEE ROUNDABOUT GRADING PLAN
- EDGING (STEEL)

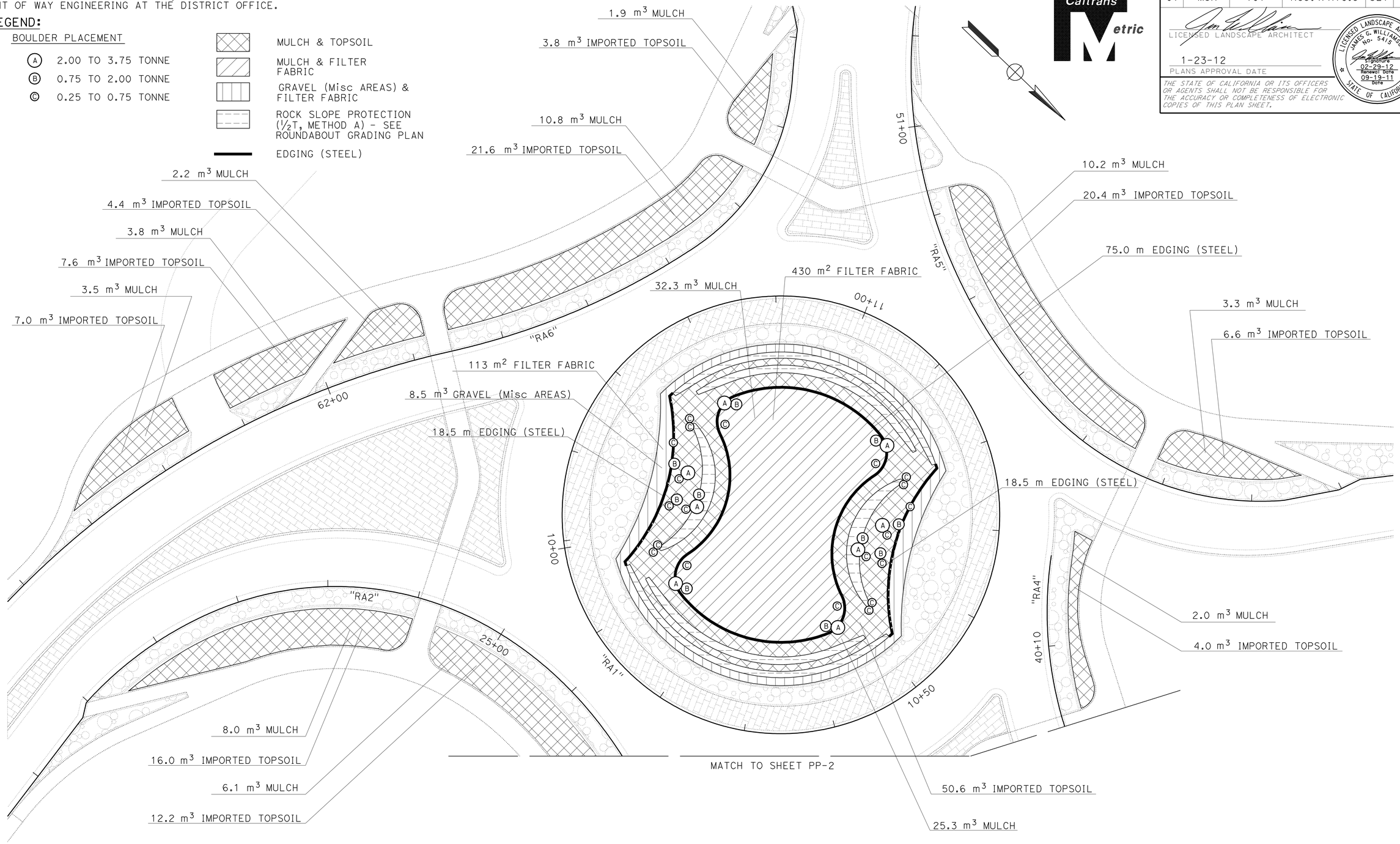

ALL DIMENSIONS ARE IN METERS UNLESS OTHERWISE SHOWN.

PLANTING PLAN

SCALE 1:200

APPROVED FOR PLANTING WORK ONLY

PP-1

REVISED BY | DATE REVISED

J. WILLIAMSON

CALCULATED-DESIGNED BY | CHECKED BY

SENIOR LANDSCAPE ARCHITECT

T. CHRIS JOHNSON

STATE OF CALIFORNIA - DEPARTMENT OF TRANSPORTATION

Caltrans LANDSCAPE ARCHITECTURE

LAST REVISION 04-23-10 | DATE PLOTTED => 28-JAN-2012 | TIME PLOTTED => 06:31

Dist	COUNTY	ROUTE	KILOMETER POST TOTAL PROJECT	SHEET No.	TOTAL SHEETS
01	Men	101	R69.4/R78.9	522	939

LICENSED LANDSCAPE ARCHITECT

1-23-12
PLANS APPROVAL DATE

LICENSED LANDSCAPE ARCHITECT JAMES G. WILLIAMSON No. 5415 Signature 02-29-12 Renewal Date 09-19-11 Date STATE OF CALIFORNIA

THE STATE OF CALIFORNIA OR ITS OFFICERS OR AGENTS SHALL NOT BE RESPONSIBLE FOR THE ACCURACY OR COMPLETENESS OF ELECTRONIC COPIES OF THIS PLAN SHEET.

Caltrans Metric

NOTE:

FOR ACCURATE RIGHT OF WAY DATA, CONTACT RIGHT OF WAY ENGINEERING AT THE DISTRICT OFFICE.

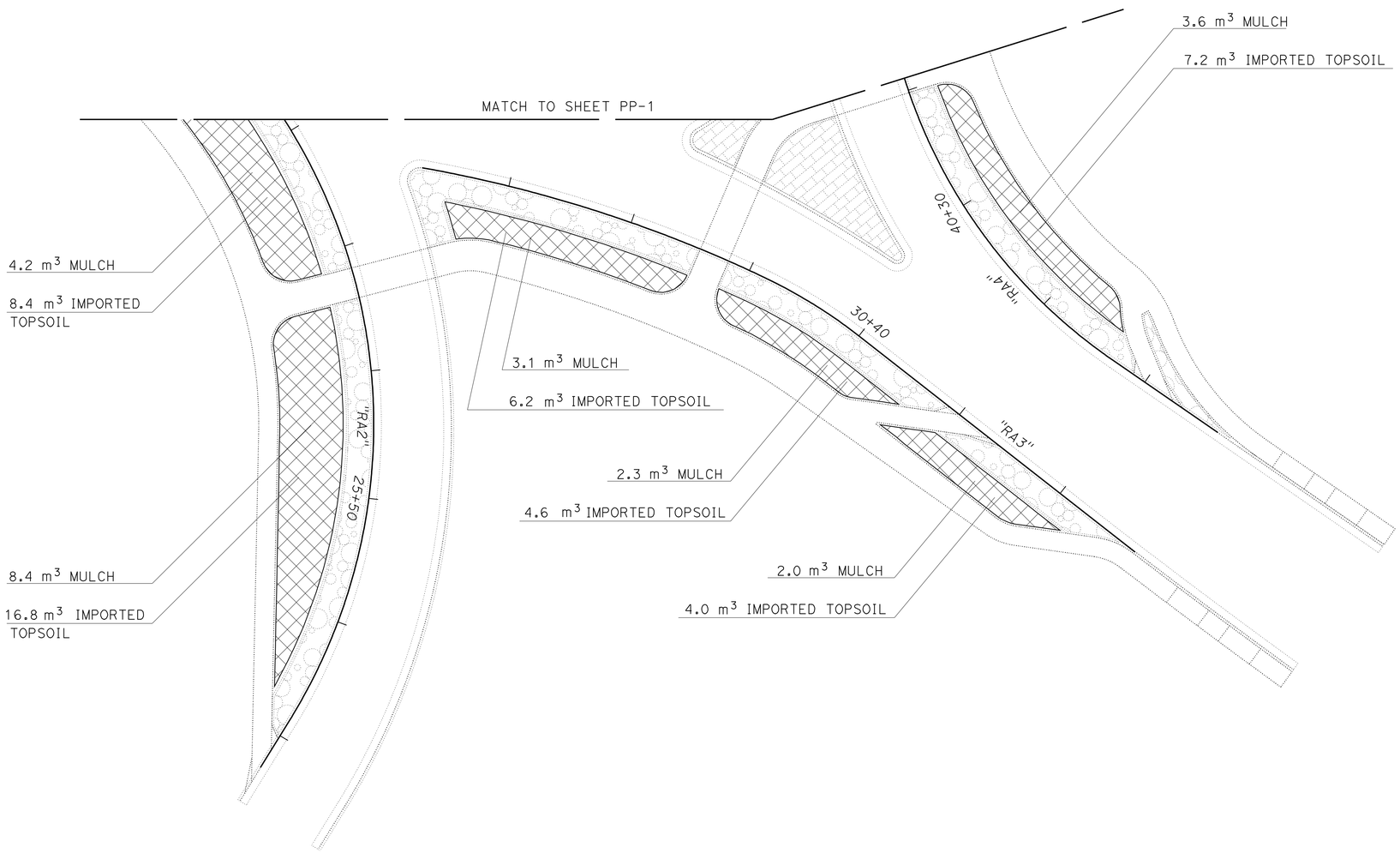

ALL DIMENSIONS ARE IN METERS UNLESS OTHERWISE SHOWN.

PLANTING PLAN

SCALE 1:200

PP-2

APPROVED FOR PLANTING WORK ONLY

STATE OF CALIFORNIA - DEPARTMENT OF TRANSPORTATION
Caltrans LANDSCAPE ARCHITECTURE

SENIOR LANDSCAPE ARCHITECT: T. CHRIS JOHNSON
CALCULATED-DESIGNED BY: J. WILLIAMSON
CHECKED BY
REVISED BY
DATE REVISED

LAST REVISION 04-23-10
DATE PLOTTED => 28-JAN-2012
TIME PLOTTED => 06:31

NOTE: FOR ACCURATE RIGHT OF WAY DATA, CONTACT
RIGHT OF WAY ENGINEERING AT THE DISTRICT OFFICE.

Dist	COUNTY	ROUTE	KILOMETER POST TOTAL PROJECT	SHEET No.	TOTAL SHEETS
01	Men	101	R69.4/R78.9	523	939

LICENSED LANDSCAPE ARCHITECT

1-23-12
PLANS APPROVAL DATE

LICENSED LANDSCAPE ARCHITECT JAMES G. WILLIAMSON No. 5415 Signature 02-29-12 Renewal Date 09-19-11 Date STATE OF CALIFORNIA

THE STATE OF CALIFORNIA OR ITS OFFICERS OR AGENTS SHALL NOT BE RESPONSIBLE FOR THE ACCURACY OR COMPLETENESS OF ELECTRONIC COPIES OF THIS PLAN SHEET.

Caltrans Metric

NOTES:

1. UNLABLED PLASTIC PIPE (PR200) (SUPPLY LINE) DOWNSTREAM OF CAM COUPLER SHALL BE 25 mm UNLESS OTHERWISE NOTED.
2. FLUSH VALVES SHALL BE PLACED AT THE LOWEST POINTS IN THE SYSTEMS.

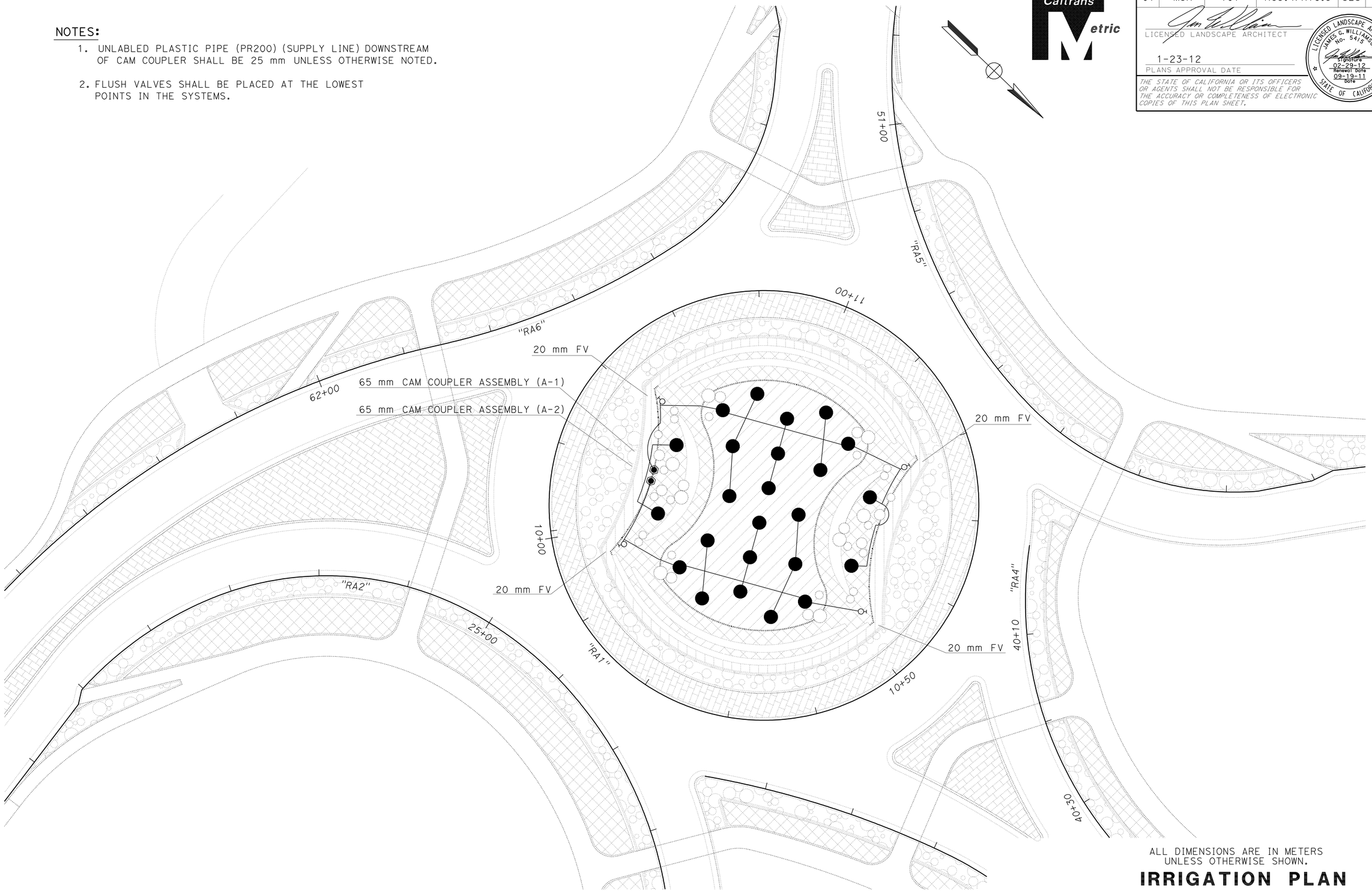

ALL DIMENSIONS ARE IN METERS
UNLESS OTHERWISE SHOWN.

IRRIGATION PLAN

SCALE 1:200

IP-1

THIS PLAN ACCURATE FOR IRRIGATION WORK ONLY.

STATE OF CALIFORNIA - DEPARTMENT OF TRANSPORTATION
Caltrans
LANDSCAPE ARCHITECTURE

SENIOR LANDSCAPE ARCHITECT: T. CHRIS JOHNSON
CALCULATED-DESIGNED BY: J. WILLIAMSON
CHECKED BY
REVISED BY
DATE REVISED

LAST REVISION 04-23-10
DATE PLOTTED => 28-JAN-2012
TIME PLOTTED => 06:31

Dist	COUNTY	ROUTE	KILOMETER POST TOTAL PROJECT	SHEET No.	TOTAL SHEETS
01	Men	101	R69.4/R78.9	524	939

Caltrans Metric

LICENSED LANDSCAPE ARCHITECT

1-23-12
PLANS APPROVAL DATE

LICENSED LANDSCAPE ARCHITECT JAMES G. WILLIAMSON No. 5415 Signature 02-29-12 Renewal Date 09-19-11 Date STATE OF CALIFORNIA

THE STATE OF CALIFORNIA OR ITS OFFICERS OR AGENTS SHALL NOT BE RESPONSIBLE FOR THE ACCURACY OR COMPLETENESS OF ELECTRONIC COPIES OF THIS PLAN SHEET.

SPRINKLER SCHEDULE

SYMBOL	TYPE	DESCRIPTION	SPRAY PATTERN	OPERATING PRESSURE (KILOPASCAL) (kPa)	PRESSURE COMPENSATING	PLUS / MINUS 5% ② DISCHARGE: LITERS PER SECOND L/sec	LITERS PER MINUTE L/min	LITERS PER HOUR L/h	RADIUS (IN METERS)(m)	WIDTH x LENGTH (IN METERS)(m)	MATERIAL	INLET CONNECTION (NPT) (DN IN MILLIMETERS)(mm)	POSITIVE-LOCKING ADJ ARC STOP	BACKSPLASH PREVENTER	DIFFUSER PIN	DISTANCE CONTROL FLAP	ADJ DISCHARGE	RISER: TYPE	MATERIAL: PLASTIC	MATERIAL: GALVANIZED	SIZE (IPS) (IN MILLIMETERS)(mm)	HEIGHT (IN MILLIMETERS)(mm)	FLOW SHUTOFF DEVICE	⑤ SWING JOINT (TYPE)	RISER SUPPORT	SPRINKLER PROTECTOR (TYPE)	REMARKS
●	C-2	FLOOD BUBBLER	--	206	X	--	1.8	--	--	--	PL	12	--	--	--	--	--	V	FH	--	12	1800	--	--	--	--	BUBBLER-TWO PER LOCATION

X IN BOX DENOTES REQUIREMENT

APPLICABLE WHEN CIRCLED BELOW:

1 - See Special Provisions.
2 - If a pressure compensating device is specified, the discharge and radii shown reflect its use.
3 - Arc Stop shall be fitted with a nut and bolt.
4 - Vinyl-coated cast iron housing.
5 - Swing Joints required adjacent to shoulders, curbs, sidewalks, and dikes.
6 - Unless otherwise shown on plans.

ABBREVIATIONS

ADJ — adjustable
B/B — brass/bronze
B/B/PL — brass/bronze/plastic
B/PL — brass/plastic
CST — center strip
DN — diameter nominal
EST — end strip
F — full circle
FH — flexible hose
F/P — full/part circle
H — half circle
IPS — iron pipe size
kPa — kilopascal
L/h — liters per hour
L/min — liters per minute
L/sec — liters per second
m — meters
mm — millimeters
NPT — national pipe thread
P — part circle
PL — plastic
Q — quarter circle
SST — side strip
T — third circle
TQ — three quarter circle
TT — two third circle

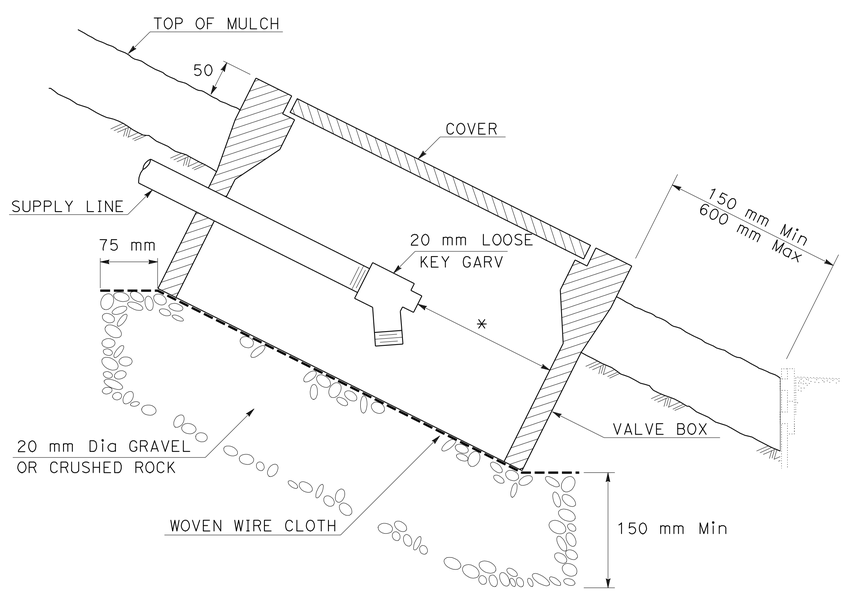

* - 50 mm CLEARANCE ON ALL SIDES Min

FLUSH VALVE
SECTION

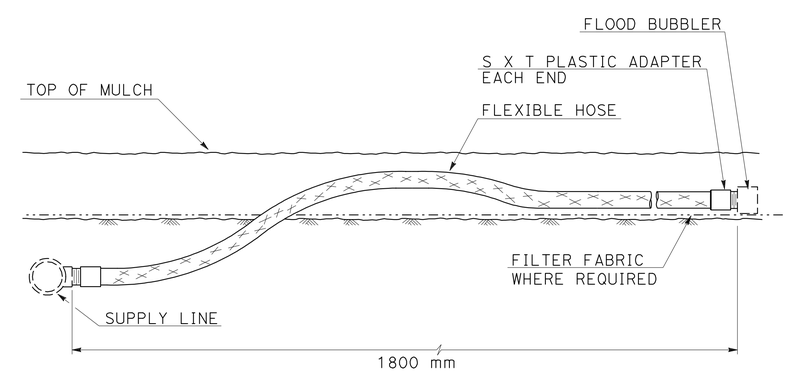

RISER TYPE V
ELEVATION

ALL DIMENSIONS ARE IN METERS
UNLESS OTHERWISE SHOWN.

ROUNDABOUT LANDSCAPE DETAILS

NO SCALE

LD-1

STATE OF CALIFORNIA - DEPARTMENT OF TRANSPORTATION
Caltrans
LANDSCAPE ARCHITECTURE
SENIOR LANDSCAPE ARCHITECT T. CHRIS JOHNSON
CALCULATED-DESIGNED BY J. WILLIAMSON
CHECKED BY
REVISED BY
DATE REVISED

LAST REVISION 12-21-09 DATE PLOTTED => 28-JAN-2012 TIME PLOTTED => 06:32

Dist	COUNTY	ROUTE	KILOMETER POST TOTAL PROJECT	SHEET No.	TOTAL SHEETS
01	Men	101	R69.4/R78.9	525	939

LICENSED LANDSCAPE ARCHITECT

1-23-12
PLANS APPROVAL DATE

LICENSED LANDSCAPE ARCHITECT JAMES G. WILLIAMSON No. 5415 Signature 02-29-12 Renewal Date 09-19-11 Date STATE OF CALIFORNIA

THE STATE OF CALIFORNIA OR ITS OFFICERS OR AGENTS SHALL NOT BE RESPONSIBLE FOR THE ACCURACY OR COMPLETENESS OF ELECTRONIC COPIES OF THIS PLAN SHEET.

Caltrans Metric

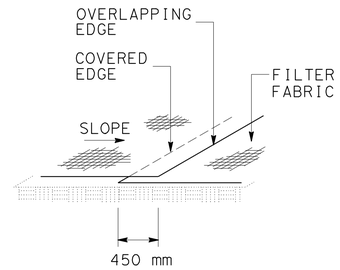

FILTER FABRIC
PERSPECTIVE

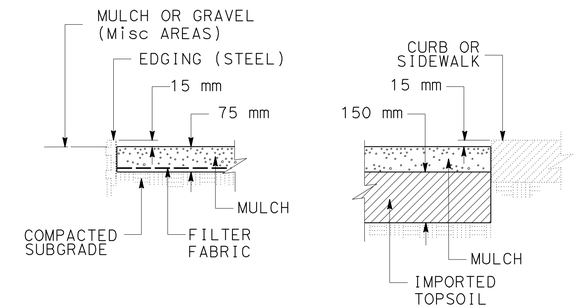

MULCH
SECTION

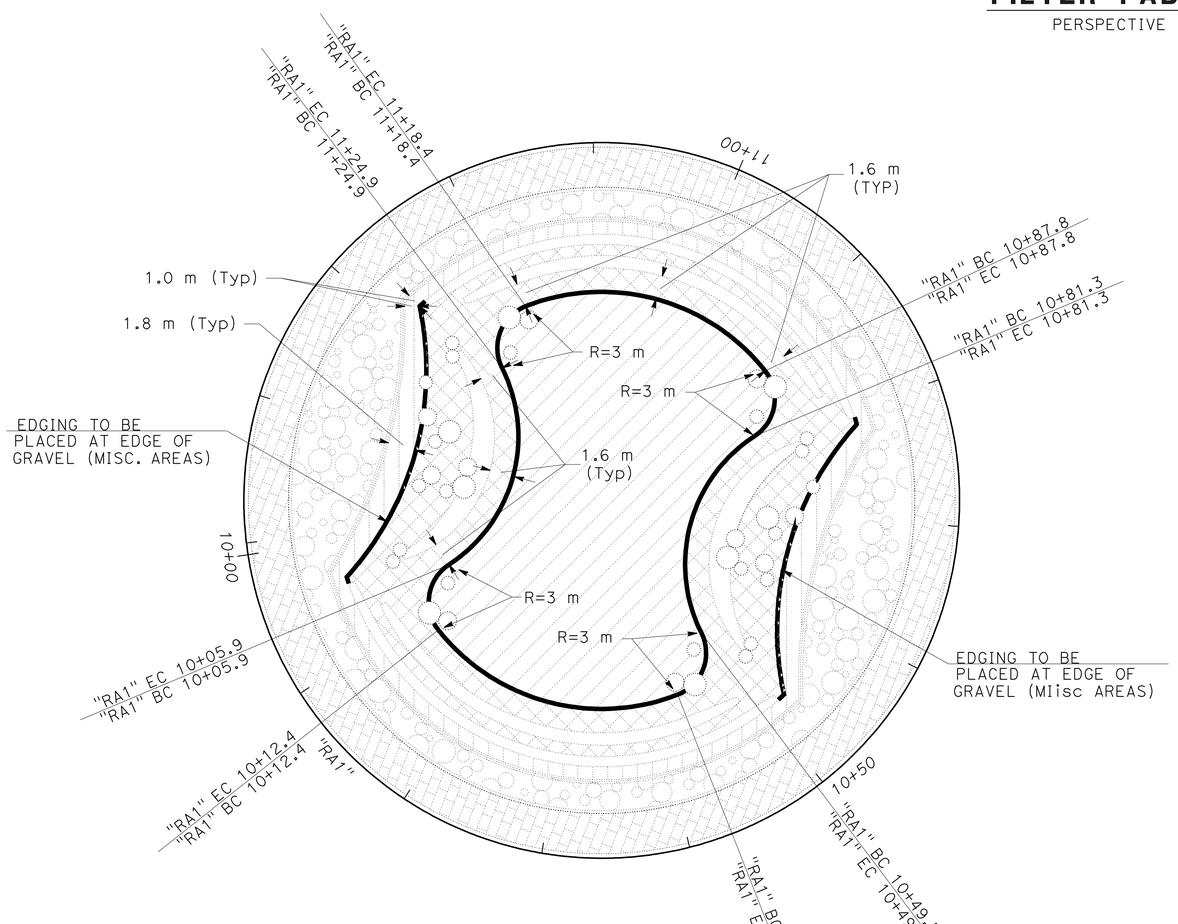

EDGING (STEEL) LAYOUT DETAIL
PLAN

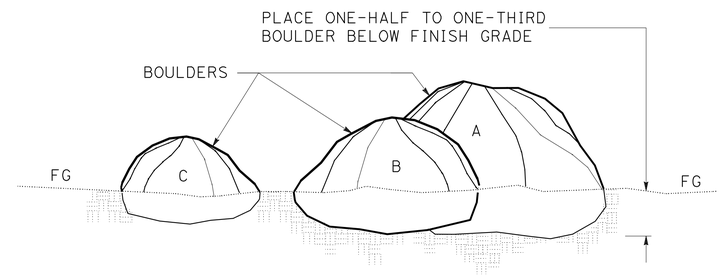

BOULDER
SECTION

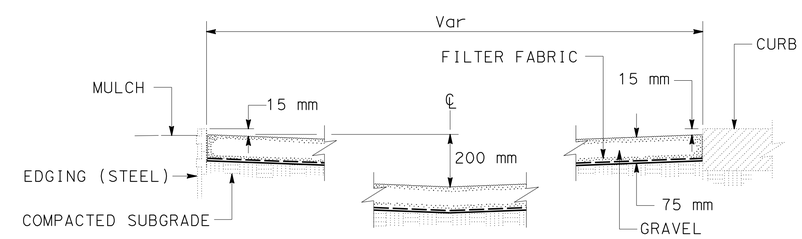

GRAVEL (MISCELLANEOUS AREAS)
SECTION

ALL DIMENSIONS ARE IN METERS UNLESS OTHERWISE SHOWN.

ROUNDABOUT LANDSCAPE DETAILS
NO SCALE

LD-2

STATE OF CALIFORNIA - DEPARTMENT OF TRANSPORTATION
Caltrans LANDSCAPE ARCHITECTURE

SENIOR LANDSCAPE ARCHITECT: T. CHRIS JOHNSON
CALCULATED-DESIGNED BY: J. WILLIAMSON
CHECKED BY
REVISED BY
DATE REVISED

LAST REVISION 04-23-10 | DATE PLOTTED => 28-JAN-2012 | TIME PLOTTED => 06:32

Dist	COUNTY	ROUTE	KILOMETER POST TOTAL PROJECT	SHEET No.	TOTAL SHEETS
01	Men	101	R69.4/R78.9	526	939

LICENSED LANDSCAPE ARCHITECT

1-23-12
PLANS APPROVAL DATE

LICENSED LANDSCAPE ARCHITECT JAMES G. WILLIAMSON No. 5415 Signature 02-29-12 Renewal Date 09-19-11 Date STATE OF CALIFORNIA

THE STATE OF CALIFORNIA OR ITS OFFICERS OR AGENTS SHALL NOT BE RESPONSIBLE FOR THE ACCURACY OR COMPLETENESS OF ELECTRONIC COPIES OF THIS PLAN SHEET.

Caltrans Metric

LEGEND:

CENTER LINE OF GRAVEL (MISCELLANEOUS AREAS)

① TOP OF GRAVEL (MISCELLANEOUS AREAS)

LIMITS OF ROCK SLOPE PROTECTION (½T, METHOD A)

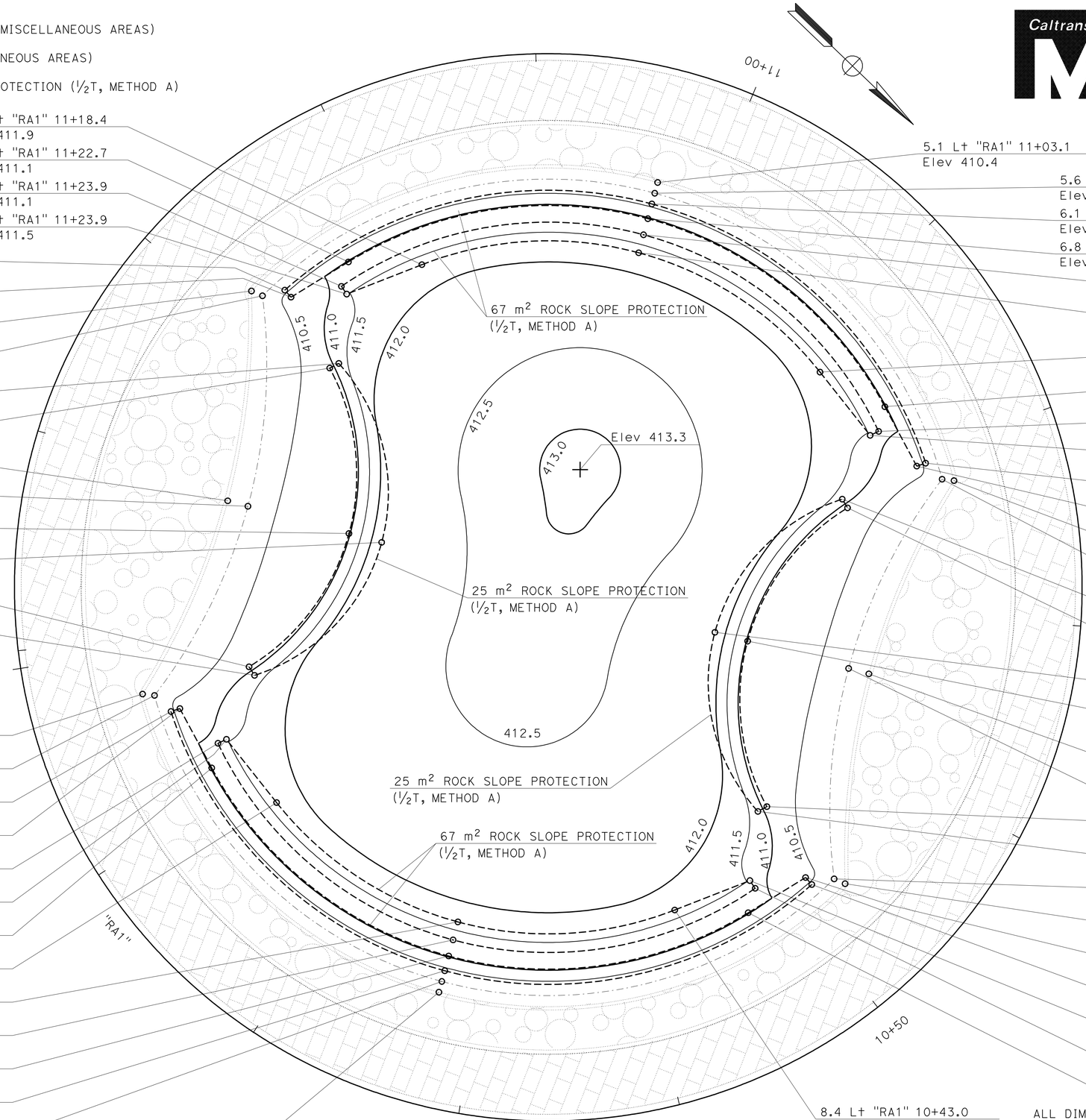

ALL DIMENSIONS ARE IN METERS UNLESS OTHERWISE SHOWN.

ROUNDABOUT GRADING PLAN

ROUNDABOUT LANDSCAPE DETAILS

SCALE 1:100

LD-3

STATE OF CALIFORNIA - DEPARTMENT OF TRANSPORTATION
Caltrans LANDSCAPE ARCHITECTURE

SENIOR LANDSCAPE ARCHITECT: T. CHRIS JOHNSON

CALCULATED-DESIGNED BY: J. WILLIAMSON
CHECKED BY

REVISED BY | DATE REVISED

LAST REVISION 04-23-10 | DATE PLOTTED => 28-JAN-2012 | TIME PLOTTED => 06:32

Dist	COUNTY	ROUTE	KILOMETER POST TOTAL PROJECT	SHEET No.	TOTAL SHEETS
01	Men	101	R69.4/R78.9	527	939

LICENSED LANDSCAPE ARCHITECT

1-23-12
PLANS APPROVAL DATE

LICENSED LANDSCAPE ARCHITECT JAMES G. WILLIAMSON No. 5415 Signature 02-29-12 Renewal Date 09-19-11 Date STATE OF CALIFORNIA

THE STATE OF CALIFORNIA OR ITS OFFICERS OR AGENTS SHALL NOT BE RESPONSIBLE FOR THE ACCURACY OR COMPLETENESS OF ELECTRONIC COPIES OF THIS PLAN SHEET.

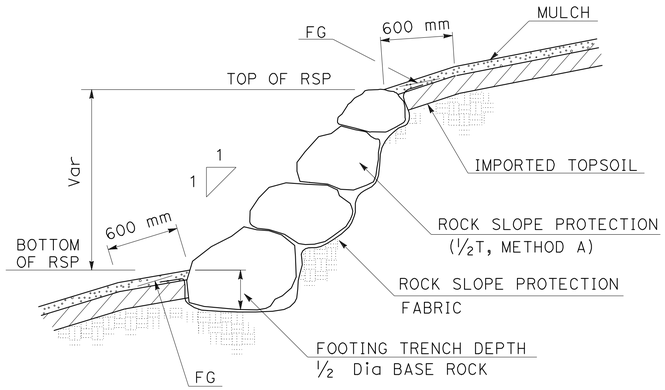

"RA1" 10+52.1 to 10+78.7
"RA1" 11+27.5 to 10+03.3

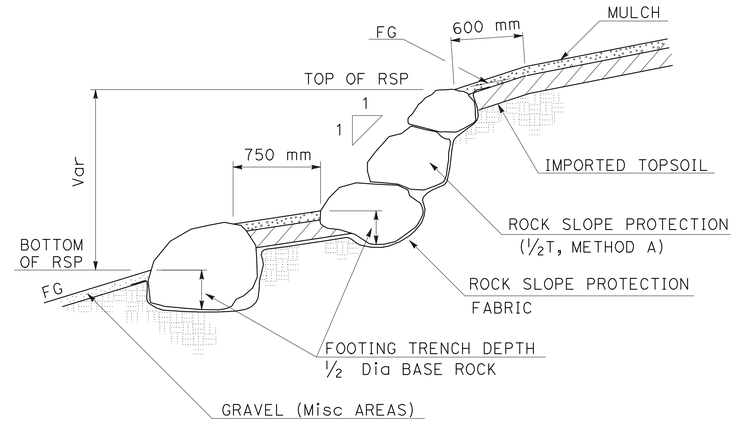

"RA1" 10+04.0 to 10+51.4
"RA1" 10+79.4 to 11+26.8

ROCK SLOPE PROTECTION (1/2 T, METHOD A)

SECTION
NO SCALE

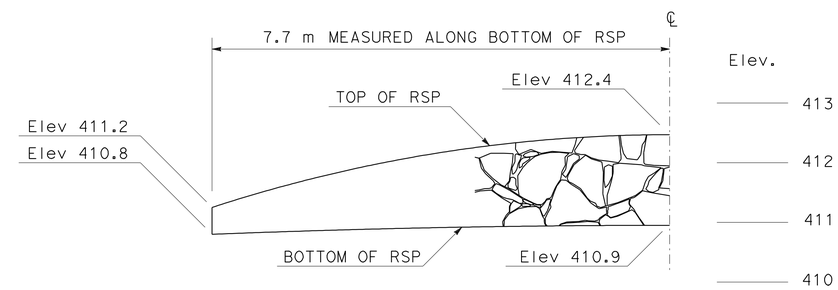

"RA1" 10+52.1 to 10+78.7
"RA1" 11+27.5 to 10+03.3

RSP QUANTITY TABLE

STATION	(*) ROCK SLOPE PROTECTION (1/2T, METHOD A)	(*) ROCK SLOPE PROTECTION FABRIC
	m^2	m^2
"RA1" 10+04.0 Lt TO "RA1" 10+51.4 Lt	67	67
"RA1" 10+52.1 Lt TO "RA1" 10+78.7 Lt	25	25
"RA1" 10+79.4 Lt TO "RA1" 11+26.8 Lt	67	67
"RA1" 11+27.5 Lt TO "RA1" 10+03.3 Lt	25	25
TOTAL	184	184

(*) - SEE SHEET DQ-20

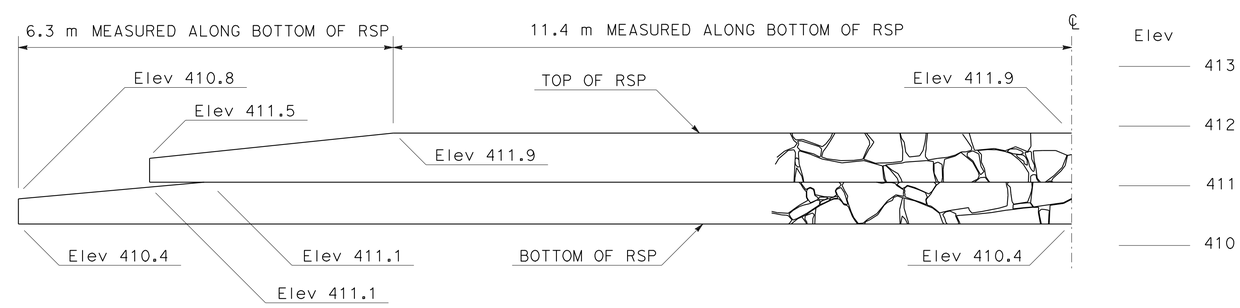

"RA1" 10+04.0 TO 10+51.4
"RA1" 10+79.4 TO 11+26.8

ROCK SLOPE PROTECTION (1/2 T, METHOD A)

PROFILE

ALL DIMENSIONS ARE IN METERS UNLESS OTHERWISE SHOWN.

ROUNDABOUT LANDSCAPE DETAILS

SCALE 1:50

LD-4

STATE OF CALIFORNIA - DEPARTMENT OF TRANSPORTATION
Caltrans
LANDSCAPE ARCHITECTURE
SENIOR LANDSCAPE ARCHITECT: T. CHRIS JOHNSON
CALCULATED-DESIGNED BY: J. WILLIAMSON
CHECKED BY
REVISED BY
DATE REVISED

LAST REVISION 04-23-10 | DATE PLOTTED => 28-JAN-2012 | TIME PLOTTED => 06:32

Dist	COUNTY	ROUTE	KILOMETER POST TOTAL PROJECT	SHEET No.	TOTAL SHEETS
01	Men	101	R69.4/R78.9	528	939

Caltrans Metric

LICENSED LANDSCAPE ARCHITECT

1-23-12
PLANS APPROVAL DATE

LICENSED LANDSCAPE ARCHITECT JAMES G. WILLIAMSON No. 5415 Signature 02-29-12 Renewal Date 09-19-11 Date STATE OF CALIFORNIA

THE STATE OF CALIFORNIA OR ITS OFFICERS OR AGENTS SHALL NOT BE RESPONSIBLE FOR THE ACCURACY OR COMPLETENESS OF ELECTRONIC COPIES OF THIS PLAN SHEET.

LANDSCAPE QUANTITY TABLE

SHEET	STATION	MULCH	IMPORTED TOPSOIL	GRAVEL (Misc AREAS)	(*) FILTER FABRIC	EDGING (STEEL)	BOULDERS
		m^3	m^3	m^3	m^2	m	EA
PP-1	"RA1" 10+00.0 L† TO "RA1" 11+50.8 L†	57.6	50.6	8.5	528.0	112.0	38
PP-1	"RA2" 24+53.3 R† TO "RA2" 24+90.2 R†	8.0	16.0	--	--	--	--
PP-1	"RA2" 24+92.8 R† TO "RA2" 25+17.6 R†	6.1	12.2	--	--	--	--
PP-1	"RA4" 39+97.2 L† TO "RA4" 40+17.7 L†	2.0	4.0	--	--	--	--
PP-1	"RA5" 51+07.3 L† TO "RA5" 51+45.7 L†	10.2	20.4	--	--	--	--
PP-1	"RA5" 51+48.3 L† TO "RA5" 51+66.5 L†	3.3	6.6	--	--	--	--
PP-1	"RA6" 61+68.7 L† TO "RA6" 61+84.7 L†	3.5	7.0	--	--	--	--
PP-1	"RA6" 61+89.2 L† TO "RA6" 62+04.4 L†	3.8	7.6	--	--	--	--
PP-1	"RA6" 62+00.9 L† TO "RA6" 62+11.8 L†	2.2	4.4	--	--	--	--
PP-1	"RA6" 62+14.2 L† TO "RA6" 62+54.2 L†	10.8	21.6	--	--	--	--
PP-1	"RA6" 62+56.8 L† TO "RA6" 62+68.6 L†	1.9	3.8	--	--	--	--
PP-2	"RA2" 25+13.9 R† TO "RA2" 25+31.7 R†	4.2	8.4	--	--	--	--
PP-2	"RA2" 25+34.3 R† TO "RA2" 25+67.5 R†	8.4	16.8	--	--	--	--
PP-2	"RA3" 30+05.3 R† TO "RA3" 30+25.8 R†	3.1	6.2	--	--	--	--
PP-2	"RA3" 30+28.2 R† TO "RA3" 30+46.3 R†	2.3	4.6	--	--	--	--
PP-2	"RA3" 30+45.3 R† TO "RA3" 30+62.3 R†	2.0	4.0	--	--	--	--
PP-2	"RA4" 40+20.3 L† TO "RA4" 40+46.8 L†	3.6	7.2	--	--	--	--
	TOTAL	133.0	201.4	8.5	528.0	112.0	38

(*) - SEE SHEET Q-1

IRRIGATION QUANTITY TABLE

DESCRIPTION			UNIT	ASSEMBLY NUMBER A-1	A-2	TOTALS	UNIT	DESCRIPTION		
PLASTIC PIPE SUPPLY LINE	PR 200	25 mm	m	80	78	158	m	25 mm	PR 200	PLASTIC PIPE SUPPLY LINE
ASSEMBLIES	CCA	65 mm	EA	1	1	2	EA	65 mm	CCA	ASSEMBLIES
ASSEMBLIES	FV	20 mm	EA	2	2	4	EA	20 mm	FV	ASSEMBLIES
SPRINKLER TYPE		C-2	EA	24	24	48	EA	C-2		SPRINKLER TYPE

ABBREVIATIONS

CCA — cam coupler assembly
EA — each
FV — flush valve
m — meter
mm — millimeter
PR — pressure rated

ROUNDABOUT LANDSCAPE DETAILS

LD-5

STATE OF CALIFORNIA - DEPARTMENT OF TRANSPORTATION
Caltrans LANDSCAPE ARCHITECTURE

SENIOR LANDSCAPE ARCHITECT: T. CHRIS JOHNSON
CALCULATED-DESIGNED BY: J. WILLIAMSON
CHECKED BY
REVISED BY
DATE REVISED

LAST REVISION 04-23-12 | DATE PLOTTED => 28-JAN-2012 | TIME PLOTTED => 06:32

Dist	COUNTY	ROUTE	KILOMETER POST TOTAL PROJECT	SHEET No.	TOTAL SHEETS
01	Men	101	R69.4/R78.9	529	939

Normanye 12-27-11
REGISTERED ELECTRICAL ENGINEER

1-23-12
PLANS APPROVAL DATE

REGISTERED PROFESSIONAL ENGINEER NORMAN S. YE No. 16913 Exp. 6-30-13 ELECTRICAL STATE OF CALIFORNIA

THE STATE OF CALIFORNIA OR ITS OFFICERS OR AGENTS SHALL NOT BE RESPONSIBLE FOR THE ACCURACY OR COMPLETENESS OF ELECTRONIC COPIES OF THIS PLAN SHEET.

Caltrans Metric

NOTE: FOR COMPLETE RIGHT OF WAY AND ACCURATE ACCESS DATA, SEE RIGHT OF WAY RECORD MAPS AT DISTRICT OFFICE.

PROJECT NOTES (THIS SHEET ONLY):

1. INSTALL UNMETERED TYPE III-AF ENCLOSURE, CMS/EMS SUBPANEL WITH 5 kVA STEP-DOWN TRANSFORMER 480-120/240 V. SEE DETAIL "J" ON SHEET E-12 FOR FOUNDATION DETAILS. FOR WIRING DIAGRAM, SEE THIS SHEET.
2. INSTALL STATE-FURNISHED MODEL 334 CONTROLLER CABINET WITH MODEL 170 CONTROLLER FOR CMS. COIL 1.8 METER OF HARNESS #4 AND #5 IN THE CABINET. INSTALL TMS FIELD ELEMENT COMMUNICATION SYSTEMAS SHOWN ON SHEET E-14. SEE DETAIL "J" ON SHEET E-12 FOR FOUNDATION DETAILS.
3. INSTALL STATE-FURNISHED MODEL 500 LED CMS ON FULL CANTILEVER SIGN STRUCTURE.
4. 2-78C, 1 CMS HARNESS #4 AND HARNESS #5, COMM CABLE.
5. INSTALL EMS WITH FLASHING BEACONS, SEE Std PLANS RSP ES-14C.
6. 78C, 3#8 (CMS), 1 CMS HARNESS #4 AND HARNESS #5, COMM CABLE.

GENERAL NOTES (FOR ALL SHEETS):

1. REFER TO BRIDGE PLANS FOR CONDUITS TO BE INSTALLED ON STRUCTURES.

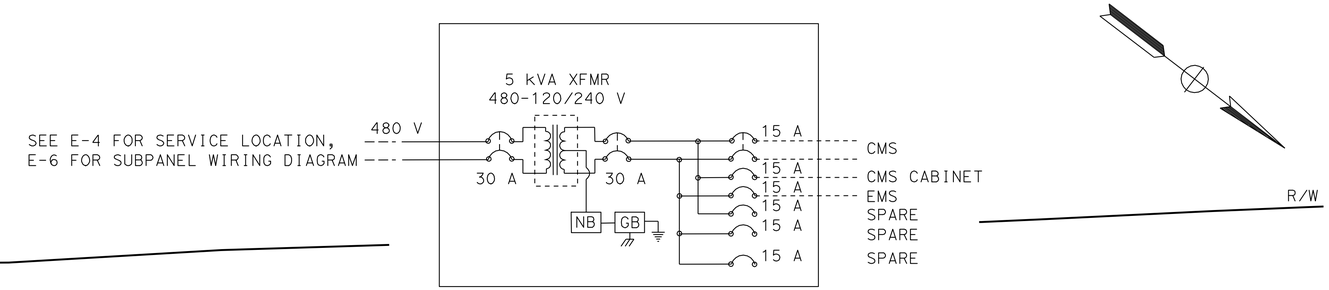

CMS/EMS SUBPANEL WIRING DIAGRAM

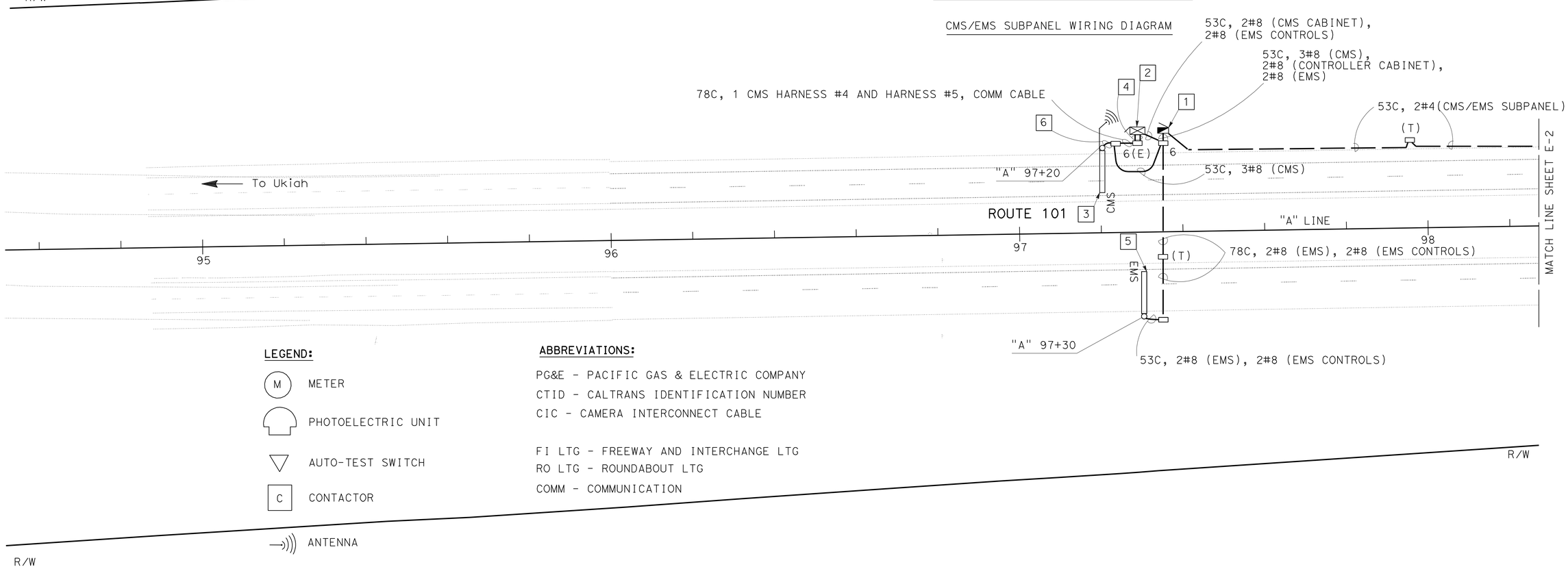

LEGEND:

- (M) METER
- PHOTOELECTRIC UNIT
- AUTO-TEST SWITCH
- [C] CONTACTOR
- ANTENNA

ABBREVIATIONS:

PG&E - PACIFIC GAS & ELECTRIC COMPANY
CTID - CALTRANS IDENTIFICATION NUMBER
CIC - CAMERA INTERCONNECT CABLE

FI LTG - FREEWAY AND INTERCHANGE LTG
RO LTG - ROUNDABOUT LTG
COMM - COMMUNICATION

ALL DIMENSIONS ARE IN METERS UNLESS OTHERWISE SHOWN.

CHANGEABLE MESSAGE SIGN SYSTEM
EXTINGUISHABLE MESSAGE SIGN SYSTEM
TMS FIELD ELEMENT COMMUNICATION SYSTEM

SCALE 1:500

E-1

APPROVED FOR ELECTRICAL WORK ONLY

REVISED BY	NY
DATE REVISED	12-22-11
CALCULATED-DESIGNED BY	BRIAN CHOW
CHECKED BY	JAGTAR DHALIWAL
FUNCTIONAL SUPERVISOR	NELSON LEE

STATE OF CALIFORNIA - DEPARTMENT OF TRANSPORTATION
Caltrans
OFFICE OF ELECTRICAL DESIGN
SACRAMENTO

LAST REVISION 1-25-12
DATE PLOTTED => 27-JAN-2012
TIME PLOTTED => 13:29

Dist	COUNTY	ROUTE	KILOMETER POST TOTAL PROJECT	SHEET No.	TOTAL SHEETS
01	Men	101	R69.4/R78.9	530	939

Caltrans Metric

Normanye 12-27-11
REGISTERED ELECTRICAL ENGINEER

1-23-12
PLANS APPROVAL DATE

REGISTERED PROFESSIONAL ENGINEER NORMAN S. YE No. 16913 Exp. 6-30-13 ELECTRICAL STATE OF CALIFORNIA

THE STATE OF CALIFORNIA OR ITS OFFICERS OR AGENTS SHALL NOT BE RESPONSIBLE FOR THE ACCURACY OR COMPLETENESS OF ELECTRONIC COPIES OF THIS PLAN SHEET.

NOTE: FOR COMPLETE RIGHT OF WAY AND ACCURATE ACCESS DATA, SEE RIGHT OF WAY RECORD MAPS AT DISTRICT OFFICE.

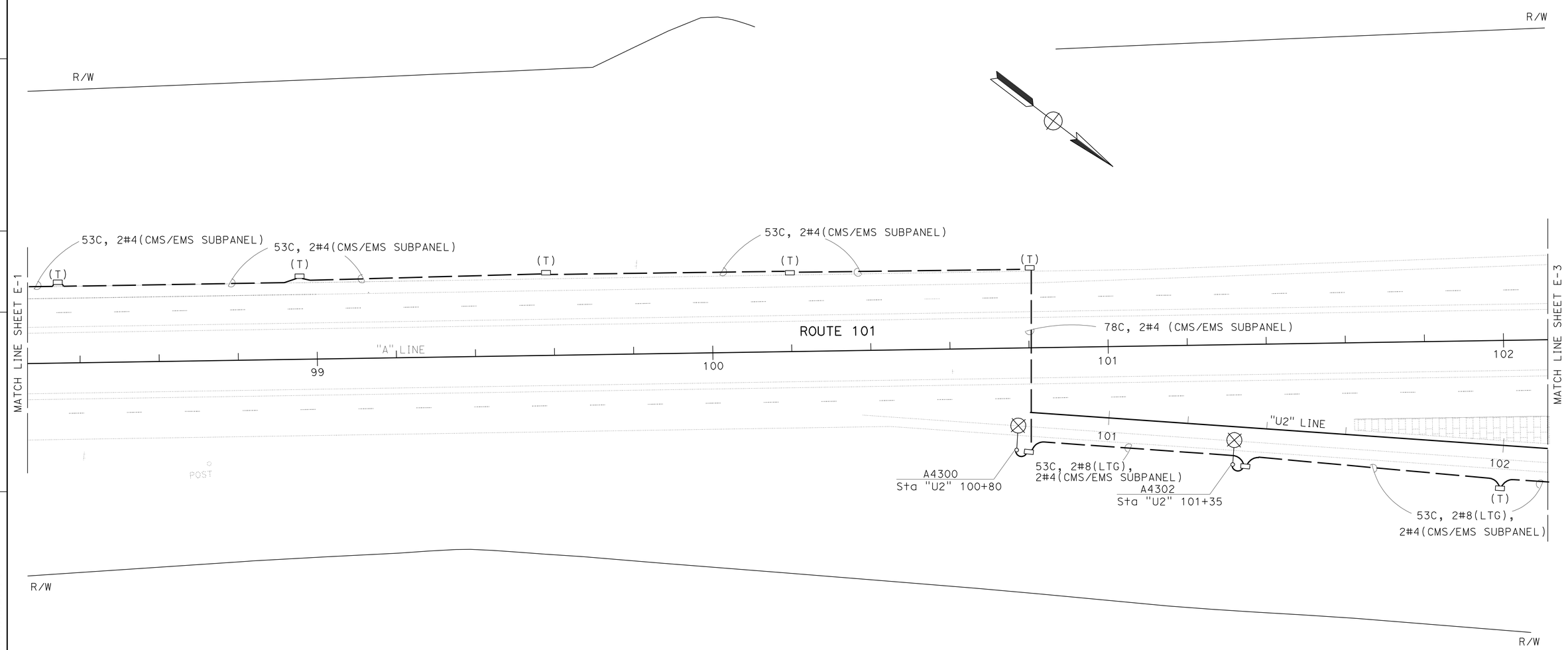

ALL DIMENSIONS ARE IN METERS
UNLESS OTHERWISE SHOWN.

LIGHTING
CHANGEABLE MESSAGE SIGN SYSTEM
EXTINGUISHABLE MESSAGE SIGN SYSTEM

SCALE 1:500

E-2

APPROVED FOR ELECTRICAL WORK ONLY

NY	9-27-11	REVISED BY / DATE REVISED
BRIAN CHOW		CALCULATED-DESIGNED BY
JAGTAR DHALIWAL		CHECKED BY
NELSON LEE		FUNCTIONAL SUPERVISOR

STATE OF CALIFORNIA - DEPARTMENT OF TRANSPORTATION
Caltrans
OFFICE OF ELECTRICAL DESIGN
SACRAMENTO

LAST REVISION 1-25-12
DATE PLOTTED => 27-JAN-2012
TIME PLOTTED => 13:29

Dist	COUNTY	ROUTE	KILOMETER POST TOTAL PROJECT	SHEET No.	TOTAL SHEETS
01	Men	101	R69.4/R78.9	531	939

Normanye 12-27-11
REGISTERED ELECTRICAL ENGINEER

1-23-12
PLANS APPROVAL DATE

REGISTERED PROFESSIONAL ENGINEER NORMAN S. YE No. 16913 Exp. 6-30-13 ELECTRICAL STATE OF CALIFORNIA

THE STATE OF CALIFORNIA OR ITS OFFICERS OR AGENTS SHALL NOT BE RESPONSIBLE FOR THE ACCURACY OR COMPLETENESS OF ELECTRONIC COPIES OF THIS PLAN SHEET.

NOTE: FOR COMPLETE RIGHT OF WAY AND ACCURATE ACCESS DATA, SEE RIGHT OF WAY RECORD MAPS AT DISTRICT OFFICE.

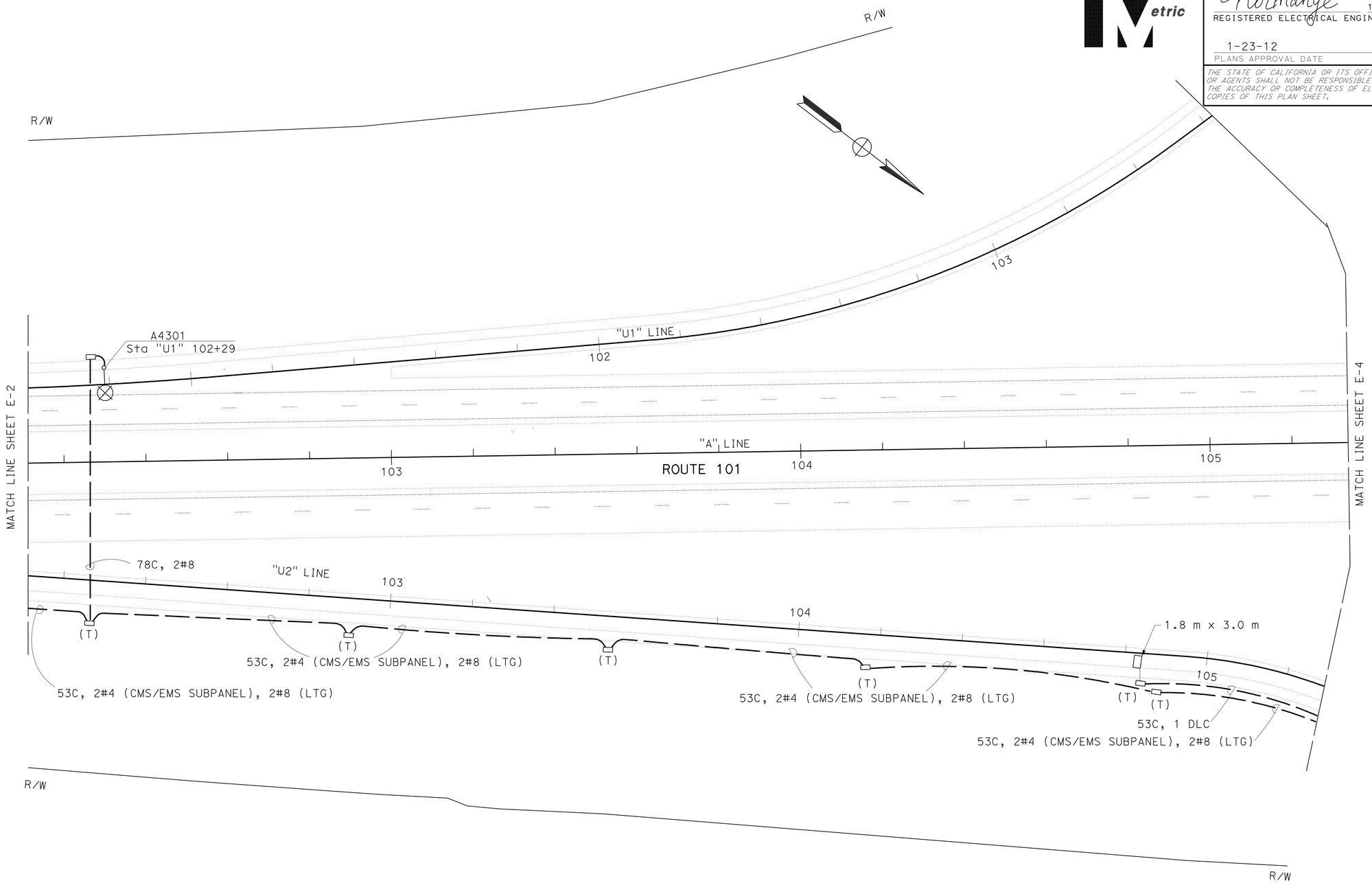

ALL DIMENSIONS ARE IN METERS UNLESS OTHERWISE SHOWN.

LIGHTING
CHANGEABLE MESSAGE SIGN SYSTEM
EXTINGUISHABLE MESSAGE SIGN SYSTEM
TRAFFIC MONITORING STATION

SCALE 1:500

E-3

APPROVED FOR ELECTRICAL WORK ONLY

REVISED BY	NY
DATE REVISED	9-27-11
BRIAN CHOW	
JAGTAR DHALIWAL	
CALCULATED-DESIGNED BY	
CHECKED BY	
FUNCTIONAL SUPERVISOR	
NELSON LEE	

STATE OF CALIFORNIA - DEPARTMENT OF TRANSPORTATION
Caltrans
OFFICE OF ELECTRICAL DESIGN
SACRAMENTO

LAST REVISION 1-25-12
DATE PLOTTED => 27-JAN-2012
TIME PLOTTED => 13:29

Dist	COUNTY	ROUTE	KILOMETER POST TOTAL PROJECT	SHEET No.	TOTAL SHEETS
01	Men	101	R69.4/R78.9	532	939

Caltrans Metric

Normanye 12-27-11
REGISTERED ELECTRICAL ENGINEER

1-23-12
PLANS APPROVAL DATE

REGISTERED PROFESSIONAL ENGINEER NORMAN S. YE No. 16913 Exp. 6-30-13 ELECTRICAL STATE OF CALIFORNIA

THE STATE OF CALIFORNIA OR ITS OFFICERS OR AGENTS SHALL NOT BE RESPONSIBLE FOR THE ACCURACY OR COMPLETENESS OF ELECTRONIC COPIES OF THIS PLAN SHEET.

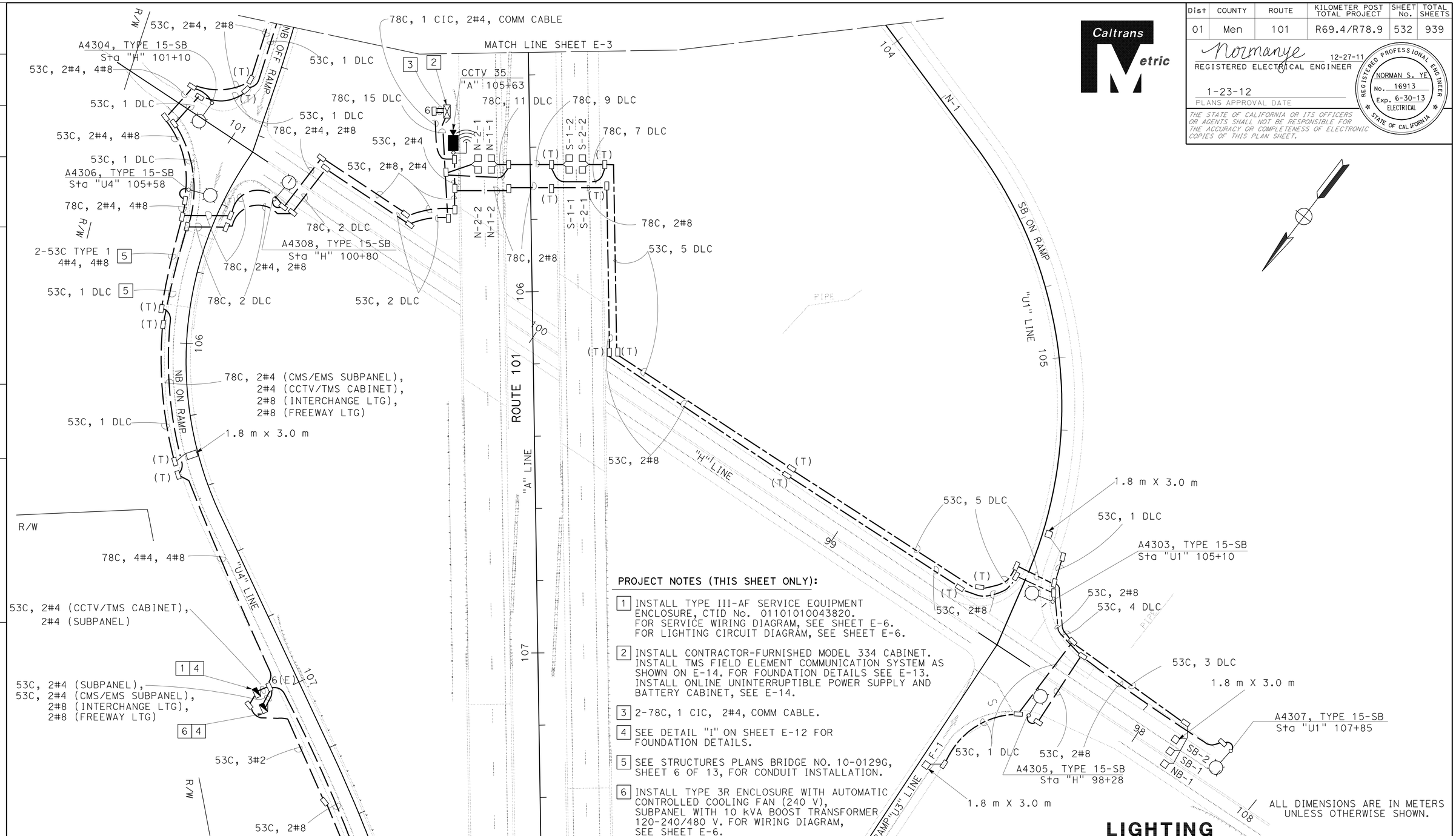

PROJECT NOTES (THIS SHEET ONLY):

1. INSTALL TYPE III-AF SERVICE EQUIPMENT ENCLOSURE, CTID No. 01101010043820. FOR SERVICE WIRING DIAGRAM, SEE SHEET E-6. FOR LIGHTING CIRCUIT DIAGRAM, SEE SHEET E-6.
2. INSTALL CONTRACTOR-FURNISHED MODEL 334 CABINET. INSTALL TMS FIELD ELEMENT COMMUNICATION SYSTEM AS SHOWN ON E-14. FOR FOUNDATION DETAILS SEE E-13. INSTALL ONLINE UNINTERRUPTIBLE POWER SUPPLY AND BATTERY CABINET, SEE E-14.
3. 2-78C, 1 CIC, 2#4, COMM CABLE.
4. SEE DETAIL "I" ON SHEET E-12 FOR FOUNDATION DETAILS.
5. SEE STRUCTURES PLANS BRIDGE NO. 10-0129G, SHEET 6 OF 13, FOR CONDUIT INSTALLATION.
6. INSTALL TYPE 3R ENCLOSURE WITH AUTOMATIC CONTROLLED COOLING FAN (240 V), SUBPANEL WITH 10 kVA BOOST TRANSFORMER 120-240/480 V. FOR WIRING DIAGRAM, SEE SHEET E-6.

NOTE: FOR COMPLETE RIGHT OF WAY AND ACCURATE ACCESS DATA, SEE RIGHT OF WAY RECORD MAPS AT DISTRICT OFFICE.

APPROVED FOR ELECTRICAL WORK ONLY

LIGHTING
CHANGEABLE MESSAGE SIGN SYSTEM
EXTINGUISHABLE MESSAGE SIGN SYSTEM
CLOSED CIRCUIT TELEVISION SYSTEM
TRAFFIC MONITORING STATION
TMS FIELD ELEMENT COMMUNICATION SYSTEM

SCALE 1:500

E-4

NY	12-21-11
REVISED BY	DATE REVISED
BRIAN CHOW	JAGTAR DHALIWAL
CALCULATED-DESIGNED BY	CHECKED BY
FUNCTIONAL SUPERVISOR	NELSON LEE

STATE OF CALIFORNIA - DEPARTMENT OF TRANSPORTATION
Caltrans
OFFICE OF ELECTRICAL DESIGN
SACRAMENTO

LAST REVISION 1-25-12
DATE PLOTTED => 27-JAN-2012
TIME PLOTTED => 13:29

Dist	COUNTY	ROUTE	KILOMETER POST TOTAL PROJECT	SHEET No.	TOTAL SHEETS
01	Men	101	R69.4/R78.9	533	939

Normanye 12-27-11
REGISTERED ELECTRICAL ENGINEER

1-23-12
PLANS APPROVAL DATE

REGISTERED PROFESSIONAL ENGINEER NORMAN S. YE No. 16913 Exp. 6-30-13 ELECTRICAL STATE OF CALIFORNIA

THE STATE OF CALIFORNIA OR ITS OFFICERS OR AGENTS SHALL NOT BE RESPONSIBLE FOR THE ACCURACY OR COMPLETENESS OF ELECTRONIC COPIES OF THIS PLAN SHEET.

Caltrans Metric

PROJECT NOTES (THIS SHEET ONLY):

1. INSTALL PG&E SPECIFIED PULL BOX.
2. 53C, TYPE 3, SCHEDULE 80, MT. CONDUCTORS TO BE INSTALLED AND SPLICED BY PG&E.
3. TYPE PG&E RISER.

NOTE: FOR COMPLETE RIGHT OF WAY AND ACCURATE ACCESS DATA, SEE RIGHT OF WAY RECORD MAPS AT DISTRICT OFFICE.

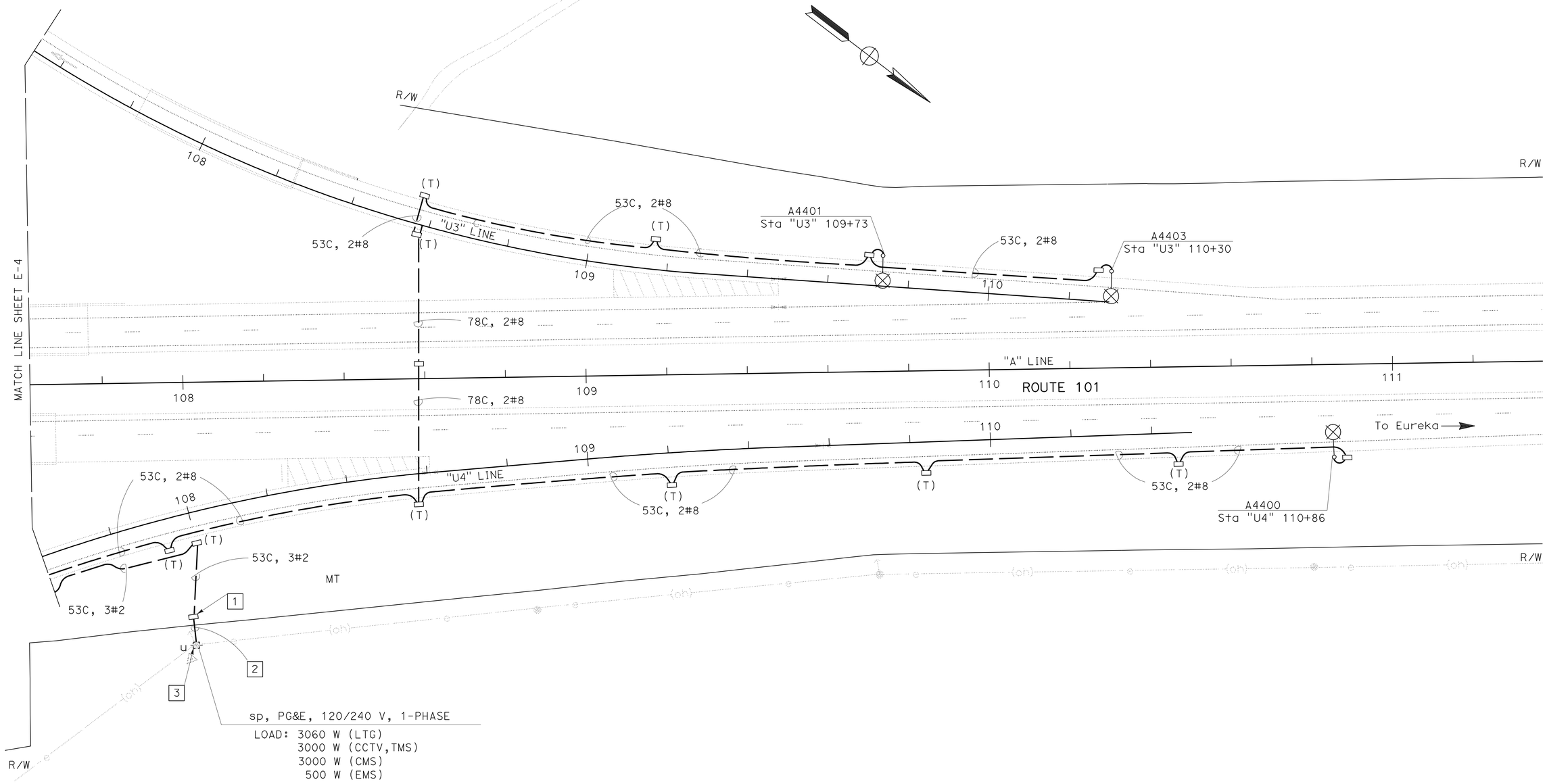

ALL DIMENSIONS ARE IN METERS UNLESS OTHERWISE SHOWN.

LIGHTING

SCALE 1:500

E-5

APPROVED FOR ELECTRICAL WORK ONLY

NY	12-22-11	REVISED BY	DATE REVISED
BRIAN CHOW	JAGTAR DHALIWAL	CALCULATED-DESIGNED BY	CHECKED BY
FUNCTIONAL SUPERVISOR	NELSON LEE		

STATE OF CALIFORNIA - DEPARTMENT OF TRANSPORTATION
Caltrans
OFFICE OF ELECTRICAL DESIGN
SACRAMENTO

LAST REVISION 1-25-12 | DATE PLOTTED => 27-JAN-2012 | TIME PLOTTED => 13:29

Dist	COUNTY	ROUTE	KILOMETER POST TOTAL PROJECT	SHEET No.	TOTAL SHEETS
01	Men	101	R69.4/R78.9	534	939

Normanye 12-27-11
REGISTERED ELECTRICAL ENGINEER

1-23-12
PLANS APPROVAL DATE

REGISTERED PROFESSIONAL ENGINEER NORMAN S. YE No. 16913 Exp. 6-30-13 ELECTRICAL STATE OF CALIFORNIA

THE STATE OF CALIFORNIA OR ITS OFFICERS OR AGENTS SHALL NOT BE RESPONSIBLE FOR THE ACCURACY OR COMPLETENESS OF ELECTRONIC COPIES OF THIS PLAN SHEET.

Caltrans Metric

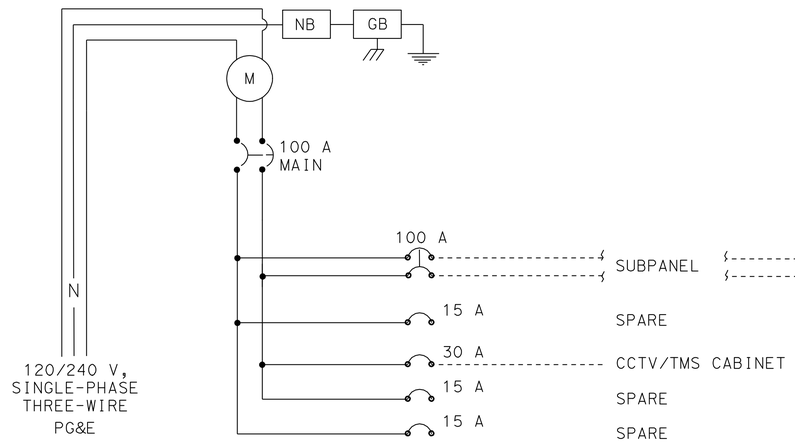

SERVICE WIRING DIAGRAM

CTID No. 01101010043820

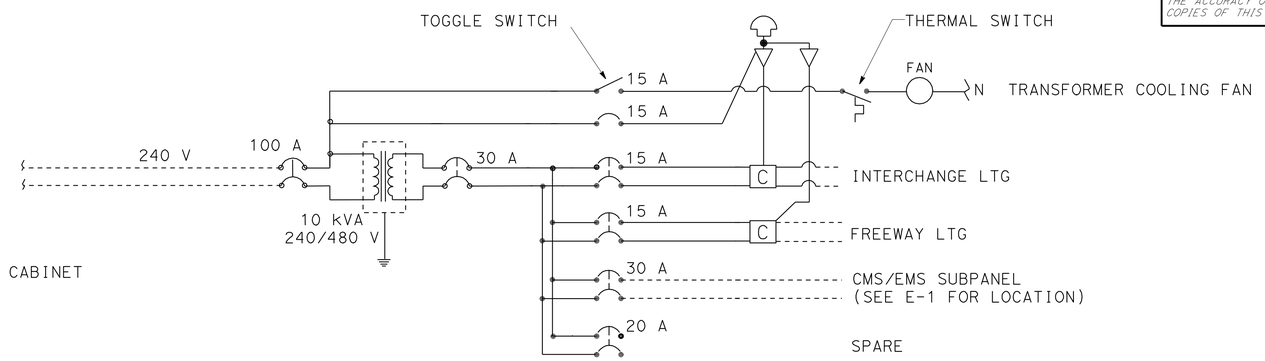

SUBPANEL WIRING DIAGRAM

INSTALL LABEL BY LAMINATED ENGRAVED PLASTIC WITH MINIMUM ¼" LETTER FASTENED WITH MINIMUM OF FOUR ¼", #4-40 MACHINE SCREWS.

1. SUBPANEL (480 V(ac))
2. CAUTIONS:
   TURN OFF MAIN BREAKER (100 A) BEFORE WORKING ON 480 V EQUIPMENT
   DUE TO SUBPANEL (480 V) SHARES THE SAME CONDUIT RUNS WITH CCTV/TMS CABINET(120 V)

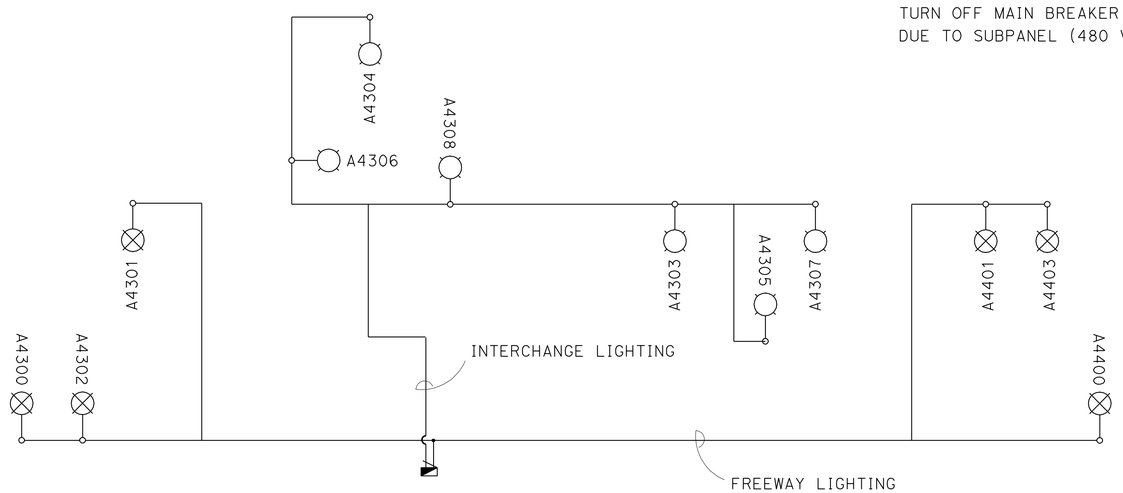

LIGHTING CIRCUIT DIAGRAM

CTID No. 01101010043820

APPROVED FOR ELECTRICAL WORK ONLY

ELECTRICAL (DETAILS)

NO SCALE

E-6

NY	12-22-11
REVISED BY	DATE REVISED
BRIAN CHOW	JAGTAR DHALIWAL
CALCULATED-DESIGNED BY	CHECKED BY
FUNCTIONAL SUPERVISOR	NELSON LEE

STATE OF CALIFORNIA - DEPARTMENT OF TRANSPORTATION
Caltrans
OFFICE OF ELECTRICAL DESIGN
SACRAMENTO

LAST REVISION 1-25-12
DATE PLOTTED => 27-JAN-2012
TIME PLOTTED => 13:29

Dist	COUNTY	ROUTE	KILOMETER POST TOTAL PROJECT	SHEET No.	TOTAL SHEETS
01	Men	101	R69.4/R78.9	535	939

Normanye 12-27-11
REGISTERED ELECTRICAL ENGINEER

1-23-12
PLANS APPROVAL DATE

REGISTERED PROFESSIONAL ENGINEER NORMAN S. YE No. 16913 Exp. 6-30-13 ELECTRICAL STATE OF CALIFORNIA

THE STATE OF CALIFORNIA OR ITS OFFICERS OR AGENTS SHALL NOT BE RESPONSIBLE FOR THE ACCURACY OR COMPLETENESS OF ELECTRONIC COPIES OF THIS PLAN SHEET.

NOTE: FOR COMPLETE RIGHT OF WAY AND ACCURATE ACCESS DATA, SEE RIGHT OF WAY RECORD MAPS AT DISTRICT OFFICE.

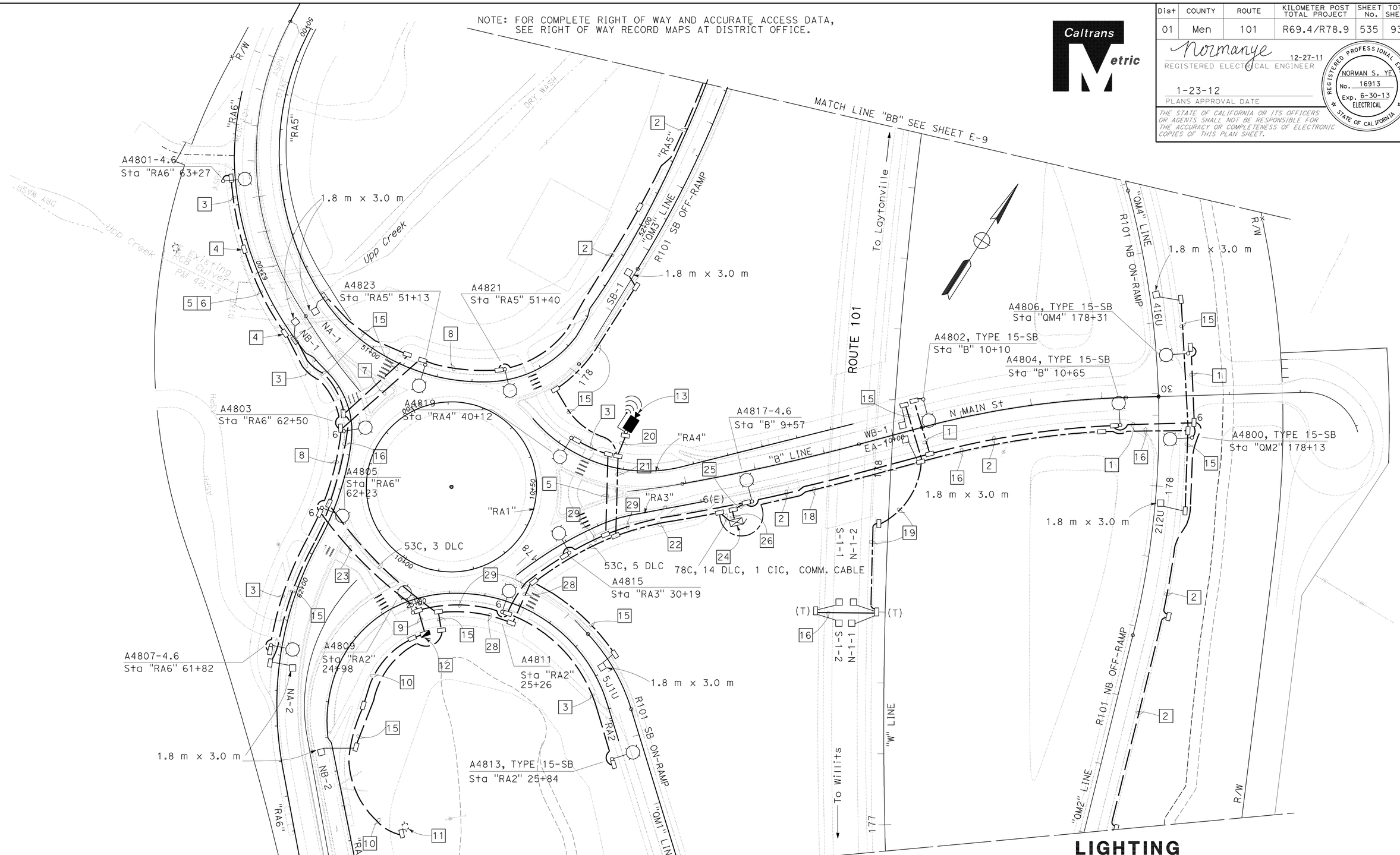

PROJECT NOTES:

(SEE SHEET E-8)

APPROVED FOR ELECTRICAL WORK ONLY

ALL DIMENSIONS ARE IN METERS UNLESS OTHERWISE SHOWN.

LIGHTING
CLOSED CIRCUIT TELEVISION SYSTEM
TRAFFIC MONITORING STATION
TMS FIELD ELEMENT COMMUNICATION SYSTEM

SCALE: 1:500

E-7

STATE OF CALIFORNIA - DEPARTMENT OF TRANSPORTATION
Caltrans
OFFICE OF ELECTRICAL DESIGN
SACRAMENTO

FUNCTIONAL SUPERVISOR: NELSON LEE
CALCULATED-DESIGNED BY: YOUNG TON
CHECKED BY: JAGTAR DHALIWAL
REVISED BY: NY
DATE REVISED: 12-22-11

LAST REVISION 1-25-12
DATE PLOTTED => 27-JAN-2012
TIME PLOTTED => 13:29

Dist	COUNTY	ROUTE	KILOMETER POST TOTAL PROJECT	SHEET No.	TOTAL SHEETS
01	Men	101	R69.4/R78.9	536	939

Normanye 12-27-11
REGISTERED ELECTRICAL ENGINEER

1-23-12
PLANS APPROVAL DATE

REGISTERED PROFESSIONAL ENGINEER NORMAN S. YE No. 16913 Exp. 6-30-13 ELECTRICAL STATE OF CALIFORNIA

THE STATE OF CALIFORNIA OR ITS OFFICERS OR AGENTS SHALL NOT BE RESPONSIBLE FOR THE ACCURACY OR COMPLETENESS OF ELECTRONIC COPIES OF THIS PLAN SHEET.

Caltrans Metric

NOTE: FOR COMPLETE RIGHT OF WAY AND ACCURATE ACCESS DATA, SEE RIGHT OF WAY RECORD MAPS AT DISTRICT OFFICE.

PROJECT NOTES: (SHEET E-7 AND E-8)

1. 78C, 2#6 (480 V, FI LGT)
2. 53C, 2#6 (480 V, FI LGT)
3. 53C, 2#8 (480 V, RO LGT)
4. SEE DETAIL "I" Std PLANS ES-9A FOR CONDUIT TERMINATION.
5. 53C, 2#8 (480 V, LIGHT)
6. SEE STRUCTURE PLANS BRIDGE No. 10-0305, SHEET 8 OF 13, FOR CONDUIT INSTALLATION.
7. 53C, 2#8 (480 V, RO LGT), 2#6 (480 V, FI LGT)
8. 53C, 2#8 (480 V, RO LGT), 2#6 (480 V, FI LGT)
9. 53C, 2#8 (480 V, RO LGT), 2#6 (480 V, FI LGT), 2#8 (120 V, CCTV/TMS).
10. 53C, TYPE 3, SCHEDULE 40, MT. CONDUCTORS WILL BE INSTALLED AND SPLICED BY PG&E.
11. INSTALL TYPE PG&E RISER FOR PG&E.
12. INSTALL TYPE III-DF SERVICE EQUIPMENT ENCLOSURE (277/480 V, 4-WIRE, 3-PHASE), CTID No. 01101010048000
    FOR SERVICE WIRING DIAGRAM, SEE DETAIL "M" SHEET E-11.
    FOR LIGHTING CIRCUIT DIAGRAM, SEE DETAIL SHEET E-11.
    SEE DETAIL "K" FOR FOUNDATION DETAILS, SHEET E-13.
    LOAD: 6-310 W HPS LUMINAIRES
    16-200 W HPS LUMINAIRES
    3000 W CCTV/TMS

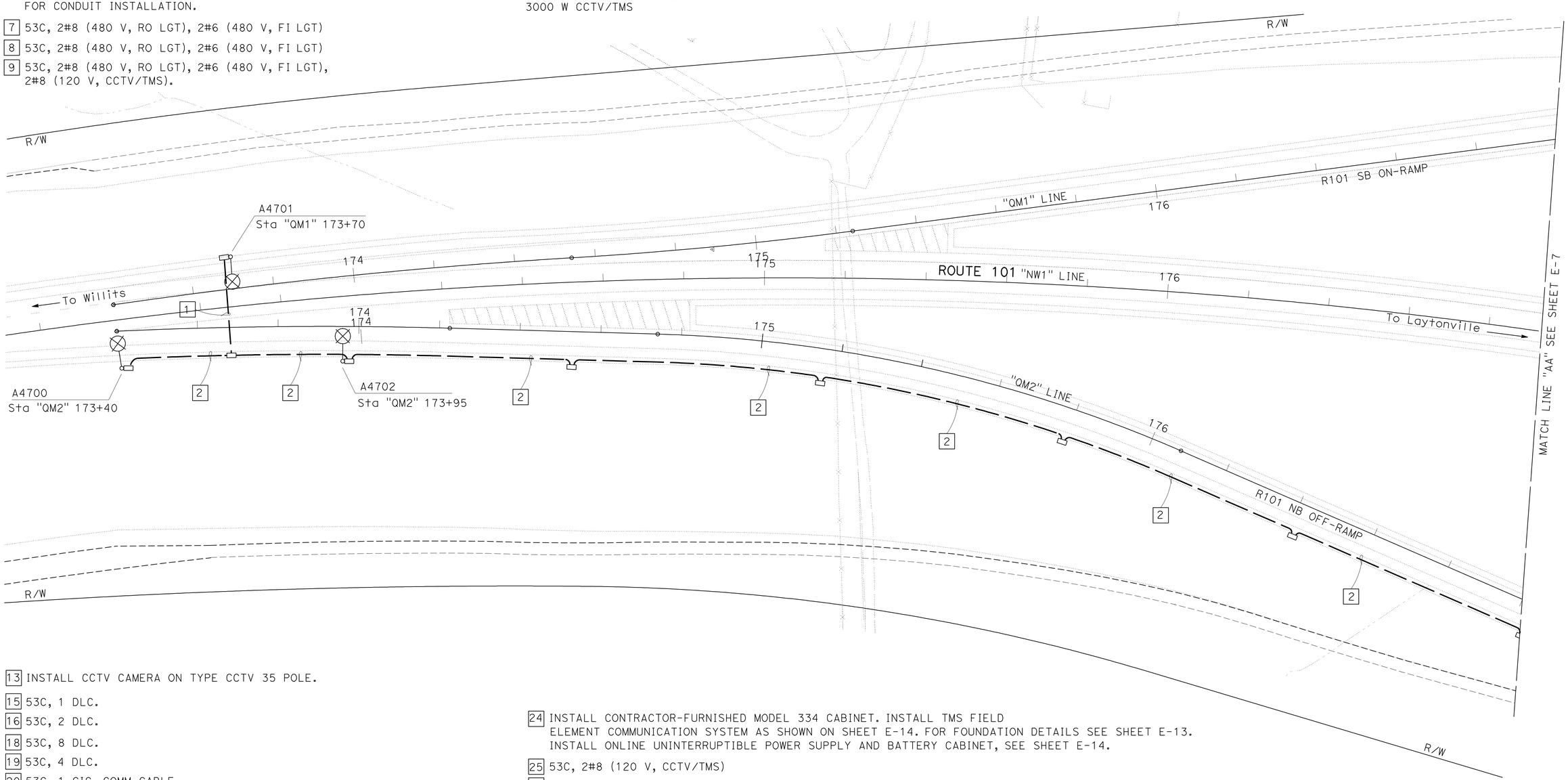

13. INSTALL CCTV CAMERA ON TYPE CCTV 35 POLE.
15. 53C, 1 DLC.
16. 53C, 2 DLC.
18. 53C, 8 DLC.
19. 53C, 4 DLC.
20. 53C, 1 CIC, COMM CABLE
21. 53C, 1 CIC, 1 DLC, COMM CABLE
22. 53C, 1 CIC, 6 DLC, COMM CABLE
23. 53C, 2#8 (480 V, RO LGT), 2#6 (480 V, F1 LGT)
24. INSTALL CONTRACTOR-FURNISHED MODEL 334 CABINET. INSTALL TMS FIELD ELEMENT COMMUNICATION SYSTEM AS SHOWN ON SHEET E-14. FOR FOUNDATION DETAILS SEE SHEET E-13. INSTALL ONLINE UNINTERRUPTIBLE POWER SUPPLY AND BATTERY CABINET, SEE SHEET E-14.
25. 53C, 2#8 (120 V, CCTV/TMS)
26. 1-78C, 2#8 (120 V, CCTV/TMS).
28. 53C, 4 DLC.
29. 53C, 2#8 (480 V, RO LGT), 2#6 (480 V, FI LGT), 2#8 (120 V, CCTV/TMS).

APPROVED FOR ELECTRICAL WORK ONLY

ALL DIMENSIONS ARE IN METERS UNLESS OTHERWISE SHOWN.

LIGHTING

SCALE: 1:500

E-8

NY	12-22-11	REVISED BY / DATE REVISED
YOUNG TON	JAGTAR DHALIWAL	CALCULATED-DESIGNED BY / CHECKED BY
NELSON LEE		FUNCTIONAL SUPERVISOR

STATE OF CALIFORNIA - DEPARTMENT OF TRANSPORTATION
Caltrans OFFICE OF ELECTRICAL DESIGN SACRAMENTO

LAST REVISION 1-25-12 | DATE PLOTTED => 27-JAN-2012 | TIME PLOTTED => 13:29

Dist	COUNTY	ROUTE	KILOMETER POST TOTAL PROJECT	SHEET No.	TOTAL SHEETS
01	Men	101	R69.4/R78.9	537	939

Normanye 12-27-11
REGISTERED ELECTRICAL ENGINEER

1-23-12
PLANS APPROVAL DATE

REGISTERED PROFESSIONAL ENGINEER NORMAN S. YE No. 16913 Exp. 6-30-13 ELECTRICAL STATE OF CALIFORNIA

THE STATE OF CALIFORNIA OR ITS OFFICERS OR AGENTS SHALL NOT BE RESPONSIBLE FOR THE ACCURACY OR COMPLETENESS OF ELECTRONIC COPIES OF THIS PLAN SHEET.

Caltrans Metric

NOTE: FOR COMPLETE RIGHT OF WAY AND ACCURATE ACCESS DATA, SEE RIGHT OF WAY RECORD MAPS AT DISTRICT OFFICE.

PROJECT NOTES: (THIS SHEET ONLY)

1. 53C, 2#6 (480 V, FI LGT).
2. 78C, 2#6 (480 V, FI LGT).
3. SEE DETAIL "I" Std PLANS RSP ES-9A FOR CONDUIT TERMINATION.
4. SEE STRUCTURE PLANS BRIDGE No. 10-0147K, SHEET 7 OF 15 FOR CONDUIT INSTALLATION.
5. Exist EMS AND FLASHING BEACONS SHALL REMAIN.
6. Exist 41C, 2#8.
7. FOR CONTINUATION, SEE SHEET E-10.
8. Exist 53C, 2#8.

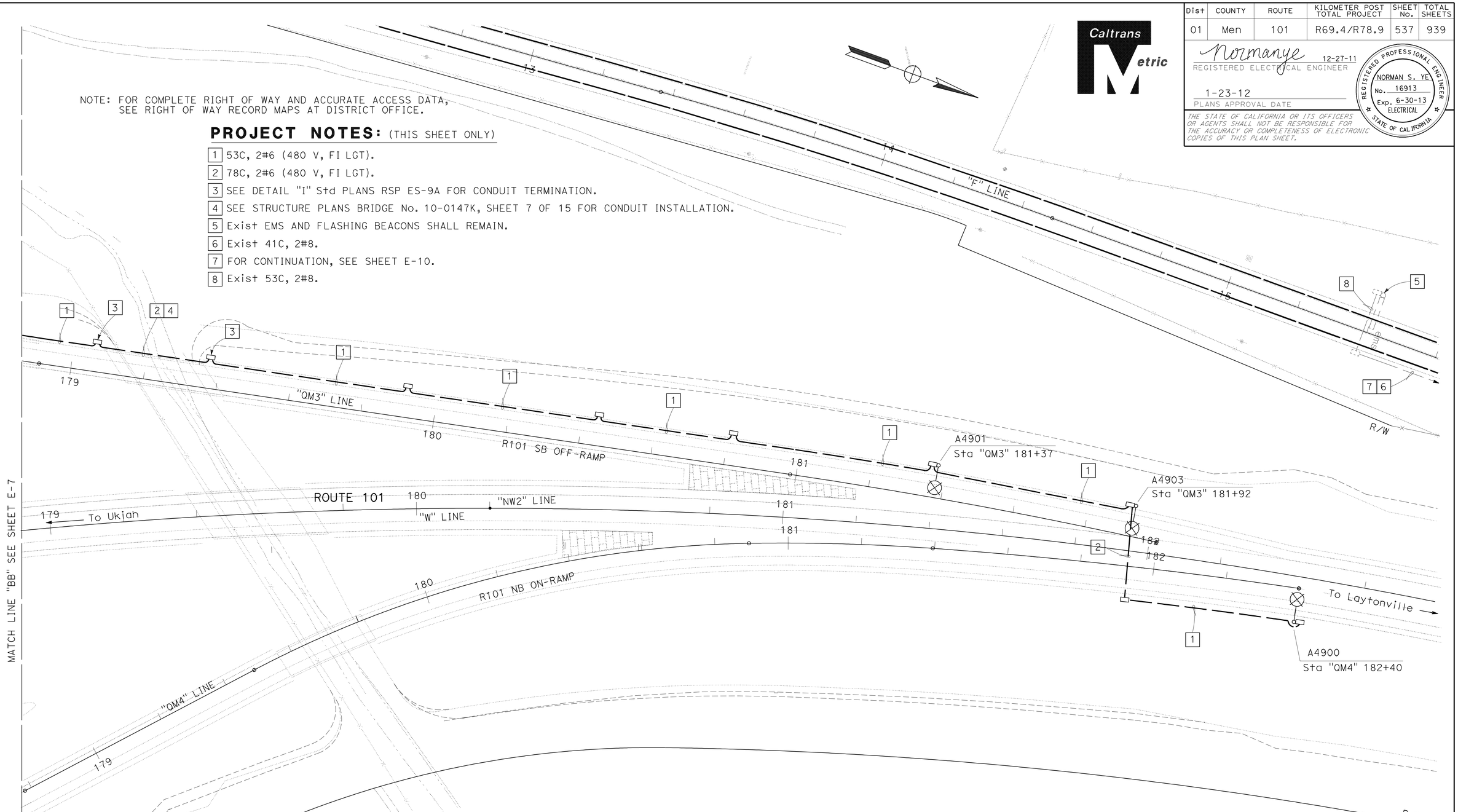

ALL DIMENSIONS ARE IN METERS UNLESS OTHERWISE SHOWN.

LIGHTING

SCALE: 1:500

E-9

APPROVED FOR ELECTRICAL WORK ONLY

STATE OF CALIFORNIA - DEPARTMENT OF TRANSPORTATION
Caltrans OFFICE OF ELECTRICAL DESIGN SACRAMENTO

FUNCTIONAL SUPERVISOR: NELSON LEE
CALCULATED-DESIGNED BY: JAGTAR DHALIWAL
CHECKED BY: YOUNG TON
REVISED BY: NY
DATE REVISED: 12-22-11

LAST REVISION 1-25-12
DATE PLOTTED => 27-JAN-2012
TIME PLOTTED => 13:30

Dist	COUNTY	ROUTE	KILOMETER POST TOTAL PROJECT	SHEET No.	TOTAL SHEETS
01	Men	101	R69.4/R78.9	538	939

Normanye 12-27-11
REGISTERED ELECTRICAL ENGINEER

1-23-12
PLANS APPROVAL DATE

REGISTERED PROFESSIONAL ENGINEER NORMAN S. YE No. 16913 Exp. 6-30-13 ELECTRICAL STATE OF CALIFORNIA

THE STATE OF CALIFORNIA OR ITS OFFICERS OR AGENTS SHALL NOT BE RESPONSIBLE FOR THE ACCURACY OR COMPLETENESS OF ELECTRONIC COPIES OF THIS PLAN SHEET.

Caltrans Metric

NOTE: FOR COMPLETE RIGHT OF WAY AND ACCURATE ACCESS DATA, SEE RIGHT OF WAY RECORD MAPS AT DISTRICT OFFICE.

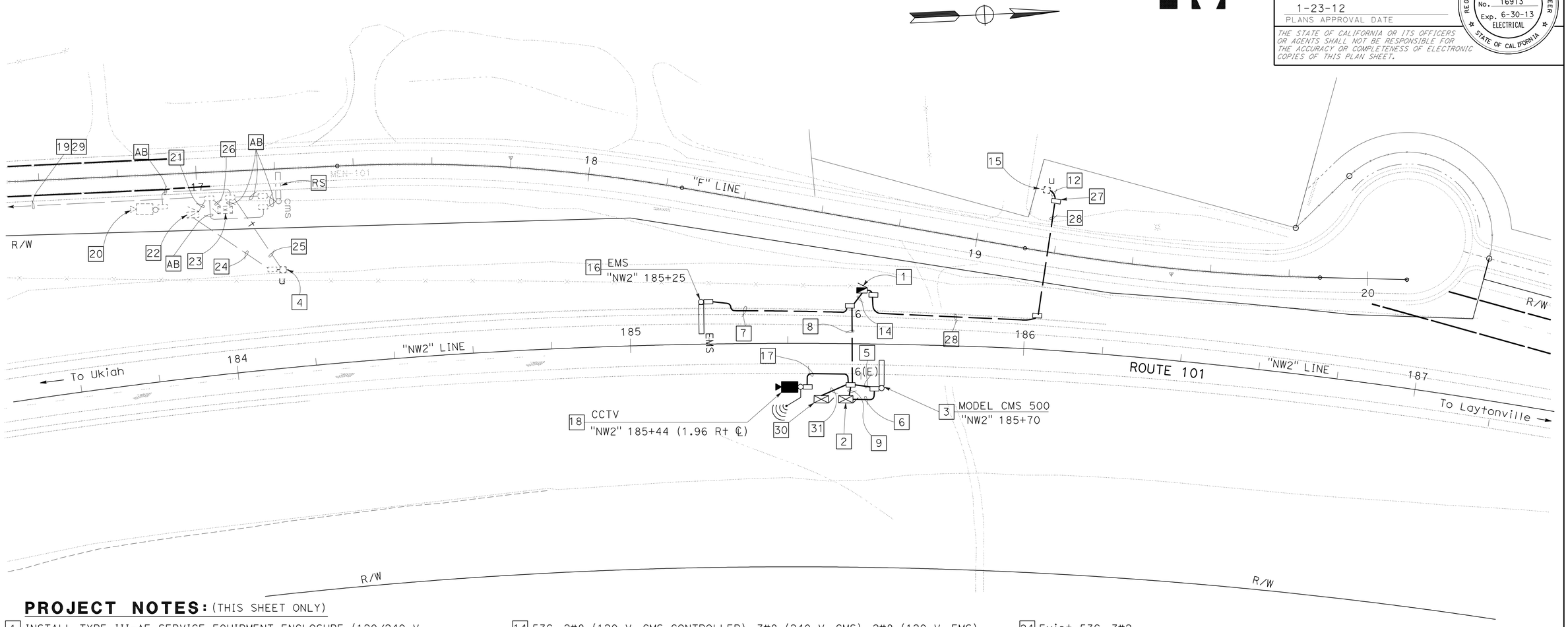

PROJECT NOTES: (THIS SHEET ONLY)

1. INSTALL TYPE III-AF SERVICE EQUIPMENT ENCLOSURE (120/240 V, 1-PHASE, 3-WIRE). CTID No. 01101010048920. FOR SERVICE WIRING DIAGRAM, SEE DETAIL "N" SHEET E-11. FOR FOUNDATION DETAILS, SEE DETAIL "L" SHEET E-13.
   LOAD:
   3000 W CMS
   500 W EMS
   3000 W CCTV
2. INSTALL STATE-FURNISHED MODEL 334 CONTROLLER CABINET WITH MODEL 170 CONTROLLER FOR CMS. SEE ES-3C FOR FOUNDATION. COIL 1.8 m OF HARNESS #4 AND #5 IN CABINET.
3. INSTALL STATE-FURNISHED MODEL 500 LED CMS ON FULL CANTILIVER SIGN STRUCTURE. FOR FOUNDATION DETAILS, SEE STANDARD PLANS S-116.
4. Exist PG&E AND AT&T SERVICE POLE.
5. 53C, 3#8 (240 V, CMS).
6. 53C, 1 CMS HARNESS #4 AND HARNESS #5.
7. 53C, 2#8 (120 V, EMS), 2#8 (120 V EMS CONTROL).
8. 53C, 2#8 (120 V, CMS CONTROLLER), 3#8 (240 V, CMS), 2#8 (120 V, EMS CONTROL), 2#8 (120 V, CCTV).
9. 78C, 2#8 (120 V, CMS CONTROLLER), 2#8 (120 V, EMS CONTROL), 2 COMM CABLE
12. 53C, TYPE 3, SCHEDULE 40, MT. CONDUCTORS TO BE INSTALLED AND SPLICED BY PG&E.
14. 53C, 2#8 (120 V, CMS CONTROLLER), 3#8 (240 V, CMS), 2#8 (120 V, EMS), 2#8(120 V, CCTV)
15. INSTALL TYPE PG&E RISER FOR PG&E.
16. INSTALL EMS WITH FLASHING BEACONS, SEE Std PLANS RSP ES-14C.
17. 53C, 1 CIC, COMM CABLE.
18. INSTALL CCTV CAMERA (RELOCATED FROM Exist LOCATION, SEE THIS SHEET), ON TYPE CCTV 35 POLE.
19. Exist 41C, 2#8 (cms).
20. RS Exist CCTV POLE CAMERA. RELOCATE CCTV CAMERA TO NEW LOCATION. SEE THIS SHEET.
21. Exist 78C, 4#8, 3#6. RC 2#8, 3#6.
22. Exist TYPE III-AF SERVICE EQUIPMENT ENCLOSURE, CTID No. 01101010048500.
    LOAD AFTER MODIFICATION:
    500 W EMS
23. Exist MODEL 334 CABINET. REMOVE AND REINSTALL CCTV EQUIPMENT TO NEW LOCATION. SEE THIS SHEET.
24. Exist 53C, 3#2.
25. Exist 53C, 1 TELEPHONE CABLE.
26. Exist 53C, 2#8.
27. INSTALL PG&E SPECIFIED PULL BOX.
28. 53C, 3#2.
29. FOR CONTINUATION, SEE SHEET E-9.
30. INSTALL CONTRACTOR-FURNISHED MODEL 334 CABINET. INSTALL TMS FIELD ELEMENT COMMUNICATION SYSTEM AS SHOWN ON SHEET E-15. FOR FOUNDATION DETAILS SEE SHEET E-13. INSTALL ONLINE UNINTERRUPTIBLE POWER SUPPLY AND BATTERY CABINET, SEE SHEET E-15.
31. 53C, 2#8 (120 V CCTV), 1 CIC, 3 COMM CABLE.

ALL DIMENSIONS ARE IN METERS UNLESS OTHERWISE SHOWN.

APPROVED FOR ELECTRICAL WORK ONLY

EXTINGUISHABLE MESSAGE SIGN SYSTEM
CHANGEABLE MESSAGE SIGN SYSTEM
CLOSED CIRCUIT TELEVISION SYSTEM
TMS FIELD ELEMENT COMMUNICATION SYSTEM

SCALE: 1:500

E-10

FUNCTIONAL SUPERVISOR	CALCULATED-DESIGNED BY	CHECKED BY	REVISED BY	DATE REVISED
NELSON LEE	YOUNG TON	JAGTAR DHALIWAL	NY	12-22-11

STATE OF CALIFORNIA - DEPARTMENT OF TRANSPORTATION
Caltrans OFFICE OF ELECTRICAL DESIGN SACRAMENTO

LAST REVISION 1-25-12 | DATE PLOTTED => 27-JAN-2012 | TIME PLOTTED => 13:30

Dist	COUNTY	ROUTE	KILOMETER POST TOTAL PROJECT	SHEET No.	TOTAL SHEETS
01	Men	101	R69.4/R78.9	539	939

Caltrans Metric

Normanye 12-27-11
REGISTERED ELECTRICAL ENGINEER

1-23-12
PLANS APPROVAL DATE

REGISTERED PROFESSIONAL ENGINEER NORMAN S. YE No. 16913 Exp. 6-30-13 ELECTRICAL STATE OF CALIFORNIA

THE STATE OF CALIFORNIA OR ITS OFFICERS OR AGENTS SHALL NOT BE RESPONSIBLE FOR THE ACCURACY OR COMPLETENESS OF ELECTRONIC COPIES OF THIS PLAN SHEET.

NOTE: FOR COMPLETE RIGHT OF WAY AND ACCURATE ACCESS DATA, SEE RIGHT OF WAY RECORD MAPS AT DISTRICT OFFICE.

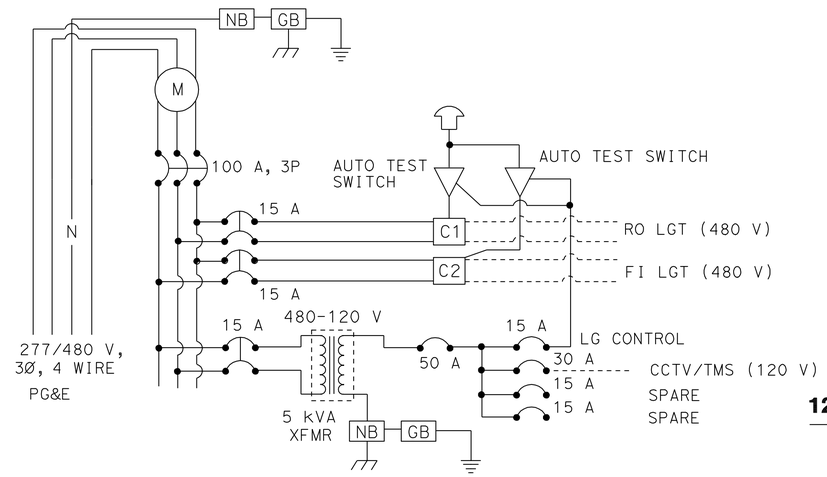

277/480 V SERVICE WIRING DIAGRAM

CTID No. 01101010048000

DETAIL "M"

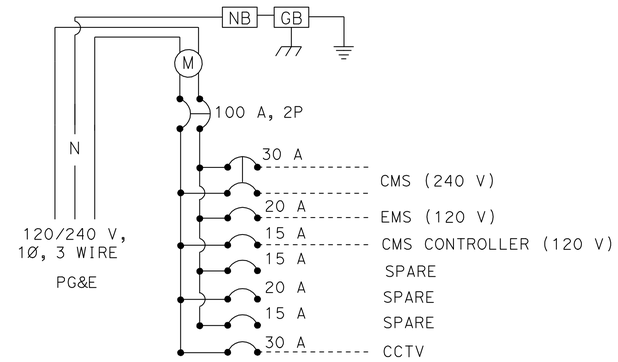

120/240 V SERVICE WIRING DIAGRAM

CTID No. 01101010048920

DETAIL "N"

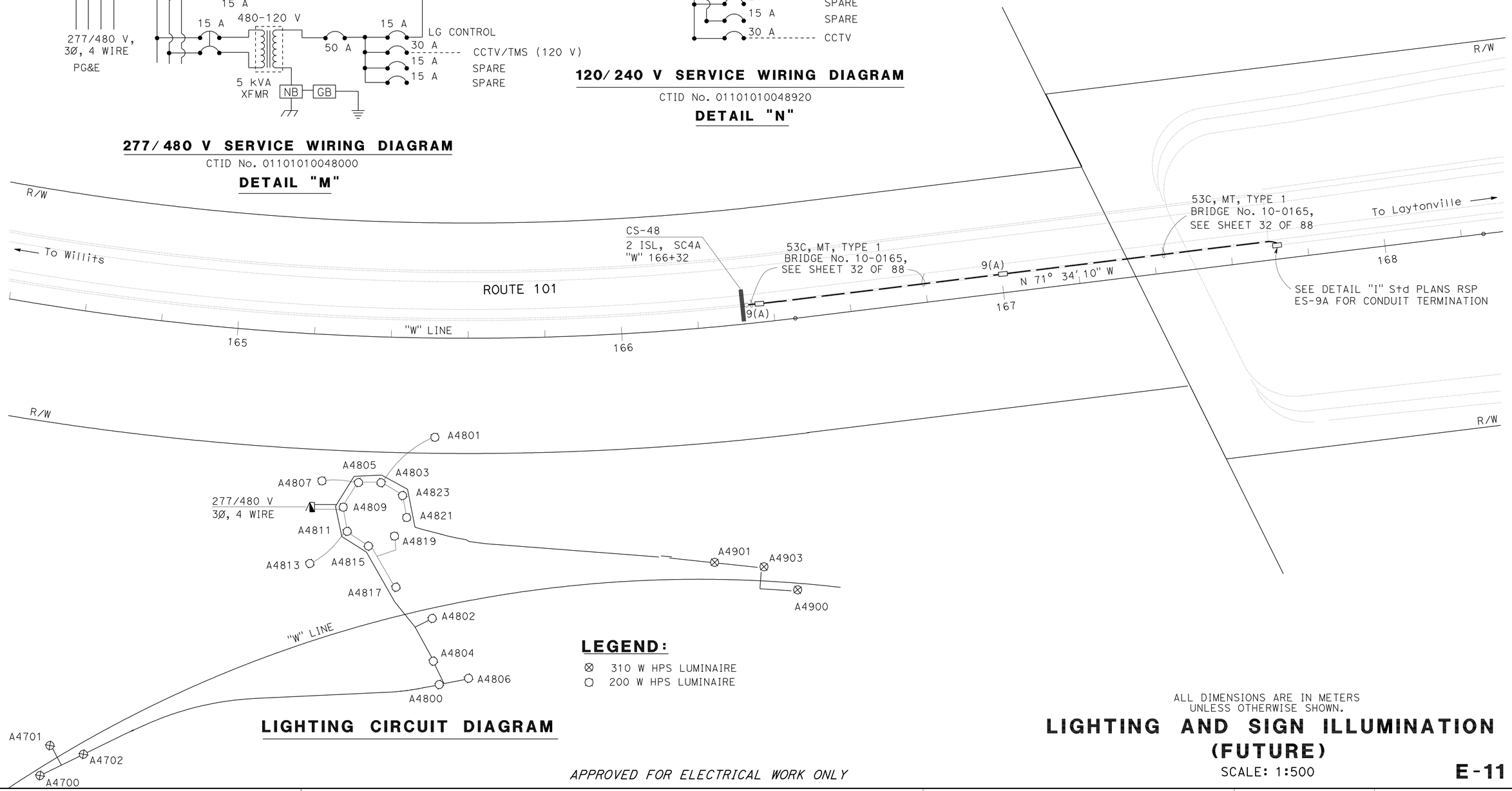

LIGHTING CIRCUIT DIAGRAM

LEGEND:

⊗ 310 W HPS LUMINAIRE

○ 200 W HPS LUMINAIRE

ALL DIMENSIONS ARE IN METERS UNLESS OTHERWISE SHOWN.

LIGHTING AND SIGN ILLUMINATION (FUTURE)

SCALE: 1:500

E-11

APPROVED FOR ELECTRICAL WORK ONLY

NY	12-15-11
REVISED BY	DATE REVISED
YOUNG TON	JAGTAR DHALIWAL
CALCULATED-DESIGNED BY	CHECKED BY
FUNCTIONAL SUPERVISOR	NELSON LEE

STATE OF CALIFORNIA - DEPARTMENT OF TRANSPORTATION
Caltrans
OFFICE OF ELECTRICAL DESIGN
SACRAMENTO

LAST REVISION 1-25-12 | DATE PLOTTED => 27-JAN-2012 | TIME PLOTTED => 13:30

Dist	COUNTY	ROUTE	KILOMETER POST TOTAL PROJECT	SHEET No.	TOTAL SHEETS
01	Men	101	R69.4/R78.9	540	939

Caltrans Metric

Normanye 9-27-11
REGISTERED ELECTRICAL ENGINEER

1-23-12
PLANS APPROVAL DATE

REGISTERED PROFESSIONAL ENGINEER
NORMAN S. YE
No. 16913
Exp. 6-30-13
ELECTRICAL
STATE OF CALIFORNIA

THE STATE OF CALIFORNIA OR ITS OFFICERS OR AGENTS SHALL NOT BE RESPONSIBLE FOR THE ACCURACY OR COMPLETENESS OF ELECTRONIC COPIES OF THIS PLAN SHEET.

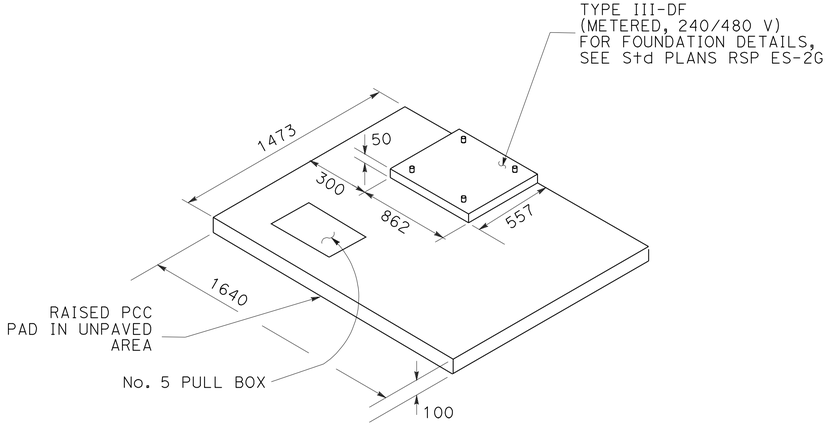

DETAIL "K"

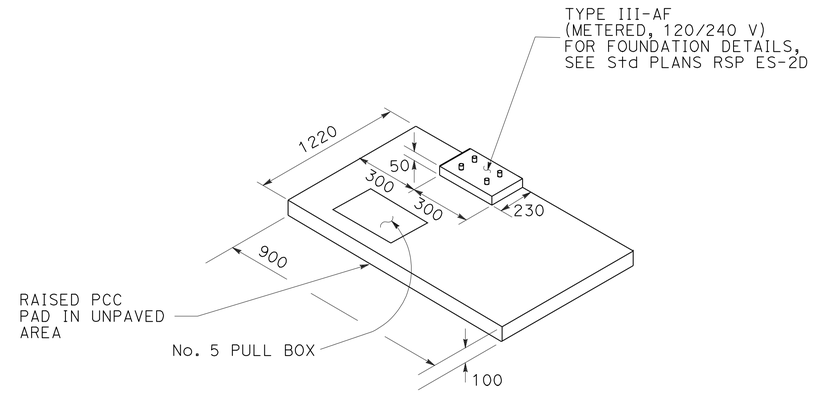

DETAIL "L"

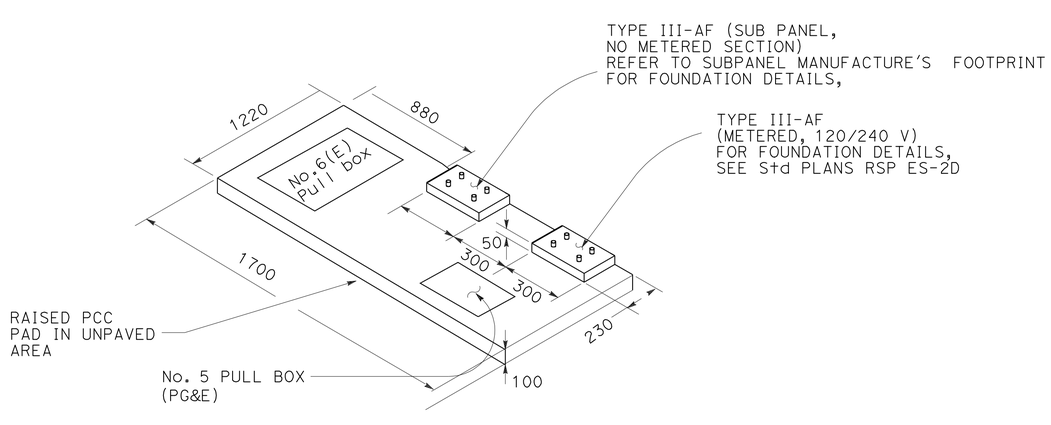

DETAIL "I"

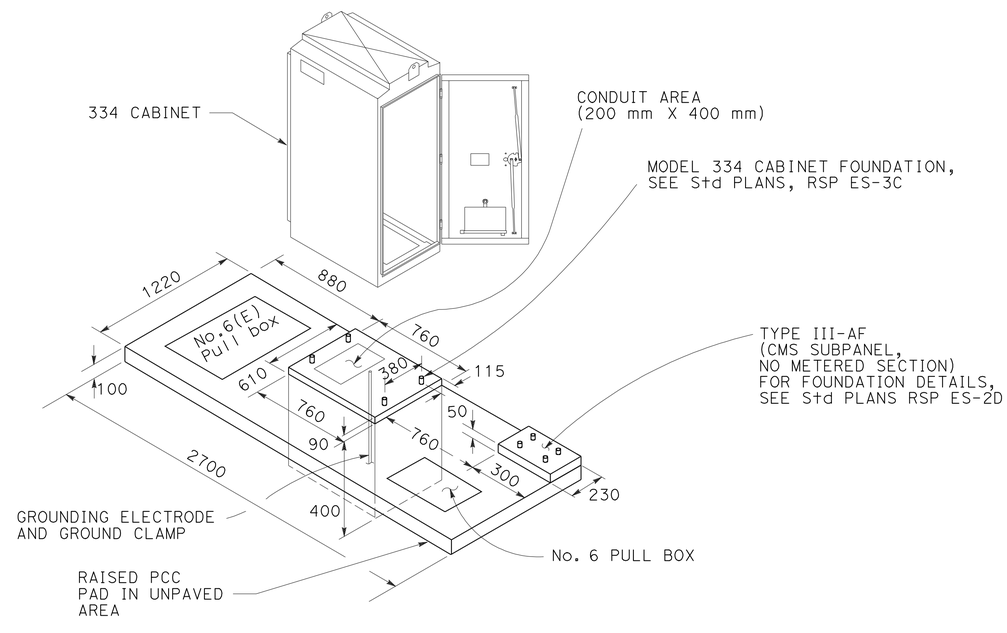

DETAIL "J"

ALL DIMENSIONS ARE IN MILLIMETERS
UNLESS OTHERWISE SHOWN.

ELECTRICAL DETAILS
(FOUNDATION DETAILS)

NO SCALE

APPROVED FOR ELECTRICAL WORK ONLY

E-12

NY	9-27-11
REVISED BY	DATE REVISED
YOUNG TON	JAGTAR DHALIWAL
CALCULATED-DESIGNED BY	CHECKED BY
FUNCTIONAL SUPERVISOR	NELSON LEE

STATE OF CALIFORNIA - DEPARTMENT OF TRANSPORTATION
Caltrans
OFFICE OF ELECTRICAL DESIGN
SACRAMENTO

LAST REVISION 1-25-12
DATE PLOTTED => 27-JAN-2012
TIME PLOTTED => 13:30

Dist	COUNTY	ROUTE	KILOMETER POST TOTAL PROJECT	SHEET No.	TOTAL SHEETS
01	Men	101	R69.4/R78.9	541	939

Caltrans Metric

Normanye 9-27-11
REGISTERED ELECTRICAL ENGINEER

1-23-12
PLANS APPROVAL DATE

REGISTERED PROFESSIONAL ENGINEER NORMAN S. YE No. 16913 Exp. 6-30-13 ELECTRICAL STATE OF CALIFORNIA

THE STATE OF CALIFORNIA OR ITS OFFICERS OR AGENTS SHALL NOT BE RESPONSIBLE FOR THE ACCURACY OR COMPLETENESS OF ELECTRONIC COPIES OF THIS PLAN SHEET.

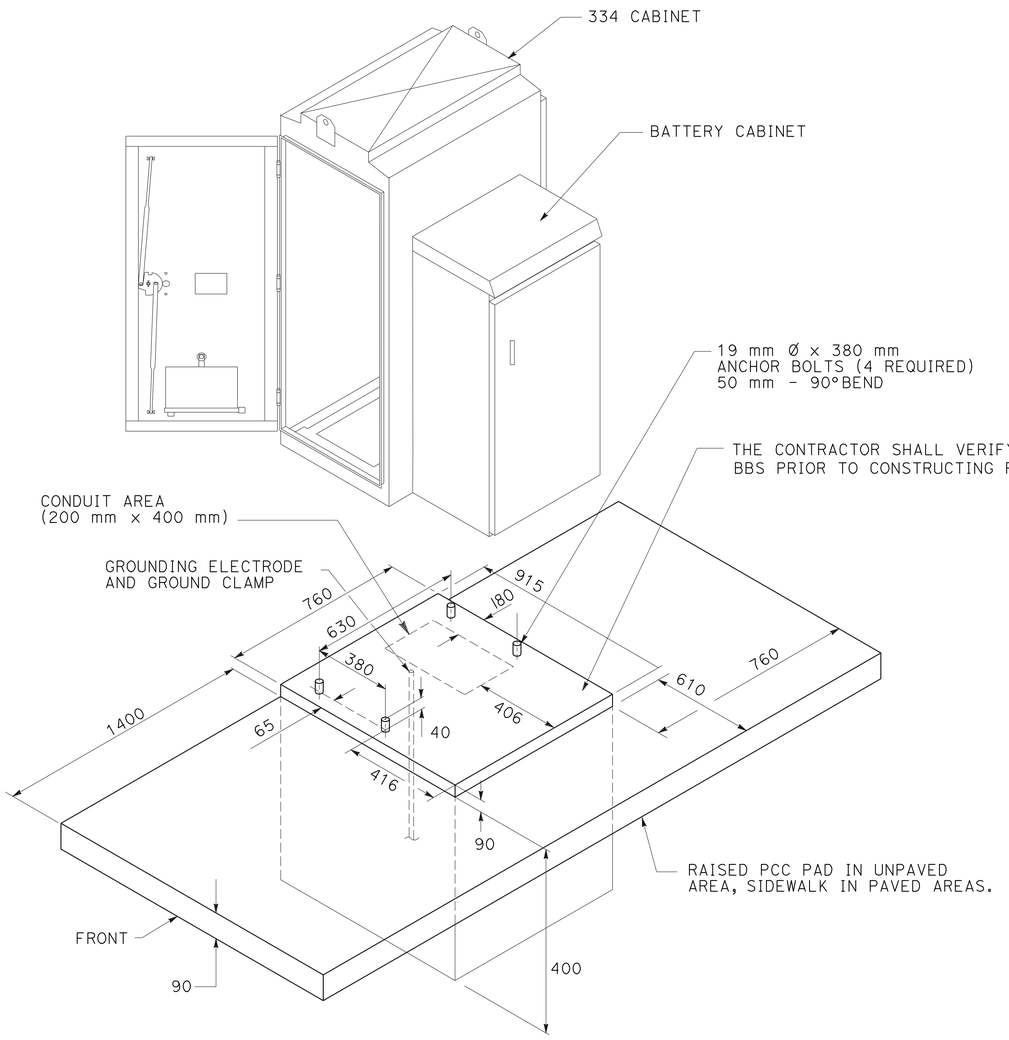

FOUNDATION DETAILS FOR BATTERY CABINET

(SEE Std PLANS RSP ES-3C FOR STANDARD FOUNDATION DETAILS)

NOTES:

1. THE BATTERY CABINET SHALL BE MOUNTED TO THE MODEL 334 CABINET WITH EIGHT 25 mm Ø STAINLESS STEEL BOLTS, TWO 25 mm Ø STAINLESS STEEL ROUND FLAT WASHERS AND ONE STAINLESS STEEL SCREW SIZE K-LOCK HEX NUT. THE LOCATION OF THE BOLTS WILL BE DETERMINED BY THE ENGINEER.

2. THE POWER OF COOLING FAN FOR THE BATTERY CABINET SHALL BE TAPPED FROM THE BOTTOM OF THE TB 334 CABINET.

3. THE COOLING FAN SHALL BE AUTOMATICALLY CONTROLLED BY THERMAL SWITCH.

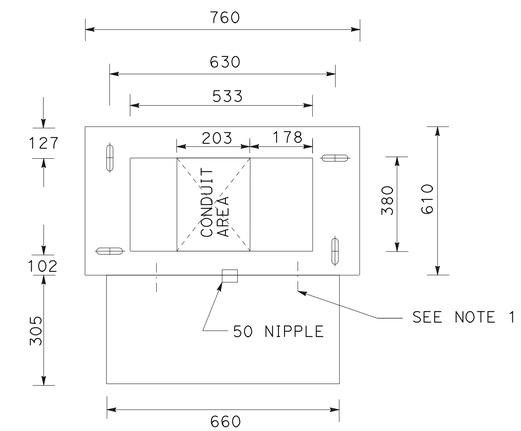

BASE PLAN FOR BATTERY CABINET AND 334 CABINET

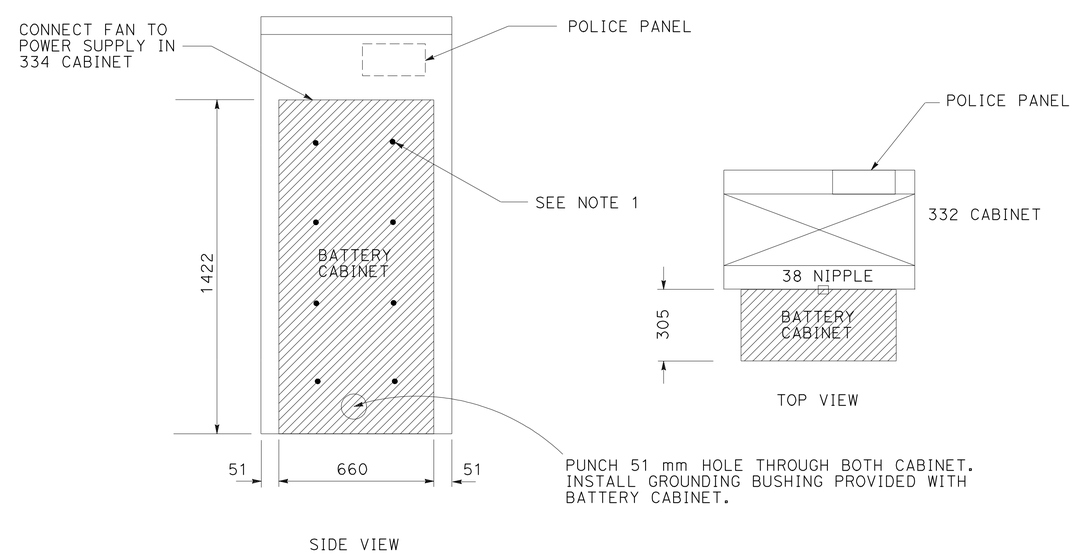

ALL DIMENSIONS ARE IN MILLIMETERS
UNLESS OTHERWISE SHOWN.

ELECTRICAL DETAILS
(BATTERY CABINET FOUNDATION)

NO SCALE

E-13

APPROVED FOR ELECTRICAL WORK ONLY

STATE OF CALIFORNIA - DEPARTMENT OF TRANSPORTATION
Caltrans
OFFICE OF ELECTRICAL DESIGN
SACRAMENTO

FUNCTIONAL SUPERVISOR: NELSON LEE
CALCULATED-DESIGNED BY: YOUNG TON
CHECKED BY: JAGTAR DHALIWAL
REVISED BY: NY
DATE REVISED: 9-27-11

LAST REVISION 1-25-12
DATE PLOTTED => 27-JAN-2012
TIME PLOTTED => 13:30

NOTES:
1. ALL 5 V(dc) and 12 V(dc) CONDUCTORS ARE SIZE 12 AWG.
   ALL 24 V(dc) CONDUCTORS ARE SIZE 8 AWG, EXCEPT WHERE NOTED.
2. MOUNT THESE ITEMS IN MODEL 334 CABINET FOR CMS/EMS.

Dist	COUNTY	ROUTE	KILOMETER POST TOTAL PROJECT	SHEET No.	TOTAL SHEETS
01	Men	101	R69.4/R78.9	542	939

REGISTERED CIVIL ENGINEER
1-23-12
PLANS APPROVAL DATE

REGISTERED PROFESSIONAL ENGINEER John P. Carson No. 53141 Exp. 6/30/13 CIVIL STATE OF CALIFORNIA

THE STATE OF CALIFORNIA OR ITS OFFICERS OR AGENTS SHALL NOT BE RESPONSIBLE FOR THE ACCURACY OR COMPLETENESS OF ELECTRONIC COPIES OF THIS PLAN SHEET.

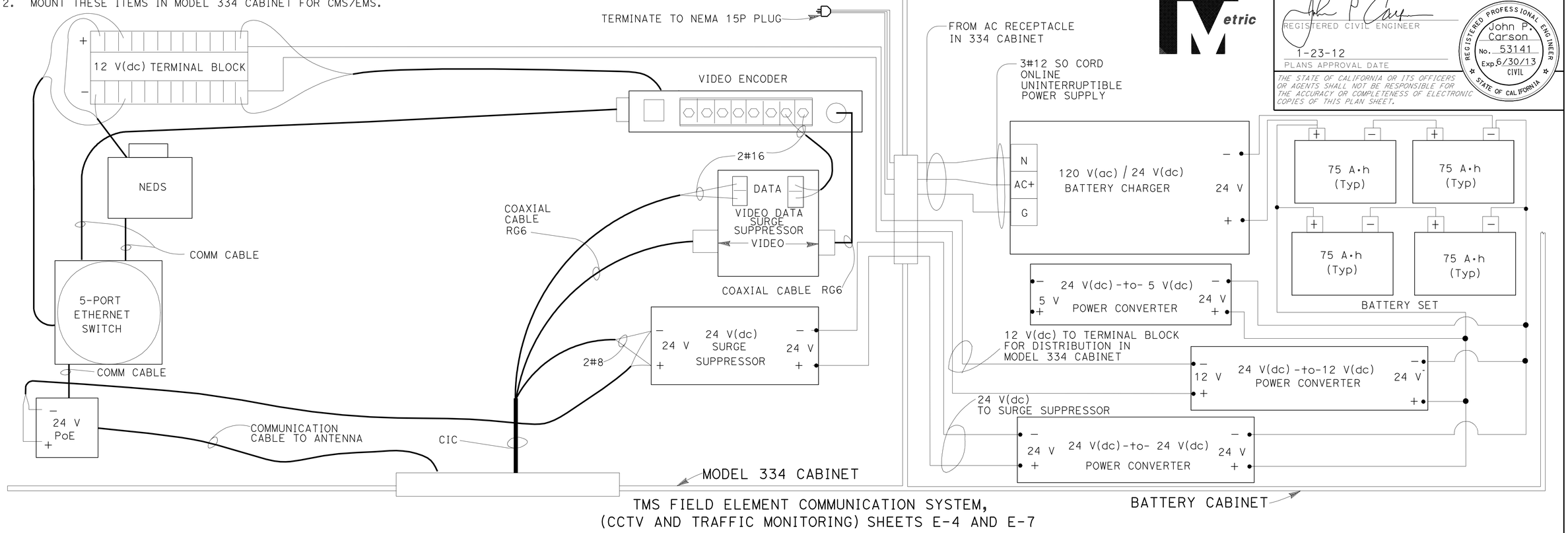

TMS FIELD ELEMENT COMMUNICATION SYSTEM,
(CCTV AND TRAFFIC MONITORING) SHEETS E-4 AND E-7

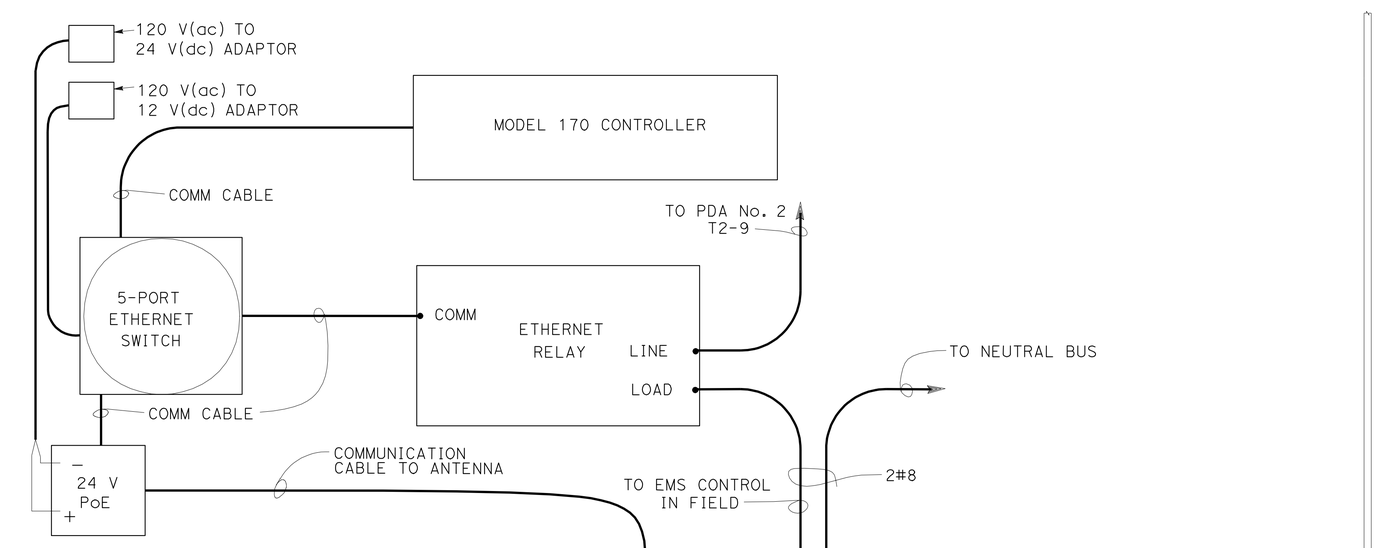

TMS FIELD ELEMENT COMMUNICATION SYSTEM,
(CMS AND EMS) SEE SHEET E-1

APPROVED FOR ELECTRICAL WORK ONLY

LEGEND (E-14 AND E-15):

NEDS = Network Ethernet Device Server
AC + = Ungrounded Conductor
AC - = Grounded Conductor
Gnd = Ground

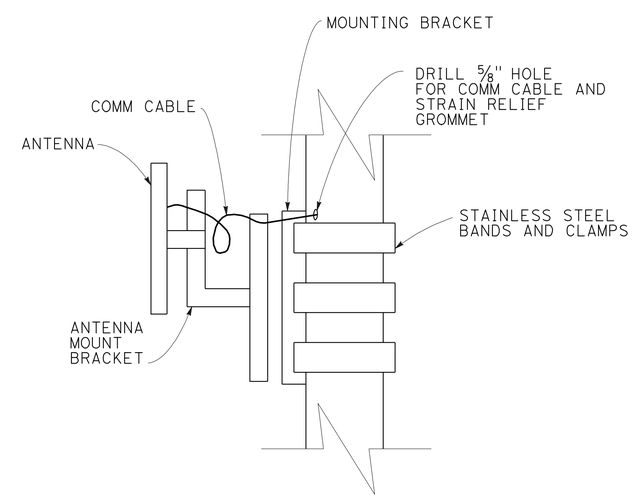

ANTENNA MOUNT DETAIL

ELECTRICAL DETAILS
(TMS FIELD ELEMENT COMMUNICATION SYSTEM)

NO SCALE

E-14

REVISED BY | DATE REVISED
CALCULATED-DESIGNED BY | CHECKED BY
FUNCTIONAL SUPERVISOR: JOHN CARSON

STATE OF CALIFORNIA - DEPARTMENT OF TRANSPORTATION
Caltrans
TRAFFIC MANAGEMENT CENTER
DISTRICT 1

LAST REVISION 01-24-12 | DATE PLOTTED => 30-JAN-2012 | TIME PLOTTED => 11:36

Dist	COUNTY	ROUTE	KILOMETER POST TOTAL PROJECT	SHEET No.	TOTAL SHEETS
01	Men	101	R69.4/R78.9	543	939

REGISTERED CIVIL ENGINEER

1-23-12

PLANS APPROVAL DATE

REGISTERED PROFESSIONAL ENGINEER John P. Carson No. 53141 Exp. 6/30/13 CIVIL STATE OF CALIFORNIA

THE STATE OF CALIFORNIA OR ITS OFFICERS OR AGENTS SHALL NOT BE RESPONSIBLE FOR THE ACCURACY OR COMPLETENESS OF ELECTRONIC COPIES OF THIS PLAN SHEET.

Caltrans Metric

NOTES:
1. ALL 5 V(dc) and 12 V(dc) CONDUCTORS ARE SIZE 12 AWG.
   ALL 24 V(dc) CONDUCTORS ARE SIZE 8 AWG, EXCEPT WHERE NOTED.
2. MOUNT THESE ITEMS IN MODEL 334 CABINET FOR CMS/EMS.

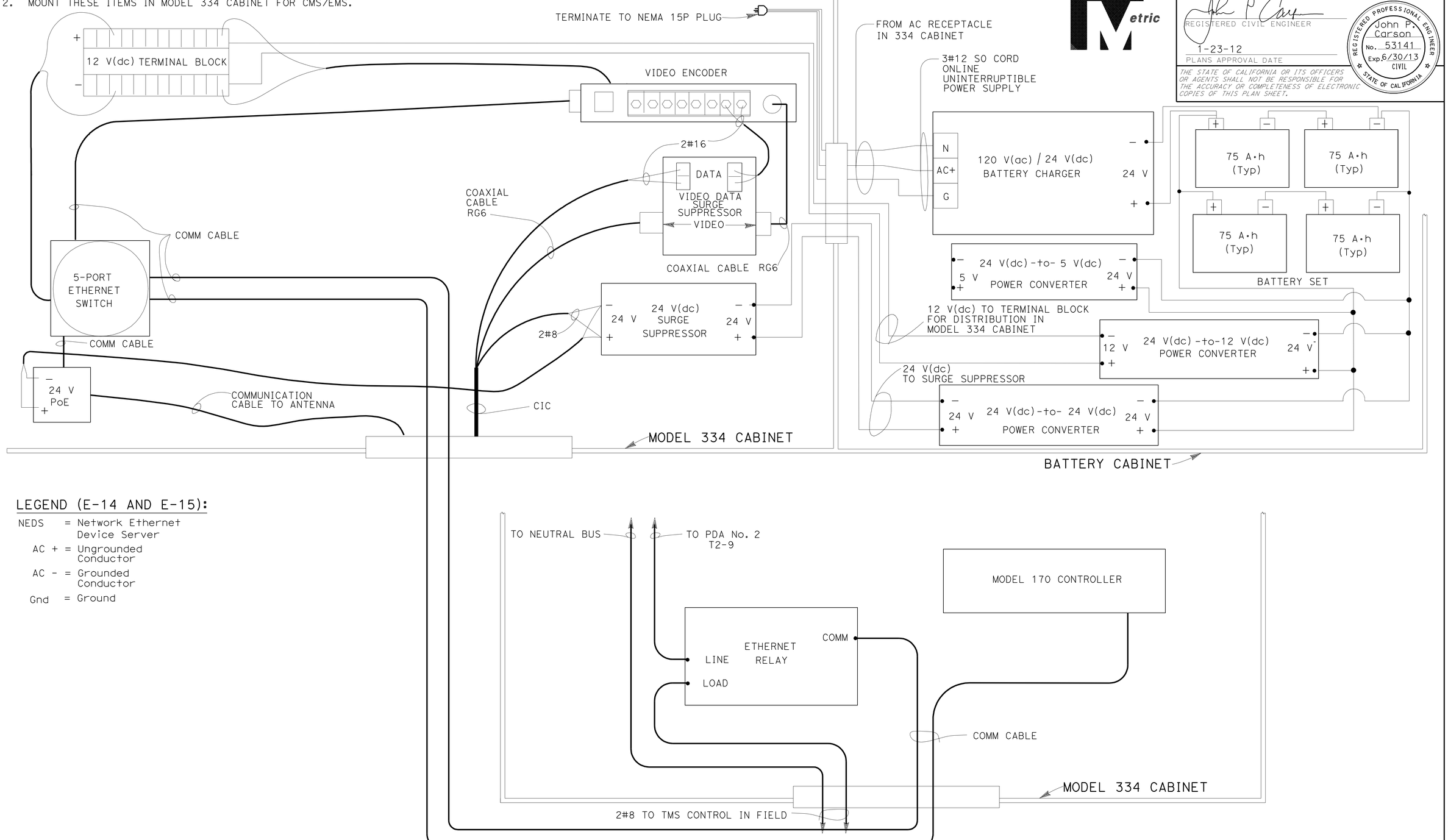

LEGEND (E-14 AND E-15):

NEDS = Network Ethernet Device Server
AC + = Ungrounded Conductor
AC – = Grounded Conductor
Gnd = Ground

TMS FIELD ELEMENT COMMUNICATION SYSTEM, (CCTV, CMS AND EMS) SHEET E-10

APPROVED FOR ELECTRICAL WORK ONLY

ELECTRICAL DETAILS
(TMS FIELD ELEMENT COMMUNICATION SYSTEM)

NO SCALE

E-15

REVISED BY | DATE REVISED

CALCULATED-DESIGNED BY | CHECKED BY

FUNCTIONAL SUPERVISOR: JOHN CARSON

STATE OF CALIFORNIA - DEPARTMENT OF TRANSPORTATION
Caltrans
TRAFFIC MANAGEMENT CENTER DISTRICT 1

LAST REVISION 01-24-12 | DATE PLOTTED => 27-JAN-2012 | TIME PLOTTED => 13:30

DIST	COUNTY	ROUTE	KILOMETER POST TOTAL PROJECT	SHEET NO.	TOTAL SHEETS
01	Men	101	R69.4/R78.9	544	939

Caltrans Metric

Donald E Howe
REGISTERED CIVIL ENGINEER

June 6, 2008
PLANS APPROVAL DATE

REGISTERED PROFESSIONAL ENGINEER Donald E. Howe No. C46402 Exp. 3-31-09 CIVIL STATE OF CALIFORNIA

The State of California or its officers or agents shall not be responsible for the accuracy or completeness of electronic copies of this plan sheet.

To get to the Caltrans web site, go to: http://www.dot.ca.gov

To accompany plans dated 1-23-12

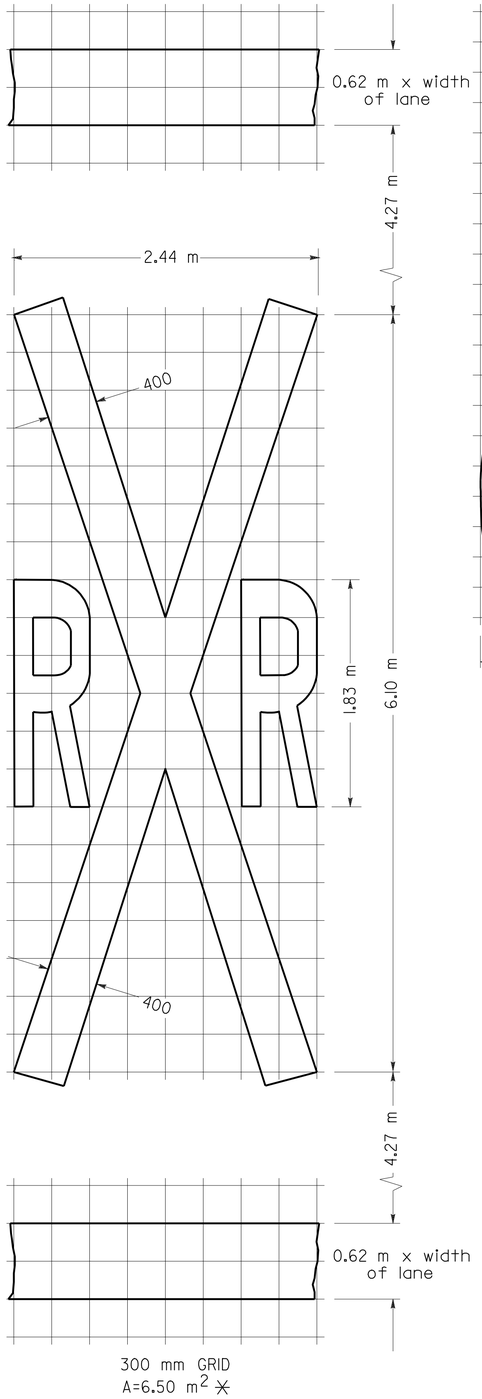

RAILROAD CROSSING SYMBOL

✳6.5 m^2 DOES NOT INCLUDE THE 0.6 m x VARIABLE WIDTH TRANSVERSE LINES.

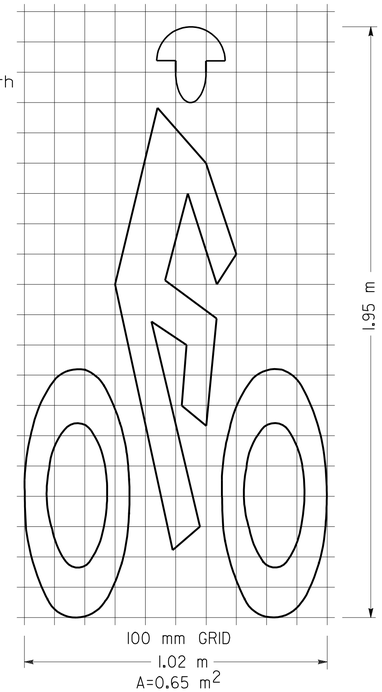

BIKE LANE SYMBOL

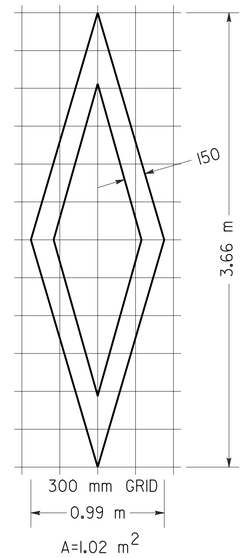

DIAMOND SYMBOL

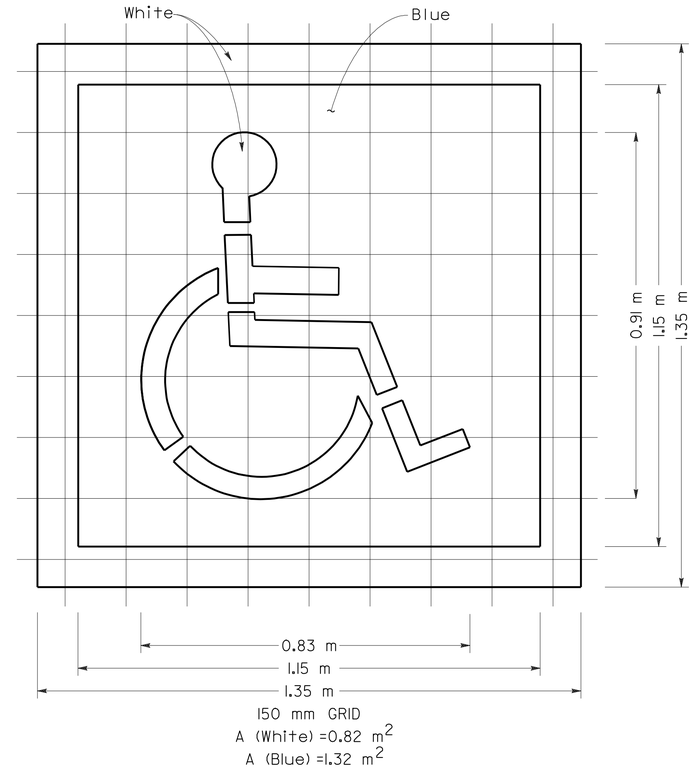

INTERNATIONAL SYMBOL OF ACCESSIBILITY MARKING

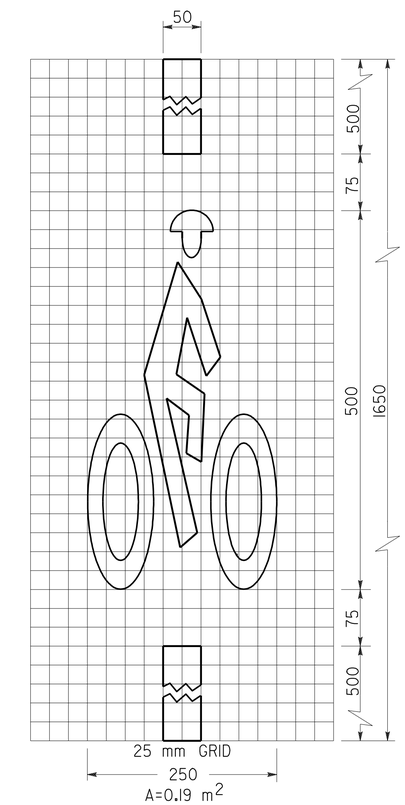

BICYCLE LOOP DETECTOR SYMBOL

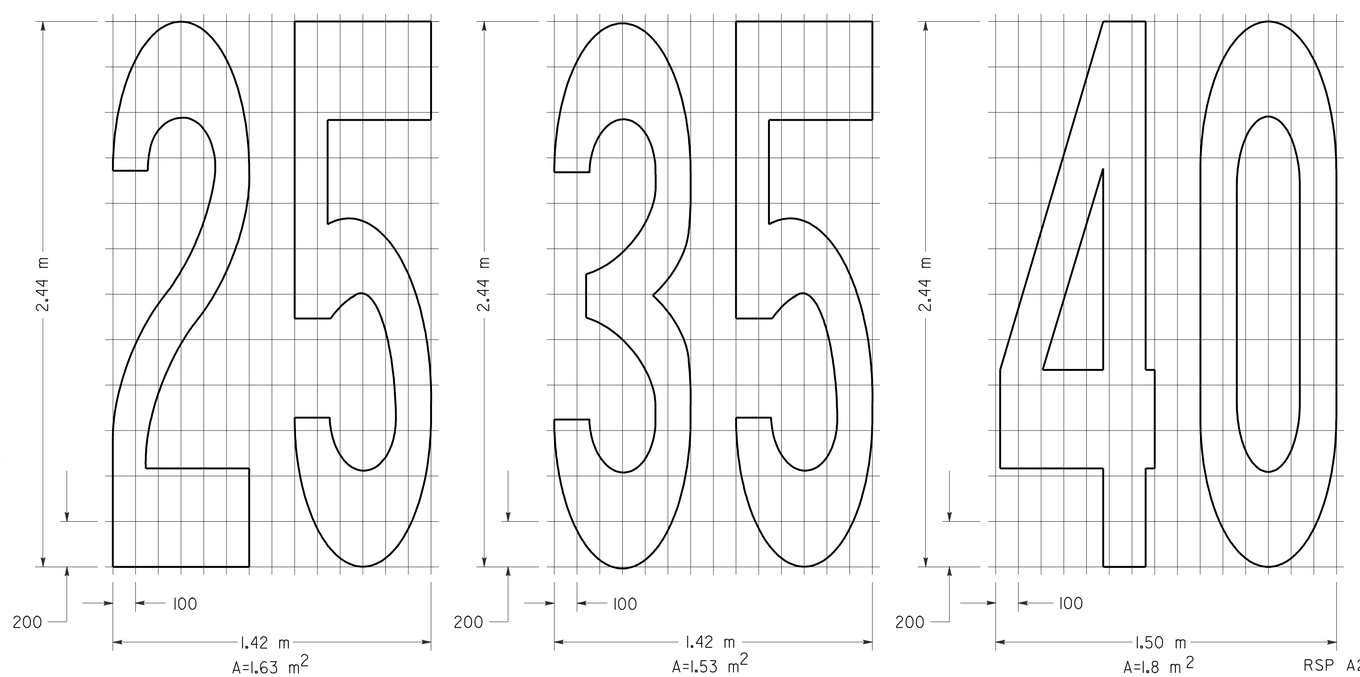

NUMERALS

NOTE:

1. Minor variations in dimensions may be accepted by the Engineer.

STATE OF CALIFORNIA
DEPARTMENT OF TRANSPORTATION

PAVEMENT MARKINGS SYMBOLS AND NUMERALS

NO SCALE

ALL DIMENSIONS ARE IN MILLIMETERS UNLESS OTHERWISE SHOWN

RSP A24C DATED JUNE 6, 2008 SUPERSEDES STANDARD PLAN A24C DATED July 1, 2004 - PAGE 11 OF THE STANDARD PLANS BOOK DATED July 2004.

REVISED STANDARD PLAN RSP A24C

2004 REVISED Std PLAN RSP A24C

5-27-08

DIST	COUNTY	ROUTE	KILOMETER POST TOTAL PROJECT	SHEET NO.	TOTAL SHEETS
01	Men	101	R69.4/R78.9	545	939

Caltrans Metric

Mark S. Turner
LICENSED LAND SURVEYOR

June 30, 2006
PLANS APPROVAL DATE

LICENSED LAND SURVEYOR — Mark S. Turner — No. 6228 — Exp. 3-31-08 — STATE OF CALIFORNIA

The State of California or its officers or agents shall not be responsible for the accuracy or completeness of electronic copies of this plan sheet.

To get to the Caltrans web site, go to: http://www.dot.ca.gov

To accompany plans dated 1-23-12

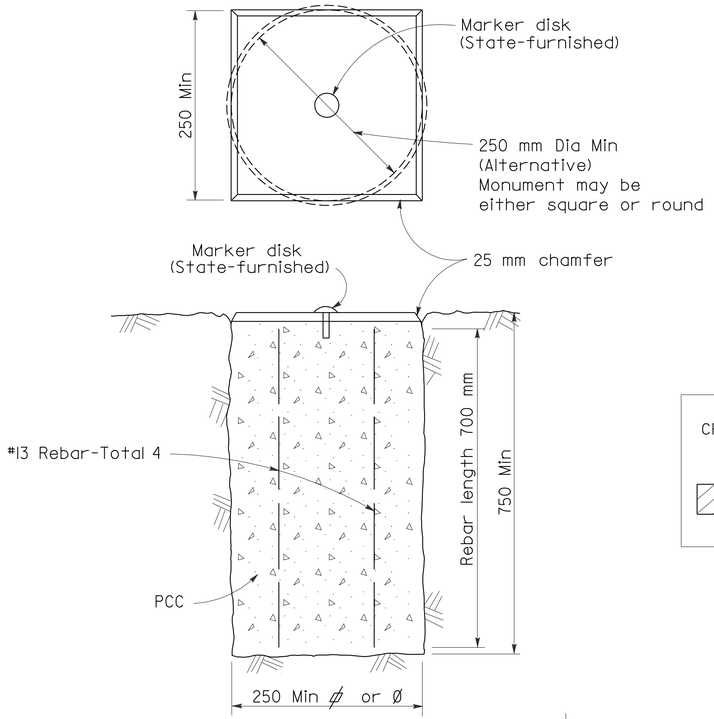

TYPE A

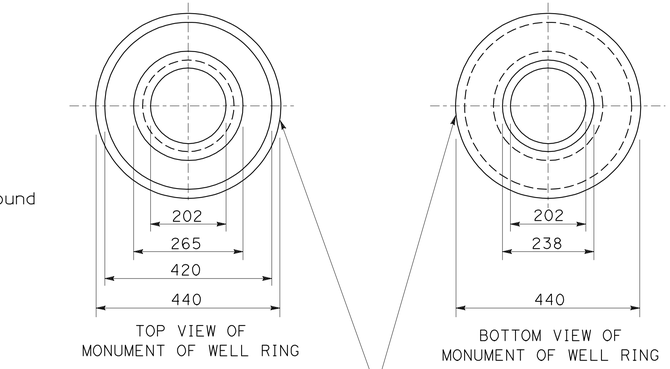

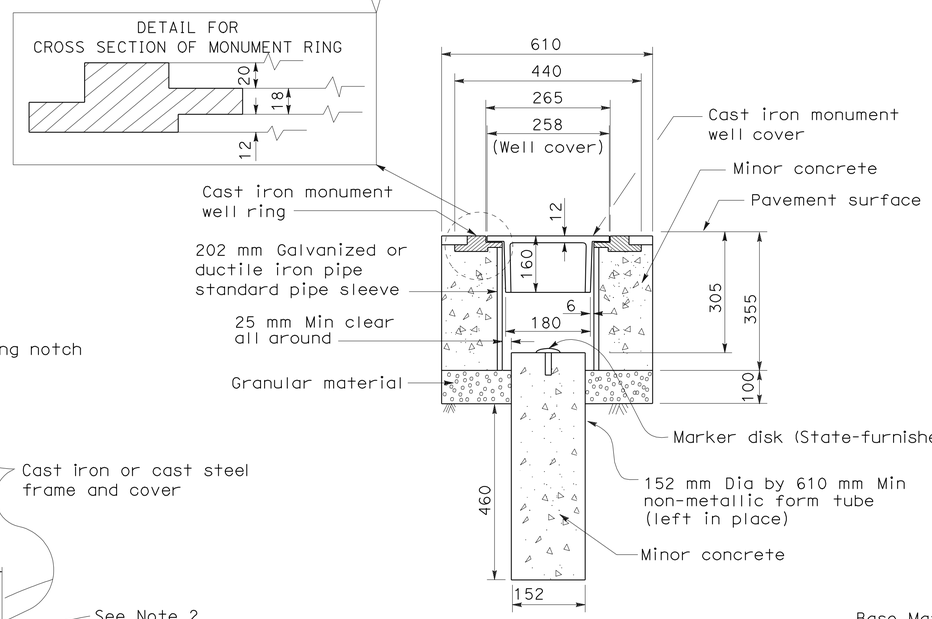

TYPE B

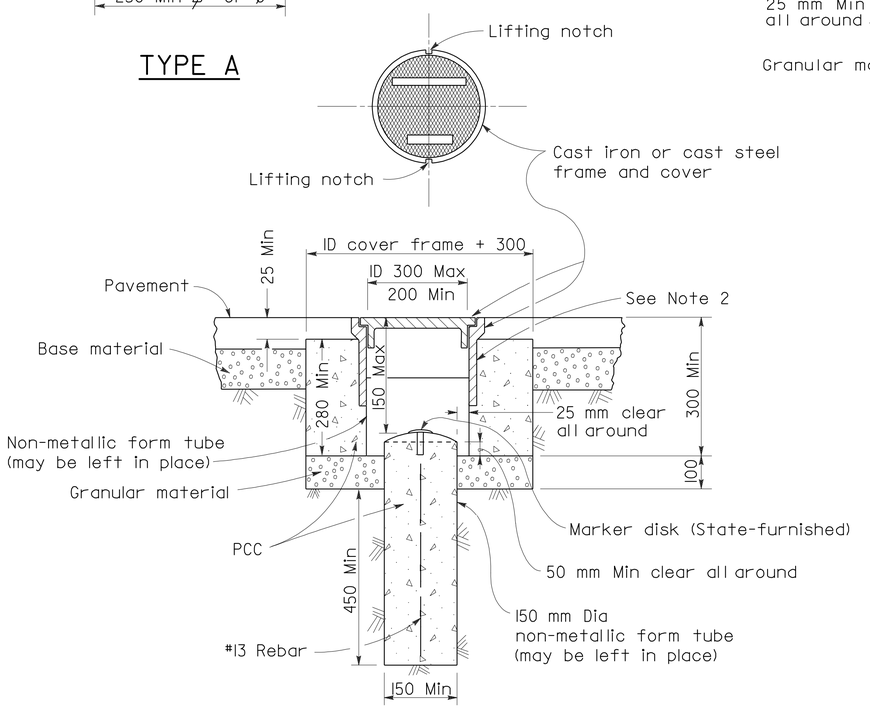

TYPE D

Alternative No. 1

NOTES

1. The configuration of the cast iron or cast steel frame and cover may vary from that shown.
2. Frame shall be embedded in the concrete a minimum of 75 mm.
3. Type D monument shall be either Alternative No. 1 or Alternative No. 2 at the contractor's option.
4. All portland cement concrete shall be Class 2 or minor concrete with 25 mm maximum aggregate.

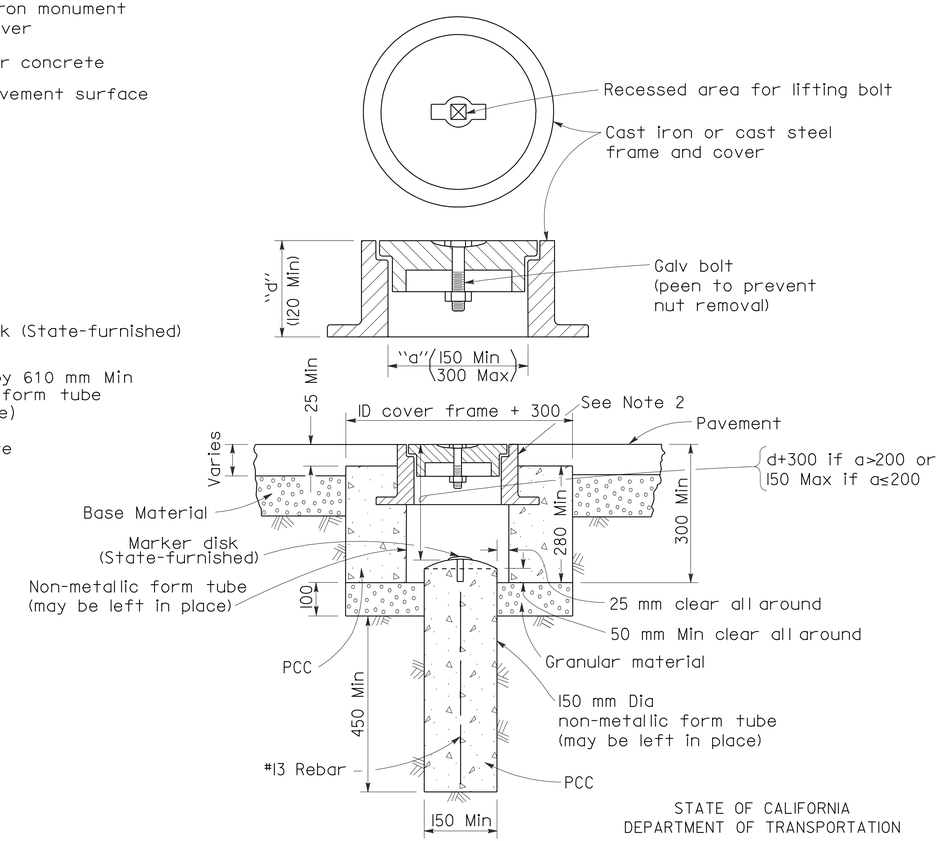

TYPE D

Alternative No. 2

STATE OF CALIFORNIA
DEPARTMENT OF TRANSPORTATION

SURVEY MONUMENTS

NO SCALE

ALL DIMENSIONS ARE IN
MILLIMETERS UNLESS OTHERWISE SHOWN

RSP A74 DATED JUNE 30, 2006 SUPERSEDES STANDARD PLAN A74
DATED JULY 1, 2004-PAGE 28 OF THE STANDARD PLANS BOOK DATED JULY 2004.

REVISED STANDARD PLAN RSP A74

2004 REVISED Std PLAN RSP A74

5-24-06

DIST	COUNTY	ROUTE	KILOMETER POST TOTAL PROJECT	SHEET NO.	TOTAL SHEETS
01	Men	101	R69.4/R78.9	546	939

Caltrans Metric

Randell D. Hiatt
REGISTERED CIVIL ENGINEER

June 6, 2008
PLANS APPROVAL DATE

REGISTERED PROFESSIONAL ENGINEER Randell D. Hiatt No. C50200 Exp. 6-30-09 CIVIL STATE OF CALIFORNIA

The State of California or its officers or agents shall not be responsible for the accuracy or completeness of electronic copies of this plan sheet.

To get to the Caltrans web site, go to: http://www.dot.ca.gov

To accompany plans dated 1-23-12

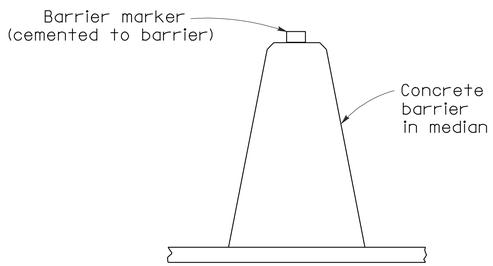

CONCRETE BARRIER TYPE 60 DELINEATION

See Notes 7 and 8

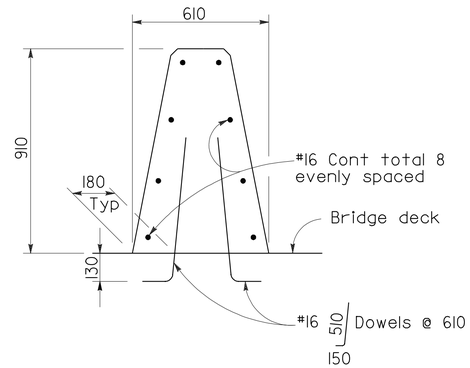

CONCRETE BARRIER TYPE 60A

Details similar to Type 60 except as noted.

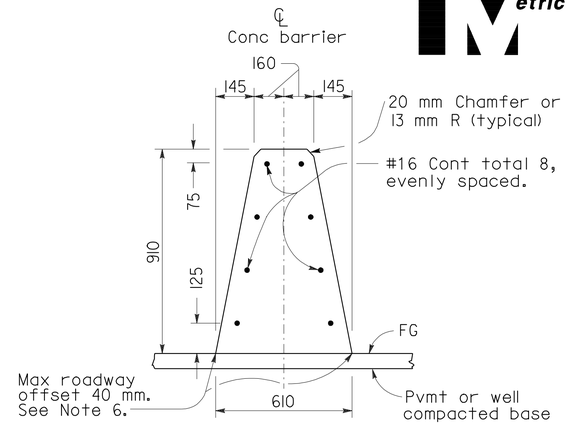

CONCRETE BARRIER TYPE 60

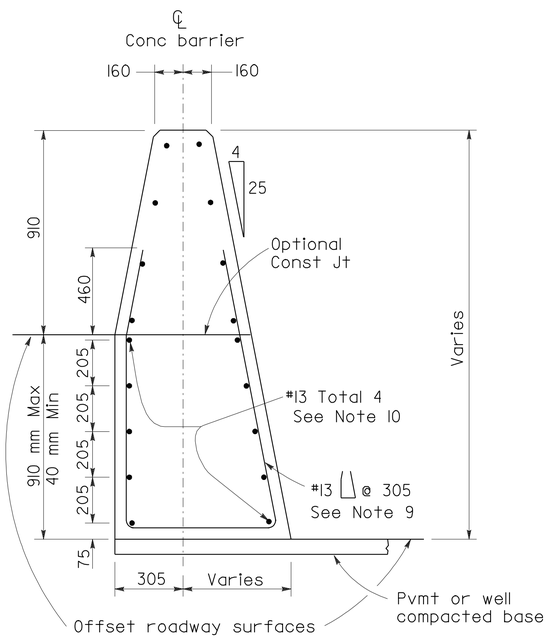

CONCRETE BARRIER TYPE 60C

Details similar to Type 60 except as noted.
Concrete barrier end anchor when necessary.
910 mm roadway surfaces offset shown.

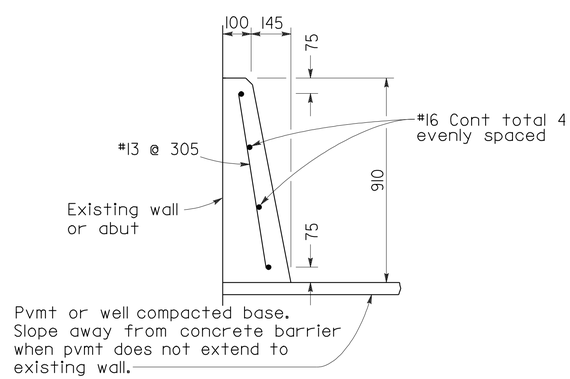

CONCRETE BARRIER TYPE 60D

NOTES

1. See Standard Plan A76B for details of Concrete Barrier Type 60 end anchors, connection to structures and transitions to Concrete Barrier Type 50 and Concrete Barrier Type 60S.
2. See Standard Plan A76C for Concrete Barrier Type 60 transitions at bridge column and sign pedestals.
3. Where glare screen is required on Concrete Barrier Type 60, use Concrete Barrier Type 60G.
4. Where the concrete barrier is added to the face of existing concrete structure, match existing weep holes.
5. Expansion joints in concrete barrier shall be located at all deck, pavement and principal wall joints. Expansion joint filler material shall be the same size as joint or 13 mm minimum.
6. Where roadway offset is greater than 40 mm, see Concrete Barrier Type 60C.
7. Barrier delineation to be used when required by the Special Provisions.
8. Spacing of barrier markers to match spacing of raised pavement markers on the adjacent median edgeline pavement delineation.
9. Reinforcing stirrup not required for roadway offsets less than 305 mm.
10. For roadway surfaces offset greater than 40 mm to 75 mm, no rebars required. For roadway surfaces offset greater than 75 mm to 205 mm, use two #13 rebars at 75 mm above the lower roadway surface. For roadway surfaces offset greater than 205 mm to 305 mm, use two #13 rebars at 75 mm above the lower roadway surface and two #13 rebars at 205 mm above the lower roadway surface. For roadway surfaces offset greater than 305 mm to 910 mm, use two #13 rebars at 75 mm above the lower roadway surface and two #13 rebars at every 205 mm increment vertical spacing above the first two #13 rebars.

STATE OF CALIFORNIA
DEPARTMENT OF TRANSPORTATION

CONCRETE BARRIER TYPE 60

NO SCALE
ALL DIMENSIONS ARE IN
MILLIMETERS UNLESS OTHERWISE SHOWN
RSP A76A DATED JUNE 6, 2008 SUPERSEDES STANDARD PLAN A76A
DATED July 1, 2004 - PAGE 29 OF THE STANDARD PLANS BOOK DATED July 2004.

REVISED STANDARD PLAN RSP A76A

2004 REVISED Std PLAN RSP A76A

5-21-08

DIST	COUNTY	ROUTE	POST MILES TOTAL PROJECT	SHEET NO.	TOTAL SHEETS
01	Men	101	R69.4/R78.9	547	939

Caltrans Metric

Randell D. Hiatt
REGISTERED CIVIL ENGINEER

October 20, 2006
PLANS APPROVAL DATE

REGISTERED PROFESSIONAL ENGINEER
Randell D. Hiatt
No. C50200
Exp. 6-30-07
CIVIL
STATE OF CALIFORNIA

The State of California or its officers or agents shall not be responsible for the accuracy or completeness of electronic copies of this plan sheet.

To get to the Caltrans web site, go to: http://www.dot.ca.gov

To accompany plans dated 1-23-12

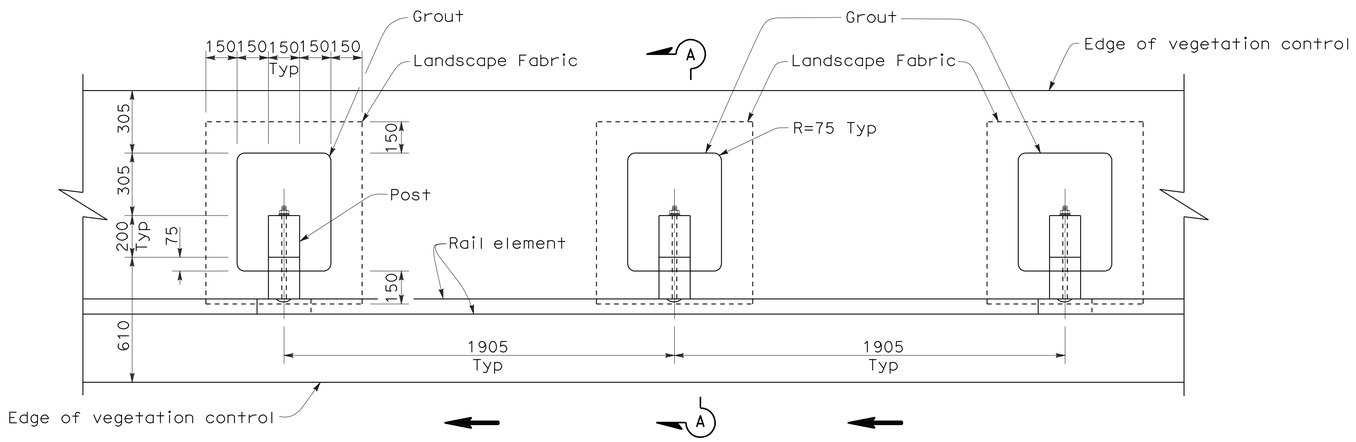

PLAN

NOTES:

1. Where the distance between back of post and hinge point is less than 610 mm, vegetation control to be constructed flush with the back edge of the post.
2. Where dike is constructed under railing, construct vegetation control to back edge of dike. Where paved shoulder is constructed within 610 mm in front of the post, construct vegetation control to the edge of paved shoulder.
3. Direction of adjacent traffic indicated by ← .

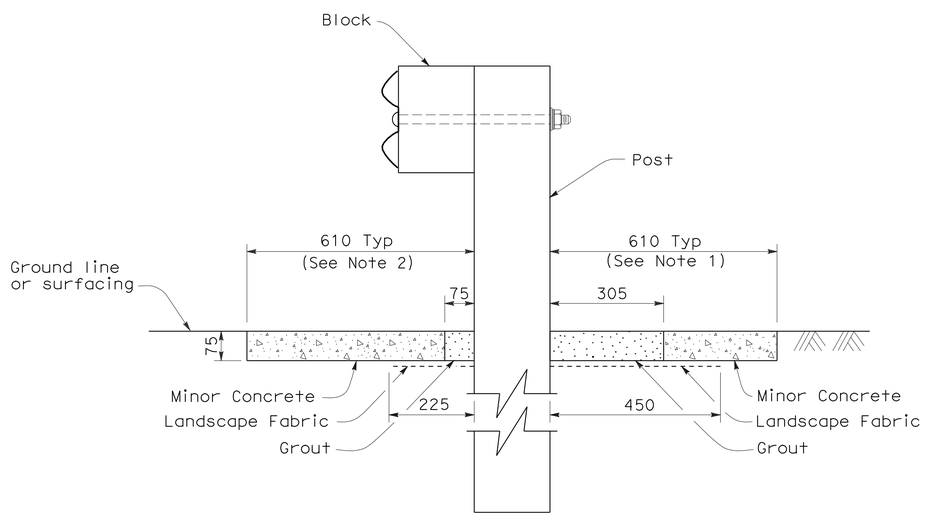

SECTION A-A

STATE OF CALIFORNIA
DEPARTMENT OF TRANSPORTATION

METAL BEAM GUARD RAILING TYPICAL VEGETATION CONTROL STANDARD RAILING SECTION

NO SCALE

ALL DIMENSIONS ARE IN MILLIMETERS UNLESS OTHERWISE SHOWN

NSP A77C5 DATED OCTOBER 20, 2006 SUPPLEMENTS THE STANDARD PLANS BOOK DATED JULY 2004.

NEW STANDARD PLAN NSP A77C5

2004 NEW STANDARD PLAN NSP A77C5

7-24-06

DIST	COUNTY	ROUTE	KILOMETER POST TOTAL PROJECT	SHEET NO.	TOTAL SHEETS
01	Men	101	R69.4/R78.9	548	939

Caltrans Metric

Randell D. Hiatt
REGISTERED CIVIL ENGINEER

June 6, 2008
PLANS APPROVAL DATE

REGISTERED PROFESSIONAL ENGINEER Randell D. Hiatt No. C50200 Exp. 6-30-09 CIVIL STATE OF CALIFORNIA

The State of California or its officers or agents shall not be responsible for the accuracy or completeness of electronic copies of this plan sheet.

To get to the Caltrans web site, go to: http://www.dot.ca.gov

To accompany plans dated 1-23-12

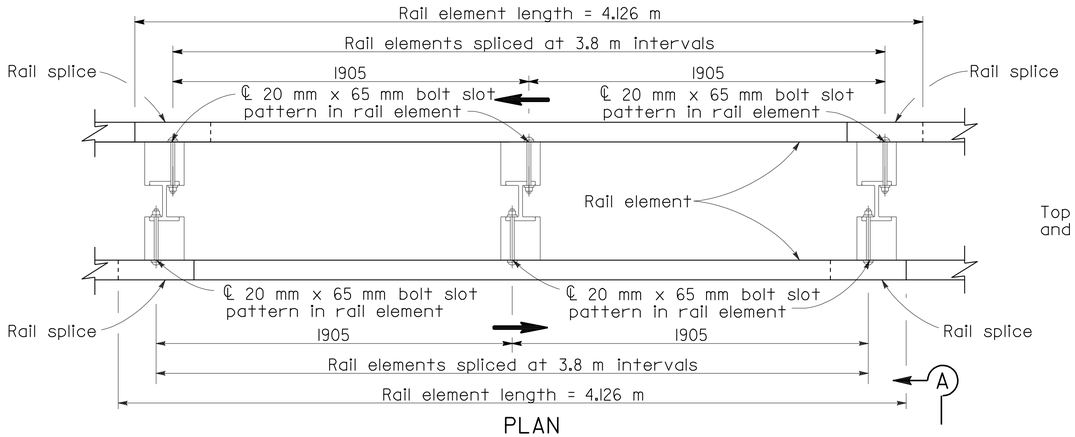

PLAN

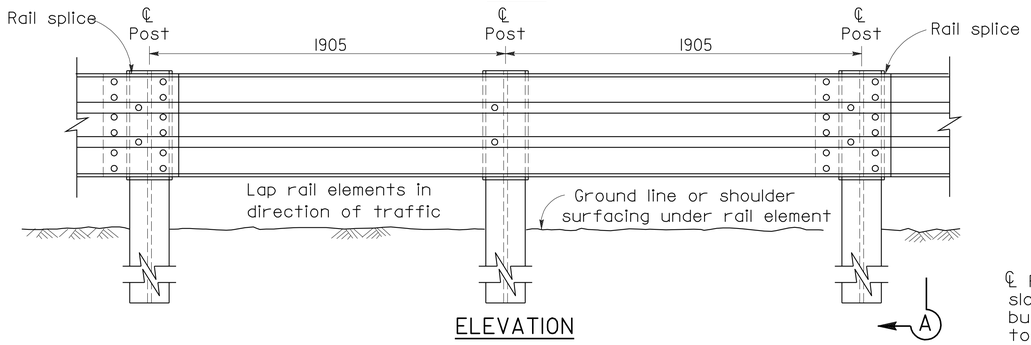

ELEVATION

DOUBLE THRIE BEAM BARRIER

(Steel post with notched wood or notched plastic blocks)
See Note 1

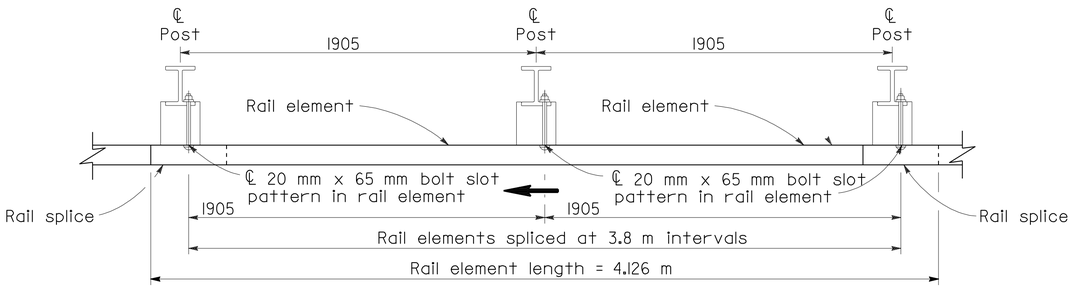

PLAN

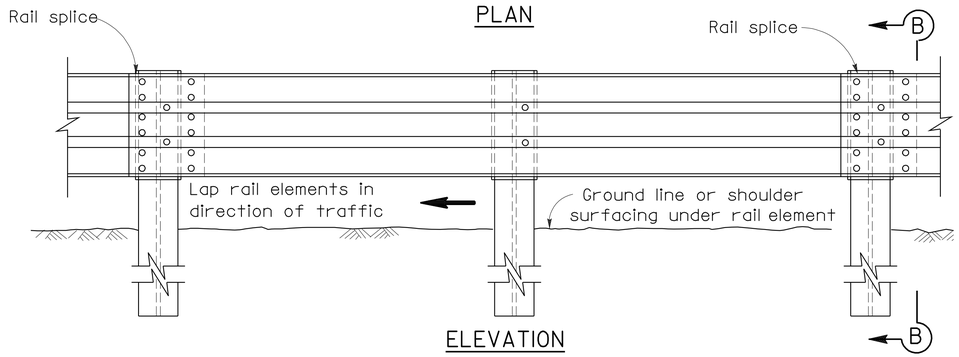

ELEVATION

SINGLE THRIE BEAM BARRIER

(Steel post with notched wood or notched plastic blocks)
See Note 1

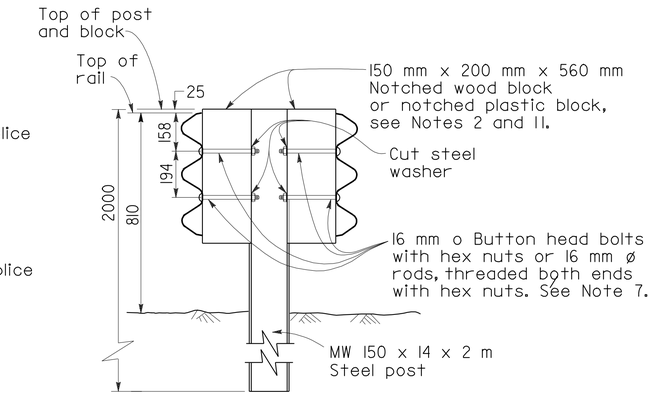

SECTION A-A

TYPICAL STEEL LINE POST INSTALLATION

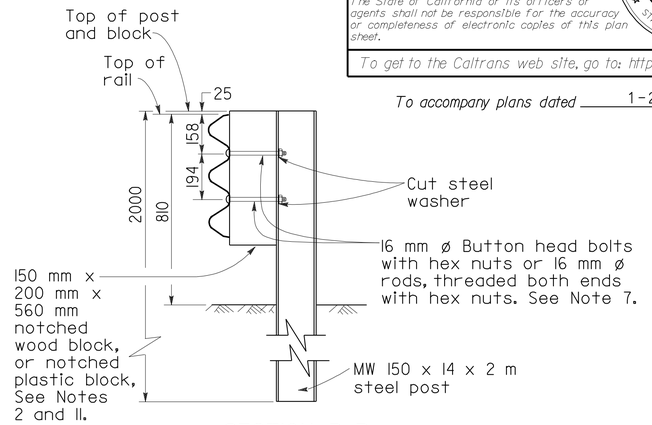

SECTION B-B

TYPICAL STEEL LINE POST INSTALLATION

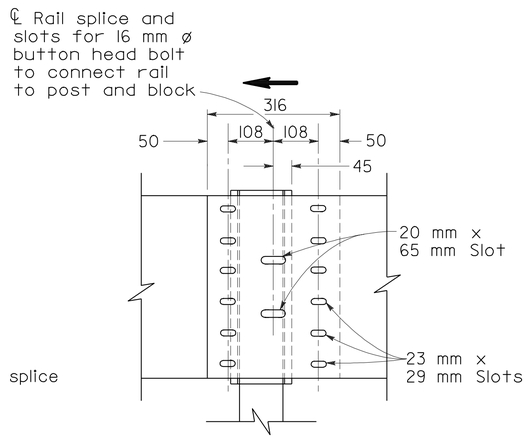

ELEVATION

RAIL ELEMENT SPLICE DETAIL

a) Connect the overlapped ends of the thrie beam rail elements with 16 mm ø x 35 mm button head oval shoulder bolts inserted into the 23 mm x 29 mm slots and bolted together with 16 mm ø x 35 mm recessed hex nuts. Recess of hex nut points toward rail element. A total of 12 bolts and nuts are to be used at each rail splice connection.

b) The ends of the rail elements are to be overlapped in the direction of traffic (see details).

c) Where end cap is to be attached to the end of a rail element, a total of 4 of the above described splice bolts and nuts are to be used. Where a return cap is to be attached to the ends of rail elements, a total of 8 of the above described splice bolts and nuts are to be used.

NOTES

1. For details of the cross section of the thrie beam rail element and details for wood post with wood block installations, see Standard Plan A78A.
2. For details of standard hardware, posts and blocks used to construct thrie beam barrier, see Standard Plan A78C1 and A78C2.
3. Thrie beam barrier post spacing to be 1905 mm center to center, except as otherwise noted.
4. Top of barrier rail to be 810 mm above ground line or shoulder surfacing under the rail element.
5. For barrier end treatments and barrier connections, see Standard Plans A78E1, A78E2, A78E3, A78F1, A78F2, A78G and A78H.
6. For connection to Concrete Barrier, see Revised Standard Plans RSP A78I.
7. Attach rail element to block and steel post with 2 bolts or rods on approaching traffic side of block and post web. No washer on rail face for rod or bolted connections to line post.
8. For details of thrie beam barrier on bridges, see Standard Plan A78D2. For details of thrie beam barrier at fixed objects, see Standard Plan A78D1.
9. Direction of traffic indicated by ⟶.
10. Notched face of block faces steel post.

STATE OF CALIFORNIA
DEPARTMENT OF TRANSPORTATION

THRIE BEAM BARRIER STANDARD BARRIER RAILING SECTION (STEEL POST WITH NOTCHED WOOD BLOCK OR NOTCHED PLASTIC BLOCK)

NO SCALE

ALL DIMENSIONS ARE IN MILLIMETERS UNLESS OTHERWISE SHOWN

RSP A78B DATED JUNE 6, 2008 SUPERSEDES STANDARD PLAN A78B
DATED July 1, 2004 - PAGE 86 OF THE STANDARD PLANS BOOK DATED July 2004.

REVISED STANDARD PLAN RSP A78B

2004 REVISED Std PLAN RSP A78B

5-19-08

DIST	COUNTY	ROUTE	POST MILES TOTAL PROJECT	SHEET NO.	TOTAL SHEETS
01	Men	101	R69.4/R78.9	549	939

Caltrans Metric

Randell D. Hiatt
REGISTERED CIVIL ENGINEER

October 20, 2006
PLANS APPROVAL DATE

REGISTERED PROFESSIONAL ENGINEER
Randell D. Hiatt
No. C50200
Exp. 6-30-07
CIVIL
STATE OF CALIFORNIA

The State of California or its officers or agents shall not be responsible for the accuracy or completeness of electronic copies of this plan sheet.

To get to the Caltrans web site, go to: http://www.dot.ca.gov

To accompany plans dated 1-23-12

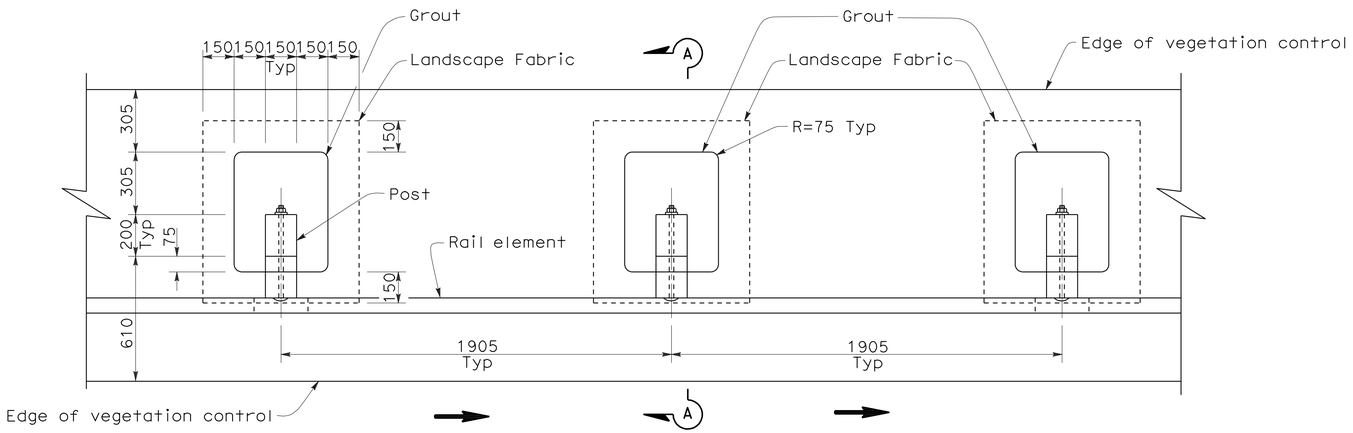

PLAN

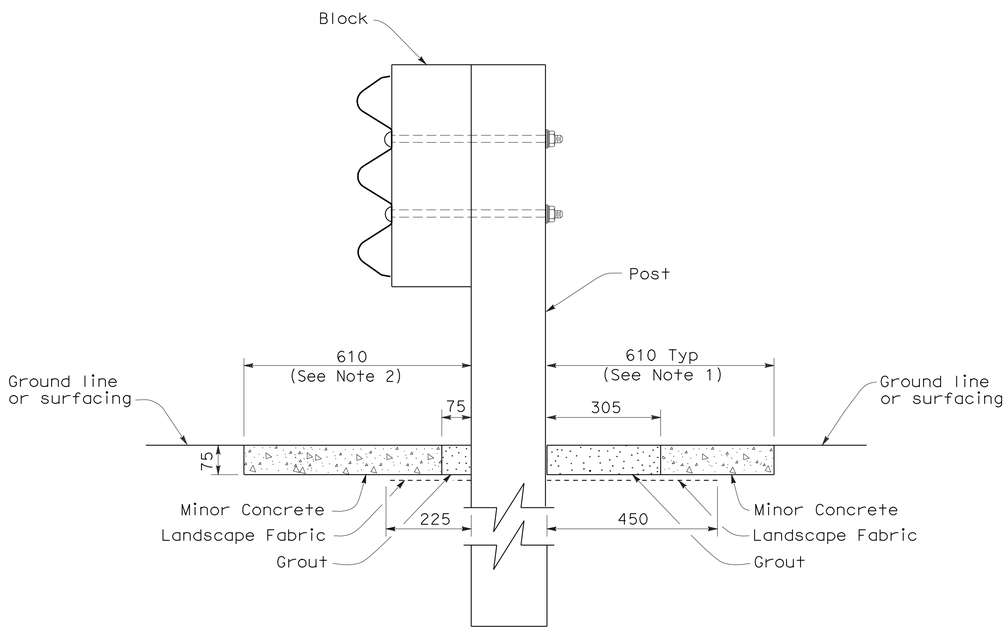

SECTION A-A

NOTES:

1. Where the distance between back of post and hinge point is less than 610 mm, vegetation control to be constructed flush with the back edge of the post.
2. Where dike is constructed under barrier, construct vegetation control to back edge of dike. Where paved shoulder is constructed within 610 mm in front of the post, construct vegetation control to the edge of paved shoulder.
3. Direction of adjacent traffic indicated by ➡.

STATE OF CALIFORNIA
DEPARTMENT OF TRANSPORTATION

SINGLE THRIE BEAM BARRIER TYPICAL VEGETATION CONTROL STANDARD BARRIER RAILING SECTION

NO SCALE

ALL DIMENSIONS ARE IN MILLIMETERS UNLESS OTHERWISE SHOWN

NSP A78C3 DATED OCTOBER 20, 2006 SUPPLEMENTS THE STANDARD PLANS BOOK DATED JULY 2004.

NEW STANDARD PLAN NSP A78C3

2004 NEW STANDARD PLAN NSP A78C3

7-24-06

DIST	COUNTY	ROUTE	POST MILES TOTAL PROJECT	SHEET NO.	TOTAL SHEETS
01	Men	101	R69.4/R78.9	550	939

Caltrans Metric

Randell D. Hiatt
REGISTERED CIVIL ENGINEER

October 20, 2006
PLANS APPROVAL DATE

REGISTERED PROFESSIONAL ENGINEER
Randell D. Hiatt
No. C50200
Exp. 6-30-07
CIVIL
STATE OF CALIFORNIA

The State of California or its officers or agents shall not be responsible for the accuracy or completeness of electronic copies of this plan sheet.

To get to the Caltrans web site, go to: http://www.dot.ca.gov

To accompany plans dated 1-23-12

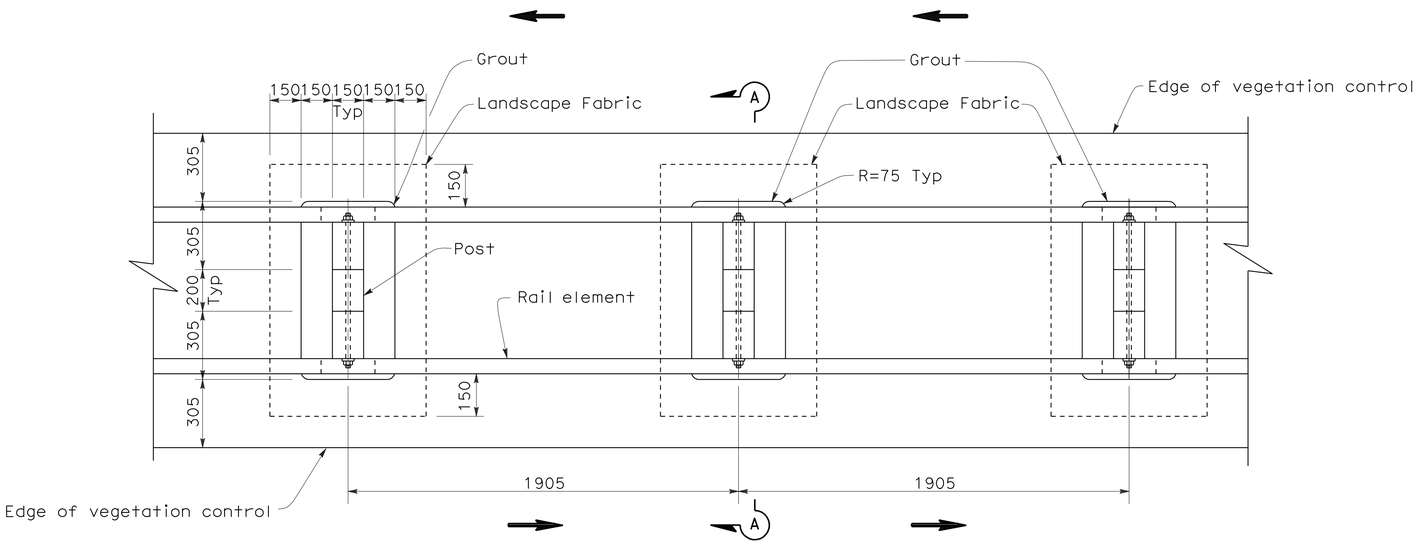

PLAN

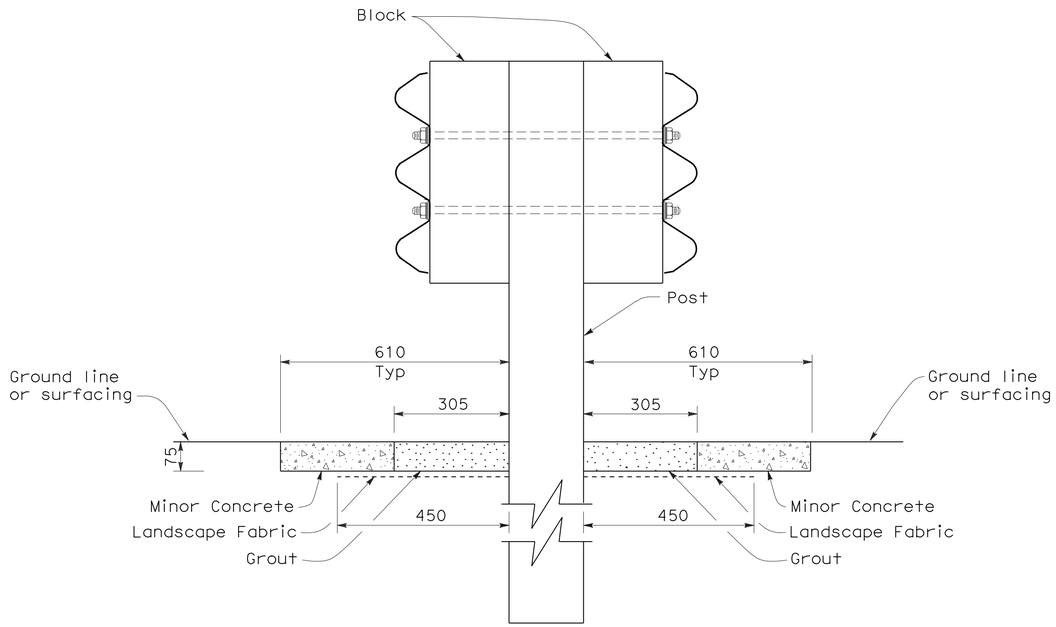

SECTION A-A

NOTE:

1. Direction of adjacent traffic indicated by ⟶.

STATE OF CALIFORNIA
DEPARTMENT OF TRANSPORTATION

DOUBLE THRIE BEAM BARRIER TYPICAL VEGETATION CONTROL STANDARD BARRIER RAILING SECTION

NO SCALE

ALL DIMENSIONS ARE IN
MILLIMETERS UNLESS OTHERWISE SHOWN

NSP A78C4 DATED OCTOBER 20, 2006 SUPPLEMENTS THE STANDARD PLANS BOOK DATED JULY 2004.

NEW STANDARD PLAN NSP A78C4

2004 NEW STANDARD PLAN NSP A78C4

7-24-06

DIST	COUNTY	ROUTE	POST MILES TOTAL PROJECT	SHEET NO.	TOTAL SHEETS
01	Men	101	R69.4/R78.9	551	939

Caltrans Metric

Randell D. Hiatt
REGISTERED CIVIL ENGINEER

October 20, 2006
PLANS APPROVAL DATE

REGISTERED PROFESSIONAL ENGINEER
Randell D. Hiatt
No. C50200
Exp. 6-30-07
STATE OF CALIFORNIA

The State of California or its officers or agents shall not be responsible for the accuracy or completeness of electronic copies of this plan sheet.

To get to the Caltrans web site, go to: http://www.dot.ca.gov

To accompany plans dated 1-23-12

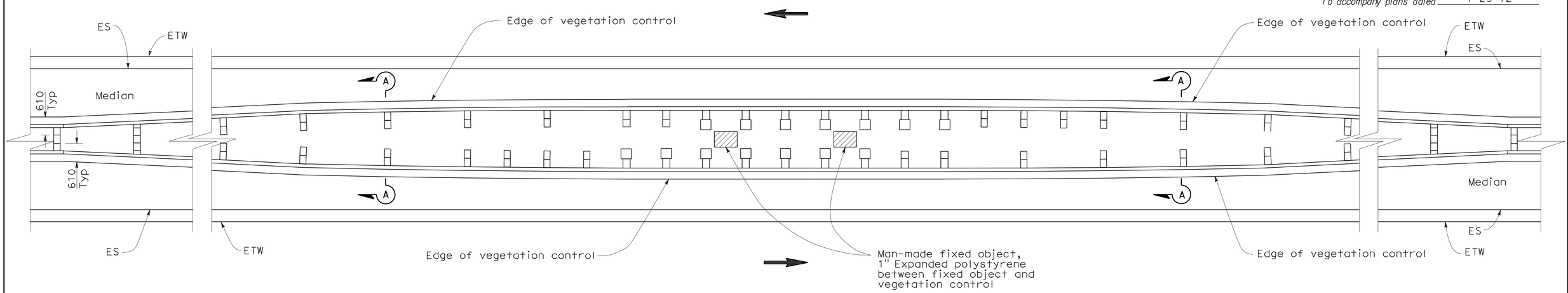

PLAN

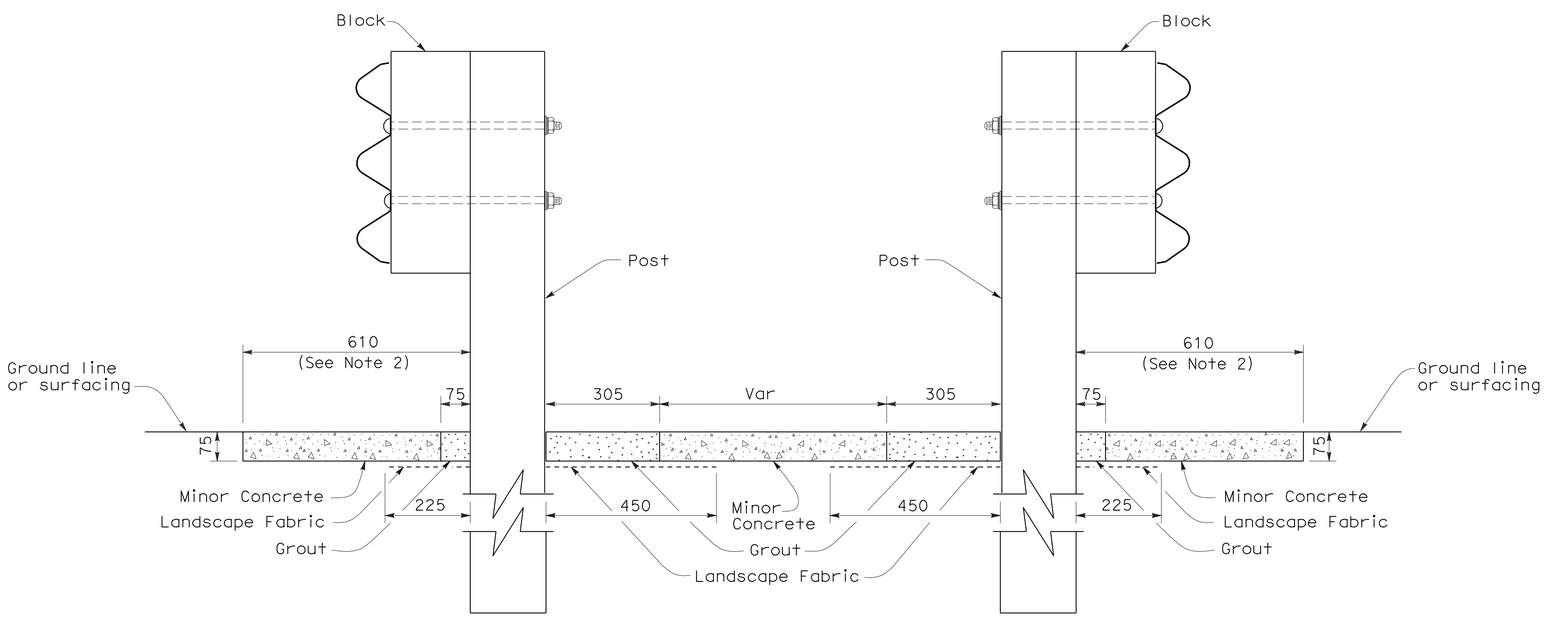

SECTION A-A

NOTES:

1. See New Standard Plan NSP A78C3 for additional vegetation control.
2. Where dike is constructed under barrier, construct vegetation control to back edge of dike. Where paved shoulder is constructed within 610 mm in front of the post, construct vegetation control to the edge of paved shoulder.
3. Direction of adjacent traffic indicated by ←.

STATE OF CALIFORNIA
DEPARTMENT OF TRANSPORTATION

THRIE BEAM BARRIER TYPICAL VEGETATION CONTROL AT FIXED OBJECTS IN MEDIAN

NO SCALE

ALL DIMENSIONS ARE IN MILLIMETERS UNLESS OTHERWISE SHOWN

NSP A78C5 DATED OCTOBER 20, 2006 SUPPLEMENTS THE STANDARD PLANS BOOK DATED JULY 2006.

NEW STANDARD PLAN NSP A78C5

2004 NEW STANDARD PLAN NSP A78C5

7-24-06

DIST	COUNTY	ROUTE	KILOMETER POST TOTAL PROJECT	SHEET NO.	TOTAL SHEETS
01	Men	101	R69.4/R78.9	552	939

Caltrans Metric

REGISTERED CIVIL ENGINEER

November 17, 2006
PLANS APPROVAL DATE

REGISTERED PROFESSIONAL ENGINEER Michael Janzen No. 44788 Exp. 03-31-08 CIVIL STATE OF CALIFORNIA

The State of California or its officers or agents shall not be responsible for the accuracy or completeness of electronic copies of this plan sheet.

To get to the Caltrans web site, go to: http://www.dot.ca.gov

To accompany plans dated 1-23-12

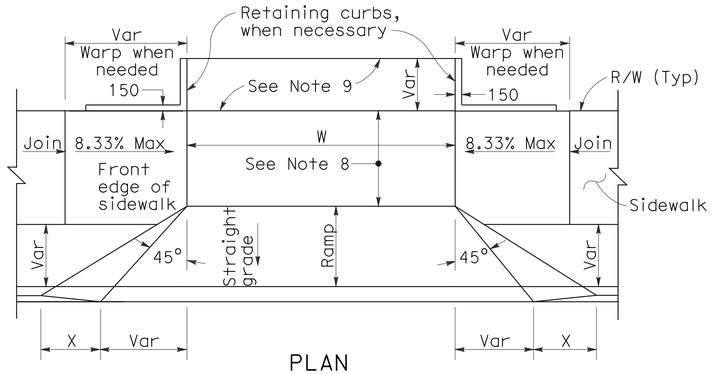

PLAN

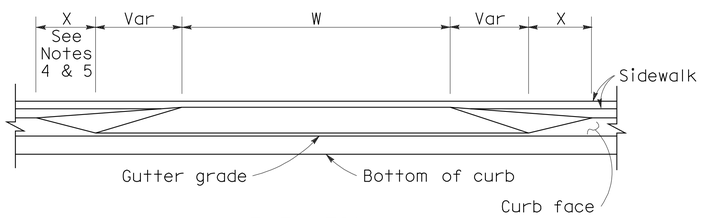

ELEVATION

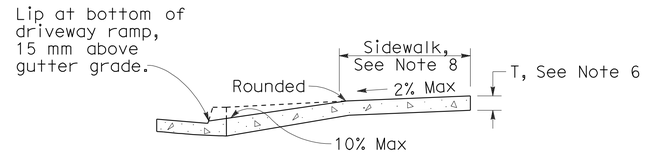

CASE A

Typical driveway, sidewalk not depressed

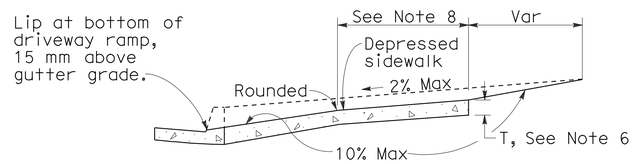

CASE B

Driveway with depressed sidewalk

SECTIONS

DRIVEWAYS

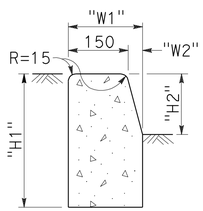

TYPE A1 CURBS

See Table A

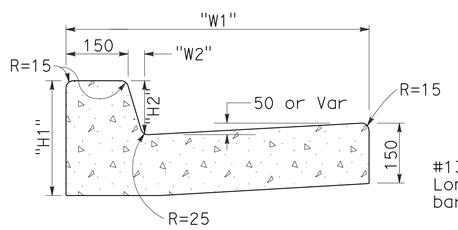

TYPE A2 CURBS

See Table A

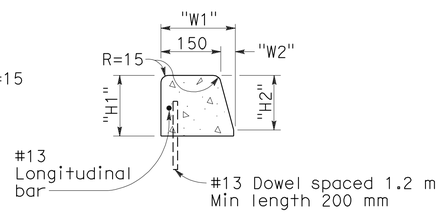

TYPE A3 CURBS

Superimposed on existing pavement
See Table A

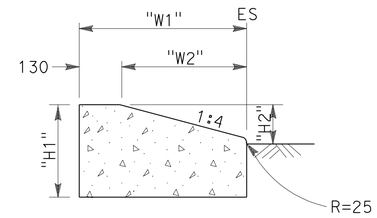

TYPE D CURBS

See Table A

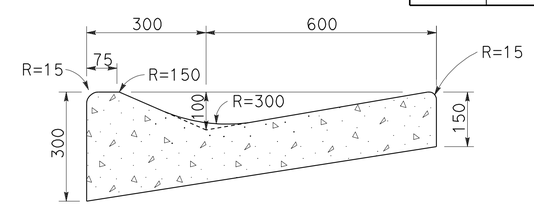

TYPE E CURB

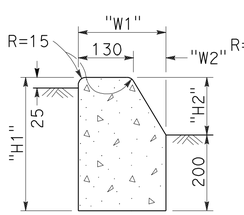

TYPE B1 CURBS

See Table A

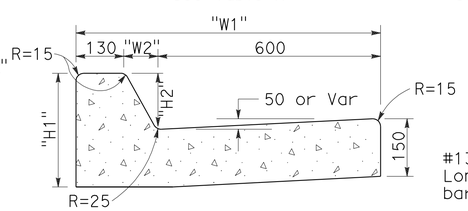

TYPE B2 CURBS

See Table A

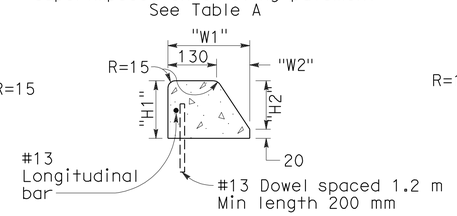

TYPE B3 CURBS

Superimposed on existing pavement
See Table A

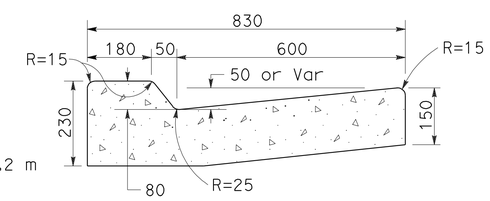

TYPE B4 CURBS

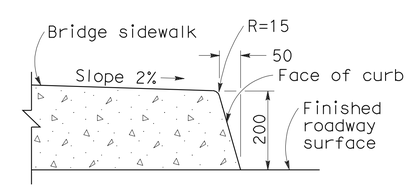

TYPE H CURB

On Bridges

CURBS

CURB QUANTITIES

TYPE	CUBIC METERS PER METER
A1-150	0.064
A1-200	0.075
A2-150	0.144
A2-200	0.155
A3-150	0.025
A3-200	0.035
B1-100	0.056
B1-150	0.073
B2-100	0.137
B2-150	0.152
B3-100	0.017
B3-150	0.027
B4	0.142
D-100	0.100
D-150	0.162
E	0.161

TABLE A

CURB TYPE	DIMENSIONS "H1"	"H2"	"W1"	"W2"
A1-150	350	150	190	40
A1-200	400	200	200	50
A2-150	300	150	790	40
A2-200	350	200	800	50
A3-150	150	130	185	35
A3-200	200	180	198	48
B1-100	300	100	200	70
B1-150	350	150	230	100
B2-100	250	100	800	70
B2-150	300	150	830	100
B3-100	100	80	185	55
B3-150	150	130	217	87
D-100	250	100	452	322
D-150	300	150	652	522

NOTES

1. Case A driveway section typically applies.
2. Use Case B driveway section when ramp slopes would exceed 10% in Case A.
3. Use Case B driveway section when sidewalk cross slope would exceed 2% in Case A.
4. X=900 mm except for curb heights over 250 mm where 1:4 slopes shall be used on curb slope.
5. X is a variable when sidewalk is located where wheelchairs may traverse the surface. Slopes shall not exceed 8.33%.
6. Sidewalk and ramp thickness ``T'' at driveway shall be 100 mm for residental and 150 mm for commercial.
7. Difference in slope of the driveway ramp and the slope of a line between the gutter and a point on the roadway 1.5 meters from gutter line shall not exceed 15%. Reduce driveway ramp slope, not gutter slope, where required.
8. Minimum width of clear passageway for sidewalk shall be 1.22 meters.
9. Retaining curbs and acquisition of construction easement may be necessary for narrow sidewalks or curb heights in excess of 150 mm.
10. Across the pedestrian route at curb ramp locations, the gutter pan slope shall not exceed 25 mm of depth for each 600 mm of width.

STATE OF CALIFORNIA
DEPARTMENT OF TRANSPORTATION

CURBS AND DRIVEWAYS

NO SCALE

ALL DIMENSIONS ARE IN MILLIMETERS UNLESS OTHERWISE SHOWN

RSP A87A DATED NOVEMBER 17, 2006 SUPERSEDES STANDARD PLAN A87A DATED JULY 1, 2004-PAGE 115 OF THE STANDARD PLANS BOOK DATED JULY 2004.

REVISED STANDARD PLAN RSP A87A

2004 REVISED Std PLAN RSP A87A

10-25-06

DIST	COUNTY	ROUTE	KILOMETER POST TOTAL PROJECT	SHEET NO.	TOTAL SHEETS
01	Men	101	R69.4/R78.9	553	939

REGISTERED CIVIL ENGINEER

December 16, 2005
PLANS APPROVAL DATE

REGISTERED PROFESSIONAL ENGINEER Hector David Cordova No. C41957 Exp. 3-31-06 CIVIL STATE OF CALIFORNIA

The State of California or its officers or agents shall not be responsible for the accuracy or completeness of electronic copies of this plan sheet.

To get to the Caltrans web site, go to: http://www.dot.ca.gov

To accompany plans dated 1-23-12

Caltrans Metric

2004 REVISED Std PLAN RSP A88A

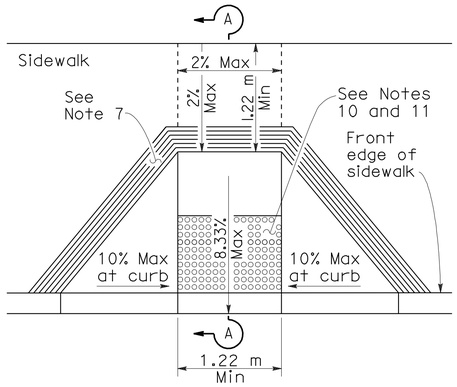

CASE A

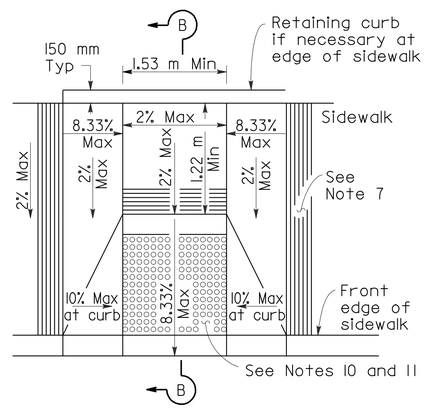

CASE B

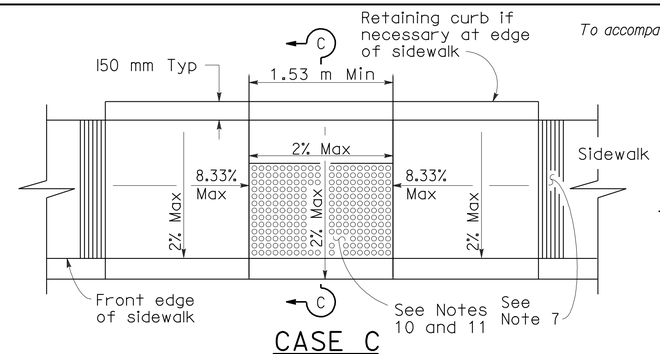

CASE C

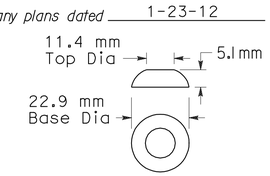

RAISED TRUNCATED DOME

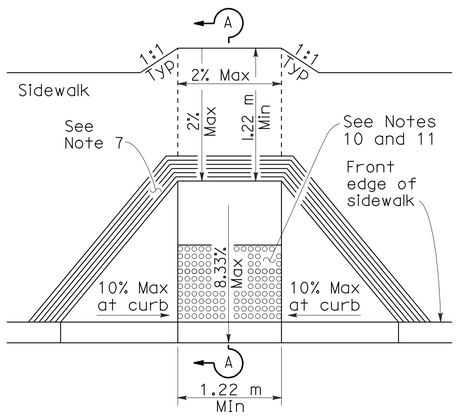

CASE D

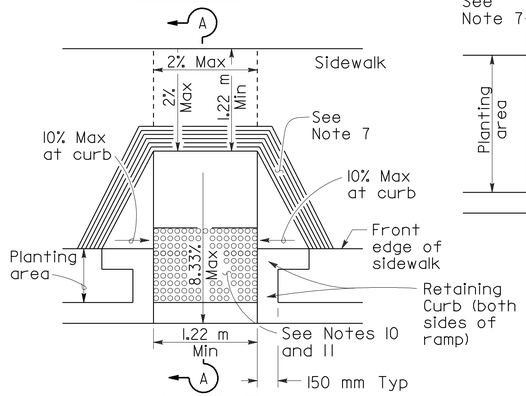

CASE E

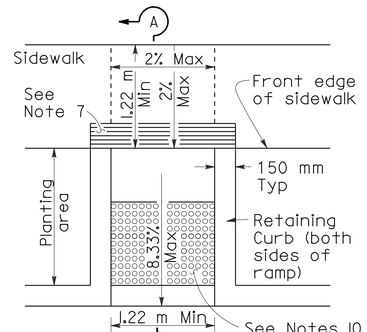

CASE F

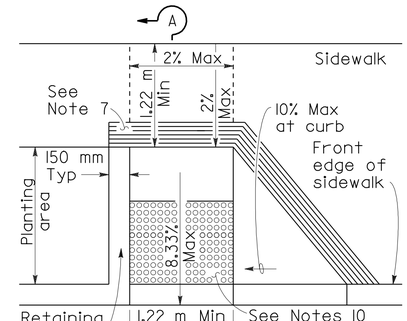

CASE G

See Note 4

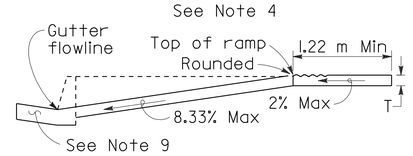

SECTION A-A

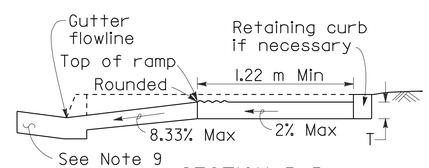

SECTION B-B

Depress entire sidewalk as required

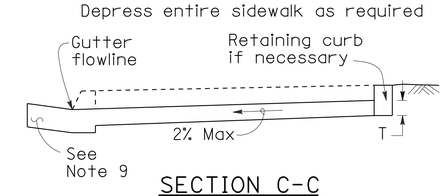

SECTION C-C

NOTES

1. As site conditions dictate, Case A through Case G curb ramps may be used for corner installations similar to those shown in Detail A and Detail B. The case of curb ramps used in Detail A do not have to be the same. Case A through Case G curb ramps also may be used at mid block locations, as site conditions dictate. For Cases B and C, the side of the curb ramp should always be perpendicular to curb face.
2. If distance from curb to back of sidewalk is too short to accommodate ramp and 1.22 m platform (landing) as shown in Case A, the sidewalk may be depressed longitudinally as in Case B, or C or may be widened as in Case D.
3. When ramp is located in center of curb return, crosswalk configuration must be similar to that shown for Detail B.
4. As site conditions dictate, the retaining curb side and the flared side of the Case G ramp shall be constructed in reversed position.
5. If located on a curve, the sides of the ramp need not be parallel, but the minimum width of the ramp shall be 1.22 m.
6. Side slope of ramp flares vary uniformly from a maximum of 10% at curb to conform with longitudinal sidewalk slope adjacent to top of the ramp, except in Case C and Case F.
7. The curb ramp shall be outlined, as shown, with a 305 mm wide border with 6 mm grooves approximately 19 mm on center. See grooving detail.
8. Transitions from ramps and landings to walks, gutters or streets shall be flush and free of abrupt changes.
9. Maximum slopes of adjoining gutters, the road surface immediately adjacent to the curb ramp, or accessible route shall not exceed 5 percent within 1.22 m of the top and bottom of the curb ramp.
10. Curb ramps shall have a detectable warning surface that extends the full width and 914 mm depth of the ramp. Detectable Warning Surfaces shall conform to the details on this plan and the requirements in the Special Provisions.
11. The edge of the detectable warning surface nearest the street shall be between 150 mm and 205 mm from the gutter flowline.
12. Sidewalk and ramp thickness, "T", shall be 90 mm minimum.
13. Utility pull boxes, manholes, vaults and all other utility facilities within the boundaries of the curb ramp will be relocated or adjusted to grade by the owner prior to, or in conjunction with, curb ramp construction.
14. For retrofit conditions, removal and replacement of curb apron will be at the Contractor's option, unless otherwise shown on project plans.

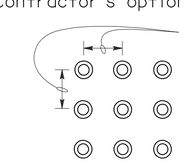

RAISED TRUNCATED DOME PATTERN (IN-LINE)

DETECTABLE WARNING SURFACE

See Note 10

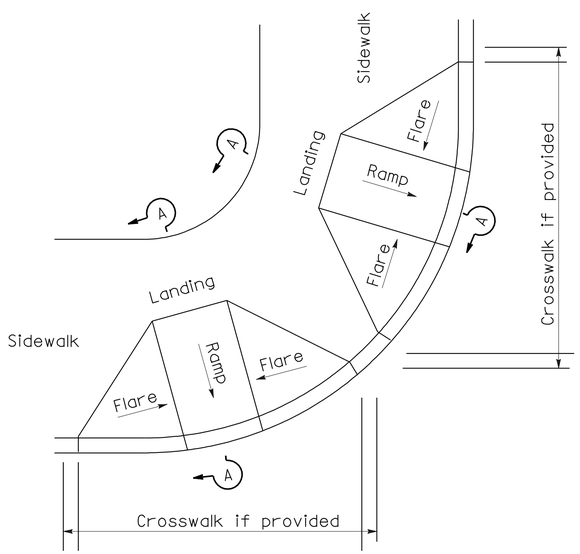

DETAIL A

TYPICAL TWO-RAMP CORNER INSTALLATION

See Note 1

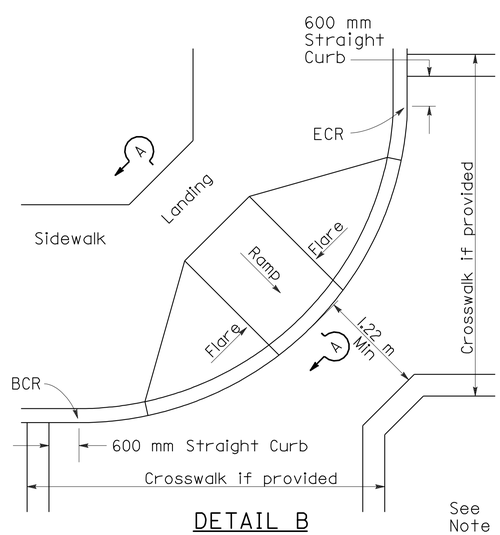

DETAIL B

TYPICAL ONE-RAMP CORNER INSTALLATION

See Notes 1 and 3

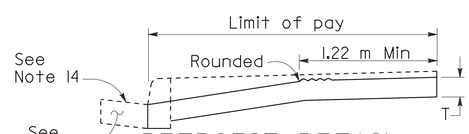

RETROFIT DETAIL

Existing curb and sidewalk

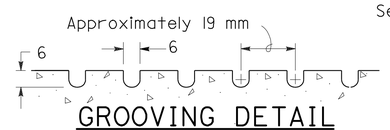

GROOVING DETAIL

STATE OF CALIFORNIA
DEPARTMENT OF TRANSPORTATION

CURB RAMP DETAILS

NO SCALE

ALL DIMENSIONS ARE IN MILLIMETERS UNLESS OTHERWISE SHOWN

RSP A88A DATED DECEMBER 16, 2005 SUPERSEDES STANDARD PLAN A88A DATED JULY 1, 2004-PAGE 117 OF THE STANDARD PLANS BOOK DATED JULY 2004.

REVISED STANDARD PLAN RSP A88A

12-16-05

DIST	COUNTY	ROUTE	KILOMETER POST TOTAL PROJECT	SHEET NO.	TOTAL SHEETS
01	Men	101	R69.4/R78.9	554	939

Caltrans Metric

REGISTERED CIVIL ENGINEER

December 16, 2005
PLANS APPROVAL DATE

REGISTERED PROFESSIONAL ENGINEER Hector David Cordova No. C41957 Exp. 3-31-06 CIVIL STATE OF CALIFORNIA

The State of California or its officers or agents shall not be responsible for the accuracy or completeness of electronic copies of this plan sheet.

To get to the Caltrans web site, go to: http://www.dot.ca.gov

To accompany plans dated 1-23-12

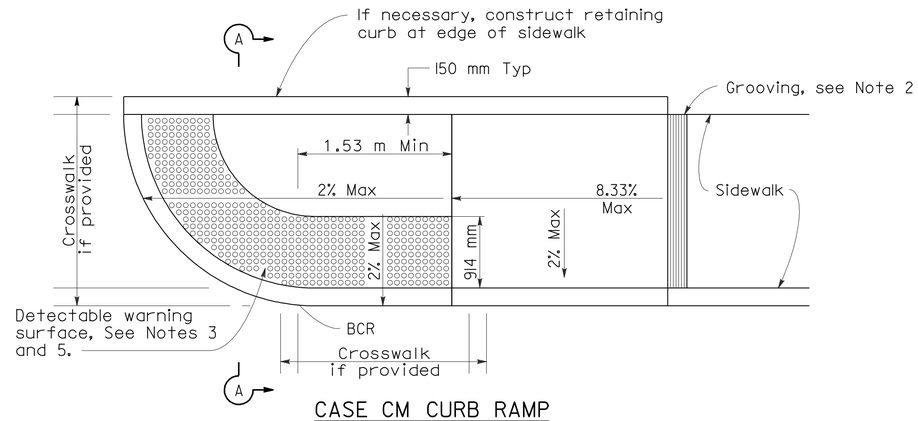

CASE CM CURB RAMP

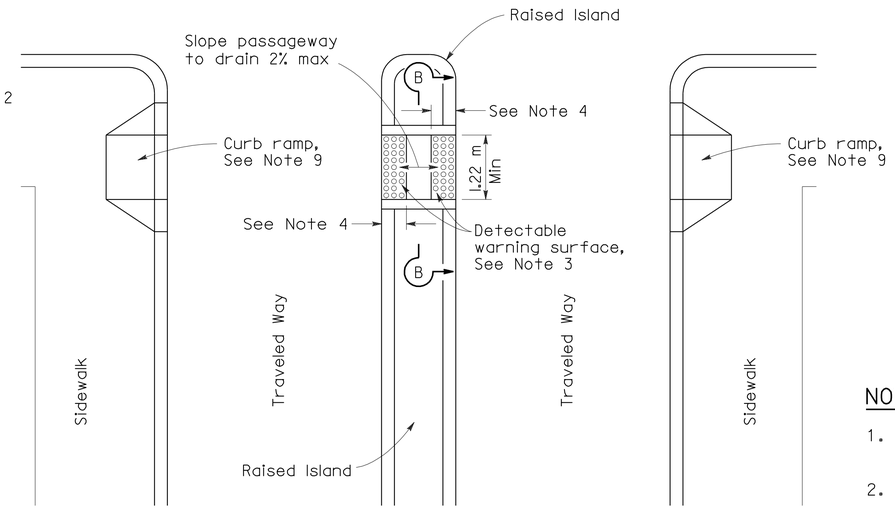

TYPE A PASSAGEWAY

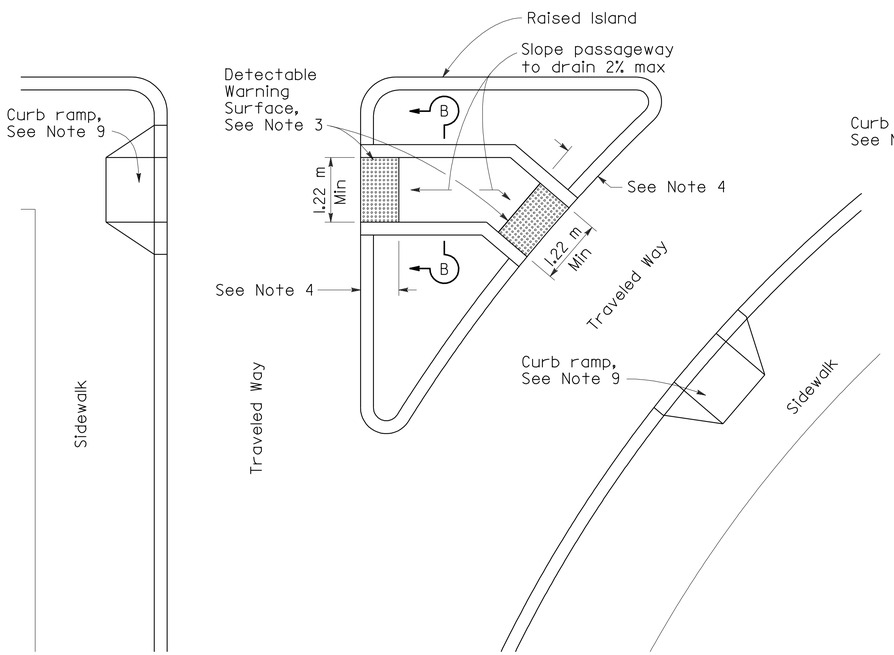

TYPE B PASSAGEWAY

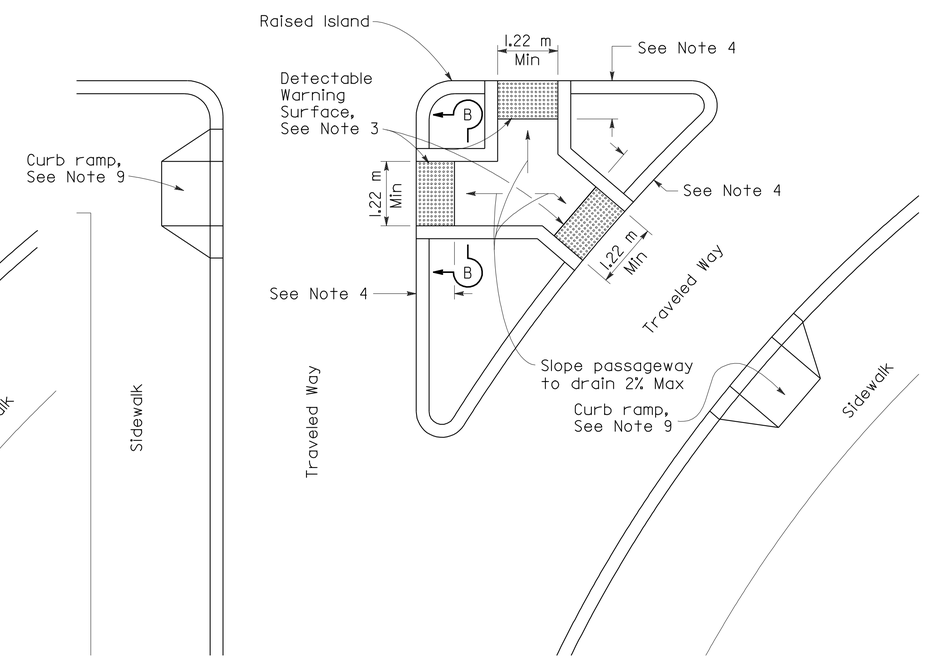

TYPE C PASSAGEWAY

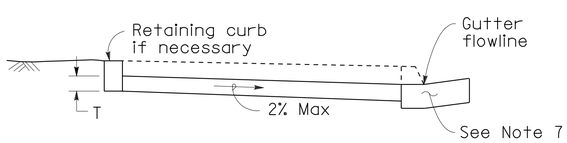

SECTION A-A

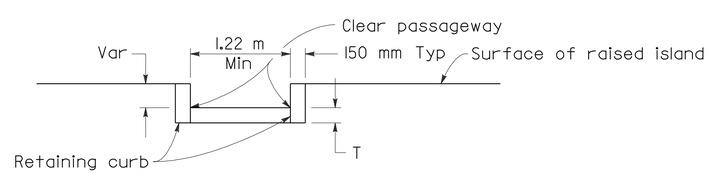

SECTION B-B

NOTES

1. Sidewalk, ramp and passageway thickness, ``T'', shall be 90 mm minimum.
2. For details of grooving used with Case CM curb ramp, see Revised Standard Plan RSP A88A.
3. For details of detectable warning surfaces, see Revised Standard Plan RSP A88A.
4. Where an island passage way length is less than 1.8 m, the detectable warning surface shall extend the full width and full depth of the passage way length. Where an island passage way length is greater than or equal to 1.8 m, but less than 2.44 m, each detectable warning surface shall extend the full width and 600 mm depth of the passage way length. Where an island passage way length is greater than or equal to 2.44 m, each detectable warning surface shall extend the full width and 914 mm depth of the passage way length.
5. For Case CM curb ramp, the edge of the detectable warning surface nearest the street shall be between 150 mm and 205 mm from the gutter flowline.
6. Transitions from ramps to walks, gutters or streets shall be flush and free of abrupt changes.
7. Maximum slopes of adjoining gutters, the road surface immediately adjacent to the curb ramp, or accessible route shall not exceed 5 percent within 1.22 m of the top and bottom of the curb ramp.
8. Utility pull boxes, manholes, vaults and all other utility facilities within the boundaries of the curb ramp will be relocated or adjusted to grade by the owner prior to, or in conjunction with, curb ramp construction.
9. For additional curb ramp details, see Revised Standard Plan RSP A88A.

STATE OF CALIFORNIA
DEPARTMENT OF TRANSPORTATION

CURB RAMP AND ISLAND PASSAGEWAY DETAILS

NO SCALE

ALL DIMENSIONS ARE IN MILLIMETERS UNLESS OTHERWISE SHOWN

RSP A88B DATED DECEMBER 16, 2005 SUPERSEDES STANDARD PLAN A88B DATED JULY 1, 2004-PAGE 118 OF THE STANDARD PLANS BOOK DATED JULY 2004.

REVISED STANDARD PLAN RSP A88B

2004 REVISED Std PLAN RSP A88B

12-16-05

DIST	COUNTY	ROUTE	KILOMETER POST TOTAL PROJECT	SHEET NO.	TOTAL SHEETS
01	Men	101	R69.4/R78.9	555	939

Caltrans Metric

William K. Farnbach
REGISTERED CIVIL ENGINEER

November 17, 2006
PLANS APPROVAL DATE

REGISTERED PROFESSIONAL ENGINEER William K. Farnbach No. 49042 Exp. 09-30-08 CIVIL STATE OF CALIFORNIA

The State of California or its officers or agents shall not be responsible for the accuracy or completeness of electronic copies of this plan sheet.

To get to the Caltrans web site, go to: http://www.dot.ca.gov

To accompany plans dated 1-23-12

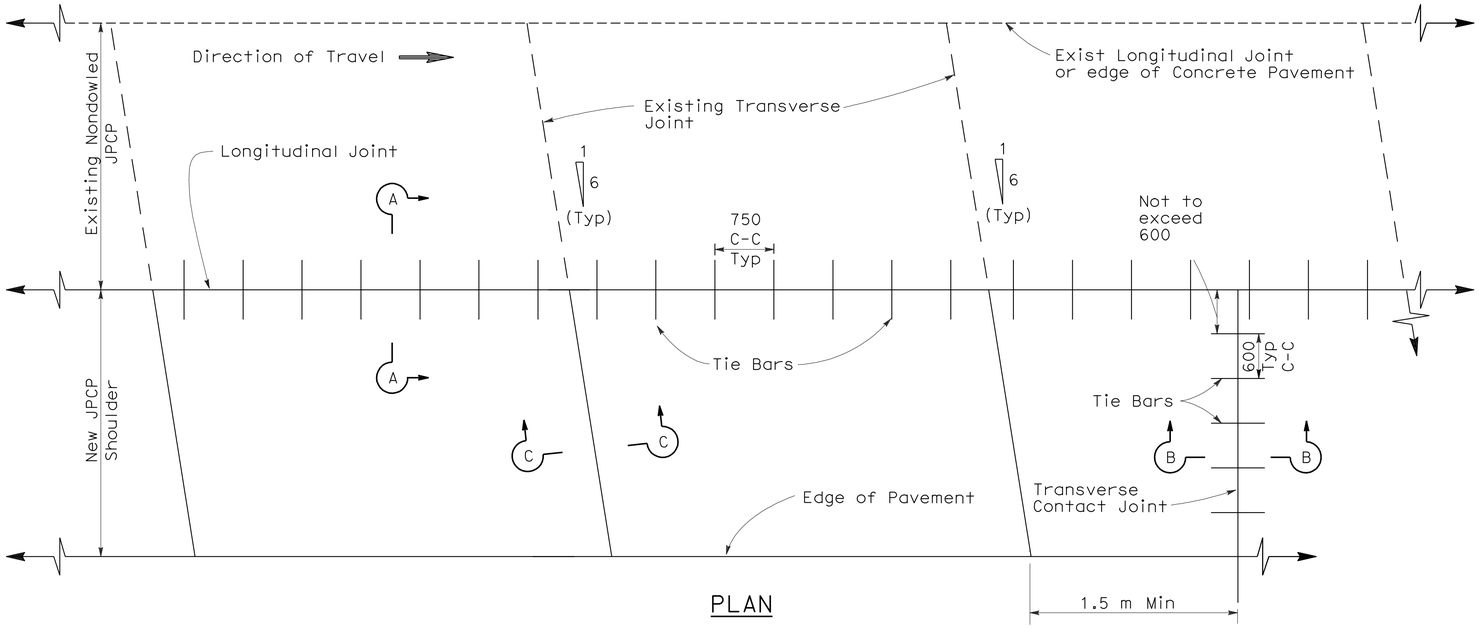

PLAN

NOTES

1. New transverse weakened plane joints shall match the skewed offset and spacing of the adjacent existing weakened plane joints, as shown.
2. Transverse contact joints, with tie bars spaced as shown, shall be installed at the end of paving operations. Transverse contact joints shall be placed at least 1.5 m from any weakened plane joint.
3. This Standard Plan only applicable for constructing a nondoweled JPCP shoulder next to existing nondoweled JPCP lane.

TABLE A

Tie Bar Spacing		
Panel Length (m)	Total Tie Bars per Panel	Clearance Tie Bar to Transverse Joint (mm)
2.74	3	380
2.90	3	420
3.66	5	400
3.96	5	550
4.27	5	705
4.57	6	500

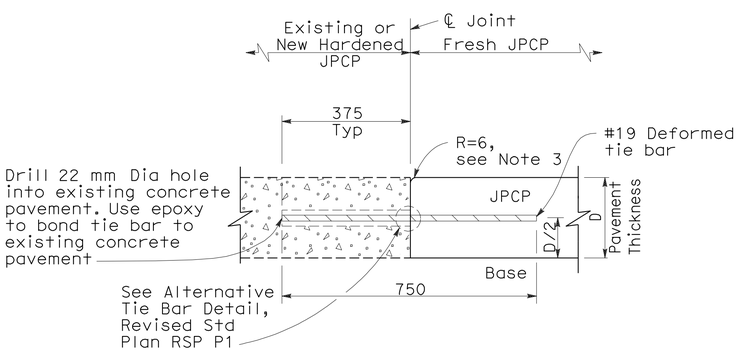

SECTION A-A
LONGITUDINAL JOINT
(Between fresh and hardened concrete)

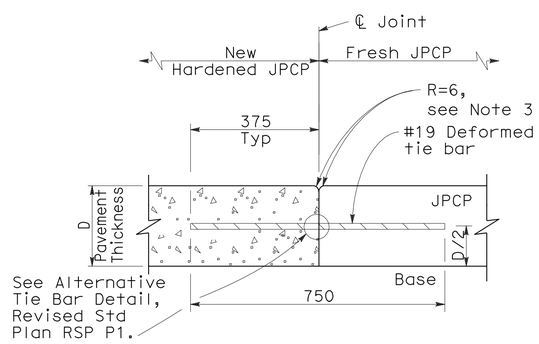

SECTION B-B
TRANSVERSE CONTACT JOINT

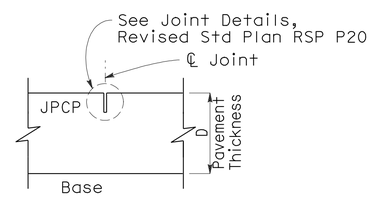

SECTION C-C
TRANSVERSE WEAKENED PLANE JOINT

STATE OF CALIFORNIA
DEPARTMENT OF TRANSPORTATION

JOINTED PLAIN CONCRETE PAVEMENT-NONDOWELED SHOULDER ADDITION/RECONSTRUCTION

NO SCALE

ALL DIMENSIONS ARE IN MILLIMETERS UNLESS OTHERWISE SHOWN

NSP P3 DATED NOVEMBER 17, 2006 SUPPLEMENTS STANDARD PLANS BOOK DATED JULY 2004.

NEW STANDARD PLAN NSP P3

2004 NEW Std PLAN NSP P3

10-24-06

To accompany plans dated 1-23-12

Caltrans Metric

DIST	COUNTY	ROUTE	KILOMETER POST TOTAL PROJECT	SHEET NO.	TOTAL SHEETS
01	Men	101	R69.4/R78.9	556	939

William K. Farnbach
REGISTERED CIVIL ENGINEER

November 17, 2006
PLANS APPROVAL DATE

REGISTERED PROFESSIONAL ENGINEER William K. Farnbach No. 49042 Exp. 09-30-08 CIVIL STATE OF CALIFORNIA

The State of California or its officers or agents shall not be responsible for the accuracy or completeness of electronic copies of this plan sheet.

To get to the Caltrans web site, go to: http://www.dot.ca.gov

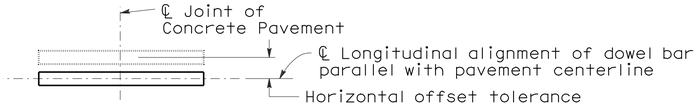

PLAN

HORIZONTAL OFFSET TOLERANCE

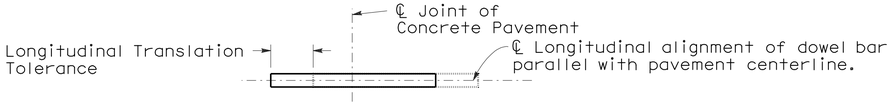

PLAN

LONGITUDINAL TRANSLATION TOLERANCE

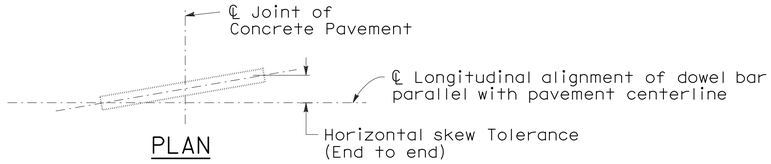

PLAN

HORIZONTAL SKEW TOLERANCE

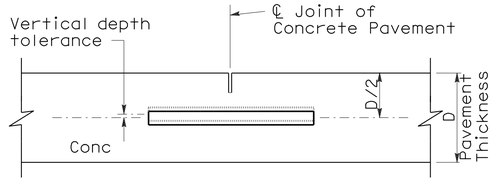

ELEVATION

VERTICAL DEPTH TOLERANCE

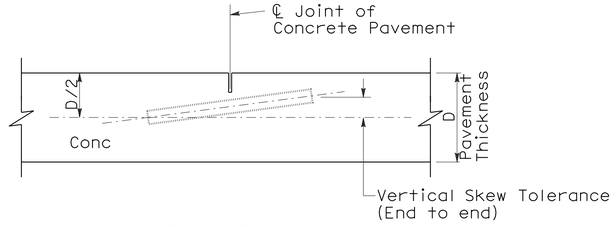

ELEVATION

VERTICAL SKEW TOLERANCE

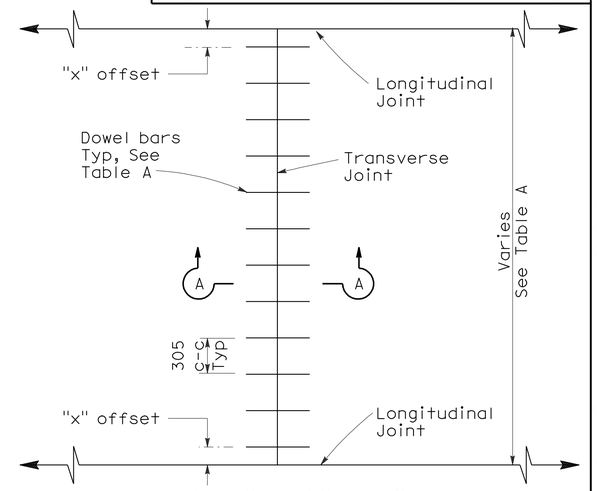

TRANSVERSE JOINT DOWEL BAR LAYOUT

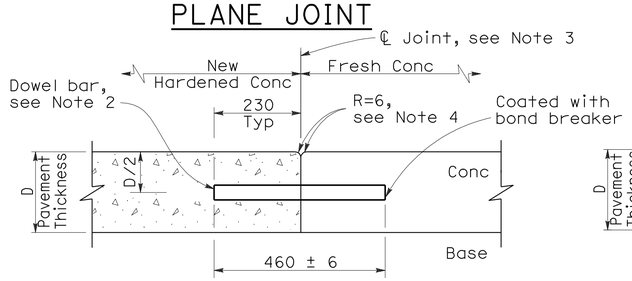

TRANSVERSE CONTACT JOINT DETAIL

SECTION A-A

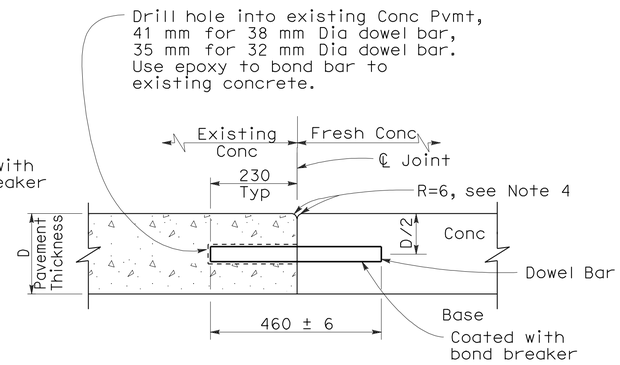

TRANSVERSE CONTACT JOINT FOR EXISTING CONCRETE PAVEMENT

(Drill and bond locations)

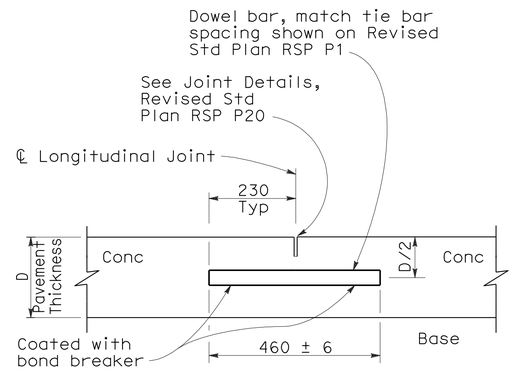

LONGITUDINAL WEAKENED PLANE JOINT WITH DOWEL BARS

(See Revised Std Plan RSP P18)

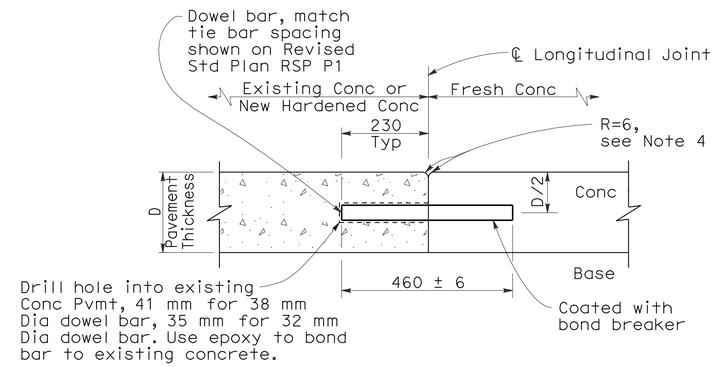

LONGITUDINAL CONTACT JOINT WITH DOWEL BARS

(See Revised Std Plan RSP P18)

TABLE A

Dowel Bar Transverse Spacing Table		
Width between Longitudinal Joints (m)	Offset Dimension "x" (mm)	Number of Dowels between Longitudinal Joints
4.27	152	14
3.66	152	12
3.60	125	12
3.05	152	10
3.00	125	10
2.44	152	8
2.4	130	8
1.52	150	5
1.50	140	5

See Note 3

NOTES

1. See Revised Standard Plan RSP P1 for typical dowel placement and locations.
2. 38 mm Dia smooth dowels are to be used with a pavement thickness, D, equal to or greater than 215 mm. For pavement thickness, D, less than 215 mm, use 32 mm Dia smooth dowels.
3. For widths not shown, see Project Plans.
4. If fresh concrete pavement is placed adjacent to existing concrete pavement, the top corner of the existing concrete pavement does not need to be rounded to the 6 mm radius, as shown.

STATE OF CALIFORNIA
DEPARTMENT OF TRANSPORTATION

CONCRETE PAVEMENT-DOWEL BAR DETAILS

NO SCALE

ALL DIMENSIONS ARE IN MILLIMETERS UNLESS OTHERWISE SHOWN

RSP P10 DATED NOVEMBER 17, 2006 SUPERSEDES STANDARD PLAN P10 DATED JULY 1, 2004-PAGE 125 OF THE STANDARD PLANS BOOK DATED JULY 2004.

REVISED STANDARD PLAN RSP P10

2004 REVISED Std PLAN RSP P10

10-25-06

DIST	COUNTY	ROUTE	KILOMETER POST TOTAL PROJECT	SHEET NO.	TOTAL SHEETS
01	Men	101	R69.4/R78.9	557	939

Caltrans Metric

William K. Farnbach
REGISTERED CIVIL ENGINEER

November 17, 2006
PLANS APPROVAL DATE

REGISTERED PROFESSIONAL ENGINEER William K. Farnbach No. 49042 Exp. 09-30-08 CIVIL STATE OF CALIFORNIA

The State of California or its officers or agents shall not be responsible for the accuracy or completeness of electronic copies of this plan sheet.

To get to the Caltrans web site, go to: http://www.dot.ca.gov

To accompany plans dated 1-23-12

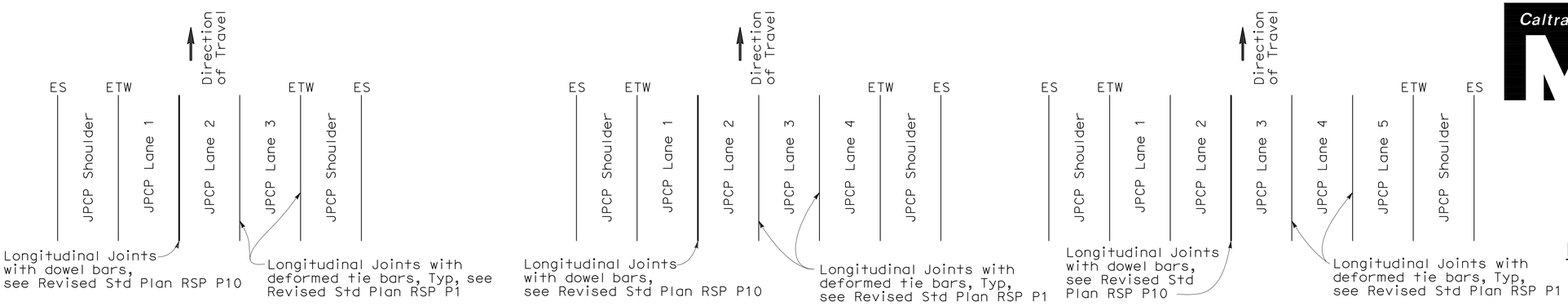

3 LANES WITH CONCRETE SHOULDERS
PLAN

4 LANES WITH CONCRETE SHOULDERS
PLAN

5 LANES WITH CONCRETE SHOULDERS
PLAN

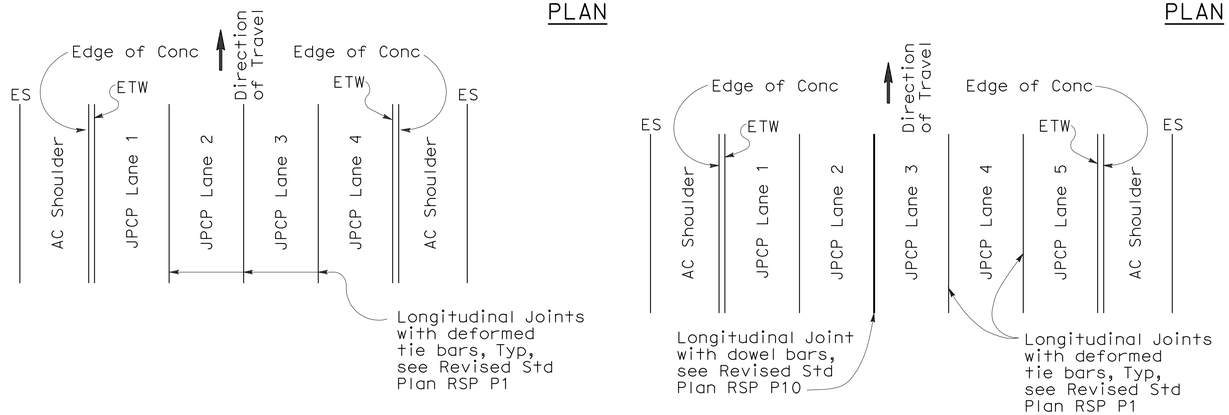

4 LANES OR LESS WITH AC SHOULDERS
PLAN

5 LANES WITH AC SHOULDERS
PLAN

NOTES

1. Where Lean Concrete Base is not used as base material, the joint filler material used for the longitudinal isolation joint shall only extend to the bottom of the new concrete slab. See Detail A.
2. Use 16±1 mm dimension for silicone sealant.
3. See Revised Stadard Plan RSP P10 for longitudinal joint with dowel bars.

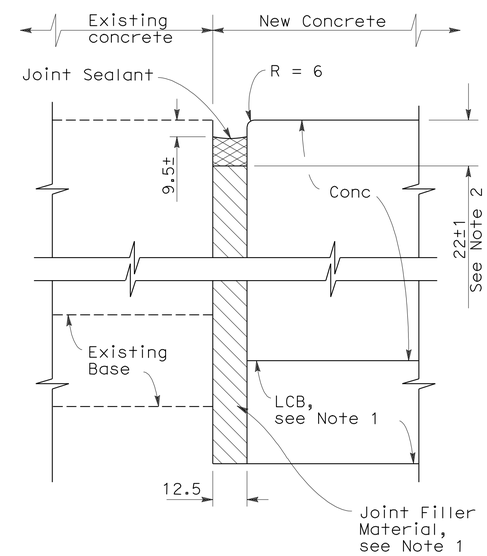

DETAIL A

ISOLATION JOINT

NEW CONSTRUCTION

Location of Longitudinal Joints (JPCP only)

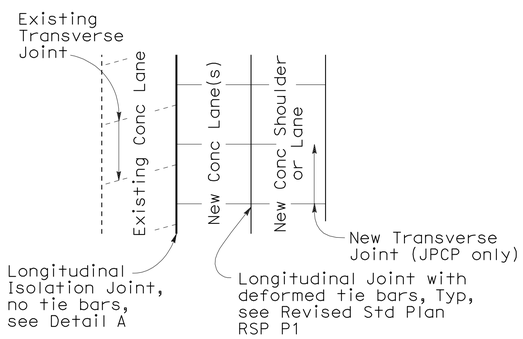

CASE 1
PLAN

Transverse Joints do not align between new and existing

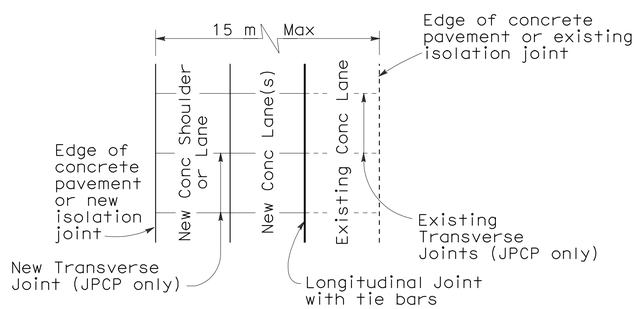

CASE 2
PLAN

Transverse Joints align between new and existing

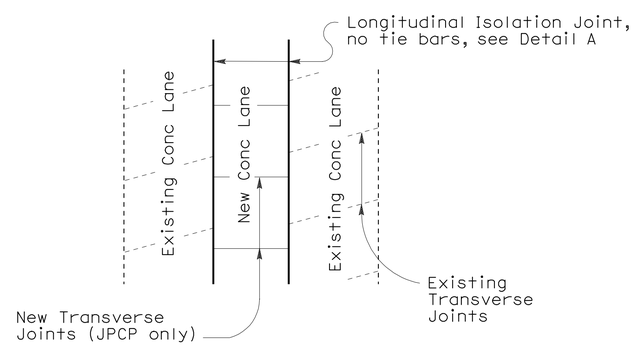

CASE 3 (INTERIOR LANE REPLACEMENT)
PLAN

Transverse Joints do not align between new and existing

LANE/SHOULDER ADDITION OR RECONSTRUCTION

For JPCP and Continuous Reinforced Concrete Pavement

STATE OF CALIFORNIA
DEPARTMENT OF TRANSPORTATION

CONCRETE PAVEMENT-LANE SCHEMATICS AND ISOLATION JOINT DETAIL

NO SCALE

ALL DIMENSIONS ARE IN MILLIMETERS UNLESS OTHERWISE SHOWN

RSP P18 DATED NOVEMBER 17, 2006 SUPERSEDES STANDARD PLAN P18 DATED JULY 1, 2004-PAGE 128 OF THE STANDARD PLANS BOOK DATED JULY 2004.

REVISED STANDARD PLAN RSP P18

2004 REVISED Std PLAN RSP P18

8-9-06

NOTE

1. Tie bars, dowel bars, and reinforcement are not shown in joint seal details, see Revised Std Plan RSP P1, New Std Plan NSP P3, Revised Std Plan RSP P10, Std Plan P35, Std Plan P45, or Std Plan P46 as applicable.

To accompany plans dated 1-23-12

Caltrans Metric

DIST	COUNTY	ROUTE	KILOMETER POST TOTAL PROJECT	SHEET NO.	TOTAL SHEETS
01	Men	101	R69.4/R78.9	558	939

William K. Farnbach
REGISTERED CIVIL ENGINEER

November 17, 2006
PLANS APPROVAL DATE

REGISTERED PROFESSIONAL ENGINEER William K. Farnbach No. 49042 Exp. 09-30-08 CIVIL STATE OF CALIFORNIA

The State of California or its officers or agents shall not be responsible for the accuracy or completeness of electronic copies of this plan sheet.

To get to the Caltrans web site, go to: http://www.dot.ca.gov

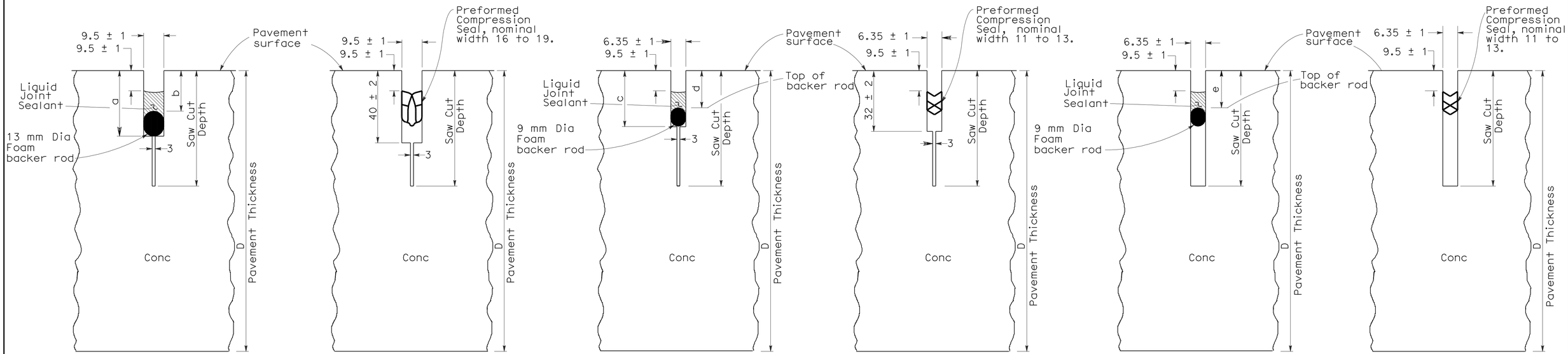

LIQUID SEALANT | COMPRESSION SEAL

TYPE A1

Transverse Weakened Plane Joints

LIQUID SEALANT | COMPRESSION SEAL

TYPE A2

Longitudinal Weakened Plane Joints

LIQUID SEALANT | COMPRESSION SEAL

TYPE B

Longitudinal or Transverse Weakened Plane Joints

LIQUID SEALANT RESERVOIR DEPTH

LIQUID SEALANT MATERIAL	9.5 mm Joint Width Type A1		6.35 mm Joint Width Type A2		6.35 mm Joint Width Type B
	DIMENSION		DIMENSION		DIMENSION
	a	b	c	d	e
SILICONE	26 ± 1	15 ± 1	23 ± 1	14 ± 1	14 ± 1
ASPHALT RUBBER	30 ± 1	19 ± 1	26 ± 1	17 ± 1	17 ± 1

TABLE A

Sawn Joint Width	Backer Rod Diameter	Dimension "c"	Dimension "d"
mm	mm ± 1	mm	mm
25	33	22	55
22	30	20	50
19	25	19	44
16	22	18	40
13	17	16	33

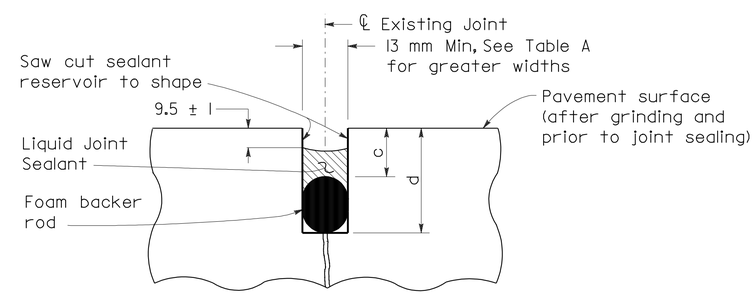

LIQUID SEALANT TYPE R

Retrofit Transverse and Longitudinal Joints

STATE OF CALIFORNIA
DEPARTMENT OF TRANSPORTATION

CONCRETE PAVEMENT-JOINT DETAILS

NO SCALE

ALL DIMENSIONS ARE IN MILLIMETERS UNLESS OTHERWISE SHOWN

RSP P20 DATED NOVEMBER 17, 2006 SUPERSEDES STANDARD PLAN P20 DATED JULY 1, 2004-PAGE 129 OF THE STANDARD PLANS BOOK DATED JULY 2004.

REVISED STANDARD PLAN RSP P20

2004 REVISED Std PLAN RSP P20

10-24-06

DIST	COUNTY	ROUTE	KILOMETER POST TOTAL PROJECT	SHEET NO.	TOTAL SHEETS
01	Men	101	R69.4/R78.9	559	939

Caltrans Metric

Raymond Don Tsztoo
REGISTERED CIVIL ENGINEER

June 6, 2008
PLANS APPROVAL DATE

REGISTERED PROFESSIONAL ENGINEER
Raymond Don Tsztoo
No. C37332
Exp. 6-30-08
CIVIL
STATE OF CALIFORNIA

The State of California or its officers or agents shall not be responsible for the accuracy or completeness of electronic copies of this plan sheet.

To get to the Caltrans web site, go to: http://www.dot.ca.gov

To accompany plans dated 1-23-12

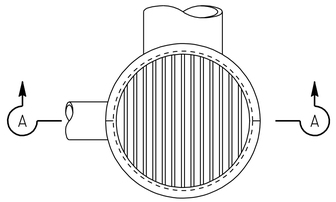

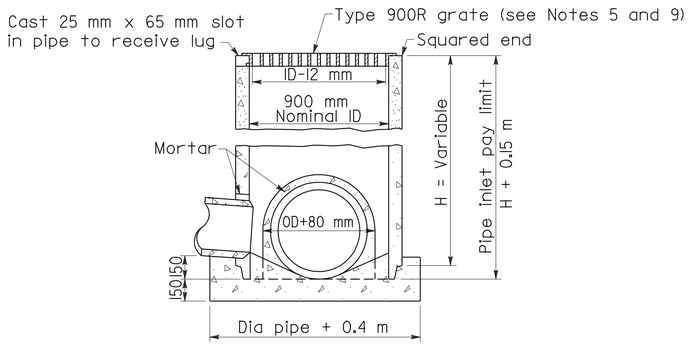

SECTION A-A

TYPE GCP

CONCRETE PIPE INLET WITH GRATE

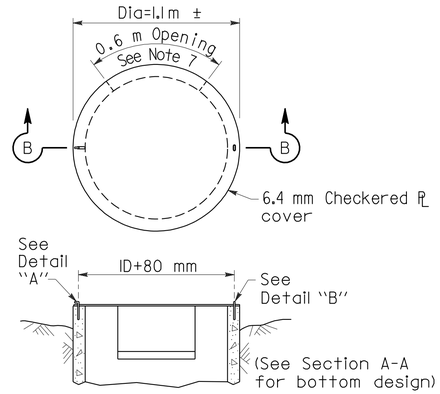

SECTION B-B

TYPE OCP or OCPI

CONCRETE PIPE INLET WITH STEEL COVER
(See Note 6)

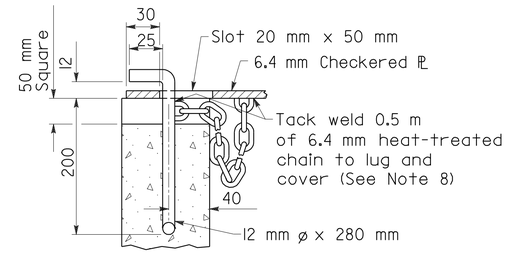

DETAIL "A"

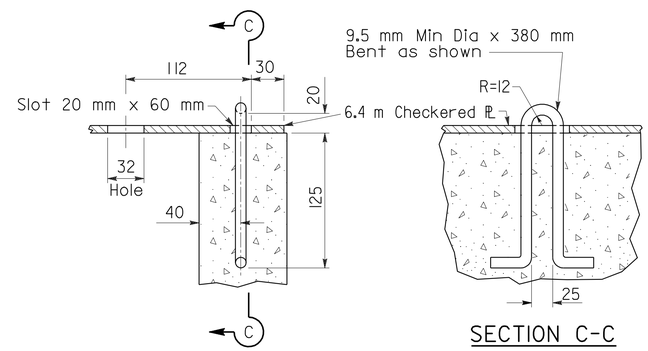

DETAIL "B"

SECTION C-C

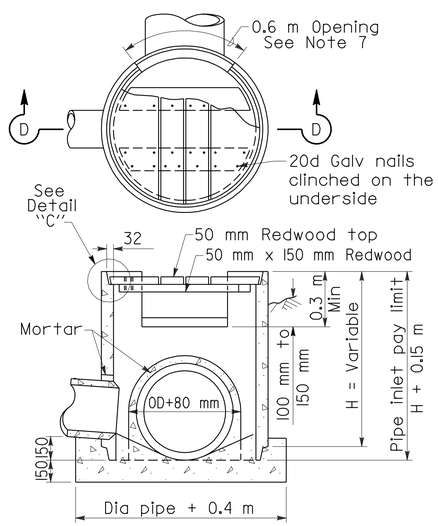

SECTION D-D

TYPE OCP or OCPI

CONCRETE PIPE INLET WITH REDWOOD COVER
(See Notes 6 and 10)

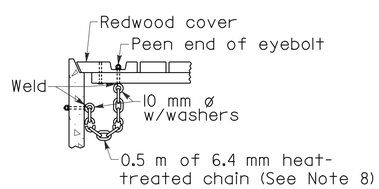

DETAIL "C"

NOTES

1. For details of steel pipe inlets, see Standard Plan D75A.
2. For details of ladder and steps and when ladder or steps are required, see Standard Plan D75C.
3. Inlet pipes shall not protrude into basin.
4. Except for inlets used for junction boxes, basin floors shall have minimum slope of 1:4 from all directions toward outlet pipe, and a wood trowel finish.
5. See Revised Standard Plan RSP D77A and Standard Plan D77B for Grate and Frame Details and Weights of Miscellaneous Iron and Steel.
6. Designation of Type OCPI pipe inlets on plans indicates trash racks are to be furnished and installed on all side openings. See Standard Plan D75C for Trash Rack details.
7. More than one side opening may be required. Location and number as ordered by the Engineer. Opening may be cast in pipe.
8. Chain to be provided when specified.
9. Place pipe so bars of grate will be parallel with main surface flow.
10. Redwood covers shall only be placed at locations designated on the plans.

STATE OF CALIFORNIA
DEPARTMENT OF TRANSPORTATION

PIPE INLETS

NO SCALE

ALL DIMENSIONS ARE IN MILLIMETERS UNLESS OTHERWISE SHOWN

RSP D75B DATED JUNE 6, 2008 SUPERSEDES STANDARD PLAN D75B
DATED July 1, 2004 - PAGE 153 OF THE STANDARD PLANS BOOK DATED July 2004.

REVISED STANDARD PLAN RSP D75B

2004 REVISED Std PLAN RSP D75B

05-20-08

DIST	COUNTY	ROUTE	KILOMETER POST TOTAL PROJECT	SHEET NO.	TOTAL SHEETS
01	Men	101	R69.4/R78.9	560	939

Caltrans Metric

Raymond Don Tsztoo
REGISTERED CIVIL ENGINEER

January 18, 2008
PLANS APPROVAL DATE

REGISTERED PROFESSIONAL ENGINEER Raymond Don Tsztoo No. C37332 Exp. 6-30-08 CIVIL STATE OF CALIFORNIA

The State of California or its officers or agents shall not be responsible for the accuracy or completeness of electronic copies of this plan sheet.

To get to the Caltrans web site, go to: http://www.dot.ca.gov

To accompany plans dated 1-23-12

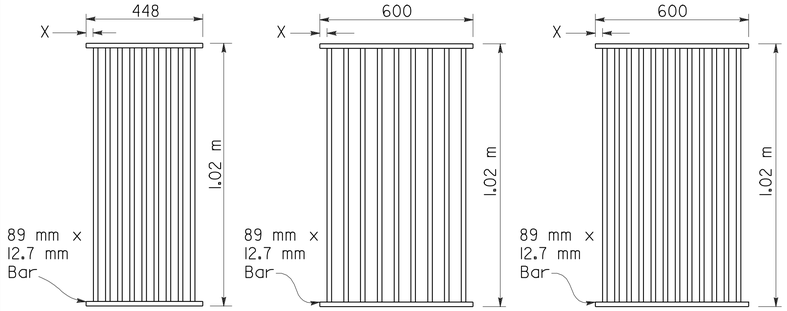

TYPE 450-9

35 mm Clear spacing. Use within the roadbed on highways where bicycles and pedestrians are excluded.

TYPE 600-9

51 mm Clear spacing. Use in locations off the roadbed on all types of highways.

TYPE 600-12

35 mm Clear spacing. Use within the roadbed on highways where bicycles and pedestrians are excluded.

RECTANGULAR GRATE DETAILS

(See table below)

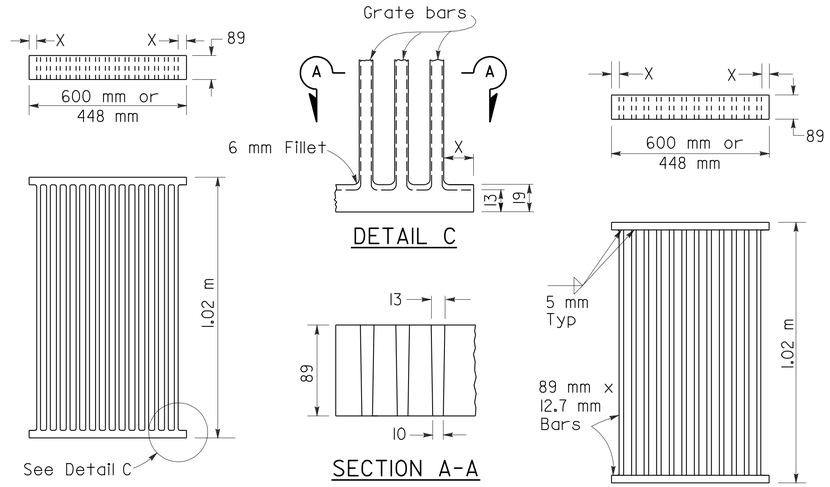

ALTERNATIVE CAST NODULAR IRON GRATE OR CAST STEEL GRATE

ALTERNATIVE WELDED GRATE

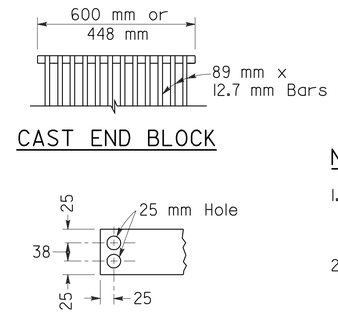

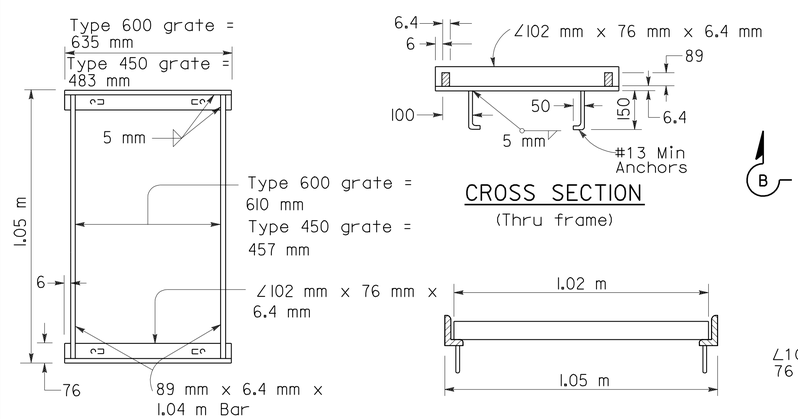

RECTANGULAR FRAME DETAILS

(For all rectangular grates)

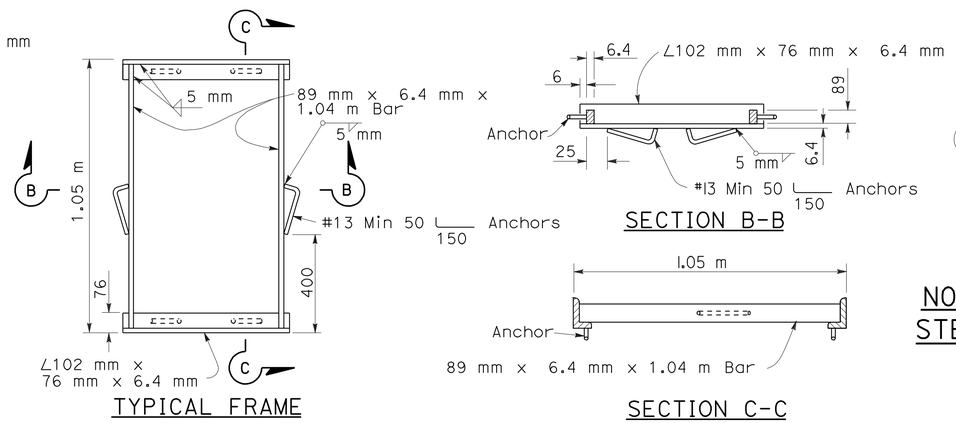

ALTERNATIVE ANCHOR FOR RECTANGULAR FRAME

(For details not shown, See Rectangular Frame Details)

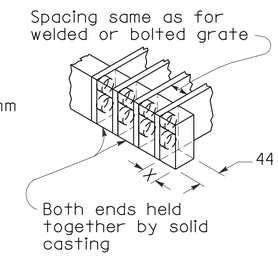

ALTERNATIVE CAST NODULAR IRON OR CAST STEEL END BLOCK GRATE

NOTES

1. Grate type numbers refer to approximate width of grate in millimeters and number of bars, respectively.
2. Contractor has the option of using cast nodular iron, cast steel, welded, bolted, or cast end block grate.
3. See Special Provisions for requirements pertaining to galvanizing or asphalt dipping of grates and frames.
4. Rounded top of bars optional on all grates.
5. Pipe inlets with a grate shall be placed so that bars parallel direction of principle surface flow.
6. Full penetration butt welds may be substituted for the fillet welds on all anchors.
7. Standard square, hexagon, round or equivalent headed anchors may be substituted for the right angle hooks on the anchors shown on this plan.
8. Grate and frame weights are based on welded grates (weights of face angles, steps, protection bars, etc. are not included).

GRATE BAR SPACING TABLE

TYPE	No. OF BARS	CLEAR BAR SPACING (mm)	X (mm)
450-9	9	35	27
600-9	9	51	40
600-12	12	35	32

INLET TYPE	COVER TYPE	MASS (kg)
OS	PLATE	79
OL-2.1	PLATE	77
OL-3.0	PLATE	77
OL-4.3	PLATE	77
OL-6.4	PLATE	77
OCP	PLATE	51
OCPI	PLATE	51
OCPI	REDWOOD	19
OMP	PLATE	80
OMPI	PLATE	80

INLET TYPE	GRATE TYPE	No. OF GRATES	MASS (kg)
GDO	600-12	2	288
GOL-2.1	600-12	1	148
GOL-3.0	600-12	1	148
GO,G1,G2,G3,G4(TYPE 600)	600-9	1	119
	600-12	1	148
G4(TYPE 450),G5,G6	450-9	1	113
GT-1	450-9	2	226
GT-2	450-9	2	226
GT-3	600-12	2	296
GT-4	600-12	2	296
TRASH RACK			10

BASIS FOR MISC IRON & STEEL FINAL PAY MASSES FOR DRAINAGE INLETS

(See General Notes, No. 8)

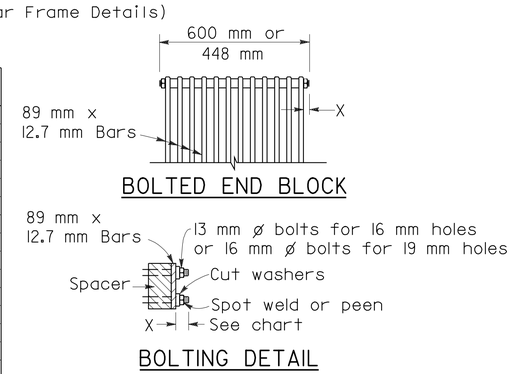

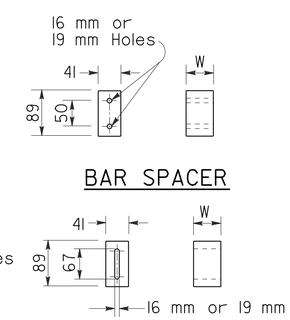

ALTERNATIVE BOLTED GRATE

STATE OF CALIFORNIA
DEPARTMENT OF TRANSPORTATION

GRATE DETAILS

NO SCALE

ALL DIMENSIONS ARE IN MILLIMETERS UNLESS OTHERWISE SHOWN

RSP D77A DATED JANUARY 18, 2008 SUPERSEDES STANDARD PLAN D77A DATED JULY 1, 2004 - PAGE 155 OF THE STANDARD PLANS BOOK DATED JULY 2004.

REVISED STANDARD PLAN RSP D77A

2004 REVISED Std PLAN RSP D77A

To accompany plans dated 1-23-12

Caltrans Metric

DIST	COUNTY	ROUTE	KILOMETER POST TOTAL PROJECT	SHEET NO.	TOTAL SHEETS
01	Men	101	R69.4/R78.9	561	939

Raymond Don Tsztoo
REGISTERED CIVIL ENGINEER

June 6, 2008
PLANS APPROVAL DATE

REGISTERED PROFESSIONAL ENGINEER Raymond Don Tsztoo No. C37332 Exp. 6-30-08 STATE OF CALIFORNIA

The State of California or its officers or agents shall not be responsible for the accuracy or completeness of electronic copies of this plan sheet.

To get to the Caltrans web site, go to: http://www.dot.ca.gov

ANNULAR AND HELICAL PROFILE

COUPLING TYPE	PIPE CORRUGATION (mm)	PIPE SIZE (mm)	W OR A (mm)	PIPE WALL THICKNESS CSP (mm)	PIPE WALL THICKNESS CAP (mm)	BAND THICKNESS CSP (mm)	BAND THICKNESS CAP (mm)	BAR AND STRAP (CSP ONLY) STRAP THICKNESS (mm)	BOLTS (mm ø)	BAR Dia (mm)	BAR YIELD STRENGTH (MPa)	ANGLE DIMENSIONS CSP (mm)	ANGLE DIMENSIONS CAP (mm)	BOLTS (No.-mm ø) CSP	BOLTS (No.-mm ø) CAP	RIVETS ANGLE TO BAND CSP	RIVETS ANGLE TO BAND CAP	SPOT WELDS ANGLE TO BAND CSP
TWO PIECE INTEGRAL FLANGE	38 x 6.5	150 - 250	178	1.32 - 2.01	1.22 - 1.52	1.32	1.52							2-10	2-10			
		300 - 450	178	1.32 - 2.01		1.63								2-13				
	68 x 13	300 - 600	178	1.32 - 2.01	1.52 - 2.67	1.63	1.52							2-13	2-13			
UNIVERSAL	68 x 13	THROUGH 900	305	1.32 - 3.51	1.52 - 3.43	1.32	1.52					51 x 51 x 4.8	51 x 51 x 4.8	3-13	3-13	3-9.5 mm	3-9.5 mm	3-15 mm
		1050 - 1500	305	1.32 - 4.27	1.91 - 4.17	1.32	1.52					51 x 51 x 4.8	51 x 51 x 4.8	3-13	3-13	3-9.5 mm	3-9.5 mm	5-15 mm
		THROUGH 1800	305	1.32 - 4.27	4.17	1.32	2.67	2.01	13	22	220	51 x 51 x 4.8	51 x 51 x 4.8	3-13	3-13	3-9.5 mm	3-9.5 mm	5-15 mm
		1950 - 2100	413	4.27		2.01		DOUBLE 2.01	13	22	220							
ANNULAR	68 x 13	THROUGH 900	178	1.63 - 3.51	1.52 - 3.43	1.32	1.52	2.01	13	22	220	51 x 51 x 4.8	51 x 51 x 4.8	2-13	2-13	3-9.5 mm	3-9.5 mm	3-15 mm
		1050 - 1800	305	1.63 - 4.27	1.91 - 4.17	1.32	2.67	2.01	13	22	220	51 x 51 x 4.8	51 x 51 x 4.8	3-13	3-13	3-9.5 mm	3-9.5 mm	5-15 mm
		1950 - 2100	305	4.27		2.01		2.77	13	22	310	51 x 51 x 4.8		3-13		3-9.5 mm		5-15 mm
	75 x 25	1200 - 2250	355	1.63 - 2.77		1.32		2.01	13	22	220	51 x 51 x 4.8		3-13		3-9.5 mm		5-15 mm
		2400 - 3000	355	2.01 - 2.77		1.32		2.77	13	22	310	51 x 51 x 4.8		3-13		4-9.5 mm		
		1050 - 2700	355		1.52 - 3.43		1.52						51 x 51 x 4.8		3-13		3-9.5 mm	
HELICAL	68 x 13	THROUGH 900	305	1.32 - 3.51	1.52 - 3.43	1.32	1.52	2.01	13	22	220	51 x 51 x 4.8	51 x 51 x 4.8	3-13	3-13	3-9.5 mm	3-9.5 mm	3-15 mm
		1050 - 1800	305	1.32 - 4.27	1.91 - 4.17	1.32	1.52	2.01	13	22	220	51 x 51 x 4.8	51 x 51 x 4.8	3-13	3-13	3-9.5 mm	3-9.5 mm	5-15 mm
		1950 - 2100	305	4.27		2.01		2.77	13	22	310	51 x 51 x 4.8		3-13		3-9.5 mm		5-15 mm
	75 x 25	1200 - 2250	355	1.63 - 2.77		1.32		2.01	13	22	220	51 x 51 x 4.8		3-13		3-9.5 mm		5-15 mm
		2400 - 3000	355	2.01 - 2.77		1.32		2.77	13	22	310	51 x 51 x 4.8		3-13		4-9.5 mm		
		1050 - 2700	355		1.52 - 3.43		1.52						51 x 51 x 4.8		3-13		3-9.5 mm	
HUGGER	68 x 13 REROLLED END	300 - 1350	100	1.32 - 2.77		1.32						64 x 38 x 4.8	64 x 38 x 4.8	1-13				3-15 mm
		1500 - 1650	100	2.77		1.63						64 x 38 x 4.8	64 x 38 x 4.8	1-13				3-15 mm
		900 - 1200	100	3.51		1.63						64 x 38 x 4.8	64 x 38 x 4.8	1-13				3-15 mm
		THROUGH 1800	267	1.32 - 4.27		1.32		2.01	13	22	220							
		1950 - 2100	267	4.27		2.01		2.77	13	22	310							
	75 x 25 REROLLED END	1200 - 2250	267	1.63 - 2.77		1.32		2.01	13	22	220							
		2400 - 3000	267	2.01 - 2.77		1.32		2.77	13	22	310							
	125 x 25 REROLLED END	1200 - 1650	190	1.63 - 2.77		1.63		2.01	13	22	220	64 x 38 x 4.8	64 x 38 x 4.8	1-13				3-15 mm
		1800 - 2250	190	1.63 - 2.01		1.63		2.01	13	22	220	64 x 38 x 4.8	64 x 38 x 4.8	1-13				3-15 mm
		1200 - 2250	190	1.63 - 3.51		1.63		2.01	13	22	220							
		1200 - 3000	305 SEE	1.63 - 2.77		1.63		2.01	13	22	220							
		1200 - 2100	305 NOTE	3.51		1.63		2.01	13	22	220							
		2250 - 3000	305 11	3.51		1.63		DOUBLE 2.01	13	22	220							

SPIRAL RIB PROFILE

COUPLING TYPE	PIPE CORRUGATION (mm)	PIPE SIZE (mm)	W (mm)	PIPE WALL THICKNESS SSRP (mm)	PIPE WALL THICKNESS ASRP (mm)	BAND THICKNESS SSRP (mm)	BAND THICKNESS ASRP (mm)	BAR AND STRAP (SSRP ONLY) STRAP THICKNESS (mm)	BOLTS (mm ø)	BAR Dia (mm)	BAR YIELD STRENGTH (MPa)	ANGLE DIMENSIONS SSRP (mm)	ANGLE DIMENSIONS ASRP (mm)	BOLTS (No.- mm ø) SSRP	BOLTS (No.- mm ø) ASRP	RIVETS ANGLE TO BAND SSRP	RIVETS ANGLE TO BAND ASRP	SPOT WELDS ANGLE TO BAND SSRP
ANNULAR	68 x 13 * REROLLED END	600 - 900	305	1.63 - 2.77	1.52 - 2.67	1.32	1.52	2.01	13	22	220	51 x 51 x 4.8	51 x 51 x 4.8	3-13	3-13	3-9.5 mm	3-9.5 mm	5-15 mm
		1050 - 1500	305	1.63 - 2.77	1.91 - 2.67	1.32	2.67	2.01	13	22	220	51 x 51 x 4.8	51 x 51 x 4.8	3-13	3-13	3-9.5 mm	3-9.5 mm	5-15 mm
		1650 - 1800	305	1.63 - 2.77		1.32		2.01	13	22	220	51 x 51 x 4.8	51 x 51 x 4.8	3-13	3-13	3-9.5 mm	3-9.5 mm	5-15 mm
		1950 - 2900	305	2.01 - 2.77		2.01		2.77	13	22	310	51 x 51 x 4.8	51 x 51 x 4.8	3-13	3-13	3-9.5 mm	3-9.5 mm	5-15 mm
HUGGER	68 x 13 * REROLLED END	600 - 1800	267	1.63 - 2.77		1.32		2.01	13	22	220							
		1950 - 2100	267	2.77		2.01		2.77	13	22	310							

* See Note 14.

14. All profiles of Spiral Rib Pipe (19 mm x 19 mm ribs at 191 mm pitch and 19 mm x 25 mm ribs at 292 mm pitch in both steel and aluminum and 19 mm x 25 mm ribs at 216 mm pitch in steel only) shall be manufactured with rerolled ends. Corrugation profile of the rerolled ends shall be 68 mm x 13 mm annual corrugations with a minimum of two full corrugations at each end.

ALL DIMENSIONS ARE IN MILLIMETERS UNLESS OTHERWISE SHOWN

NOTES

1. All ferrous metal coupling band connection hardware shall be galvanized or electro-plated in accordance with the Standard Specifications.
2. For helically corrugated coupling bands, the connection angles may be oriented parallel to the pipe axis, provided connecting holes are slotted lengthwise sufficiently to allow adjustment for the helix angle.
3. Tension strap may be connected to band with either spot welds or fillet welds that develop minimum required strength of strap.
4. Use 32 mm gage line dimension on attached angle leg for rivets and spot welds.
5. Band thickness shall not be less than:
   a. 3 standard thicknesses lighter than the thickness of the pipe for Corrugated Steel Pipe.
   b. 2 standard thicknesses lighter than the thickness of the pipe and in no case lighter than 1.5 mm for Corrugated Aluminum Pipe.
6. Dimensions, thicknesses and strengths shown are minimum.
7. For pipe arches use same width band as for round pipe of equal periphery.
8. Fillet welds of equivalent strenght may be substituted for spot welds or rivets.
9. Spot welds shall develop minimum required strength of strap.
10. Pipe with rerolled ends having at least two 68 mm x 13 mm annular corrugations at each end with or without an upturned flange may be connected with any of the annular coupling bands shown for pipe of the same diameter and wall thickness and having 68 mm x 13 mm corrugations.
11. In the case of H-305 huggerbands, two piece bands are required for diameters through 2400 mm and three piece bands are required for diameters 2550 mm through 3000 mm.
12. Two piece bands are required for pipes greater than 1050 mm diameter.
13. The 57 mm x 51 mm x 2.8 mm thick galvanized die-formed angle connector may be used in lieu of the 51 mm x 51 mm 4.8 mm angle connector for standard joints only on pipes through 1800 mm diameter.

STATE OF CALIFORNIA
DEPARTMENT OF TRANSPORTATION

CORRUGATED METAL PIPE COUPLING DETAILS No. 5 STANDARD JOINT

NO SCALE

RSP D97E DATED JUNE 6, 2008 SUPERSEDES STANDARD PLAN D97E DATED July 1, 2004 - PAGE 187 OF THE STANDARD PLANS BOOK DATED July 2004.

REVISED STANDARD PLAN RSP D97E

2004 REVISED Std PLAN RSP D97E

05-19-08

To accompany plans dated 1-23-12

DIST	COUNTY	ROUTE	KILOMETER POST TOTAL PROJECT	SHEET NO.	TOTAL SHEETS
01	Men	101	R69.4/R78.9	562	939

Caltrans Metric

Raymond Don Tsztoo
REGISTERED CIVIL ENGINEER

June 6, 2008
PLANS APPROVAL DATE

REGISTERED PROFESSIONAL ENGINEER Raymond Don Tsztoo No. C37332 Exp. 6-30-08 STATE OF CALIFORNIA

The State of California or its officers or agents shall not be responsible for the accuracy or completeness of electronic copies of this plan sheet.

To get to the Caltrans web site, go to: http://www.dot.ca.gov

ANNULAR AND HELICAL PROFILE

COUPLING TYPE	PIPE CORRUGATION (mm)	PIPE SIZE (mm)	W OR A (mm)	PIPE WALL THICKNESS CSP (mm)	PIPE WALL THICKNESS CAP (mm)	BAND THICKNESS CSP (mm)	BAND THICKNESS CAP (mm)	BAR AND STRAP (CSP ONLY) STRAP THICKNESS (mm)	BAR AND STRAP (CSP ONLY) BOLTS (mm ø)	BAR AND STRAP (CSP ONLY) BAR Dia (mm)	BAR AND STRAP (CSP ONLY) BAR YIELD STRENGTH (MPa)	ANGLE DIMENSIONS CSP (mm)	ANGLE DIMENSIONS CAP (mm)	ANGLE BOLTS (No. - mm ø) CSP	ANGLE BOLTS (No. - mm ø) CAP	ANGLE RIVETS ANGLE TO BAND CSP	ANGLE RIVETS ANGLE TO BAND CAP	ANGLE SPOT WELDS ANGLE TO BAND CSP
TWO PIECE INTEGRAL FLANGE	38 x 6.5	150-250	178	1.63-2.01	1.52	1.63	1.52							2-10	2-10			
	68 x 13	300-600	305		1.52-2.67		1.52								3-13			
UNIVERSAL	68 x 13	THROUGH 900	305	1.63-3.51	1.52-3.43	1.63	1.52	2.01	13	22	220	51 x 51 x 4.8	51 x 51 x 4.8	3-13	3-13	3-9.5 mm	3-9.5 mm	5-15 mm
		1050-1500	413	1.63-4.27	1.52-4.17	1.63	1.52	DOUBLE 2.01	13	22	220	51 x 51 x 6.4	51 x 51 x 6.4	4-13	4-13	5-9.5 mm	5-9.5 mm	
ANNULAR	68 x 13	THROUGH 900	305	1.63-3.51	1.52-3.43	1.63	1.52					51 x 51 x 4.8	51 x 51 x 4.8	3-13	3-13	3-9.5 mm	3-9.5 mm	5-15 mm
		1050-1500	305	1.63-2.01		1.63						51 x 51 x 4.8		3-13		3-9.5 mm		5-15 mm
		1050-1500	305	2.77-4.27	3.43-4.17	1.63	1.91					51 x 51 x 6.4	51 x 51 x 6.4	3-13	3-13	5-9.5 mm	5-9.5 mm	
		1650-1800	610		4.17		2.67						51 x 51 x 6.4		5-13		5-13 mm	
		1650-2100	610	2.77-4.27		1.63						51 x 51 x 6.4		5-13		7-9.5 mm		
		1050-1350	305		1.52-2.67		1.52						51 x 51 x 4.8		3-13		3-9.5 mm	
	75 x 25	1200-1500	355	1.63-2.01		1.63						51 x 51 x 4.8		3-13		3-9.5 mm		5-15 mm
		1200-1500	355	2.77		1.63						51 x 51 x 4.8		3-13		5-9.5 mm		
		1650-3000	635	1.63-2.77		1.63						51 x 51 x 4.8		5-13		9-9.5 mm		
		1050-1500	355		1.52-2.67		1.52						51 x 51 x 4.8		3-13		5-9.5 mm	
		1050-1500	355		3.43		1.91						51 x 51 x 6.4		3-13		5-9.5 mm	
		1650-2400	635		1.52-3.43		1.52						51 x 51 x 6.4		5-13		7-9.5 mm	
		2400-2700	635		3.43		1.91						51 x 51 x 6.4		5-13		7-9.5 mm	
HELICAL	68 x 13	THROUGH 900	305	1.63-3.51	1.52-3.43	1.63	1.52					51 x 51 x 4.8	51 x 51 x 4.8	3-13	3-13	3-9.5 mm	3-9.5 mm	5-15 mm
		1050-1350	305		1.52-2.67		1.52						51 x 51 x 4.8		3-13		3-9.5 mm	
		1050-1500	305	1.63-2.01		1.63						51 x 51 x 4.8		3-13		3-9.5 mm		5-15 mm
		1050-1500	305	2.77-4.27	3.43-4.17	1.63	1.91					51 x 51 x 6.4	51 x 51 x 6.4	3-13	3-13	5-9.5 mm	5-9.5 mm	
		1650-2100	610	2.77-4.27		1.63						51 x 51 x 6.4		5-13		7-9.5 mm		
		1650-1800	610		4.17		2.67						51 x 51 x 6.4		5-13		5-9.5 mm	
	75 x 25	1200-1500	355	1.63-2.01		1.63						51 x 51 x 4.8		3-13		3-9.5 mm		5-15 mm
		1200-1500	355	2.77		1.63						51 x 51 x 4.8		3-13		5-9.5 mm		
		1650-3000	635	1.63-2.77		1.63						51 x 51 x 4.8		5-13		9-9.5 mm		
		1050-1500	355		1.52-2.67		1.52						51 x 51 x 4.8		3-13		5-9.5 mm	
		1050-1500	355		3.43		1.91						51 x 51 x 6.4		3-13		5-9.5 mm	
		1650-2400	635		1.52-3.43		1.52						51 x 51 x 6.4		5-13		7-9.5 mm	
		2400-2700	635		3.43		1.91						51 x 51 x 6.4		5-13		7-9.5 mm	
HUGGER	68 x 13 REROLLED END	THROUGH 1200	267	2.77		1.63		2.01	13	22	220							
		1350 - 1650	267	2.77		1.63		DOUBLE 2.01	13	22	220							
		THROUGH 1350	267	1.63 - 2.01		1.63		2.01	13	22	220							
		THROUGH 1500	267	3.51		2.01		DOUBLE 2.01	13	22	220							
		1650 - 1800	267	3.51		2.77		DOUBLE 2.01	13	22	220							
		THROUGH 1800	267	4.27		2.77		DOUBLE 2.77	13	22	310							
	75 x 25 REROLLED END	1200 - 2100	267	2.77		2.01		DOUBLE 2.01	13	22	220							
		1200 - 2250	267	1.63 - 2.01		1.63		DOUBLE 2.01	13	22	220							
		2400 - 2550	267	2.01		2.01		DOUBLE 2.01	13	22	220							
		2250 - 3000	267	2.77		2.77		DOUBLE 2.77	13	22	310							

SPIRAL RIB PROFILE

COUPLING TYPE	PIPE CORRUGATION (mm)	PIPE SIZE (mm)	W (mm)	PIPE WALL THICKNESS SSRP (mm)	PIPE WALL THICKNESS ASRP (mm)	BAND THICKNESS SSRP (mm)	BAND THICKNESS ASRP (mm)	BAR AND STRAP (SSRP ONLY) STRAP THICKNESS (mm)	BAR AND STRAP (SSRP ONLY) BOLTS (mm ø)	BAR AND STRAP (SSRP ONLY) BAR Dia (mm)	BAR AND STRAP (SSRP ONLY) BAR YIELD STRENGTH (MPa)	ANGLE DIMENSIONS SSRP (mm)	ANGLE DIMENSIONS ASRP (mm)	ANGLE BOLTS (No.- mm ø) SSRP	ANGLE BOLTS (No.- mm ø) ASRP	ANGLE RIVETS ANGLE TO BAND SSRP	ANGLE RIVETS ANGLE TO BAND ASRP	ANGLE SPOT WELDS ANGLE TO BAND SSRP
ANNULAR	68 x 13 * REROLLED END	600 - 900	305	1.63 - 2.77	1.52 - 2.67	1.63	1.52	2.01	13	22	220	51 x 51 x 4.8	51 x 51 x 4.8	3-13	3-13	3-9.5 mm	3-9.5 mm	5-15 mm
		1050 - 1500	305	1.63 - 2.01	1.90 - 2.67	1.63	1.90	2.01	13	22	220	51 x 51 x 4.8	51 x 51 x 4.8	3-13	3-13	3-9.5 mm	3-9.5 mm	5-15 mm
		1050 - 1500	305	2.77		1.63		2.01	13	22	220	51 x 51 x 6.4		3-13		5-9.5 mm		
		1650 - 2100	610	2.77		1.63		2.01	13	22	220	51 x 51 x 6.4		5-13		7-9.5 mm		
HUGGER	68 x 13 * REROLLED END	600 - 1350	267	1.63 - 2.01		1.63		2.01	13	22	220							
		600 - 1200	267	2.77		1.63		2.01	13	22	220							
		1350 - 1650	267	2.77		1.63		Double 2.01	13	22	220							

* See Note 13.

13. All profiles of Spiral Rib Pipe (19 mm x 19 mm ribs at 191 mm pitch and 19 mm x 25 mm ribs at 292 mm pitch in both steel and aluminum and 19 mm x 25 mm ribs at 216 mm pitch in steel only) shall be manufactured with rerolled ends. Corrugation profile of the rerolled ends shall be 68 mm x 13 mm annual corrugations with a minimum of two full corrugations at each end.

ALL DIMENSIONS ARE IN MILLIMETERS UNLESS OTHERWISE SHOWN

NOTES

1. All ferrous metal coupling band connection hardware shall be galvanized or electro-plated in accordance with the Standard Specifications.
2. For helically corrugated coupling bands, the connection angles may be oriented parallel to the pipe axis, provided connecting holes are slotted lengthwise sufficiently to allow adjustment for the helix angle.
3. Tension strap may be connected to band with either spot welds or fillet welds that develop minimum required strength of strap.
4. Use 32 mm gage line dimension on attached angle leg for rivets and spot welds.
5. Band thickness shall not be less than:
   a. 3 standard thicknesses lighter than the thickness of the pipe for corrugated steel pipe.
   b. 2 standard thicknesses lighter than the thickness of the pipe and in no case lighter than 1.5 mm for corrugated aluminum pipe.
6. Dimensions, thicknesses and strengths shown are minimum.
7. For pipe arches use same width band as for round pipe of equal periphery.
8. Fillet welds of equivalent strength may be substituted for spot welds or rivets.
9. Spot welds shall develop minimum required strength of strap.
10. Pipe with rerolled ends having at least two 68 mm x 13 mm annular corrugations at each end with or without an upturned flange may be connected with any of the annular coupling bands shown for pipe of the same diameter and wall thickness and having 68 mm x 13 mm corrugations.
11. In the case of H-305 huggerbands, two piece bands are required for diameters through 2400 mm and three piece bands are required for diameters 2550 mm through 3000 mm.
12. Two piece bands are required for pipes greater than 1050 mm diameter.

STATE OF CALIFORNIA
DEPARTMENT OF TRANSPORTATION

CORRUGATED METAL PIPE COUPLING DETAILS No. 6 POSITIVE JOINT

NO SCALE

RSP D97F DATED JUNE 6, 2008 SUPERSEDES STANDARD PLAN D97F
DATED July 1, 2004 - PAGE 188 OF THE STANDARD PLANS BOOK DATED July 2004.

REVISED STANDARD PLAN RSP D97F

2004 REVISED Std PLAN RSP D97F

05-19-08

To accompany plans dated 1-23-12

Caltrans Metric

DIST	COUNTY	ROUTE	KILOMETER POST TOTAL PROJECT	SHEET NO.	TOTAL SHEETS
01	Men	101	R69.4/R78.9	563	939

Raymond Don Tsztoo
REGISTERED CIVIL ENGINEER

June 6, 2008
PLANS APPROVAL DATE

REGISTERED PROFESSIONAL ENGINEER Raymond Don Tsztoo No. C37332 Exp. 6-30-08 STATE OF CALIFORNIA

The State of California or its officers or agents shall not be responsible for the accuracy or completeness of electronic copies of this plan sheet.

To get to the Caltrans web site, go to: http://www.dot.ca.gov

ANNULAR AND HELICAL PROFILE

COUPLING TYPE	PIPE CORRUGATION (mm)	PIPE SIZE (mm)	W OR A (mm)	PIPE WALL THICKNESS		BAND THICKNESS		BAR AND STRAP (CSP ONLY)			ANGLE						
											DIMENSIONS		BOLTS (No.-mm ø)		RIVETS ANGLE TO BAND		SPOT WELDS ANGLE TO BAND
				CSP (mm)	CAP (mm)	CSP (mm)	CAP (mm)	STRAP THICKNESS (mm)	BOLTS (mm ø)	BAR Dia (mm)	CSP (mm)	CAP (mm)	CSP	CAP	CSP	CAP	CSP
TWO PIECE INTEGRAL FLANGE	38 x 6.5	150	178	1.63 - 4.27		1.32							3-10				
	38 x 6.5	200 - 250	178	1.63 - 4.27	1.52 - 4.17	1.63	1.52						3-10	3-10			
ANNULAR	68 x 13	THROUGH 600	305	1.63 - 4.27	1.52 - 4.17	1.63	1.52				51 x 51 x 4.8	51 x 51 x 4.8	3-13	3-13	3-9.5 mm	3-9.5 mm	3-15 mm
HUGGER	68 x 13 REROLLED END	THROUGH 600	267	1.63 - 4.27		1.63		2.01	13	22	51 x 51 x 4.8	51 x 51 x 4.8	3-13	3-13	3-9.5 mm	3-9.5 mm	3-15 mm

SPIRAL RIB PROFILE

COUPLING TYPE	PIPE CORRUGATION (mm)	PIPE SIZE (mm)	W (mm)	PIPE WALL THICKNESS		BAND THICKNESS		BAR AND STRAP (SSRP ONLY)			ANGLE						
											DIMENSIONS		BOLTS (No.- mm ø)		RIVETS ANGLE TO BAND		SPOT WELDS ANGLE TO BAND
				SSRP (mm)	ASRP (mm)	SSRP (mm)	ASRP (mm)	STRAP THICKNESS (mm)	BOLTS (mm ø)	BAR Dia (mm)	SSRP (mm)	ASRP (mm)	SSRP	ASRP	SSRP	ASRP	SSRP
ANNULAR	68 x 13 * REROLLED END	600	305	1.63 - 4.27	1.52 - 4.17	1.63	1.52				51 x 51 x 4.8	51 x 51 x 4.8	3-13	3-13	3-9.5 mm	3-9.5 mm	3-15 mm
HUGGER	68 x 13 * REROLLED END	600	267	1.63 - 4.27		1.63		2.01	13	22							

* See Note 12.

NOTES

1. All ferrous metal coupling band connection hardware shall be galvanized or electroplated in accordance with the Standard Specifications.
2. For helically corrugated coupling bands, the connection angles may be oriented parallel to the pipe axis, provided connecting holes are slotted lengthwise sufficiently to allow adjustment for the helix angle.
3. Tension straps may be connected to band with either spot welds or fillet welds that develop minimum required strength of strap.
4. Use 32 mm gage line dimension on attached angle leg for rivets and spot welds.
5. Band thickness shall not be less than:
   a. 3 standard thickness lighter than the thickness of the pipe for corrugated steel pipe.
   b. 2 standard thickness lighter than the thickness of the pipe and in no case lighter than 1.5 mm for corrugated aluminum pipe.
6. Dimensions, thickness and strengths shown are minimum.
7. For pipe arches use same width band as for round pipe of equal periphery.
8. Fillet welds of equivalent strength may be substituted for spot welds or rivets.
9. Spot welds shall develop minimum required strength of strap.
10. Pipe with rerolled ends having at least two 68 mm x 13 mm annular corrugations at each end with or without an upturned flange may be connected with any of the annular coupling bands shown for pipe of the same diameter and wall thickness and having 68 mm x 13 mm corrugations.
11. For downdrain applications, two piece integral flange couplers shall have factory applied sleeve type rubber gaskets with a minimum length of 175 mm measured along the length of the pipe.
12. All profiles of Spiral Rib Pipe (19 mm x 19 mm ribs at 191 mm pitch and 19 mm x 25 mm ribs at 292 mm pitch in both steel and aluminum and 19 mm x 25 mm ribs at 216 mm pitch in steel only) shall be manufactured with rerolled ends. Corrugation profile of the rerolled ends shall be 68 mm x 13 mm annual corrugations with a minimum of two full corrugations at each end.

STATE OF CALIFORNIA
DEPARTMENT OF TRANSPORTATION

CORRUGATED METAL PIPE COUPLING DETAILS No. 7 DOWNDRAIN

NO SCALE

ALL DIMENSIONS ARE IN MILLIMETERS UNLESS OTHERWISE SHOWN

RSP D97G DATED JUNE 6, 2008 SUPERSEDES STANDARD PLAN D97G DATED July 1, 2004 - PAGE 189 OF THE STANDARD PLANS BOOK DATED July 2004.

REVISED STANDARD PLAN RSP D97G

2004 REVISED Std PLAN RSP D97G

DIST	COUNTY	ROUTE	KILOMETER POST TOTAL PROJECT	SHEET NO.	TOTAL SHEETS
01	Men	101	R69.4/R78.9	564	939

Caltrans Metric

LICENSED LANDSCAPE ARCHITECT

March 7, 2008
PLANS APPROVAL DATE

LICENSED LANDSCAPE ARCHITECT Gregory A. Balzer 2216 Signature 02-28-2009 Renewal Date 02-21-08 Date STATE OF CALIFORNIA

The State of California or its officers or agents shall not be responsible for the accuracy or completeness of electronic copies of this plan sheet.

To get to the Caltrans web site, go to: http://www.dot.ca.gov

To accompany plans dated 1-23-12

2004 REVISED Std PLAN RSP H2

EXISTING	PROPOSED	ITEM DESCRIPTION
		WATER METER (WM)
		BACKFLOW PREVENTER ASSEMBLY (BPA)
		BACKFLOW PREVENTER ASSEMBLY IN ENCLOSURE (BPAE)
		BACKFLOW PREVENTER ENCLOSURE (BPE)
		BOOSTER PUMP (BP)
		TRUCK LOADING STANDPIPE (TLS)
fs	FS	FLOW SENSOR (FS)
		MASTER IRRIGATION CONTROLLER (MIC)
		AUXILIARY IRRIGATION CONTROLLER (AIC)
		IRRIGATION CONTROLLER (IC)/ IRRIGATION CONTROLLER (IC) (BATTERY)
		IRRIGATION CONTROLLER(S) IN CONTROLLER ENCLOSURE CABINET (ICC)
		CONTROL AND NEUTRAL CONDUCTORS (CNC)
scc	SCC	SPRINKLER CONTROL CONDUIT (SCC)
		CONDUIT (COND)
		IRRIGATION SLEEVE
dip	DIP	DUCTILE IRON PIPE (SUPPLY LINE) (MAIN) (DIP)
		GALVANIZED STEEL PIPE (SUPPLY LINE) (MAIN) (GSP)
		GALVANIZED STEEL PIPE (SUPPLY LINE) (LATERAL) (GSP)
		PLASTIC PIPE (PR 200) (SUPPLY LINE) (MAIN)
		PLASTIC PIPE (PR 200) (SUPPLY LINE) (LATERAL)
		PLASTIC PIPE (IRRIGATION LINE)
		REMOTE CONTROL VALVE (RCV) REMOTE CONTROL VALVE (MASTER) (RCVM)
		MANUAL CONTROL VALVE (MCV)
		VALVE ASSEMBLY UNIT (VAU)
		WYE STRAINER (WS)
		FILTER ASSEMBLY UNIT (FAU)
		GATE VALVE (GV)
		BALL VALVE (BV)

EXISTING	PROPOSED	ITEM DESCRIPTION
		QUICK COUPLING VALVE (QCV)
		CAM COUPLING ASSEMBLY (CCA)
		PRESSURE REDUCING VALVE (PRV)
		PRESSURE RELIEF VALVE (PRLV)
		FLOW CONTROL VALVE (FCV)
		COMBINATION AIR RELEASE VALVE (CARV)
		CHECK VALVE (CV)
		FLUSH VALVE (FV)
		NOZZLE LINE W/TURNING UNION
		IRRIGATION SYSTEM
		IRRIGATION SYSTEM TO BE REMOVED
		CHAIN LINK GATE
		QUICK COUPLING VALVE W/SPRINKLER PROTECTOR
3	3	SPRINKLER W/SPRINKLER PROTECTOR
	C	CONNECT TO EXISTING SYSTEM
		CAP
		CAP EXISTING

VALVE CODE

RCV SIZE (mm)
IRRIGATION CONTROLLER
CONTROLLER STATION
VALVE IN PARALLEL (IF APPLICABLE)
L/min
QUANTITY OF SPRINKLERS (WHEN SHOWN)

* 63.5-A-2b-151.4-60

MCV SIZE (mm)
VALVE NUMBER
L/min
QUANTITY OF TYPE SPRINKLERS (WHEN SHOWN)

* 50.8-3-113.5-50

* VALVE CODES FOR EXISTING VALVES ARE SHOWN IN A DASHED ENCLOSURE.

STATE OF CALIFORNIA
DEPARTMENT OF TRANSPORTATION

PLANTING AND IRRIGATION SYMBOLS

NO SCALE

ALL DIMENSIONS ARE IN MILLIMETERS UNLESS OTHERWISE SHOWN

RSP H2 DATED MARCH 7, 2008 SUPERSEDES STANDARD PLAN H2 DATED JULY 1, 2004 - PAGE 202 OF THE STANDARD PLANS BOOK DATED JULY 2004.

REVISED STANDARD PLAN RSP H2

2-20-08

DIST	COUNTY	ROUTE	KILOMETER POST TOTAL PROJECT	SHEET NO.	TOTAL SHEETS
01	Men	101	R69.4/R78.9	565	939

Caltrans Metric

Randell D. Hiatt
REGISTERED CIVIL ENGINEER

June 6, 2008
PLANS APPROVAL DATE

REGISTERED PROFESSIONAL ENGINEER
Randell D. Hiatt
No. C50200
Exp. 6-30-09
CIVIL
STATE OF CALIFORNIA

The State of California or its officers or agents shall not be responsible for the accuracy or completeness of electronic copies of this plan sheet.

To get to the Caltrans web site, go to: http://www.dot.ca.gov

To accompany plans dated 1-23-12

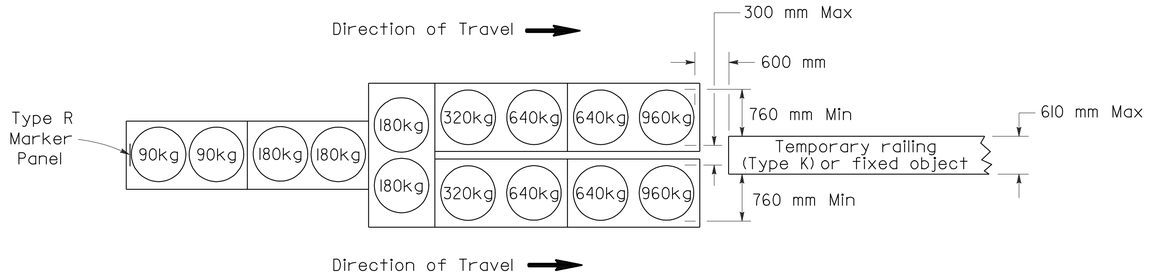

ARRAY 'TU14'

Approach speed 70 km/h or more

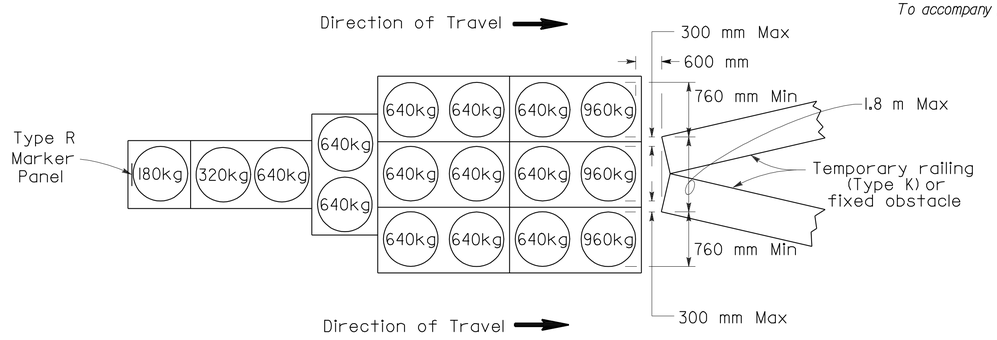

ARRAY 'TU17'

Approach speed less than 70 km/h

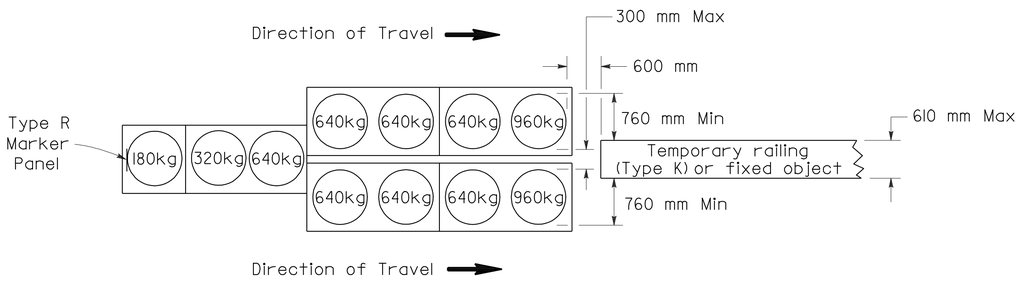

ARRAY 'TU11'

Approach speed less than 70 km/h

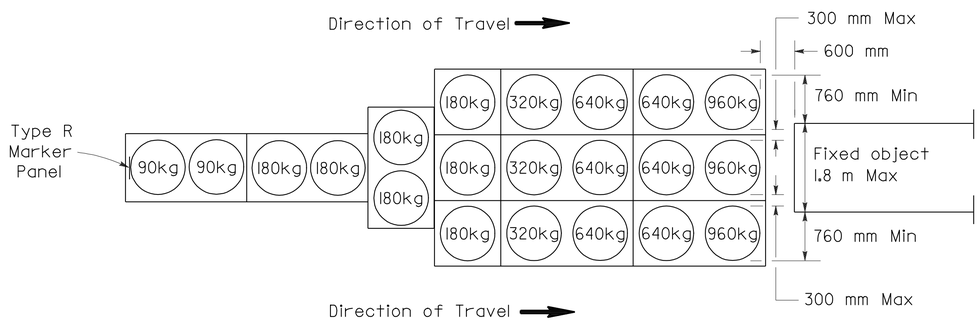

ARRAY 'TU21'

Approach speed 70 km/h or more

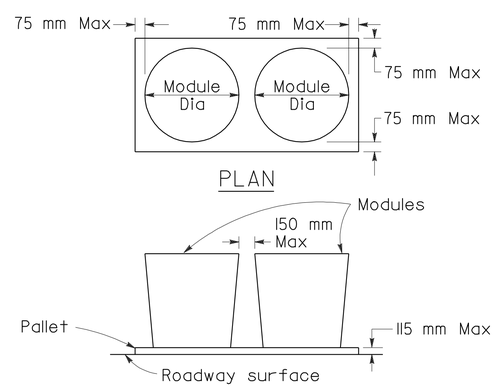

CRASH CUSHION PALLET DETAIL

See Note 7

NOTES

1. (XXX) Indicates sand filled module location and mass of sand in kilograms for each module. Module spacing is based on the greater diameter of the module.
2. All sand masses are nominal.
3. Temporary crash cushion arrays shall not encroach on the traveled way.
4. Place the top of Type R marker panel 25 mm below the module lid.
5. Refer to Standard Plan A73B for marker details.
6. Approach speeds indicated conform to NCHRP 350 Report criteria.
7. Use of Pallets is optional.

STATE OF CALIFORNIA
DEPARTMENT OF TRANSPORTATION

TEMPORARY CRASH CUSHION, SAND FILLED (UNIDIRECTIONAL)

NO SCALE

ALL DIMENSIONS ARE IN MILLIMETERS UNLESS OTHERWISE SHOWN

RSP T1A DATED JUNE 6, 2008 SUPERSEDES STANDARD PLAN T1A
DATED July 1, 2004 - PAGE 211 OF THE STANDARD PLANS BOOK DATED July 2004.

REVISED STANDARD PLAN RSP T1A

2004 REVISED Std PLAN RSP T1A

5-16-08

DIST	COUNTY	ROUTE	KILOMETER POST TOTAL PROJECT	SHEET NO.	TOTAL SHEETS
01	Men	101	R69.4/R78.9	566	939

Caltrans Metric

Randell D. Hiatt
REGISTERED CIVIL ENGINEER

June 6, 2008
PLANS APPROVAL DATE

REGISTERED PROFESSIONAL ENGINEER
Randell D. Hiatt
No. C50200
Exp. 6-30-09
CIVIL
STATE OF CALIFORNIA

The State of California or its officers or agents shall not be responsible for the accuracy or completeness of electronic copies of this plan sheet.

To get to the Caltrans web site, go to: http://www.dot.ca.gov

To accompany plans dated 1-23-12

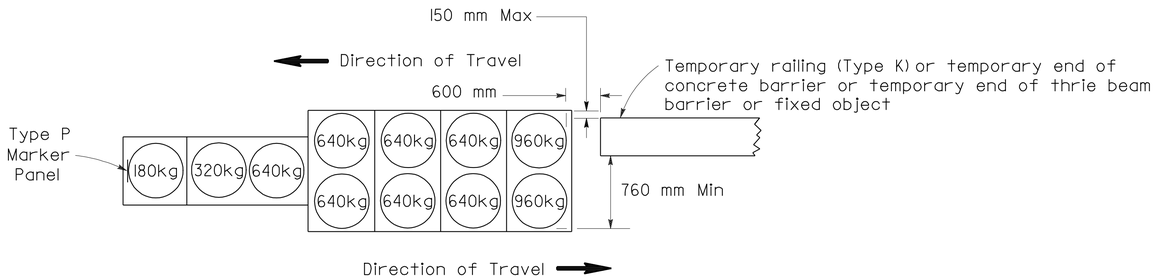

ARRAY 'TBI1'

Approach speed less than 70 km/h

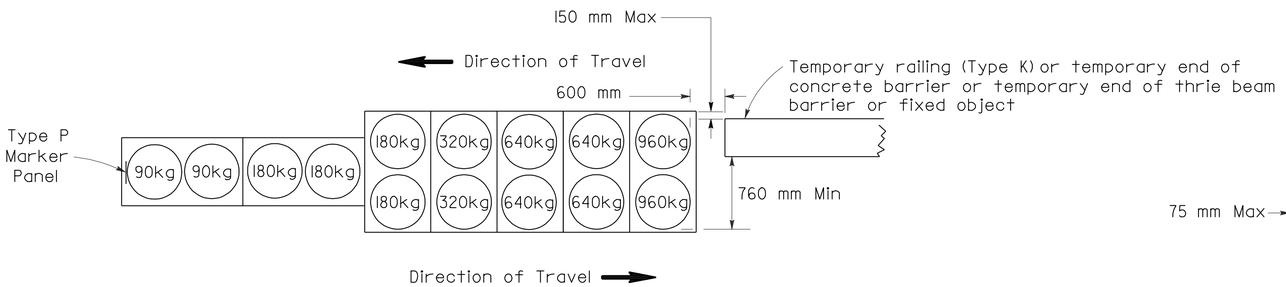

ARRAY 'TBI4'

Approach speed 70 km/h or more

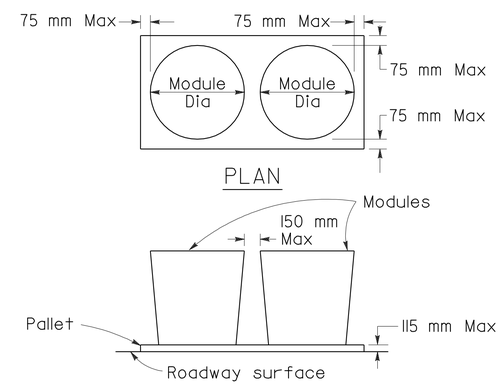

CRASH CUSHION PALLET DETAIL

See Note 7

NOTES

1. (XXX) Indicates sand filled module location and mass of sand in kilograms for each module. Module spacing is based on the greater diameter of the module.
2. All sand masses are nominal.
3. Temporary crash cushion arrays shall not encroach on the traveled way.
4. Place the Type P marker panel so that the bottom of the panel rests upon the pallet.
5. Refer to Standard Plan A73B for marker details.
6. Approach speeds indicated conform to NCHRP 350 Report criteria.
7. Use of Pallets is optional.

STATE OF CALIFORNIA
DEPARTMENT OF TRANSPORTATION

TEMPORARY CRASH CUSHION, SAND FILLED (BIDIRECTIONAL)

NO SCALE

ALL DIMENSIONS ARE IN MILLIMETERS UNLESS OTHERWISE SHOWN

RSP T1B DATED JUNE 6, 2008 SUPERSEDES STANDARD PLAN T1B DATED July 1, 2004 - PAGE 212 OF THE STANDARD PLANS BOOK DATED July 2004.

REVISED STANDARD PLAN RSP T1B

2004 REVISED Std PLAN RSP T1B

5-16-08

DIST	COUNTY	ROUTE	KILOMETER POST TOTAL PROJECT	SHEET NO.	TOTAL SHEETS
01	Men	101	R69.4/R78.9	567	939

Randell D. Hiatt
REGISTERED CIVIL ENGINEER

June 6, 2008
PLANS APPROVAL DATE

REGISTERED PROFESSIONAL ENGINEER
Randell D. Hiatt
No. C50200
Exp. 6-30-09
CIVIL
STATE OF CALIFORNIA

The State of California or its officers or agents shall not be responsible for the accuracy or completeness of electronic copies of this plan sheet.

To get to the Caltrans web site, go to: http://www.dot.ca.gov

To accompany plans dated 1-23-12

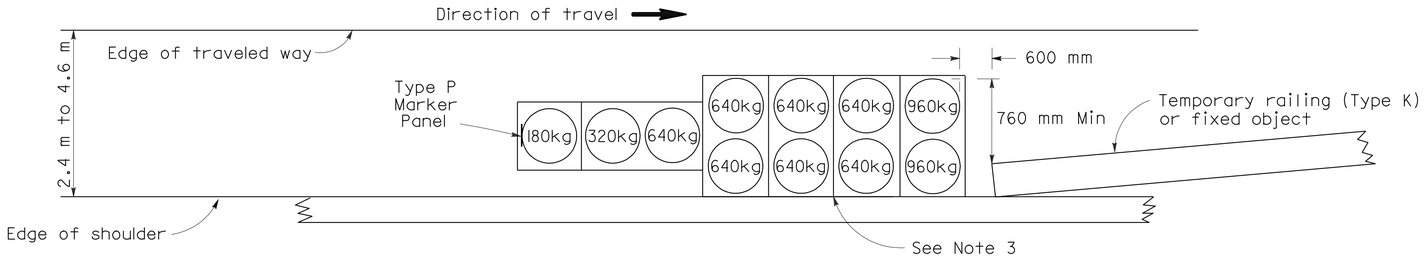

ARRAY 'TSI1'

Approach speed less than 70 km/h
See Note 9

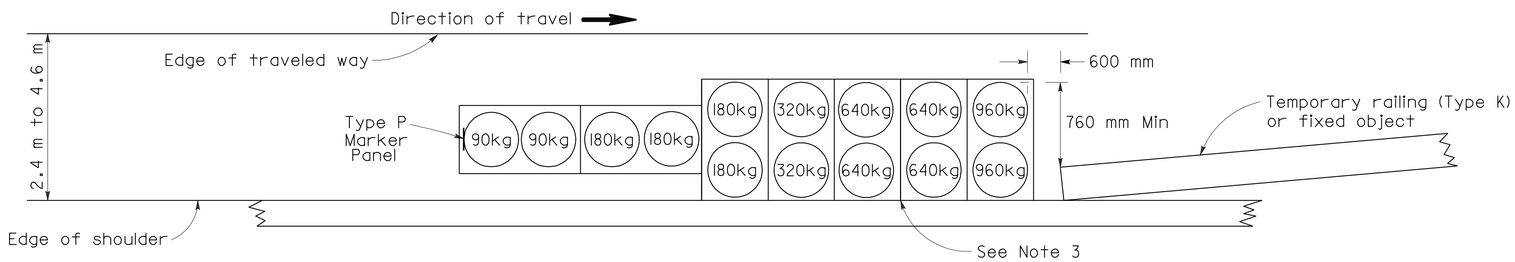

ARRAY 'TSI4'

Approach speed 70 km/h or more
See Note 9

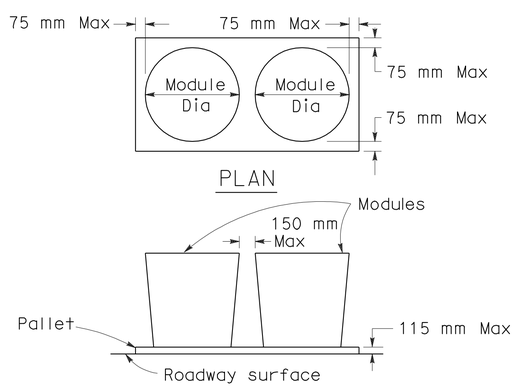

CRASH CUSHION PALLET DETAIL

See Note 11

NOTES

1. (XXX) Indicates sand filled module location and mass of sand in kilograms for each module. Module spacing is based on the greater diameter of the module.
2. All sand masses are nominal.
3. The temporary crash cushion arrays shown on this plan shall be used only in locations where there will be traffic on one side of the temporary crash cushion array.
4. If the fixed object or approach end of the temporary railing is less than 4.60 meters from the edge of traveled way, a temporary crash cushion is required.
5. Temporary crash cushion arrays shall not encroach on the traveled way.
6. Arrays for median shoulders shall conform to details shown on this plan for outside shoulders.
7. Place the Type P marker panel so that the bottom of the panel rest upon the pallet and faces traffic.
8. Refer to Standard Plan A73B for marker details.
9. For shoulder widths less than 2.4 m, appropriate approved crash cushion protection, other than sand filled modules, shall be provided at fixed objects and at approach ends of temporary railing. The specific type of crash cushion shall be as shown on the project plans or as specified in the Special Provisions, or if not shown on the project plans or specified in the Special Provisions, shall be as approved by the Engineer.
10. Approach speeds indicated conform to NCHRP 350 Report criteria.
11. Use of Pallets is optional.

STATE OF CALIFORNIA
DEPARTMENT OF TRANSPORTATION

TEMPORARY CRASH CUSHION, SAND FILLED (SHOULDER INSTALLATIONS)

NO SCALE

ALL DIMENSIONS ARE IN MILLIMETERS UNLESS OTHERWISE SHOWN

RSP T2 DATED JUNE 6, 2008 SUPERSEDES STANDARD PLAN T2
DATED July 1, 2004 - PAGE 213 OF THE STANDARD PLANS BOOK DATED July 2004.

REVISED STANDARD PLAN RSP T2

2004 REVISED Std PLAN RSP T2

5-16-08

To accompany plans dated 1-23-12

Caltrans Metric

DIST	COUNTY	ROUTE	KILOMETER POST TOTAL PROJECT	SHEET NO.	TOTAL SHEETS
01	Men	101	R69.4/R78.9	568	939

REGISTERED CIVIL ENGINEER

November 17, 2006
PLANS APPROVAL DATE

REGISTERED PROFESSIONAL ENGINEER — Greg W. Edwards — No. C36386 — Exp. 6-30-08 — CIVIL — STATE OF CALIFORNIA

The State of California or its officers or agents shall not be responsible for the accuracy or completeness of electronic copies of this plan sheet.

To get to the Caltrans web site, go to: http://www.dot.ca.gov

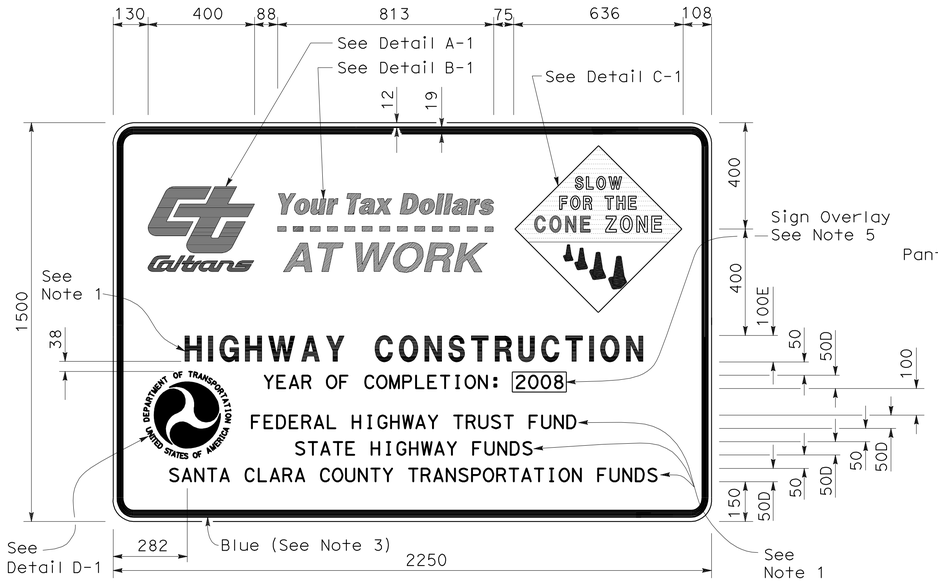

TYPE 1

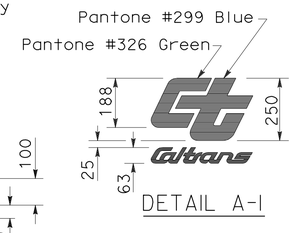

DETAIL A-1

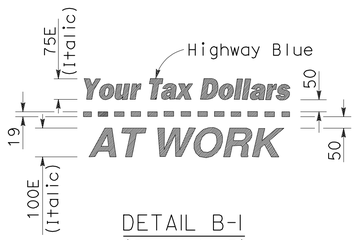

DETAIL B-1
(See Note 3)

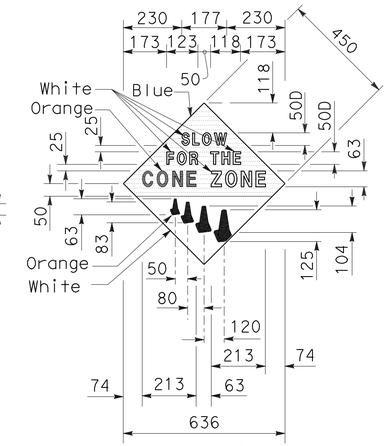

DETAIL C-1
(See Note 4)

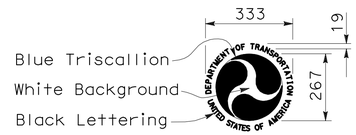

DETAIL D-1
(See Note 6)

NOTES:

1. The sign messages shown for type of project and fund types are examples only. See the Special Provisions for the applicable type of project and fund type messages to be used.
2. Except as otherwise shown, the legend of sign shall be black on a white background (non-reflective).
3. The border of the signs and details "B-1" and "B-2" shall be blue (non-reflective).
4. The diamond in details "C-1" and "C-2" shall be blue for the background of message, " SLOW FOR THE CONE ZONE", and white background for the orange cones. The color and type of font for the "SLOW FOR THE CONE ZONE" message shall be: "SLOW" white D; "FOR THE" white D; "CONE" orange Arial font; "ZONE" white Arial font.
5. Year of completion of project construction shown on the overlay is an example only. See the Special Provisions.
6. Use when the Project involves Federal Highway Trust Fund.

TYPE 2

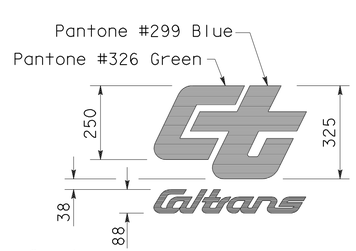

DETAIL A-2

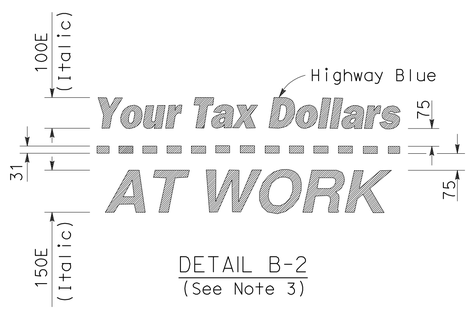

DETAIL B-2
(See Note 3)

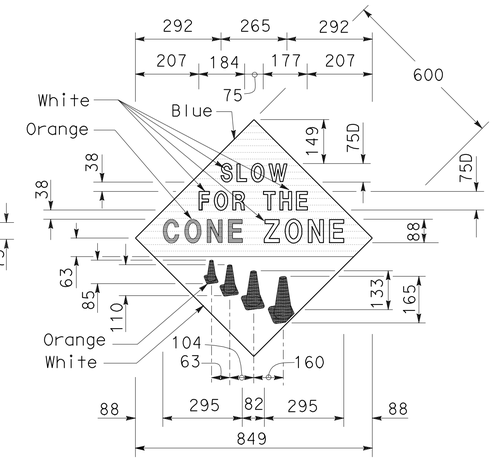

DETAIL C-2
(See Note 4)

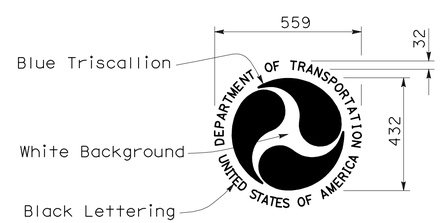

DETAIL D-2
(See Note 6)

STATE OF CALIFORNIA
DEPARTMENT OF TRANSPORTATION

CONSTRUCTION PROJECT FUNDING IDENTIFICATION SIGNS

NO SCALE

ALL DIMENSIONS ARE IN MILLIMETERS UNLESS OTHERWISE SHOWN

RSP T7 DATED NOVEMBER 17, 2006 SUPERSEDES RSP T7 DATED APRIL 28, 2005 AND STANDARD PLAN T7 DATED JULY 1, 2004-PAGE 217 OF THE STANDARD PLANS BOOK DATED JULY 2004.

REVISED STANDARD PLAN RSP T7

2004 REVISED Std PLAN RSP T7

9-7-06

DIST	COUNTY	ROUTE	KILOMETER POST TOTAL PROJECT	SHEET NO.	TOTAL SHEETS
01	Men	101	R69.4/R78.9	569	939

To accompany plans dated 1-23-12

Caltrans Metric

Greg W. Edwards
REGISTERED CIVIL ENGINEER

April 28, 2005
PLANS APPROVAL DATE

REGISTERED PROFESSIONAL ENGINEER Greg W. Edwards No. C36386 Exp. 6-30-06 CIVIL STATE OF CALIFORNIA

The State of California or its officers or agents shall not be responsible for the accuracy or completeness of electronic copies of this plan sheet.

To get to the Caltrans web site, go to: http://www.dot.ca.gov

NOTES

Unless otherwise specified in the special provisions, all temporary warning signs shall have black legend on orange background.

California code are designated by (CA). Otherwise, Federal codes are shown.

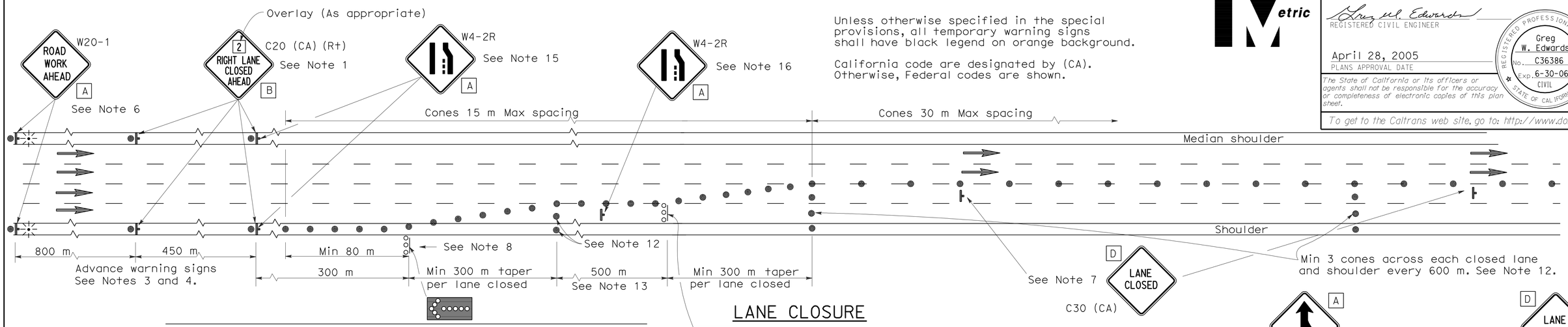

LANE CLOSURE

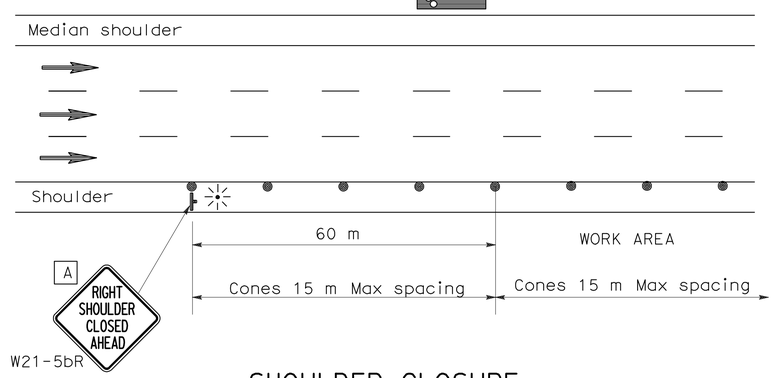

SHOULDER CLOSURE

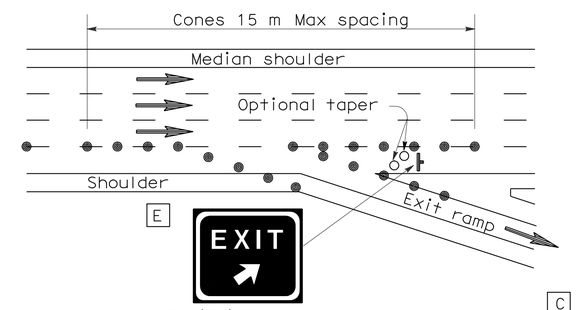

LANE CLOSURE AT EXIT RAMP

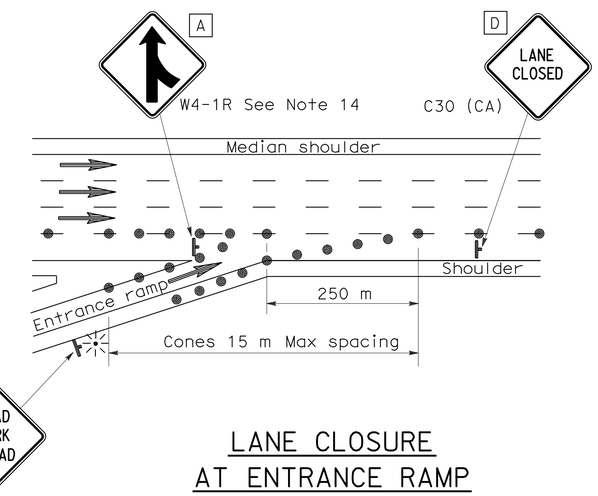

LANE CLOSURE AT ENTRANCE RAMP

NOTES

1. Median lane closures shall conform to the details for outside lane closures except that C20 (CA) (Lt) signs shall be used.
2. At least one person shall be assigned to provide full time maintenance of traffic control devices for lane closures.
3. Duplicate sign installations are not required:
   a) On opposite shoulder if at least one-half of the available lanes remain open to traffic.
   b) In the median if the width of the median shoulder is less than 2.4 m and the outside lanes are to be closed.
4. Each advance warning sign on each side of the roadway shall be equipped with at least two flags for daytime closure. Each flag shall be at least 400 mm x 400 mm in size and shall be orange or fluorescent red-orange in color. Flashing beacons shall be placed at the locations indicated for lane closure during hours of darkness.
5. A C14 (CA) "END ROAD WORK" sign, as appropriate, shall be placed at the end of the lane closure unless the end of work area is obvious or ends within a larger project's limits.
6. If the W20-1 sign would follow within 600 m of a stationary W20-1 or C11 (CA) "ROAD WORK NEXT _____ MILES", use a C20 (CA) sign for the first advance warning sign.
7. Place a C30 (CA) sign every 600 m throughout length of lane closure.
8. One flashing arrow sign for each lane closed. The first flashing arrow sign shall be Type I. All others may be either Type I or Type II.
9. A minimum 450 m of sight distance shall be provided where possible for vehicles approaching the first flashing arrow sign. Lane closures shall not begin at top of crest vertical curve or on a horizontal curve.
10. All cones used for lane closures during the hours of darkness shall be fitted with retroreflective bands (or sleeves) as specified in the specifications.
11. Portable delineators, placed at one-half the spacing indicated for traffic cones may be used instead of cones for daytime closures only.
12. Unless otherwise specified in the special provisions, a minimum of 3 cones shall be placed transversely across each closed lane and shoulder at each location where a taper across a traffic lane ends and every 600 m as shown on the "Lane Closure" detail. Two Type II barricades may be used instead of the 3 cones. The transverse alignment of the cones or barricades on the closed shoulder may be shifted from the transverse alignment to provide access to the work.
13. Unless otherwise specified in the special provisions, the 500 m tangent shown along lane lines shall be used between the 300 m tapers required for each closed traffic lane.
14. Unless otherwise specified in the special provisions, the G84 (CA) and W4-1 signs shall be used as shown.
15. When specified in the special provisions, a W4-2 "LANE ENDS" symbol sign is to be used in place of the C20 (CA) "RIGHT LANE CLOSED AHEAD" sign.
16. The W4-2 "LANE ENDS" symbol sign shown at this location is to be used where the W4-2 sign is used as advance warning as described in Note 15.

SIGN PANEL SIZE (Min)

A	1200 mm x 1200 mm
B	1219 mm x 1219 mm
C	750 mm x 750 mm
D	762 mm x 762 mm
E	1372 mm x 1219 mm

LEGEND

- Traffic Cone
- Traffic Cone (optional taper)
- Temporary Sign
- Flashing Arrow Sign (FAS)
- FAS Support or Trailer
- Direction of Travel
- Portable Flashing Beacon

STATE OF CALIFORNIA
DEPARTMENT OF TRANSPORTATION

TRAFFIC CONTROL SYSTEM FOR LANE CLOSURE ON FREEWAYS AND EXPRESSWAYS

NO SCALE

ALL DIMENSIONS ARE IN MILLIMETERS UNLESS OTHERWISE SHOWN

RSP T10 DATED APRIL 28, 2005 SUPERSEDES STANDARD PLAN T10
DATED JULY 1, 2004-PAGE 218 OF THE STANDARD PLANS BOOK DATED JULY 2004.

REVISED STANDARD PLAN RSP T10

2004 REVISED Std PLAN RSP T10

DIST	COUNTY	ROUTE	KILOMETER POST TOTAL PROJECT	SHEET NO.	TOTAL SHEETS
01	Men	101	R69.4/R78.9	570	939

Greg W. Edwards
REGISTERED CIVIL ENGINEER

April 28, 2005
PLANS APPROVAL DATE

REGISTERED PROFESSIONAL ENGINEER Greg W. Edwards No. C36386 Exp. 6-30-06 CIVIL STATE OF CALIFORNIA

The State of California or its officers or agents shall not be responsible for the accuracy or completeness of electronic copies of this plan sheet.

To get to the Caltrans web site, go to: http://www.dot.ca.gov

Caltrans Metric

To accompany plans dated 1-23-12

LEGEND

- Traffic Cone
- Temporary Sign
- Direction of Travel
- Flashing Arrow Sign (FAS)
- FAS Support or Trailer
- Portable Flashing Beacon

TABLE 1

Approach Speed	*Minimum L	** Max spacing of cones along taper
km/h	m	m
30	38	6
40	38	8
50	98	10
60	98	12
70	183	14
80	183	15
Over 80	See Note 11	

* Use L for lane widths less than or equal to 3.6 m.

** See Note 10

TABLE 2

Approach Speed	Minimum D	Downgrade Minimum D *		
		-3%	-6%	-9%
km/h	m	m	m	m
30	45	45	45	45
40	45	50	50	53
50	45	66	70	74
60	45	87	92	97
70	65	110	116	124
80	85	136	144	154

* Use on sustained downgrade steeper than or equal to grades shown and longer than 1.6 km.

TYPICAL CLOSING OF HALF ROADWAY

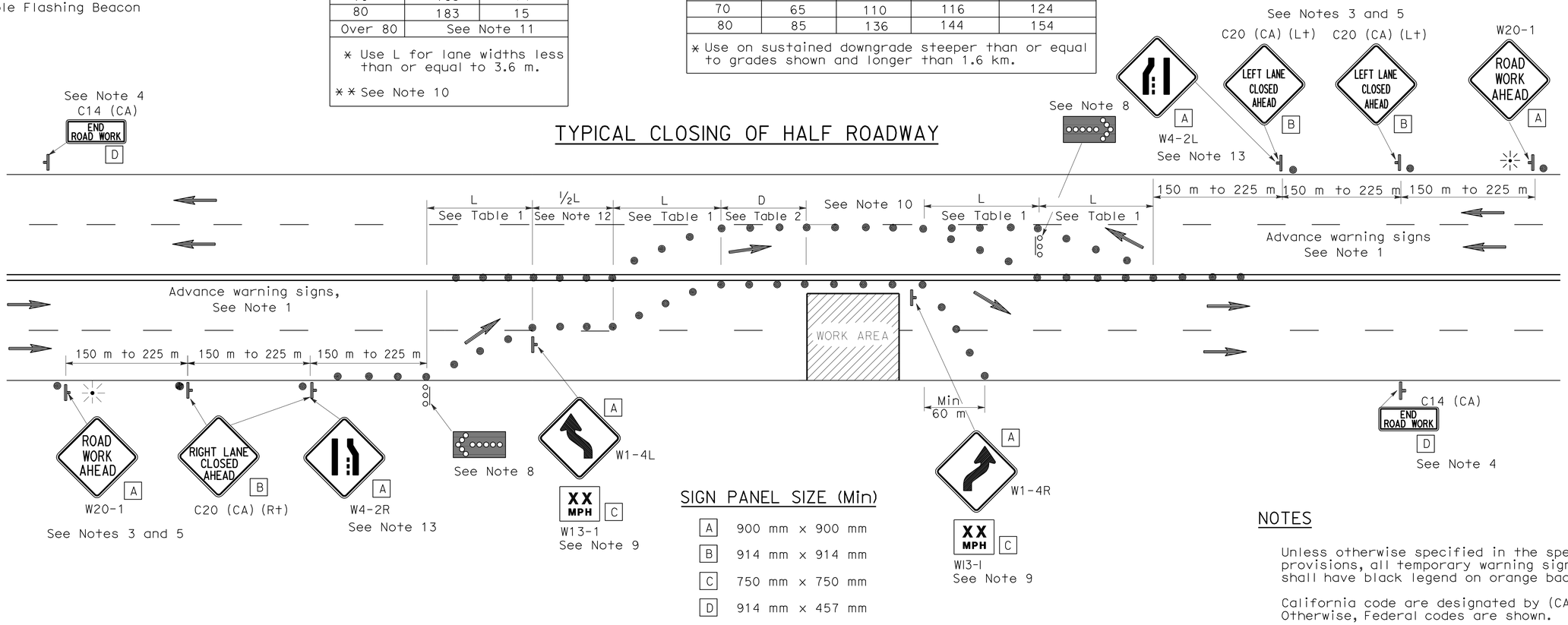

SIGN PANEL SIZE (Min)

A	900 mm x 900 mm
B	914 mm x 914 mm
C	750 mm x 750 mm
D	914 mm x 457 mm

NOTES

Unless otherwise specified in the special provisions, all temporary warning signs shall have black legend on orange background.

California code are designated by (CA). Otherwise, Federal codes are shown.

NOTES

1. Where Approach speeds are low, advance warning signs may be placed at 90 m spacing and placed closer in urban areas.
2. At least one person shall be assigned to provide full time maintenance of traffic control devices for lane closure unless, otherwise directed by the Engineer.
3. Each advance warning sign in each direction of travel shall be equipped with at least two flags for daytime closure. Each flag shall be at least 400 mm x 400 mm in size and shall be orange or fluorescent red-orange in color. Flashing beacons shall be placed at the locations indicated for lane closure during hours of darkness.
4. A C14 (CA) "END ROAD WORK" sign, as appropriate, shall be placed at the end of the lane closure unless the end of work area is obvious, or ends within a larger project's limits.
5. If the W20-1 sign would follow within 600 m of a stationary W20-1 or C11 (CA) "ROAD WORK NEXT _____ MILES", use a C20 (CA) sign for the first advance warning sign.
6. All cones used for lane closures during the hours of darkness shall be fitted with retroreflective bands (or sleeves) as specified in the specifications.
7. Portable delineators, placed at one-half the spacing indicated for traffic cones, may be used instead of cones for daytime closures only.
8. Flashing arrow signs shall be either Type I or Type II.
9. Advisory speed will be determined by the Engineer. The W13-1 Sign will not be required when advisory speed is more than the posted or maximum speed limit.
10. The maximum spacing between cones along a tangent shall be 15 m and along a taper shall be approximately as shown in Table 1.
11. For approach speeds over 80 km/h, use the "Traffic Control System For Lane Closure On Freeways And Expressways" plan for lane closure details and requirements.
12. Unless otherwise specified in the special provisions, the (½ L) shown between the two (L) lane closure tapers shall be used.
13. When specified in the special provisions, a W4-2 "Lane Ends" symbol sign is to be used in place of the C20 (CA) "RIGHT (LEFT) LANE CLOSED AHEAD" sign.

STATE OF CALIFORNIA
DEPARTMENT OF TRANSPORTATION

TRAFFIC CONTROL SYSTEM FOR LANE CLOSURE ON MULTILANE CONVENTIONAL HIGHWAYS

NO SCALE

ALL DIMENSIONS ARE IN MILLIMETERS UNLESS OTHERWISE SHOWN

RSP T12 DATED APRIL 28, 2005 SUPERSEDES STANDARD PLAN T12 DATED JULY 1, 2004-PAGE 221 OF THE STANDARD PLANS BOOK DATED JULY 2004.

REVISED STANDARD PLAN RSP T12

2004 REVISED Std PLAN RSP T12

DIST	COUNTY	ROUTE	KILOMETER POST TOTAL PROJECT	SHEET No.	TOTAL SHEETS
01	Men	101	R69.4/R78.9	571	939

REGISTERED CIVIL ENGINEER

April 28, 2005
PLANS APPROVAL DATE

REGISTERED PROFESSIONAL ENGINEER G.W. Edwards No. C36386 Exp. 6-30-06 CIVIL STATE OF CALIFORNIA

The State of California or its officers or agents shall not be responsible for the accuracy or completeness of electronic copies of this plan sheet.

To get to the Caltrans web site, go to: http://www.dot.ca.gov

Caltrans Metric

To accompany plans dated 1-23-12

NOTES

Unless otherwise specified in the special provisions, all temporary warning signs shall have black legend on orange background.

California code are designated by (CA). Otherwise, Federal codes are shown.

TYPICAL LANE CLOSURE WITH REVERSIBLE CONTROL

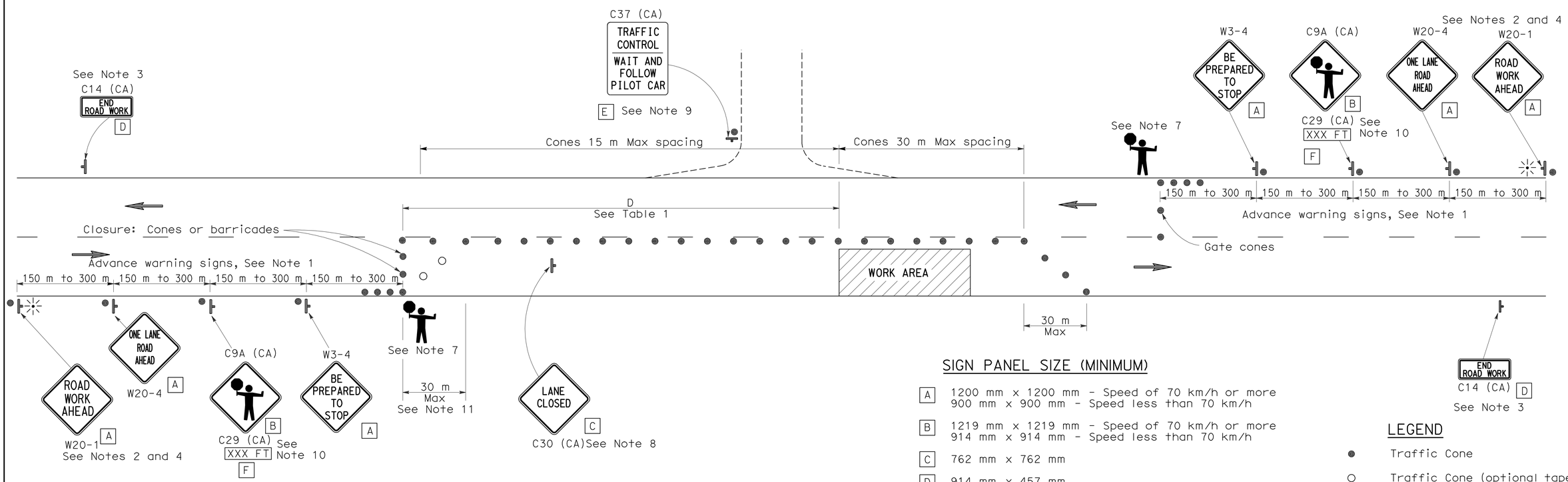

SIGN PANEL SIZE (MINIMUM)

A	1200 mm x 1200 mm - Speed of 70 km/h or more 900 mm x 900 mm - Speed less than 70 km/h
B	1219 mm x 1219 mm - Speed of 70 km/h or more 914 mm x 914 mm - Speed less than 70 km/h
C	762 mm x 762 mm
D	914 mm x 457 mm
E	914 mm x 1067 mm
F	914 mm x 229 mm

LEGEND

- Traffic Cone
- Traffic Cone (optional taper)
- Temporary Sign
- Direction of Travel
- Portable Flashing Beacon
- Flagger

NOTES

1. Where approach speeds are low, advance warning signs may be placed at 90 m spacing, and closer in urban areas.
2. Each advance warning sign in each direction of travel shall be equipped with at least two flags for daytime closure. Each flag shall be at least 400 mm x 400 mm in size and shall be orange or fluorescent red-orange in color. Flashing beacons shall be placed at the locations indicated for lane closure during hours of darkness.
3. A C14 (CA) "END ROAD WORK" sign, as appropriate, shall be placed at the end of the lane control unless the end of work area is obvious, or ends within a larger project's limits.
4. If the W20-1 sign would follow within 600 m of a stationary W20-1 or C11 (CA) "ROAD WORK NEXT_____ MILES", use a C16 (CA) sign for the first advance warning sign.
5. All cones used for lane closures during the hours of darkness shall be fitted with retroreflective bands (or sleeves) as specified in the specifications.
6. Portable delineators, placed at one-half the spacing indicated for traffic cones, may be used instead of cones for daytime closures only.
7. Additional advance flaggers may be required. Flagger should stand in a conspicuous place, be visible to approaching traffic as well as approaching vehicles after the first vehicle has stopped. During the hours of darkness, the flagging-station and flagger shall be illuminated and clearly visible to approaching traffic. The illumination footprint of the lighting on the ground shall be at least 6 m in diameter. Place a minimum of four cones at 15 m intervals in advance of flagger station as shown.
8. Place C30 (CA) "LANE CLOSED" sign at 150 to 300 m intervals throughout extended work areas. They are optional if the work area is visible from the flagger station.
9. When a pilot car is used, place a C37 (CA) "TRAFFIC CONTROL-WAIT AND FOLLOW PILOT CAR" sign at all intersections within traffic control area. Signs shall be clean and visible at all times.
10. An optional C29 (CA) sign may be placed below the C9A (CA) sign.
11. Traffic cones or barricades may be placed on the optional taper as shown, barricades shall be Type I, II, or III.

TABLE I

Approach Speed	Minimum D	Downgrade Minimum D *
km/h	m	m
30	60	72
40	60	72
50	60	72
60	90	108
70	90	108
80	150	180
90	150	180
100	150	180
110	170	204

* Use on substained downgrade steeper than -3 percent and longer than 1.6 km.

STATE OF CALIFORNIA
DEPARTMENT OF TRANSPORTATION

TRAFFIC CONTROL SYSTEM FOR LANE CLOSURE ON TWO LANE CONVENTIONAL HIGHWAYS

NO SCALE

ALL DIMENSIONS ARE IN MILLIMETERS UNLESS OTHERWISE SHOWN

RSP T13 DATED APRIL 28, 2005 SUPERSEDES STANDARD PLAN T13 DATED JULY 1, 2004-PAGE 222 OF THE STANDARD PLANS BOOK DATED JULY 2004.

REVISED STANDARD PLAN RSP T13

2004 REVISED Std PLAN RSP T13

To accompany plans dated 1-23-12

Caltrans Metric

DIST	COUNTY	ROUTE	KILOMETER POST TOTAL PROJECT	SHEET NO.	TOTAL SHEETS
01	Men	101	R69.4/R78.9	572	939

REGISTERED CIVIL ENGINEER

April 28, 2005
PLANS APPROVAL DATE

REGISTERED PROFESSIONAL ENGINEER Greg W. Edwards No. C36386 Exp. 6-30-06 CIVIL STATE OF CALIFORNIA

The State of California or its officers or agents shall not be responsible for the accuracy or completeness of electronic copies of this plan sheet.

To get to the Caltrans web site, go to: http://www.dot.ca.gov

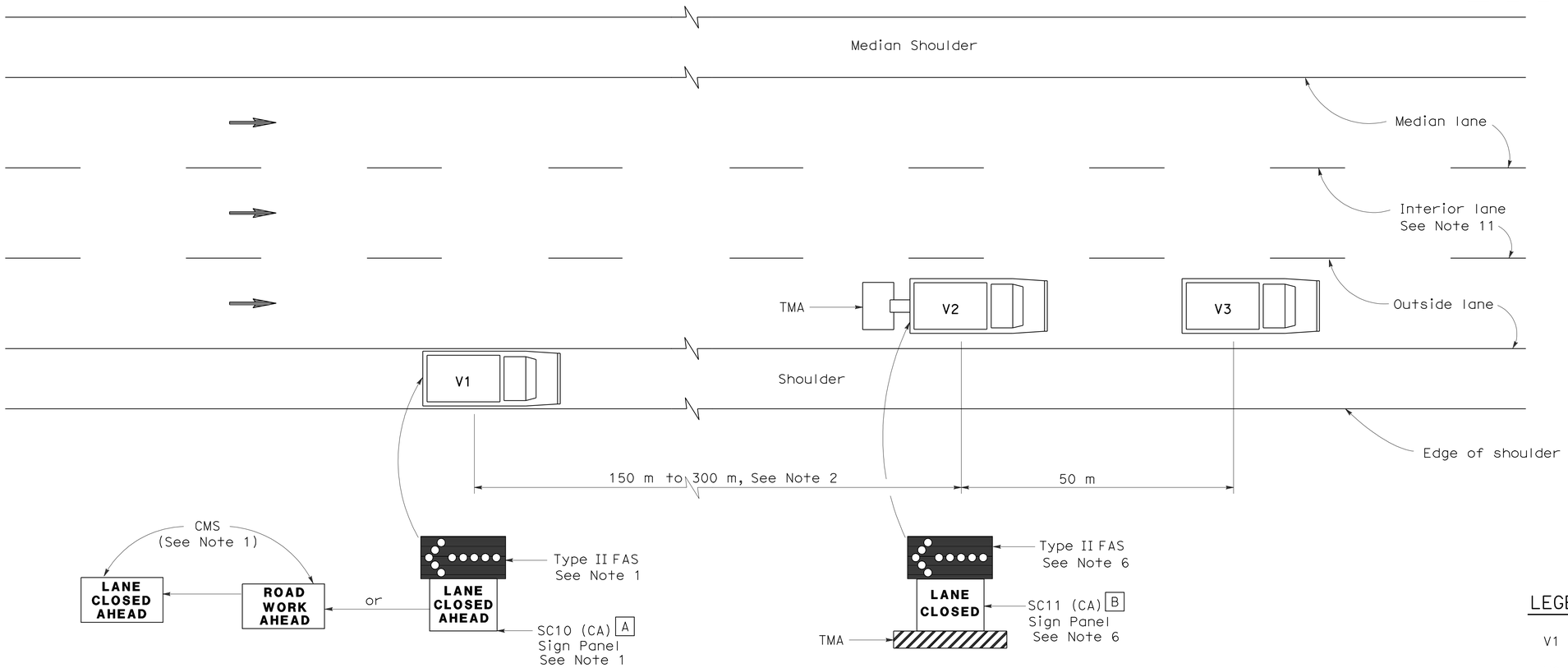

MOVING LANE CLOSURE ON MEDIAN OR OUTSIDE LANE OF MULTILANE HIGHWAYS

SIGN PANEL SIZE (Min)

A 1676 mm x 914 mm

B 1372 mm x 1067 mm

LEGEND

V1	Sign Vehicle
V2	Shadow Vehicle
V3	Work/Application Vehicle
	Flashing Arrow Sign (FAS)
CMS	Changeable Message Sign
TMA	Truck-Mounted Attenuator
	Direction of Travel

NOTES

1. Either a changeable message sign or a SC10 (CA) sign panel and a Type II flashing arrow sign shall be mounted on the rear of sign vehicle V1. A Type II flashing arrow sign shall be mounted on the rear of sign vehicle V1 and used with the SC10 (CA) sign panel. A Type II flashing arrow sign will not be required with the changeable message sign provided the flashing arrow sign symbol is displayed on the changeable message sign board. The changeable message sign shall be sequenced to show the "ROAD WORK AHEAD" message first, followed by the "LANE CLOSED AHEAD" message and then the flashing arrow sign symbol. For median lane closure, the flashing arrow symbol shall be reversed with the arrowhead on the right.
2. If traffic queues develop, sign vehicle V1 should be positioned upstream from the end of queue. Sign vehicle V1 shall be positioned where highly visible when shoulders are not available.
3. A minimum sight distance of 450 m should be provided in advance of sign vehicle V1.
4. Sign vehicle V1 should remain at the beginning of horizontal or vertical curves until the other vehicles (V2 and V3) are far enough beyond the curve to resume the minimum sight distance of 450 m.
5. Vehicle-mounted sign panels shall be Type III, IV, VII, VIII or IX retroreflective sheeting, black on white, black on orange, or black on fluorescent orange, with 150 mm minimum series D letters per Caltrans sign specifications.
6. Gross Vehicle Weight of shadow vehicle V2 shall be a minimum of 9000 kilograms and shall be equipped with a truck-mounted attenuator. The sign panel shown and a Type II flashing arrow sign shall be mounted on the rear of shadow vehicle V2. For median lane closure the flashing arrow sign symbol shall be displayed with the arrowhead on the right.
7. All vehicles used for lane closures shall be equipped with two-way radios, and the vehicle operators shall maintain communication during the work or application operation.
8. All vehicles shall be equipped with flashing or rotating amber lights.
9. Where sufficient shoulder width is not available, sign vehicle V1 may encroach into the traffic lane staying as close to the edge of shoulder as practicable. Both V1 and V2 shall be equipped with a truck-mounted attenuator. The Gross Vehicle Weight of V1 and V2 shall be at least 9000 kg, respectively.
10. Where workers would be on foot in the work area, a stationary type lane closure (Revised Standard Plan RSP T10, RSP T11, etc., as applicable) shall be used instead of this plan.
11. For moving lane closure on interior lane of multilane highways, see Revised Standard Plan RSP T16.
12. When multiple work vehicles are used in close proximity to each other, only one shadow vehicle is required, and spacing between work vehicles shall be minimized in order to deter traffic from entering the closdlane.

STATE OF CALIFORNIA
DEPARTMENT OF TRANSPORTATION

TRAFFIC CONTROL SYSTEM FOR MOVING LANE CLOSURE ON MULTILANE HIGHWAYS

NO SCALE

ALL DIMENSIONS ARE IN MILLIMETERS UNLESS OTHERWISE SHOWN

RSP T15 DATED APRIL 28, 2005 SUPERSEDES STANDARD PLAN T15 DATED JULY 1, 2004-PAGE 224 OF THE STANDARD PLANS BOOK DATED JULY 2004.

REVISED STANDARD PLAN RSP T15

2004 REVISED Std PLAN RSP T15

DIST	COUNTY	ROUTE	KILOMETER POST TOTAL PROJECT	SHEET NO.	TOTAL SHEETS
01	Men	101	R69.4/R78.9	573	939

REGISTERED CIVIL ENGINEER

April 28, 2005
PLANS APPROVAL DATE

REGISTERED PROFESSIONAL ENGINEER G.W. Edwards No. C36386 Exp. 6-30-06 CIVIL STATE OF CALIFORNIA

The State of California or its officers or agents shall not be responsible for the accuracy or completeness of electronic copies of this plan sheet.

To get to the Caltrans web site, go to: http://www.dot.ca.gov

To accompany plans dated 1-23-12

2004 REVISED Std PLAN RSP T16

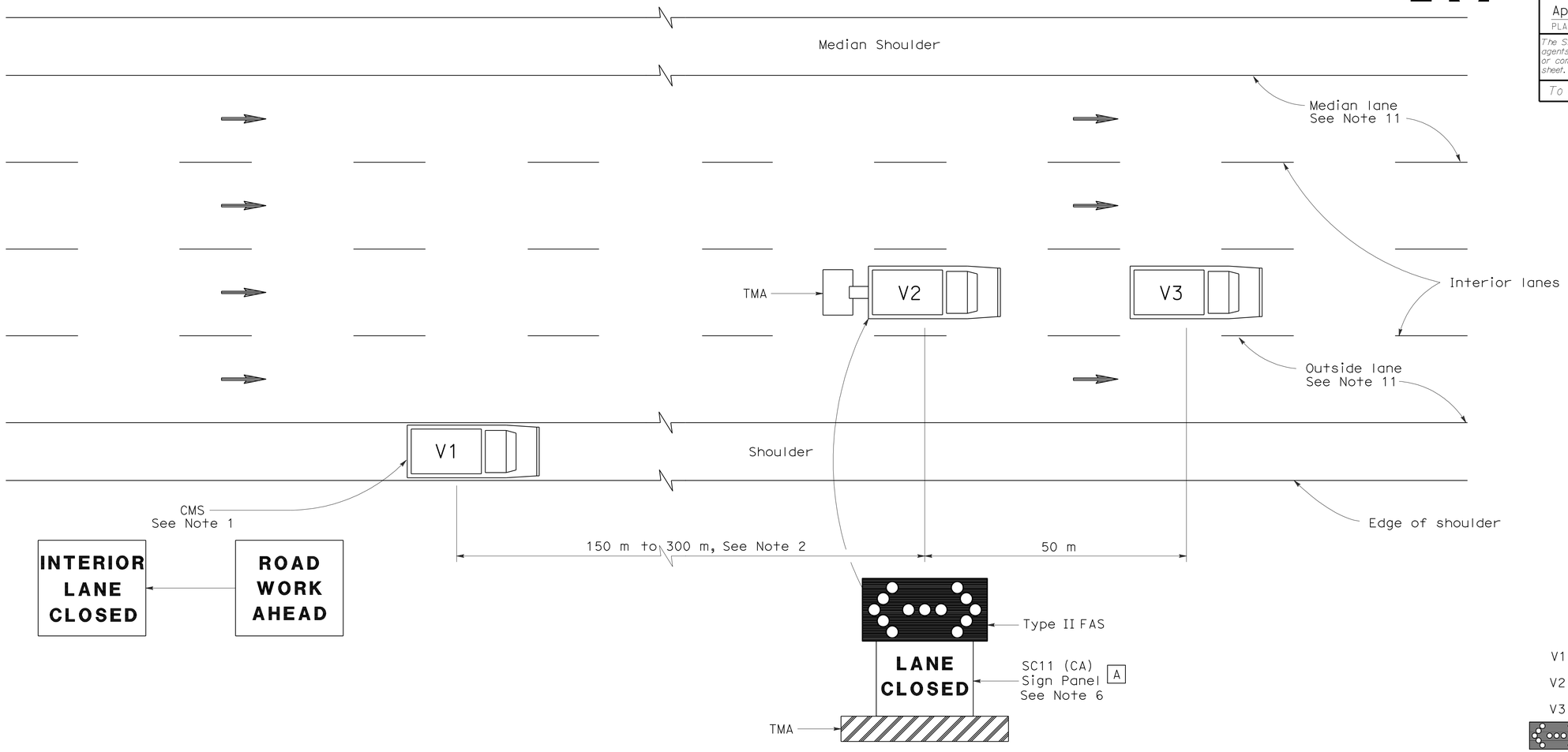

SIGN PANEL SIZE (Min)

A 1372 mm x 1067 mm

LEGEND

V1	Sign Vehicle
V2	Shadow Vehicle
V3	Work/Application Vehicle
	Flashing Arrow Sign (FAS) in flashing double arrow mode
CMS	Changeable Message Sign
TMA	Truck-Mounted Attenuator
	Direction of Travel

MOVING LANE CLOSURE ON INTERIOR LANE OF MULTILANE HIGHWAYS

NOTES

1. A changeable message sign shall be mounted on the rear of sign vehicle V1. The changeable message sign shall be sequenced to show the "ROAD WORK AHEAD" message first, followed by the "INTERIOR LANE CLOSED" message. The message "CENTER LANE CLOSED" may be used in place of the "INTERIOR LANE CLOSED" message.
2. If traffic queues develop, sign vehicle V1 should be positioned upstream from the end of queue. Sign vehicle V1 shall be positioned where highly visible when shoulders are not available.
3. A minimum sight distance of 450 m should be provided in advance of sign vehicle V1.
4. Sign vehicle V1 should remain at the beginning of horizontal or vertical curves until the other vehicles (V2 and V3) are far enough beyond the curve to resume the minimum sight distance of 450 m.
5. Vehicle-mounted sign panels shall be Type III, IV, VII, VIII, or IX retroreflective sheeting, black on white, black on orange, or black on fluorescent orange, with 150 mm minimum series D letters per Caltrans sign specifications.
6. Gross Vehicle Weight of shadow vehicle V2 shall be a minimum of 9000 kilograms and shall be equipped with a truck-mounted attenuator. The sign panel shown and a Type II flashing arrow sign shall be mounted on the rear of shadow vehicle V2.
7. All vehicles used for lane closures shall be equipped with two-way radios, and the vehicle operators shall maintain communication during the work or application operation.
8. All vehicles shall be equipped with flashing or rotating amber lights.
9. Where sufficient shoulder width is not available, sign vehicle V1 may encroach into the traffic lane staying as close to the edge of shoulder as practicable. Both V1 and V2 shall be equipped with a truck-mounted attenuator. The Gross Vehicle Weight of V1 and V2 shall be at least 9000 kg, respectively.
10. Where workers would be on foot in the work area, a stationary type lane closure (Revised Standard Plan RSP T10, RSP T11 etc., as applicable) shall be used instead of this plan.
11. For moving lane closure on median or outside lanes of multilane highways, see Revised Standard Plan RSP T15.
12. When multiple work vehicles are used in close proximity to each other, only one shadow vehicle is required, and spacing between work vehicles shall be minimized in order to deter traffic from entering the closed lane.

STATE OF CALIFORNIA
DEPARTMENT OF TRANSPORTATION

TRAFFIC CONTROL SYSTEM FOR MOVING LANE CLOSURE ON MULTILANE HIGHWAYS

NO SCALE

ALL DIMENSIONS ARE IN MILLIMETERS UNLESS OTHERWISE SHOWN

RSP T16 DATED APRIL 28, 2005 SUPERSEDES STANDARD PLAN T16 DATED JULY 1, 2004-PAGE 225 OF THE STANDARD PLANS BOOK DATED JULY 2004.

REVISED STANDARD PLAN RSP T16

DIST	COUNTY	ROUTE	KILOMETER POST TOTAL PROJECT	SHEET NO.	TOTAL SHEETS
01	Men	101	R69.4/R78.9	574	939

Caltrans Metric

REGISTERED CIVIL ENGINEER

October 5, 2007
PLANS APPROVAL DATE

REGISTERED PROFESSIONAL ENGINEER Efthymios Delis No. C51434 Exp. 6-30-08 CIVIL STATE OF CALIFORNIA

The State of California or its officers or agents shall not be responsible for the accuracy or completeness of electronic copies of this plan sheet.

To get to the Caltrans web site, go to: http://www.dot.ca.gov

To accompany plans dated 1-23-12

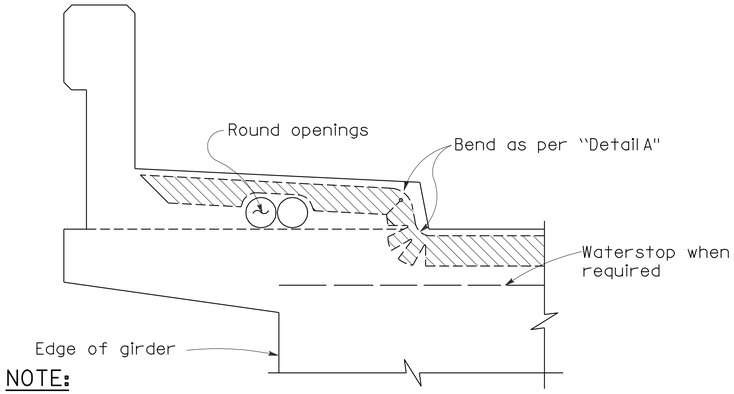

NOTE:
Type "B" seal shown. Type "A" seals to comform to the general path of seal shown, cuts for bending not required. Bend Type "A" seals 75 mm up into curb or barrier rail on only the low end of the seal.

CONCRETE BARRIER AND SIDEWALK

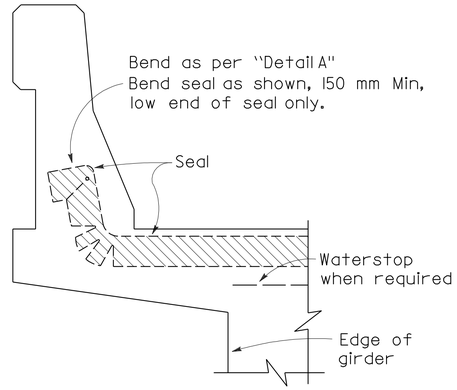

CONCRETE BARRIER

JOINT SEALS DETAILS

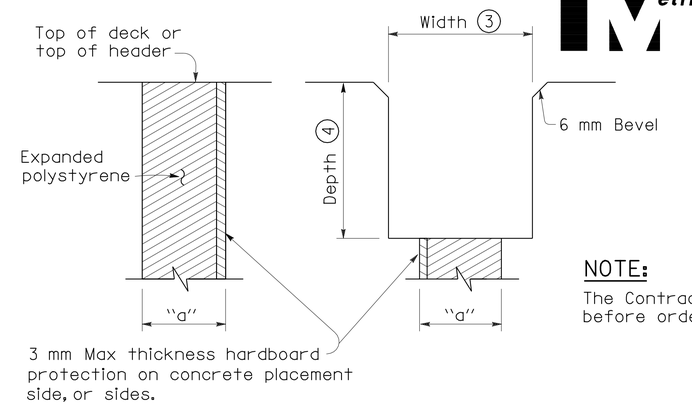

FORMING DETAIL SAWCUT DETAIL

NOTE:
The Contractor shall verify all controlling field dimensions before ordering or fabricating any material.

NOTES:

1. Make smooth cuts from the bottom of seal to 40 mm clear of top leaving at least one complete cell between the top of the cut and top of the seal. When necessary cut back of seal to clear conduit and round openings.
2. Opening in barrier to match width of sawn deck joint.
3. Sawcut groove widths shall be as ordered by the Engineer.
4. Depth of sawcut: Type A - Depth to be 50 mm minimum.
   Type B - Depth to be equal to or greater than the depth of seal measured along the contact surface, when compressed to minimum width position (W_2) plus dimensions shown above.
5. MR (movement rating) as shown on other plan sheets.
6. Other depths must be approved by the Engineer.

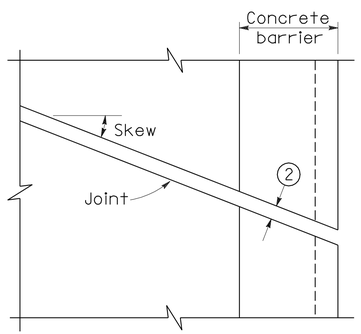

PLAN OF JOINT (SKEW ≤ 20°)

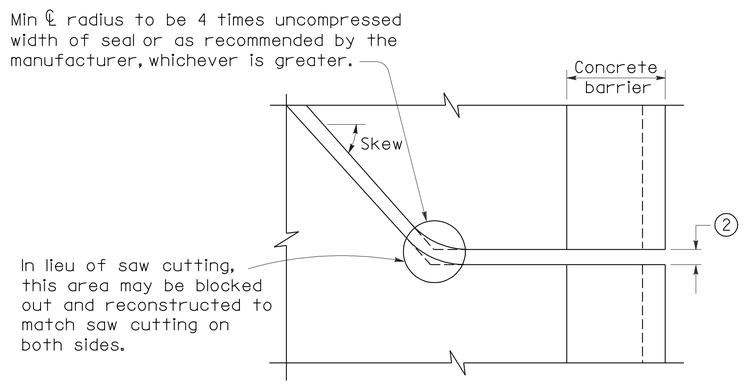

PLAN OF JOINT (SKEW > 20°)

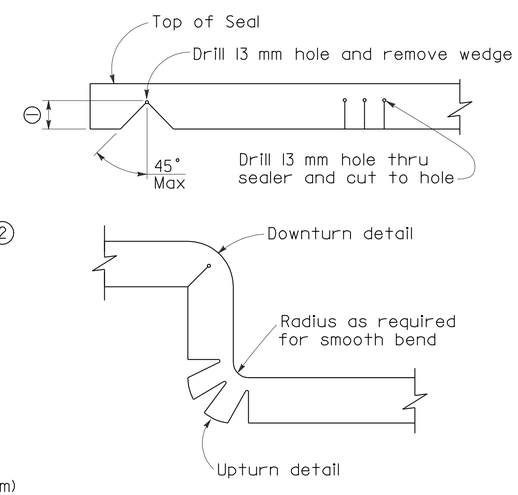

DETAIL A

DIMENSIONS "a" OF JOINT REQUIRED

Movement Rating (MR) ⑤	Bridge Type	"a" Dimension Deck Concrete Placed		
		Winter	Fall-Spring	Summer
50 mm	All except CIP/PS	40 mm	30 mm	20 mm
	CIP/PS	30 mm	25 mm	13 mm
40 mm	All except CIP/PS	30 mm	25 mm	13 mm
	CIP/PS	25 mm	20 mm	13 mm
25 mm	All except CIP/PS	25 mm	20 mm	13 mm
	CIP/PS	20 mm	13 mm	13 mm
13 mm	All except CIP/PS	20 mm	20 mm	13 mm
	CIP/PS	13 mm	13 mm	13 mm

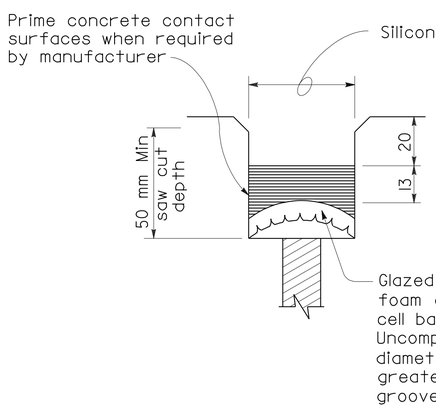

TYPE A SEAL
Movement rating : Silicone = 25 mm Max

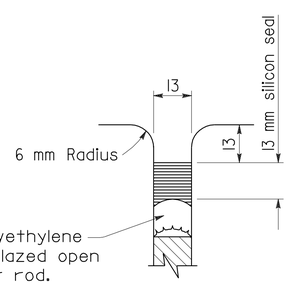

TYPE AL SEAL
Longitudinal joints only

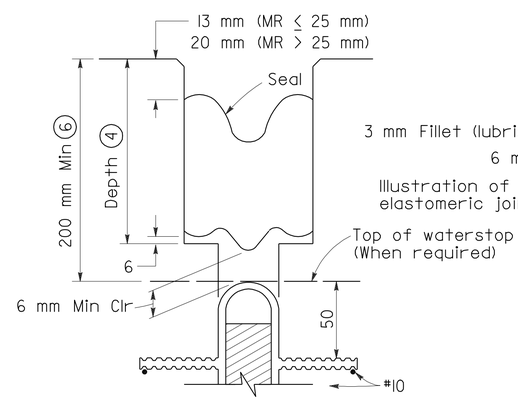

TYPE B JOINT SEAL
IN MINIMUM WIDTH POSITION (W_2)

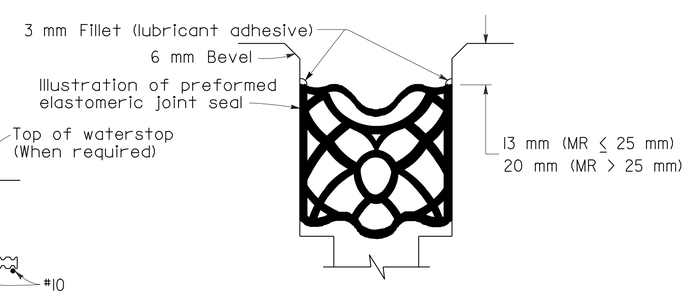

TYPE B SEAL
Movement Rating ≤ 50 mm

STATE OF CALIFORNIA
DEPARTMENT OF TRANSPORTATION

JOINT SEALS (MAXIMUM MOVEMENT RATING = 50 mm)

NO SCALE

ALL DIMENSIONS ARE IN MILLIMETERS UNLESS OTHERWISE SHOWN

RSP B6-21 DATED OCTOBER 5, 2007 SUPERSEDES RSP B6-21 DATED JANUARY 26, 2005 AND STANDARD PLAN B6-21 DATED JULY 1, 2004-PAGE 258 OF THE STANDARD PLANS BOOK DATED JULY 2004.

REVISED STANDARD PLAN RSP B6-21

2004 REVISED Std PLAN RSP B6-21

5-17-07

To accompany plans dated 1-23-12

Caltrans Metric

DIST	COUNTY	ROUTE	KILOMETER POST TOTAL PROJECT	SHEET NO.	TOTAL SHEETS
01	Men	101	R69.4/R78.9	575	939

REGISTERED CIVIL ENGINEER

April 28, 2005
PLANS APPROVAL DATE

REGISTERED PROFESSIONAL ENGINEER Michael Pope No. C54503 Exp. 12-31-05 CIVIL STATE OF CALIFORNIA

The State of California or its officers or agents shall not be responsible for the accuracy or completeness of electronic copies of this plan sheet.

To get to the Caltrans web site, go to: http://www.dot.ca.gov

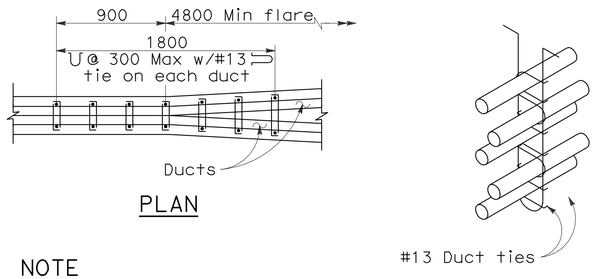

PLAN

NOTE

Place closed end of duct ties in direction of flare.

STIRRUP REINFORCEMENT AT FLARE OF GIRDER STEM

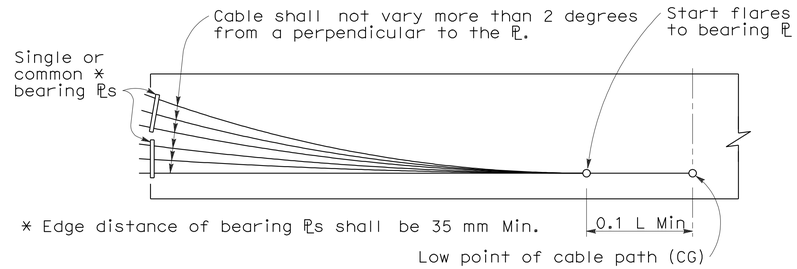

BEARING PLATE PRESTRESSING PATH

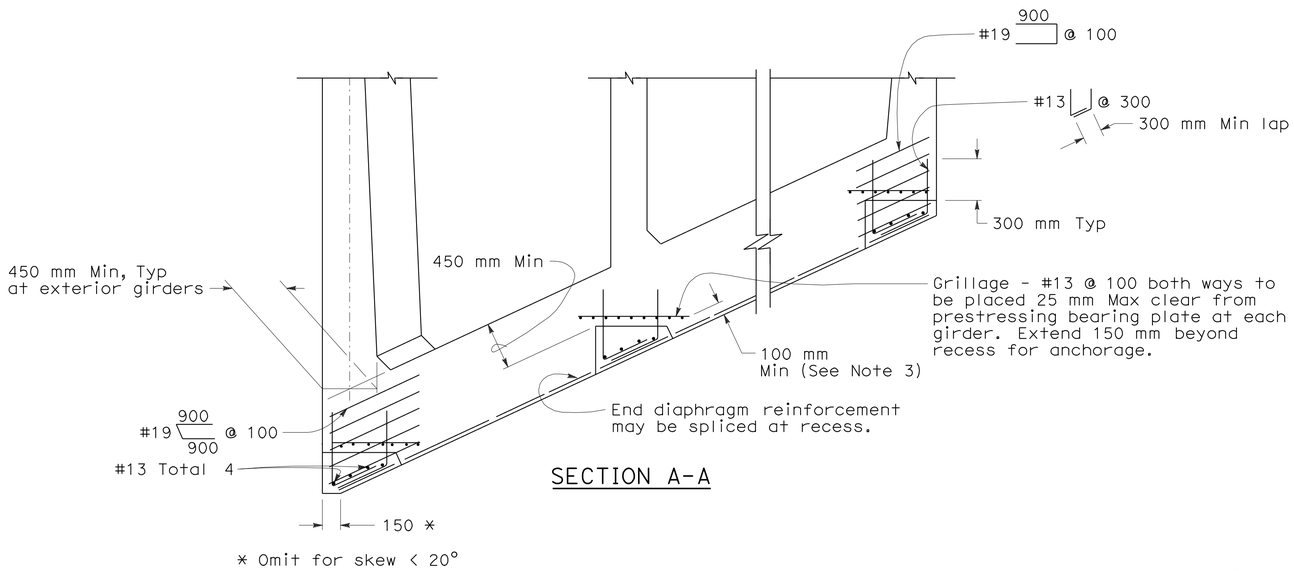

SECTION A-A

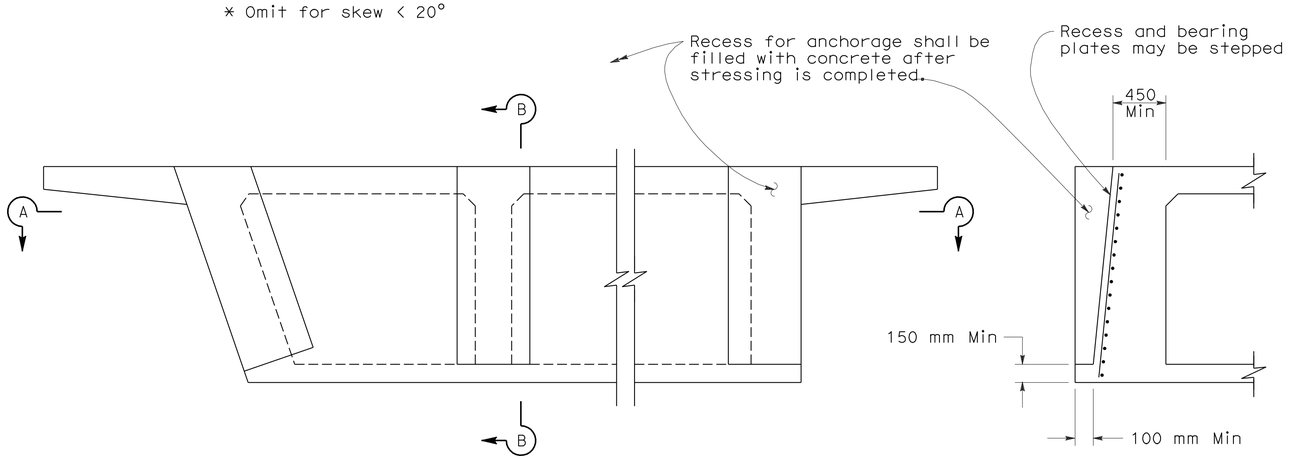

PRESTRESS ANCHORAGE DETAILS AT SEAT TYPE ABUTMENTS

SECTION B-B

NOTES

Distribution of prestressing force:

Unless otherwise noted, the prestressing force shall be distributed with an approximately equal amount in each girder and shall be placed symmetrically about the center line of the structure. In slabs, the prestressing force shall be uniformly distributed across the slab.

Stressing sequence:

No more than ½ of the prestressing force in any girder may be applied before an equal force is applied in the adjacent girders. The maximum force variation between girders shall also not exceed the prestressing force of the largest tendon used in all girders. At no time during stressing operations will more than 1/6 of total prestressing force be applied eccentrically about the centerline of the structure.

Girder stem may be flared near anchorage to provide clearances for the particular anchorage system.

Place duct ties, as shown for flare girder stem, at each location where ducts change horizontal direction.

Bar reinforcement interfering with the prestressing tendon alignment shall be adjusted, as approved by the Engineer.

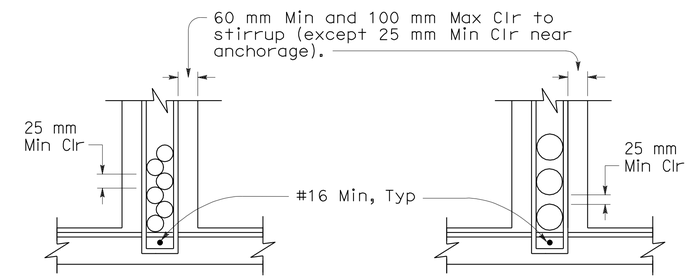

DUCTS 114 mm OD AND LESS

DUCTS OVER 114 mm OD

CLEARANCE REQUIREMENTS FOR DUCTS

NOTES

1. Duct patterns shown are for a 300 mm wide girder stem. For other widths the minimum clearances must be maintained.
2. ⊔ Stirrups may also be used. For continuous stirrups in girder stems greater than 400 mm wide (ie: at flares) use 2-#16 minimum ⊔ or ⊔.
3. 100 mm minimum is not required if this detail is used at hinge location.
4. For additional details, see Standard Plan B7-1.
5. Approval of the Engineer is required for deviations.

STATE OF CALIFORNIA
DEPARTMENT OF TRANSPORTATION

CAST-IN-PLACE PRESTRESSED GIRDER DETAILS

NO SCALE

ALL DIMENSIONS ARE IN MILLIMETERS UNLESS OTHERWISE SHOWN

RSP B8-5 DATED APRIL 28, 2005 SUPERSEDES STANDARD PLAN B8-5 DATED JULY 1, 2004-PAGE 266 OF THE STANDARD PLANS BOOK DATED JULY 2004.

REVISED STANDARD PLAN RSP B8-5

2004 REVISED Std PLAN RSP B8-5

DIST	COUNTY	ROUTE	KILOMETER POST TOTAL PROJECT	SHEET NO.	TOTAL SHEETS
01	Men	101	R69.4/R78.9	576	939

REGISTERED CIVIL ENGINEER

January 24, 2005
PLANS APPROVAL DATE

REGISTERED PROFESSIONAL ENGINEER — Tillat Sattar — No. C42892 — Exp. 03-31-2006 — CIVIL — STATE OF CALIFORNIA

The State of California or its officers or agents shall not be responsible for the accuracy or completeness of electronic copies of this plan sheet.

To get to the Caltrans web site, go to: http://www.dot.ca.gov

To accompany plans dated 1-23-12

2004 REVISED Std PLAN RSP S1

INSTRUCTIONS TO FABRICATOR

PROJECT PLANS SHOW:

1. Sign structure location.
2. Length of structure frame.
3. Panel size and locations on structure.
4. Walkway length for two post signs.
5. Post type and height to bottom of frame.
6. Base plate elevation.
7. Footing elevation or location of pile foundation.
8. Photoelectric unit location if required.

REFER TO THE FOLLOWING STANDARD PLANS FOR DETAILS NOT SHOWN ON PROJECT PLANS:

Sheet #	SHEET NAME
RSP S1	Overhead Signs-Truss, Instructions and Examples
RSP S2	Overhead Signs-Truss, Single Post Type, Post Types II to IX
RSP S3	Overhead Signs-Truss, Single Post Type, Base Plate and Anchorage Details
RSP S4	Overhead Signs-Truss, Single Post Type, Structural Frame Members Details No. 1
RSP S5	Overhead Signs-Truss, Single Post Type, Structural Frame Members Details No. 2
RSP S6	Overhead Signs-Truss, Gusset Plate Details
RSP S7	Overhead Signs-Truss, Single Post Type, Square Pedestal Pile Foundation
RSP S8	Overhead Signs-Truss, Single Post Type, Round Pedestal Pile Foundation
RSP S9	Overhead Signs-Truss, Two Post Type, Post Types I-S through VII-S
RSP S10	Overhead Signs-Truss, Two Post Type, Base Plate and Anchorage Details
RSP S11	Overhead Signs-Truss, Two Post Type, Structural Frame Members
RSP S12	Overhead Signs-Truss, Structural Frame Details
RSP S13	Overhead Signs-Truss, Frame Juncture Details
RSP S14	Overhead Signs-Truss, Two Post Type, Square Pedestal Pile Foundation
RSP S15	Overhead Signs-Truss, Two Post Type, Round Pedestal Pile Foundation
RSP S16	Overhead Signs, Walkway Details No. 1
RSP S17	Overhead Signs, Walkway Details No. 2
NSP S17A	Overhead Signs, Walkway Details No. 3
RSP S18	Overhead Signs, Walkway Safety Railing Details
RSP S19	Overhead Signs-Truss, Sign Mounting Details, Laminated Panel-Type A
RSP S20	Overhead Signs, Steel Frames, Removable Sign Panel Frames
RSP S21	Overhead Signs, Removable Sign Panel Frames, Mounting Details
RSP S22	Overhead Signs-Truss, Removable Sign Panel Frames, 2794 mm and 3048 mm Sign Panels

WALKWAY BRACKETS:

Space all walkway brackets maintaining uniform spacing where possible. Maximum spacing shall not exceed 1676 mm.

LIGHTING FIXTURE SUPPORTS:

Where distance from walkway bracket to end of sign panel exceeds 406 mm, extend lighting fixture supports to next walkway bracket. See Example No. 2.

WALKWAY AND SAFETY RAILING:

Walkway to be continuous for entire length of frame for single post signs. For two post signs, see Project Plans. Safety railing to protect entire walkway, but continuous for no more than 3353 mm in one unit.

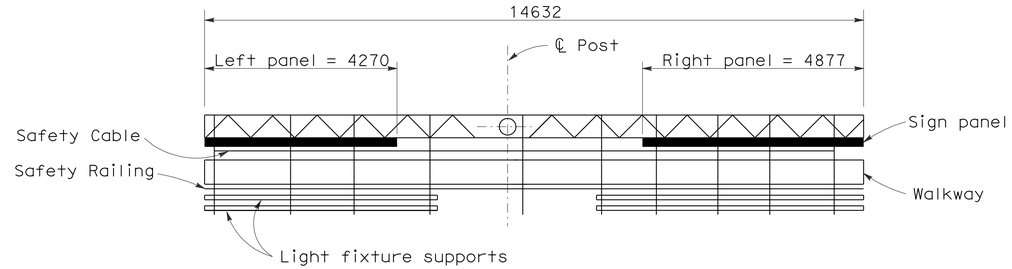

PLAN

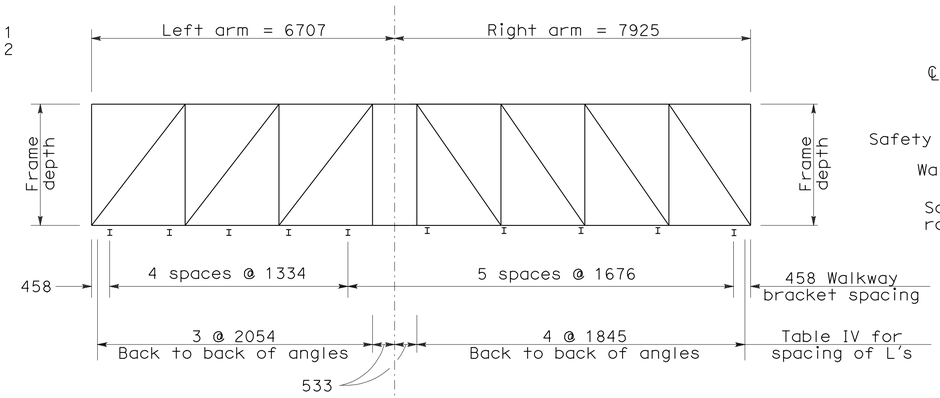

UNBALANCED SINGLE POST TYPE

Example No. 1

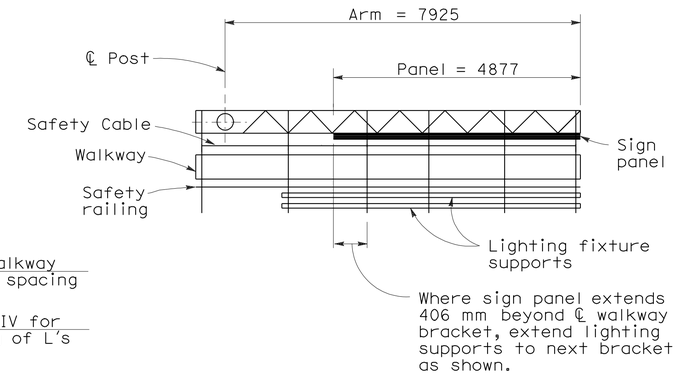

PLAN

CANTILEVER SINGLE POST TYPE

Example No. 2

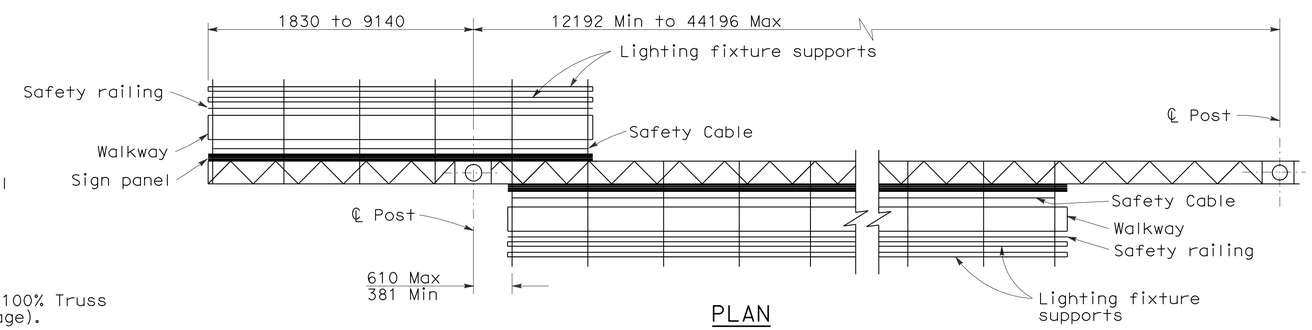

PLAN

TWO POST TYPE WITH CANTILEVER (PART DOUBLE-FACED)

Example No. 3

GENERAL NOTES

DESIGN:

AASHTO Specifications for Structural Supports for Highway Signs, Luminaires and Traffic Signals, dated 2001.

CONSTRUCTION:

Standard Specifications and the Special Provisions.

LOADING:

WIND LOADING:

Normal to face of sign: 1930 Pa on 100% Truss surface area (i.e. 100% panel coverage).

Transverse to face of sign: 20% of normal force.

WALKWAY LOADING:

Dead load +229 kg concentrated live load.

UNIT STRESSES:

STRUCTURAL STEEL: fy = 250 MPa
REINFORCED CONCRETE: fy = 415 MPa
f'c = 25 MPa

FOOTING SOIL PRESSURE: 120 kPa (spread footing)

MINIMUM CLEARANCE

Vertical roadway clearance 5500 mm.

WELDING:

All welding continuous unless otherwise noted on the plans. All welding to be done in accordance with the Standard Specifications.

Standard Plan Sheet No.

Detail No.

NOTE

Signs are shown and dimensioned looking in the direction of traffic. Double faced signs are shown and dimensioned looking ahead along stationing.

STATE OF CALIFORNIA
DEPARTMENT OF TRANSPORTATION

OVERHEAD SIGNS-TRUSS INSTRUCTIONS AND EXAMPLES

NO SCALE

ALL DIMENSIONS ARE IN MILLIMETERS UNLESS OTHERWISE SHOWN

RSP S1 DATED JANUARY 24, 2005 SUPERSEDES STANDARD PLAN S1 DATED JULY 1, 2004-PAGE 310 OF THE STANDARD PLANS BOOK DATED JULY 2004.

REVISED STANDARD PLAN RSP S1

DIST	COUNTY	ROUTE	KILOMETER POST TOTAL PROJECT	SHEET NO.	TOTAL SHEETS
01	Men	101	R69.4/R78.9	577	939

REGISTERED CIVIL ENGINEER

April 28, 2005
PLANS APPROVAL DATE

REGISTERED PROFESSIONAL ENGINEER
Tillat Sattar
No. C42892
Exp. 03-31-2006
CIVIL
STATE OF CALIFORNIA

The State of California or its officers or agents shall not be responsible for the accuracy or completeness of electronic copies of this plan sheet.

To get to the Caltrans web site, go to: http://www.dot.ca.gov

Caltrans Metric

To accompany plans dated 1-23-12

2004 REVISED Std PLAN RSP S2

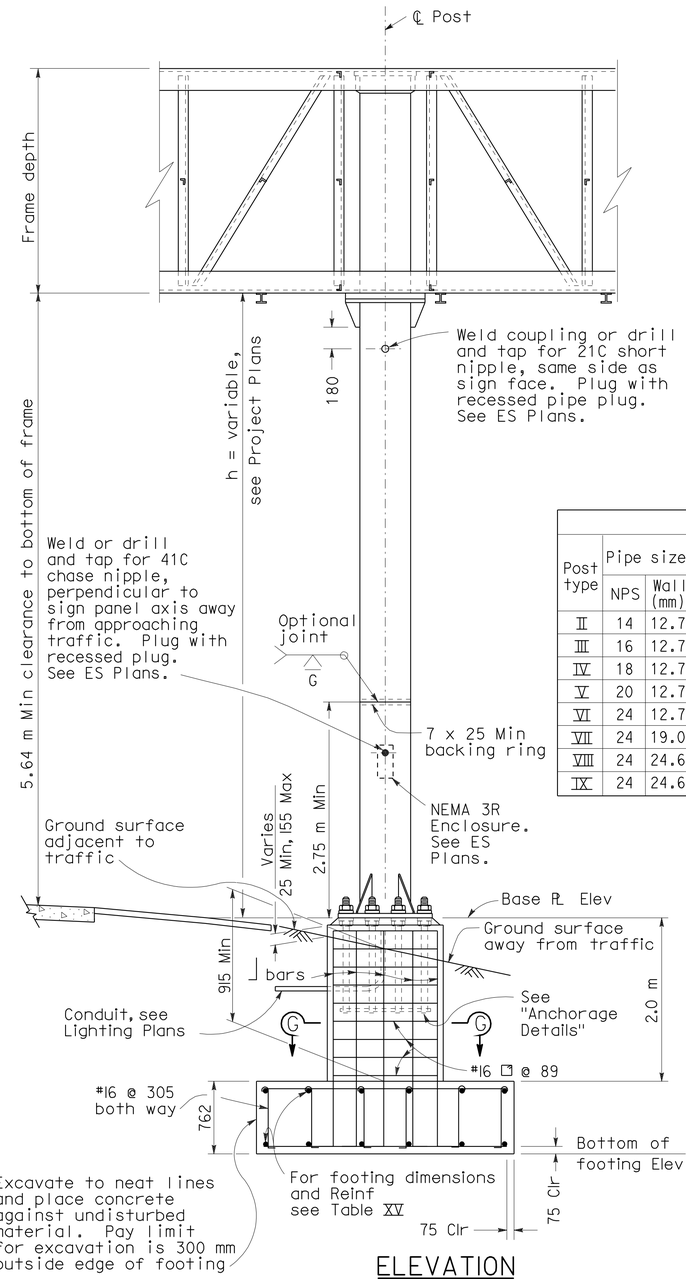

ELEVATION

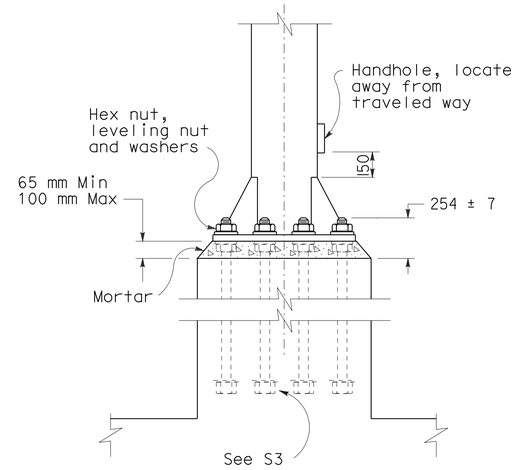

ANCHORAGE DETAILS

TABLE XV

Post type	Pipe size NPS	Pipe size Wall (mm)	Cap Plate for L 127x127 (mm)	Cap Plate for L 152x152 (mm)	Round Pedestal: Pedestal Size Dia (mm)	Round Pedestal: Vertical ⌋-Bars Equally spaced total	Round Pedestal: Vertical ⌋-Bars Bar Size	Round Pedestal: Vertical ⌋-Bars Bar B.C. (mm)	Round Pedestal: Spiral Bar Size	Round Pedestal: Spiral Pitch (mm)	Square Pedestal: Pedestal Size Square (mm)	Square Pedestal: Vertical ⌋-Bars Equally spaced total	Square Pedestal: Vertical ⌋-Bars Bar Size	Square Pedestal: Vertical ⌋-Bars Spacing ea face (mm)	Square Pedestal: Hoop Bar Size	Square Pedestal: Hoop Spacing (mm)	Pile footing Dia (mm)	Pile footing Depth (m)	Alternate: Spread Footing See note 2 (mm)	Alternate: Spread Footing Reinforcement: Width Top	Alternate: Spread Footing Reinforcement: Width Bottom	Alternate: Spread Footing Reinforcement: Longitudinal Top	Alternate: Spread Footing Reinforcement: Longitudinal Bottom	Alternate: Spread Footing Reinforcement: Footing Stirrups
II	14	12.7	610 x 610 x 25	660 x 660 x 25	1600	16	32	1372	16	89	1600	16	32	346	16	89	1372	4.5	3658 x 4267 x 762	14-#19	14-#22	13-#29	13-#29	#16 @ 305
III	16	12.7	660 x 660 x 25	711 x 711 x 25	1600	16	32	1372	16	89	1600	16	32	346	16	89	1372	4.9	3658 x 4267 x 762	15-#19	15-#22	13-#29	13-#29	#16 @ 305
IV	18	12.7	711 x 711 x 25	762 x 762 x 25	1600	16	32	1372	16	89	1600	16	32	346	16	89	1372	5.5	3658 x 4267 x 762	15-#19	15-#22	13-#29	13-#29	#16 @ 305
V	20	12.7	762 x 762 x 25	813 x 813 x 25	1600	16	32	1372	16	89	1600	16	32	346	16	89	1372	5.8	3962 x 4267 x 762	15-#19	15-#22	14-#29	14-#29	#16 @ 305
VI	24	12.7	864 x 864 x 25	914 x 914 x 25	1753	16	36	1534	16	89	1753	16	36	381	16	89	1524	6.7	3962 x 4877 x 762	17-#22	17-#22	14-#29	14-#36	#16 @ 305
VII	24	19.0	864 x 864 x 25	914 x 914 x 25	1753	16	36	1534	16	89	1753	16	36	381	16	89	1524	7.0	3962 x 5182 x 762	18-#22	18-#22	14-#29	14-#36	#16 @ 305
VIII	24	24.6	864 x 864 x 25	914 x 914 x 25	1753	16	36	1534	16	89	1753	16	36	381	16	89	1524	7.6	3962 x 5486 x 762	19-#22	19-#22	14-#29	14-#36	#16 @ 305
IX	24	24.6	864 x 864 x 25	914 x 914 x 25	1753	16	36	1534	16	89	1753	16	36	381	16	89	1524	7.6	3962 x 5486 x 762	19-#22	19-#22	14-#29	14-#36	#16 @ 305

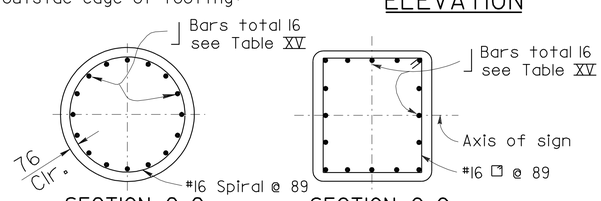

SECTION G-G
ROUND PEDESTAL

SECTION G-G
RECTANGLE PEDESTAL

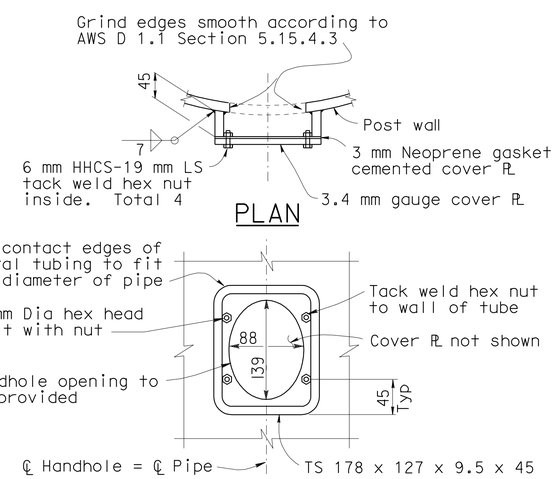

PLAN

ELEVATION

TYPICAL DETAILS OF HANDHOLE AND COVER

Notes:

1. For "General Notes" see Revised Standard Plan RSP S1.
2. Longer side of footing shall be normal to axis of sign.
3. Backfill shall be in place prior to erection of post.
4. Thread upper 254 mm of anchor bolts and galvanize upper 305 mm.
5. Spread footing shown, use Pile Foundation when shown on the Project Plans.
6. Anchor plates may be retained with hexagon nut or formed head as alternatives to details shown.
7. On single post sign structures, the post shall be raked out of plumb, with the use of the leveling nuts to make the bottom of the sign frame level.
8. At final position of post all top and bottom nuts shall be tightened against base plate.
9. When foundation is located on a steep slope with exposed face of concrete adjacent to traffic, see "Detail C" on Revised Standard Plan RSP S7 or RSP S8, as applicable.
10. Slope protection required when indicated on the Project Plans.

STATE OF CALIFORNIA
DEPARTMENT OF TRANSPORTATION

OVERHEAD SIGNS-TRUSS SINGLE POST TYPE POST TYPES II THROUGH IX

NO SCALE

ALL DIMENSIONS ARE IN MILLIMETERS UNLESS OTHERWISE SHOWN

RSP S2 DATED APRIL 28, 2005 SUPERSEDES RSP S2 DATED JANUARY 24,2005 AND STANDARD PLAN S2 DATED JULY 1, 2004-PAGE 311 OF THE STANDARD PLANS BOOK DATED JULY 2004.

REVISED STANDARD PLAN RSP S2

DIST	COUNTY	ROUTE	KILOMETER POST TOTAL PROJECT	SHEET NO.	TOTAL SHEETS
01	Men	101	R69.4/R78.9	578	939

REGISTERED CIVIL ENGINEER

January 24, 2005
PLANS APPROVAL DATE

REGISTERED PROFESSIONAL ENGINEER — Tillat Sattar — No. C42892 — Exp. 03-31-2006 — CIVIL — STATE OF CALIFORNIA

The State of California or its officers or agents shall not be responsible for the accuracy or completeness of electronic copies of this plan sheet.

To get to the Caltrans web site, go to: http://www.dot.ca.gov

To accompany plans dated 1-23-12

Caltrans Metric

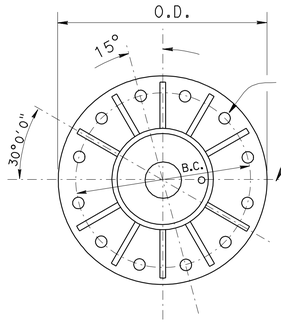

12 BOLTS

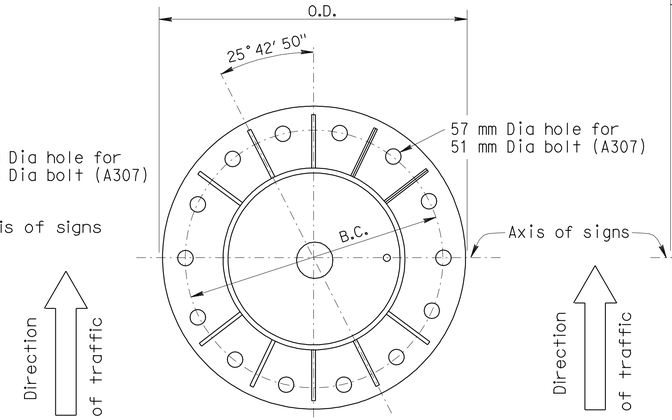

14 BOLTS

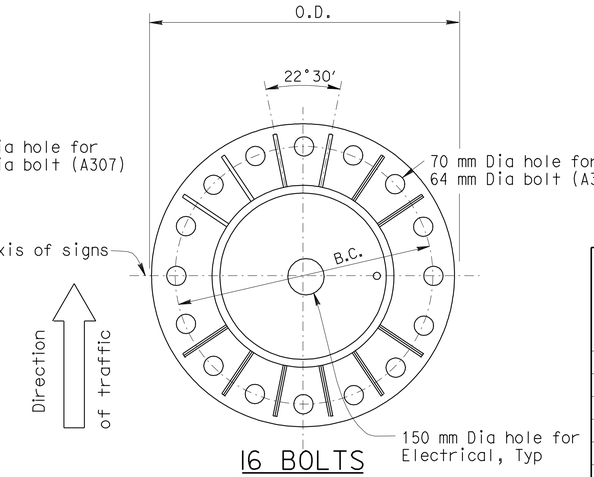

16 BOLTS

SINGLE POST TYPE BASE PLATE DETAILS

Post Type No.	Nominal Pipe Size (NPS)	Pipe Thickness (mm)	Base PL OD & Thickness (mm)	Anchor		CIDH						
				Bolt Circle (mm)	Bolts Total & Dia (mm)	Pile Dia (mm)	Pile Depth (m)	Vertical Reinforcing			Spiral	
								Total	Bar Size	Bar Circle (mm)	Bar Size	Pitch (mm)
II	14	12.7	864 x 51	610	12-51	1372	4.5	26	32	1143	16	89
III	16	12.7	864 x 51	610	12-51	1372	4.9	26	32	1143	16	89
IV	18	12.7	864 x 51	610	12-51	1372	5.5	26	32	1143	16	89
V	20	12.7	1016 x 64	864	14-51	1372	5.8	26	32	1143	16	89
VI	24	12.7	1016 x 64	864	16-64	1524	6.7	28	36	1295	16	89
VII	24	19.0	1016 x 64	864	16-64	1524	7.0	28	36	1295	16	89
VIII	24	24.6	1016 x 89	864	16-64	1524	7.6	28	36	1295	16	89
IX	24	24.6	1016 x 89	864	16-64	1524	7.6	28	36	1295	16	89

SINGLE POST TABLE

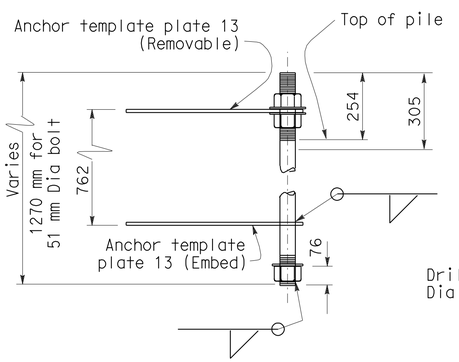

FOR POST II THRU IV
12 BOLTS PATTERN

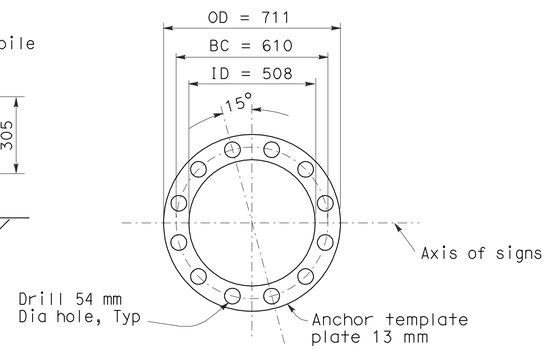

12 BOLTS

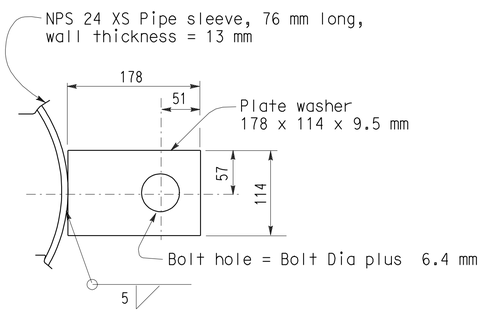

PLATE WASHER FOR
14 &16 BOLT PATTERN

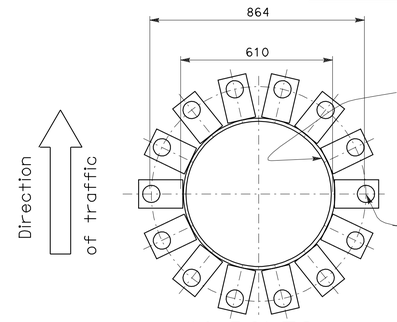

14 BOLTS
ANCHOR BOLT TEMPLATE

Template to match base plate anchor bolt layouts

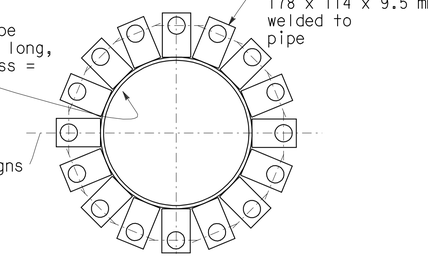

16 BOLTS

(Option: Permanent template similar to ring plate type can be used in lieu of plate washer type).

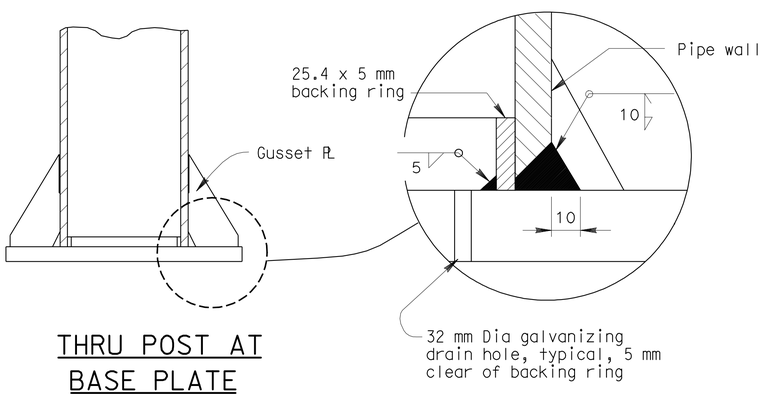

THRU POST AT
BASE PLATE

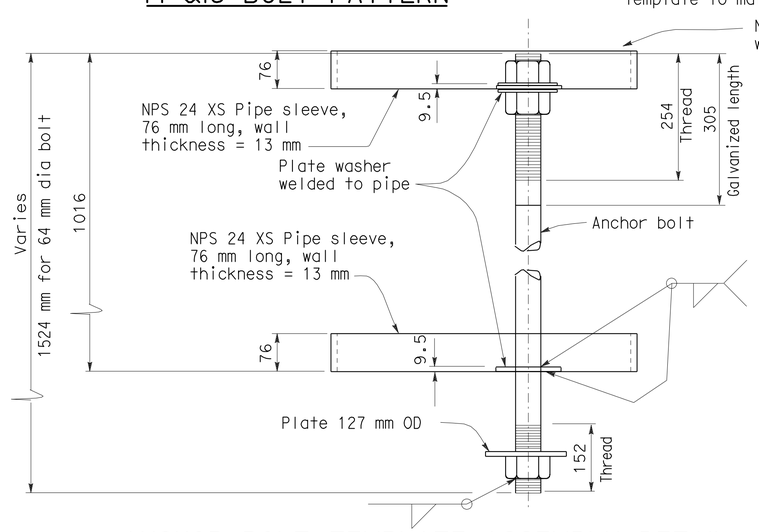

ANCHOR BOLT TEMPLATE ASSEMBLY DETAIL

Note: One bolt shown only. Other bolts not shown.

STATE OF CALIFORNIA
DEPARTMENT OF TRANSPORTATION

OVERHEAD SIGNS-TRUSS SINGLE POST TYPE BASE PLATE AND ANCHORAGE DETAILS

NO SCALE

ALL DIMENSIONS ARE IN
MILLIMETERS UNLESS OTHERWISE SHOWN

RSP S3 DATED JANUARY 24, 2005 SUPERSEDES STANDARD PLAN S3
DATED JULY 1, 2004-PAGE 312 OF THE STANDARD PLANS BOOK DATED JULY 2004.

REVISED STANDARD PLAN RSP S3

2004 REVISED Std PLAN RSP S3

To accompany plans dated 1-23-12

Caltrans Metric

DIST	COUNTY	ROUTE	KILOMETER POST TOTAL PROJECT	SHEET NO.	TOTAL SHEETS
01	Men	101	R69.4/R78.9	579	939

REGISTERED CIVIL ENGINEER

January 24, 2005
PLANS APPROVAL DATE

REGISTERED PROFESSIONAL ENGINEER Tillat Sattar No. C42892 Exp. 03-31-2006 CIVIL STATE OF CALIFORNIA

The State of California or its officers or agents shall not be responsible for the accuracy or completeness of electronic copies of this plan sheet.

To get to the Caltrans web site, go to: http://www.dot.ca.gov

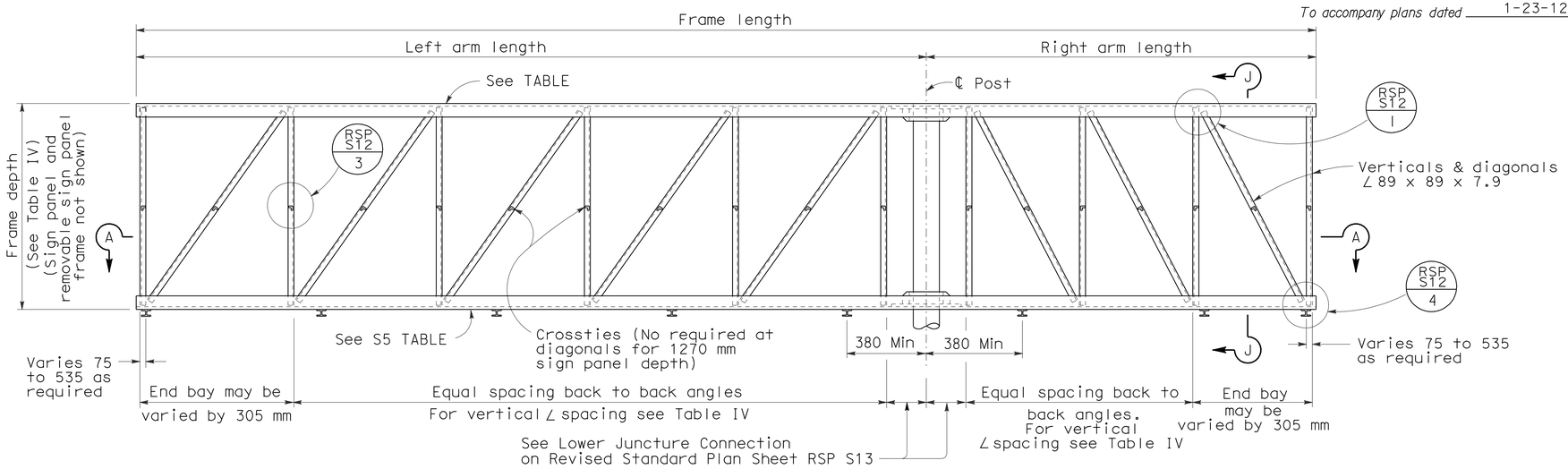

Note:

Left arm may be shorter, longer or equal to right arm length

ELEVATION

TABLE IV

Sign Panel Depth (mm)	Frame Depth (mm)	Maximum Vertical ∠ Spacing (mm)	See Note 6 (mm)
1270	1423	1372	1220
1524	1675	1524	1220
1778	1931	1676	1220
2032	2185	1829	1525
2286	2439	2134	1525
2540	2693	2134	1830
2794	2693	2134	1830
3048	2693	2134	1830

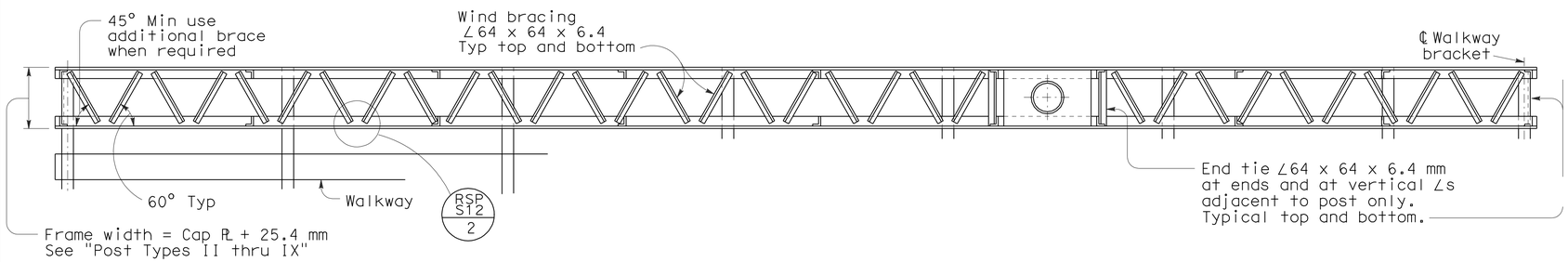

SECTION A-A

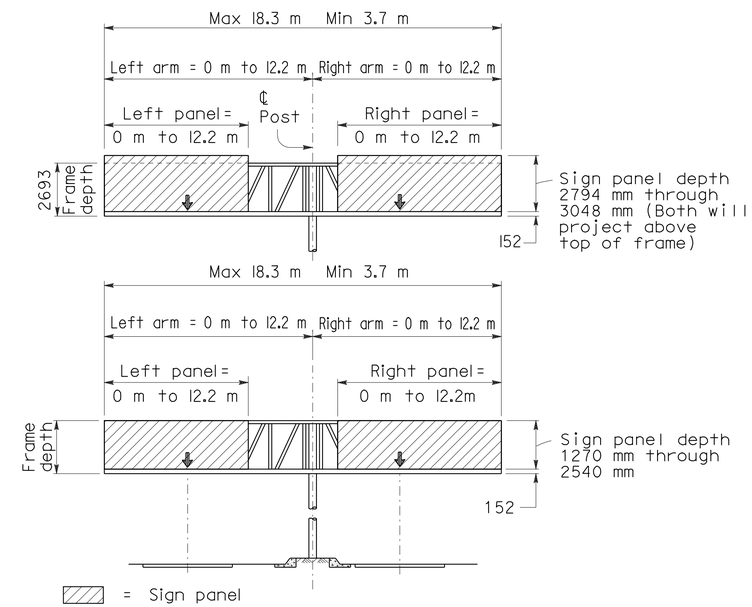

RANGE OF STRUCTURE SIZES

Notes:

1. For connection of frame to post see RSP S13.
2. For walkway see RSP S16 and RSP S17.
3. For walkway length see RSP S1.
4. Minimum length of frame = 3660 mm.
5. Maximum length of frame = 18 290 mm.
6. Diagonal not required if arm length is equal to or less than shown in this column see table IV.

Standard Plan sheet number
Detail number

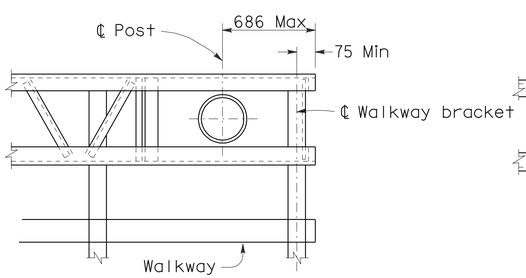

PART PLAN OF CANTILEVER TYPE AT POST

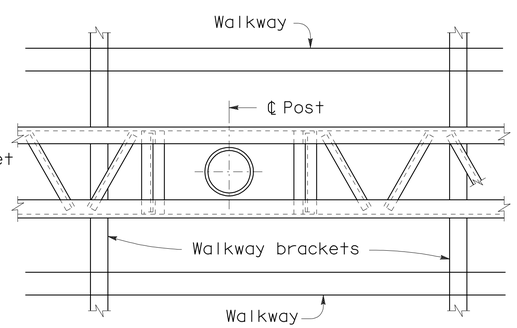

PART PLAN OF DOUBLE FACED TYPE AT POST

STATE OF CALIFORNIA
DEPARTMENT OF TRANSPORTATION

OVERHEAD SIGNS-TRUSS SINGLE POST TYPE STRUCTURAL FRAME MEMBERS DETAILS No.1

NO SCALE

ALL DIMENSIONS ARE IN MILLIMETERS UNLESS OTHERWISE SHOWN

RSP S4 DATED JANUARY 24, 2005 SUPERSEDES STANDARD PLAN S4 DATED JULY 1, 2004-PAGE 313 OF THE STANDARD PLANS BOOK DATED JULY 2004.

REVISED STANDARD PLAN RSP S4

2004 REVISED Std PLAN RSP S4

DIST	COUNTY	ROUTE	KILOMETER POST TOTAL PROJECT	SHEET NO.	TOTAL SHEETS
01	Men	101	R69.4/R78.9	580	939

REGISTERED CIVIL ENGINEER

January 24, 2005
PLANS APPROVAL DATE

REGISTERED PROFESSIONAL ENGINEER
Tillat Sattar
No. C42892
Exp. 03-31-2006
CIVIL
STATE OF CALIFORNIA

The State of California or its officers or agents shall not be responsible for the accuracy or completeness of electronic copies of this plan sheet.

To get to the Caltrans web site, go to: http://www.dot.ca.gov

To accompany plans dated 1-23-12

2004 REVISED Std PLAN RSP S6

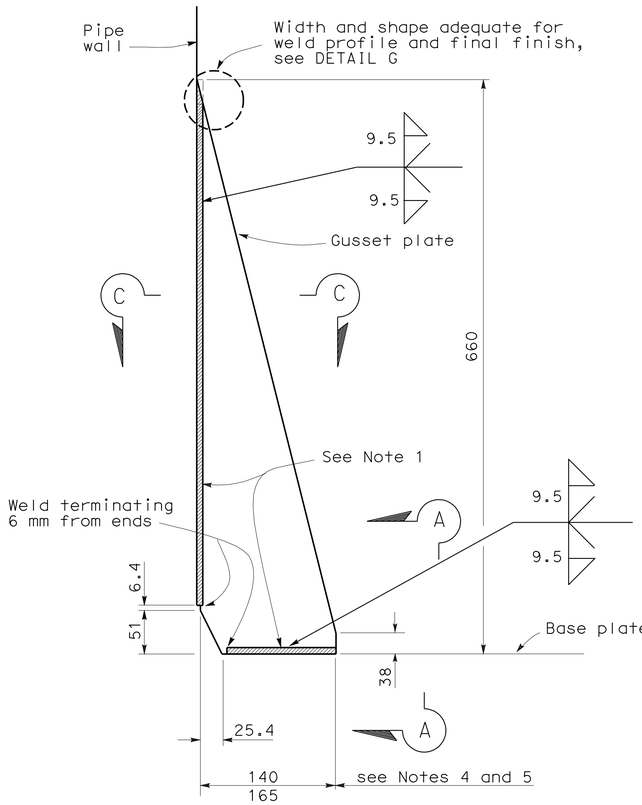

WELD DETAILS

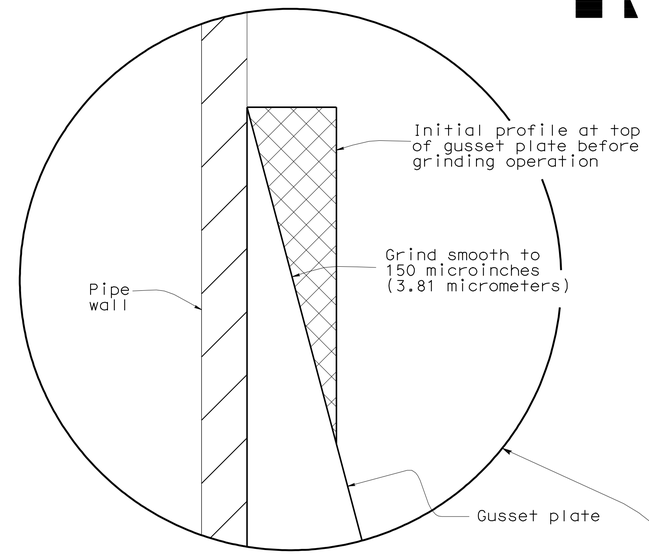

DETAIL G

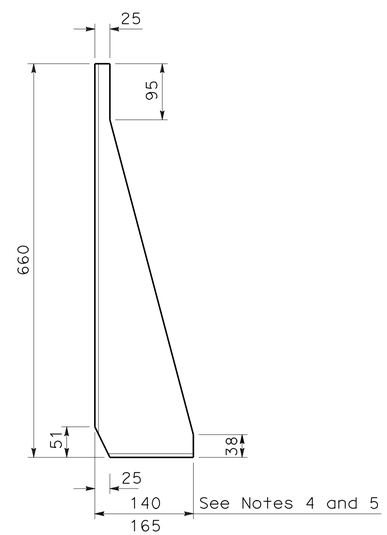

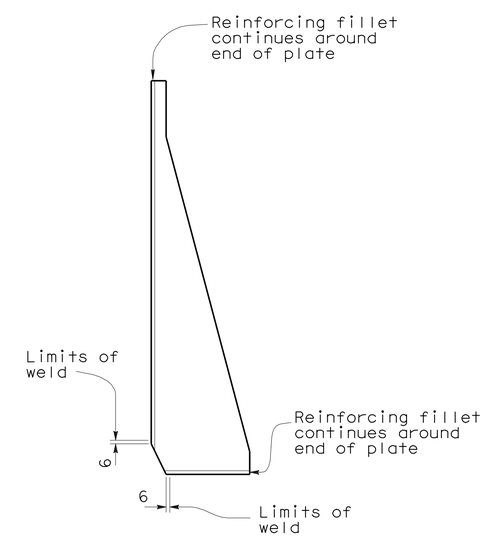

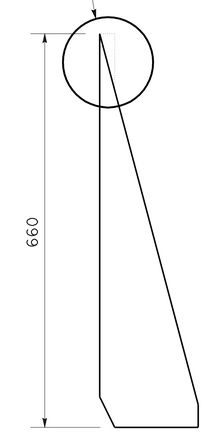

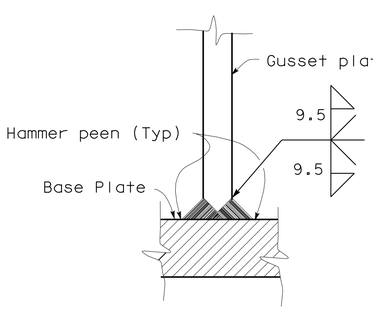

SECTION A-A

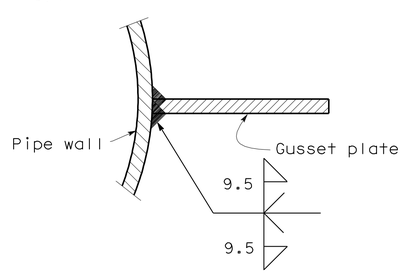

SECTION C-C

NOTES

1. All welding details shall conform to the requirements of AWS D1.1 and special provisions.
2. All gussets to be same height.
3. Provide a smooth transition from gusset plate to tube.
4. 140 mm for post Types I-S through V-S and single post with 12 and 14 bolts pattern.
5. 165 mm for post Type VI-S and VII-S and single post with 16 bolts pattern.

STATE OF CALIFORNIA
DEPARTMENT OF TRANSPORTATION

OVERHEAD SIGNS-TRUSS GUSSET PLATE DETAILS

NO SCALE

ALL DIMENSIONS ARE IN MILLIMETERS UNLESS OTHERWISE SHOWN

RSP S6 DATED JANUARY 24, 2005 SUPERSEDES STANDARD PLAN S6 DATED JULY 1, 2004-PAGE 315 OF THE STANDARD PLANS BOOK DATED JULY 2004.

REVISED STANDARD PLAN RSP S6

DIST	COUNTY	ROUTE	KILOMETER POST TOTAL PROJECT	SHEET NO.	TOTAL SHEETS
01	Men	101	R69.4/R78.9	581	939

Caltrans Metric

REGISTERED CIVIL ENGINEER

January 24, 2005
PLANS APPROVAL DATE

REGISTERED PROFESSIONAL ENGINEER
Tillat Sattar
No. C42892
Exp. 03-31-2006
CIVIL
STATE OF CALIFORNIA

The State of California or its officers or agents shall not be responsible for the accuracy or completeness of electronic copies of this plan sheet.

To get to the Caltrans web site, go to: http://www.dot.ca.gov

To accompany plans dated 1-23-12

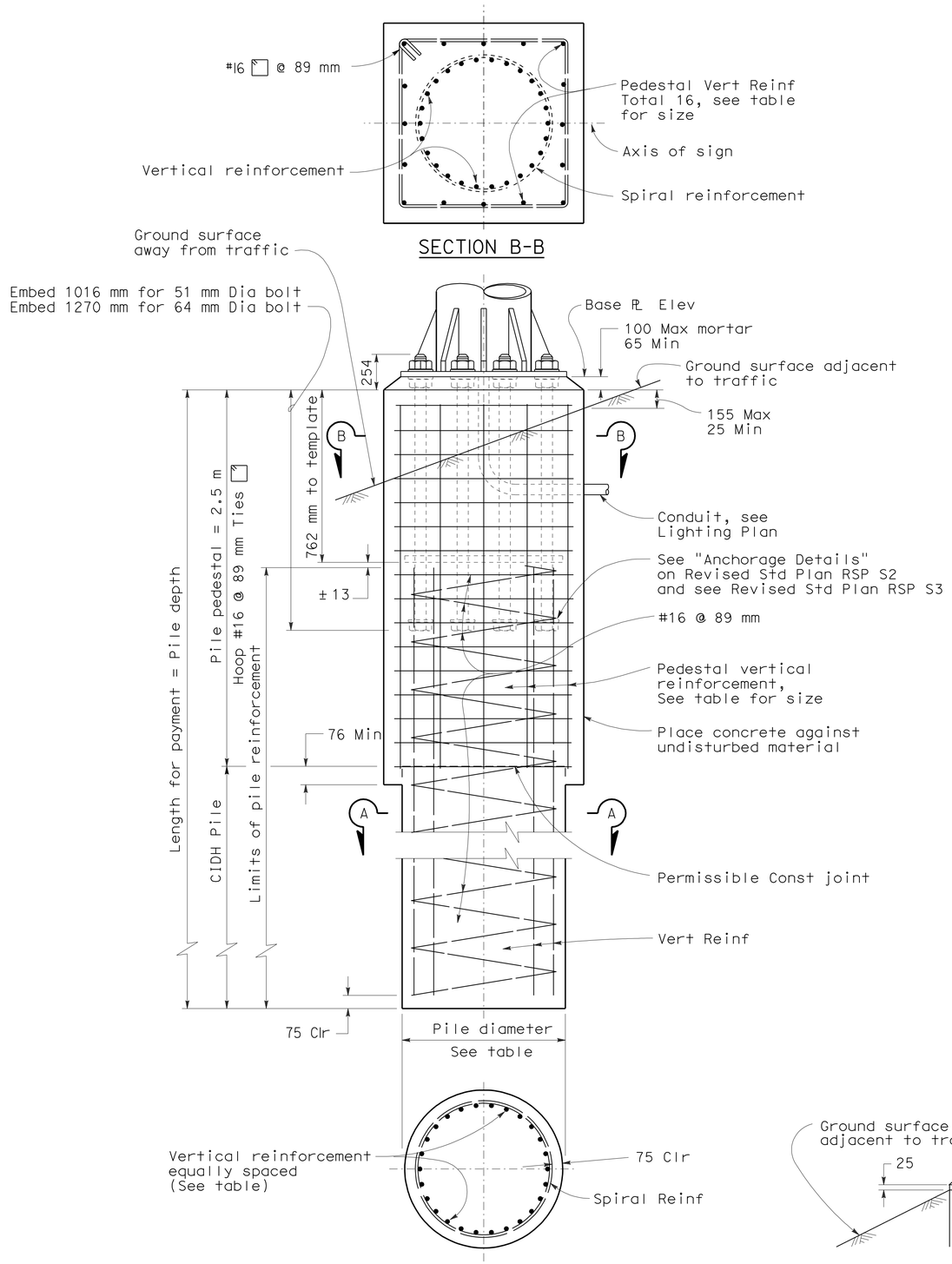

Post Type No.	Anchor Bolts			Square Pedestal						CIDH						
	Bolt Circle (mm)	Bolts Total & Dia (mm)	Total Length (mm)	Pedestal Square one side (mm)	Reinforcing			Hoop		Pile Dia (mm)	✱✱ Pile Depth (m)	Vertical Reinforcing			Spiral	
					Total	Bar Size	# of bars each face	Bar Size	Pitch (mm)			Total	Bar Size	Bar Circle (mm)	Bar Size	Pitch (mm)
II	610	12-51	1270	1600	16	#32	5	#16	89	1372	4.5	26	#32	1143	#16	89
III	610	12-51	1270	1600	16	#32	5	#16	89	1372	4.9	26	#32	1143	#16	89
IV	610	12-51	1270	1600	16	#32	5	#16	89	1372	5.5	26	#32	1143	#16	89
V	864	14-51	1270	1600	16	#32	5	#16	89	1372	5.8	26	#32	1143	#16	89
VI	864	16-64	1524	1753	16	#36	5	#16	89	1524	6.7	28	#36	1295	#16	89
VII	864	16-64	1524	1753	16	#36	5	#16	89	1524	7.0	28	#36	1295	#16	89
VIII	864	16-64	1524	1753	16	#36	5	#16	89	1524	7.6	28	#36	1295	#16	89
IX	864	16-64	1524	1753	16	#36	5	#16	89	1524	7.6	28	#36	1295	#16	89

✱✱ Use Foundation Depth shown in table unless otherwise shown on the Project Plans.

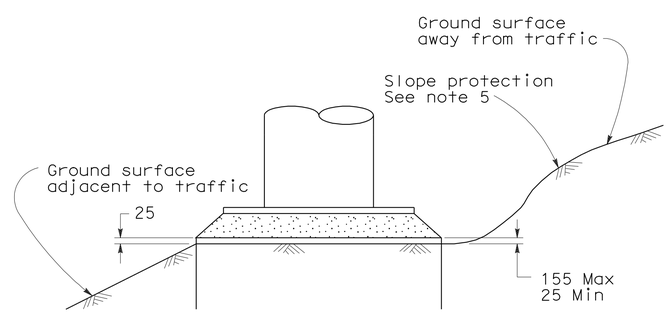

NOTES

1. For anchor bolt layout see post sheet.
2. For "Base ℙ elevation" see Project Plans.
3. Prior to erection of the post, backfill which is equivalent to the surrounding material shall be in place.
4. Pedestal shall be formed 150 mm minimum below ground surface Remainder to be placed against undisturbed material.
5. Slope protection required when indicated on the Project Plans.
6. Foundation design is based on 2001 AASHTO article 13.6 Broms' approximate procedure assuming a cohesionless material. The angle of internal friction used is 30 degree and unit weight of soil used is 1922 kg/m³.

STATE OF CALIFORNIA
DEPARTMENT OF TRANSPORTATION

OVERHEAD SIGNS-TRUSS SINGLE POST TYPE SQUARE PEDESTAL PILE FOUNDATION

NO SCALE

ALL DIMENSIONS ARE IN MILLIMETERS UNLESS OTHERWISE SHOWN

RSP S7 DATED JANUARY 24, 2005 SUPERSEDES STANDARD PLAN S7 DATED JULY 1, 2004-PAGE 316 OF THE STANDARD PLANS BOOK DATED JULY 2004.

REVISED STANDARD PLAN RSP S7

2004 REVISED Std PLAN RSP S7

DIST	COUNTY	ROUTE	KILOMETER POST TOTAL PROJECT	SHEET NO.	TOTAL SHEETS
01	Men	101	R69.4/R78.9	582	939

Caltrans Metric

REGISTERED CIVIL ENGINEER

January 24, 2005
PLANS APPROVAL DATE

REGISTERED PROFESSIONAL ENGINEER
Tillat Sattar
No. C42892
Exp. 03-31-2006
CIVIL
STATE OF CALIFORNIA

The State of California or its officers or agents shall not be responsible for the accuracy or completeness of electronic copies of this plan sheet.

To get to the Caltrans web site, go to: http://www.dot.ca.gov

To accompany plans dated 1-23-12

2004 REVISED Std PLAN RSP S8

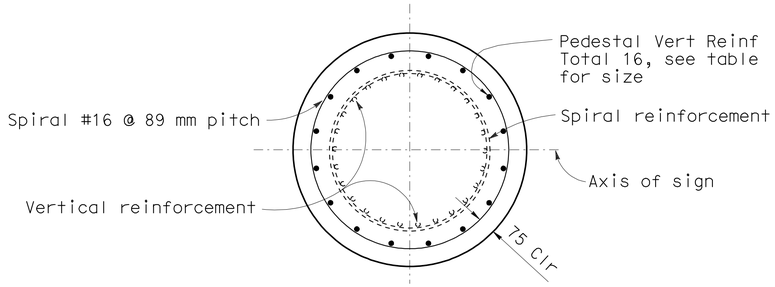

SECTION B-B

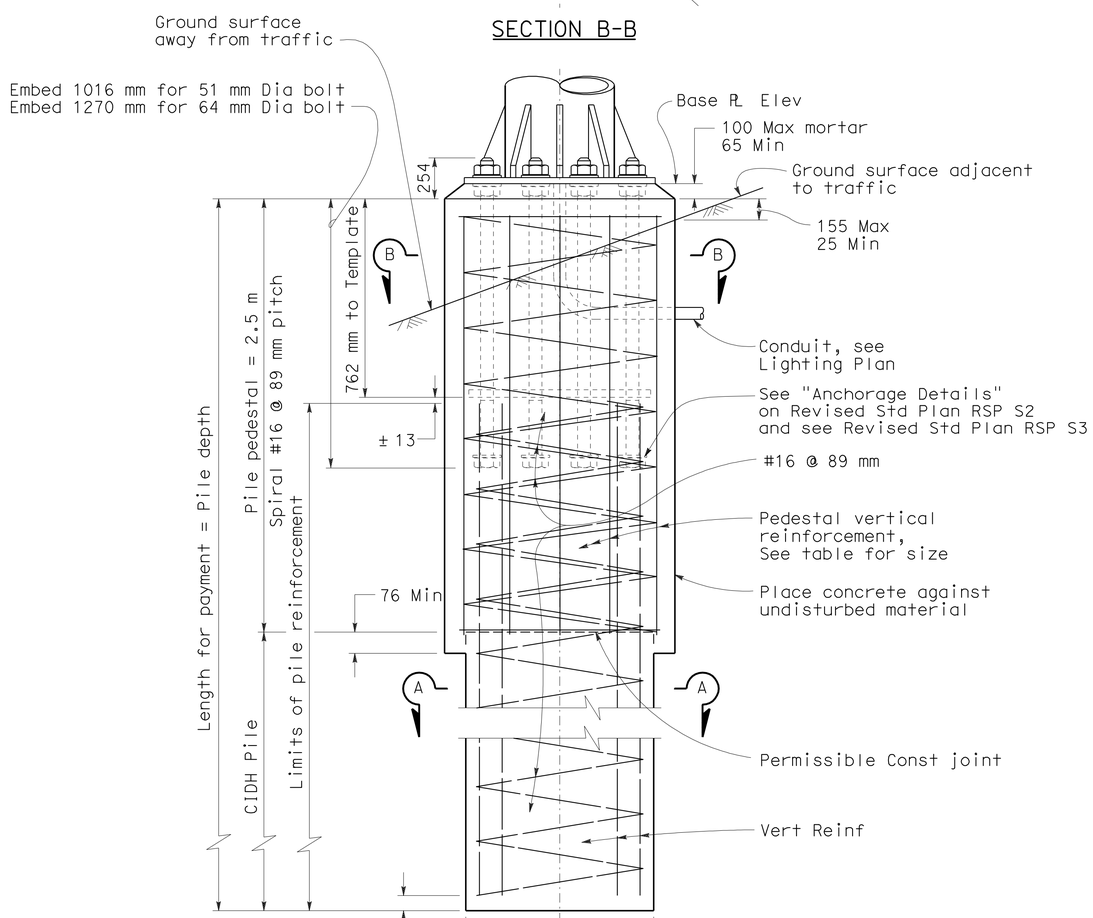

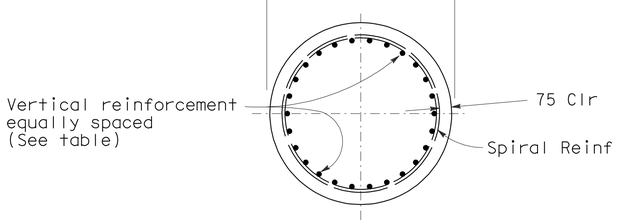

SECTION A-A

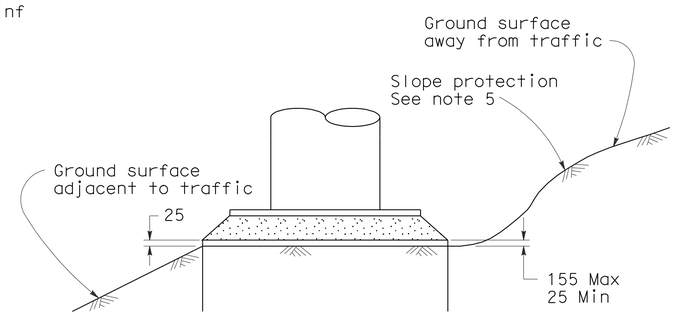

DETAIL C

Post Type No.	Anchor Bolts			Round Pedestal						CIDH						
					Reinforcing			Spiral			**	Vertical Reinforcing			Spiral	
	Bolt Circle (mm)	Bolts Total & Dia (mm)	Total Length (mm)	Dia (mm)	Total	Bar Size	Loop Circle (mm)	Bar Size	Pitch (mm)	Pile Dia (mm)	Pile Depth (m)	Total	Bar Size	Bar Circle (mm)	Bar Size	Pitch (mm)
II	610	12-51	1270	1600	16	#32	1435	#16	89	1372	4.5	26	#32	1143	#16	89
III	610	12-51	1270	1600	16	#32	1435	#16	89	1372	4.9	26	#32	1143	#16	89
IV	610	12-51	1270	1600	16	#32	1435	#16	89	1372	5.5	26	#32	1143	#16	89
V	864	14-51	1270	1600	16	#32	1435	#16	89	1372	5.8	26	#32	1143	#16	89
VI	864	16-64	1524	1753	16	#36	1581	#16	89	1524	6.7	28	#36	1295	#16	89
VII	864	16-64	1524	1753	16	#36	1581	#16	89	1524	7.0	28	#36	1295	#16	89
VIII	864	16-64	1524	1753	16	#36	1581	#16	89	1524	7.6	28	#36	1295	#16	89
IX	864	16-64	1524	1753	16	#36	1581	#16	89	1524	7.6	28	#36	1295	#16	89

** Use Foundation Depth shown in table unless otherwise shown on the Project Plans.

NOTES

1. For anchor bolt layout see post sheet.
2. For "Base ℞ elevation" see Project Plans.
3. Prior to erection of the post, backfill which is equivalent to the surrounding material shall be in place.
4. Pedestal shall be formed 150 mm minimum below ground surface Remainder to be placed against undisturbed material.
5. Slope protection required when indicated on the Project Plans.
6. Foundation design is based on 2001 AASHTO article 13.6 Broms' approximate procedure assuming a cohesionless material. The angle of internal friction used is 30 degree and unit weight of soil used is 1922 kg/m^3.

STATE OF CALIFORNIA
DEPARTMENT OF TRANSPORTATION

OVERHEAD SIGNS-TRUSS SINGLE POST TYPE ROUND PEDESTAL PILE FOUNDATION

NO SCALE

ALL DIMENSIONS ARE IN MILLIMETERS UNLESS OTHERWISE SHOWN

RSP S8 DATED JANUARY 24, 2005 SUPERSEDES STANDARD PLAN S8 DATED JULY 1, 2004-PAGE 317 OF THE STANDARD PLANS BOOK DATED JULY 2004.

REVISED STANDARD PLAN RSP S8

DIST	COUNTY	ROUTE	KILOMETER POST TOTAL PROJECT	SHEET NO.	TOTAL SHEETS
01	Men	101	R69.4/R78.9	583	939

REGISTERED CIVIL ENGINEER

January 24, 2005
PLANS APPROVAL DATE

REGISTERED PROFESSIONAL ENGINEER Tillat Sattar No. C42892 Exp. 03-31-2006 CIVIL STATE OF CALIFORNIA

The State of California or its officers or agents shall not be responsible for the accuracy or completeness of electronic copies of this plan sheet.

To get to the Caltrans web site, go to: http://www.dot.ca.gov

Caltrans Metric

To accompany plans dated 1-23-12

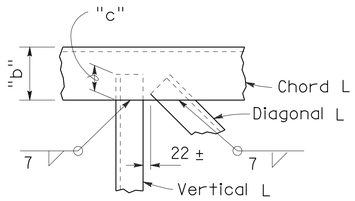

DETAIL ①

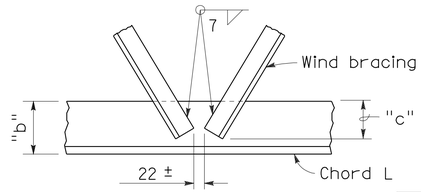

DETAIL ②

OVERLAP DISTANCES

"b"	"c"
89	57
102	70
127	83
152	102
203	127

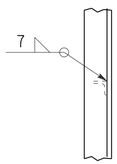

DETAIL ③

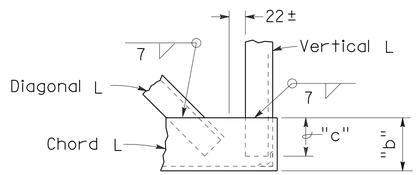

DETAIL ④

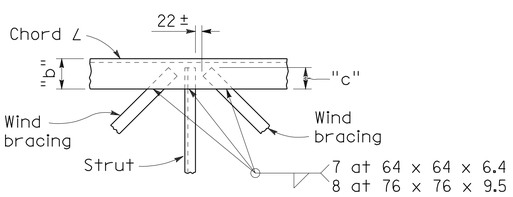

DETAIL ⑤

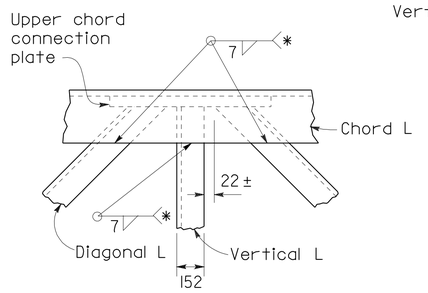

DETAIL ⑥

* Welds are to upper chord connection plate and chord angle

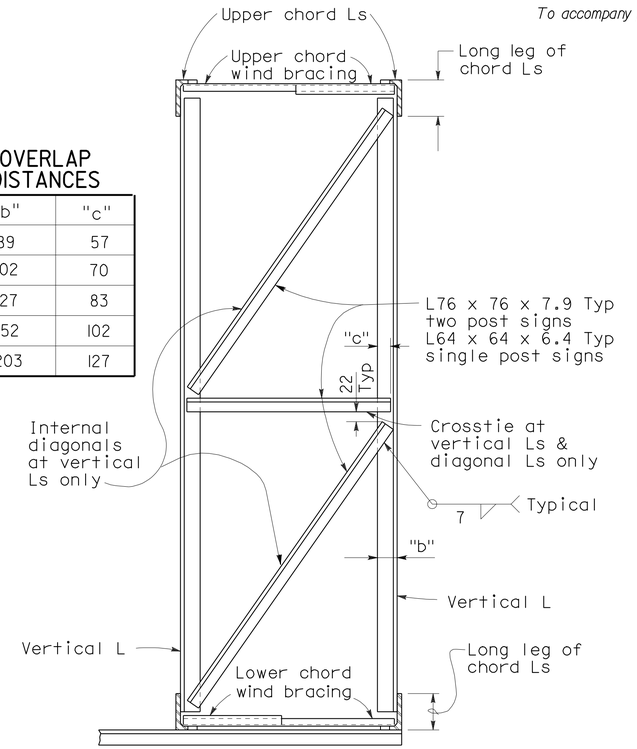

TYPICAL SECTION J-J

Note:

Diagonal Ls in plane of truss not shown. Bracing shown is at all vertical Ls of truss.

BOLTED CHORD SPLICE

TWO POST SIGNS		
Chord ∠	Nominal Bolt Diameter	"a" mm Min
127 x 89 x 9.5	M20 x 2.5	64
152 x 102 x 12.7	M22 x 2.5	76
203 x 102 x 19.0	M30 x 3.5	96
203 x 152 x 19.0	M30 x 3.5	96
SINGLE POST SIGNS		
Chord ∠	Nominal Bolt Diameter	"a" mm Min
127 x 127 x 12.7	M22 x 2.5	76
152 x 152 x 12.7	M22 x 2.5	76

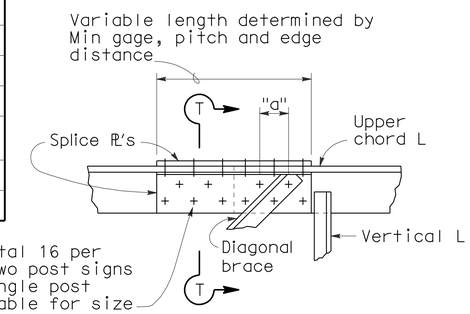

SPLICE WITH DIAGONAL ANGLE

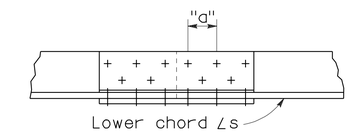

SPLICE WITHOUT DIAGONAL ANGLE

BOLTED CHORD SPLICE

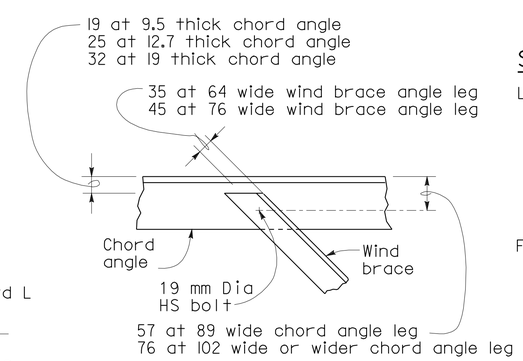

BOLTED WIND BRACE DETAIL

Each end of wind brace at bolted chord splice

SPLICE NOTES

Location of Splices:

The splice shall be located so as not to interfere with mounting the walkway brackets or the clip angles for the removable sign panel frame. For two post type see also S11.

Filler PL :

The plates welded to the angle legs on the inside shall be welded before drilling the bolt holes. The plates shall be the same length as the cover plates. The plates are not necessary on the single post signs if the splice is located over 1/3 of the cantilever length from the post. Alternative splice details may be used if approved by the Engineer.

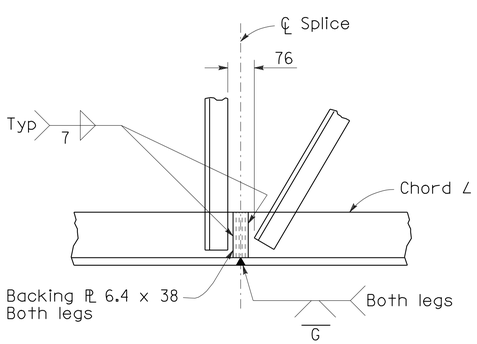

WELDED CHORD SPLICE

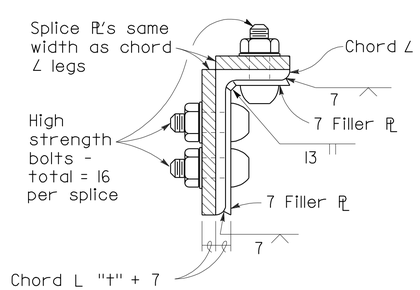

SECTION T-T
TWO POST SIGNS

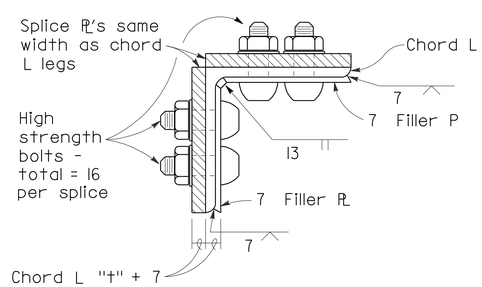

SECTION T-T
SINGLE POST SIGNS

STATE OF CALIFORNIA
DEPARTMENT OF TRANSPORTATION

OVERHEAD SIGNS-TRUSS STRUCTURAL FRAME DETAILS

NO SCALE

ALL DIMENSIONS ARE IN MILLIMETERS UNLESS OTHERWISE SHOWN

RSP S12 DATED JANUARY 24, 2005 SUPERSEDES STANDARD PLAN S12 DATED JULY 1, 2004-PAGE 321 OF THE STANDARD PLANS BOOK DATED JULY 2004.

REVISED STANDARD PLAN RSP S12

2004 REVISED Std PLAN RSP S12

DIST	COUNTY	ROUTE	KILOMETER POST TOTAL PROJECT	SHEET NO.	TOTAL SHEETS
01	Men	101	R69.4/R78.9	584	939

REGISTERED CIVIL ENGINEER

January 24, 2005
PLANS APPROVAL DATE

Tillat Sattar
No. C42892
Exp. 03-31-2006
CIVIL
REGISTERED PROFESSIONAL ENGINEER
STATE OF CALIFORNIA

The State of California or its officers or agents shall not be responsible for the accuracy or completeness of electronic copies of this plan sheet.

To get to the Caltrans web site, go to: http://www.dot.ca.gov

To accompany plans dated 1-23-12

Notes:

1. Post not shown.
2. Photoelectric unit and 3-prong, EEI-NEMA standard, twist lock plug reception.

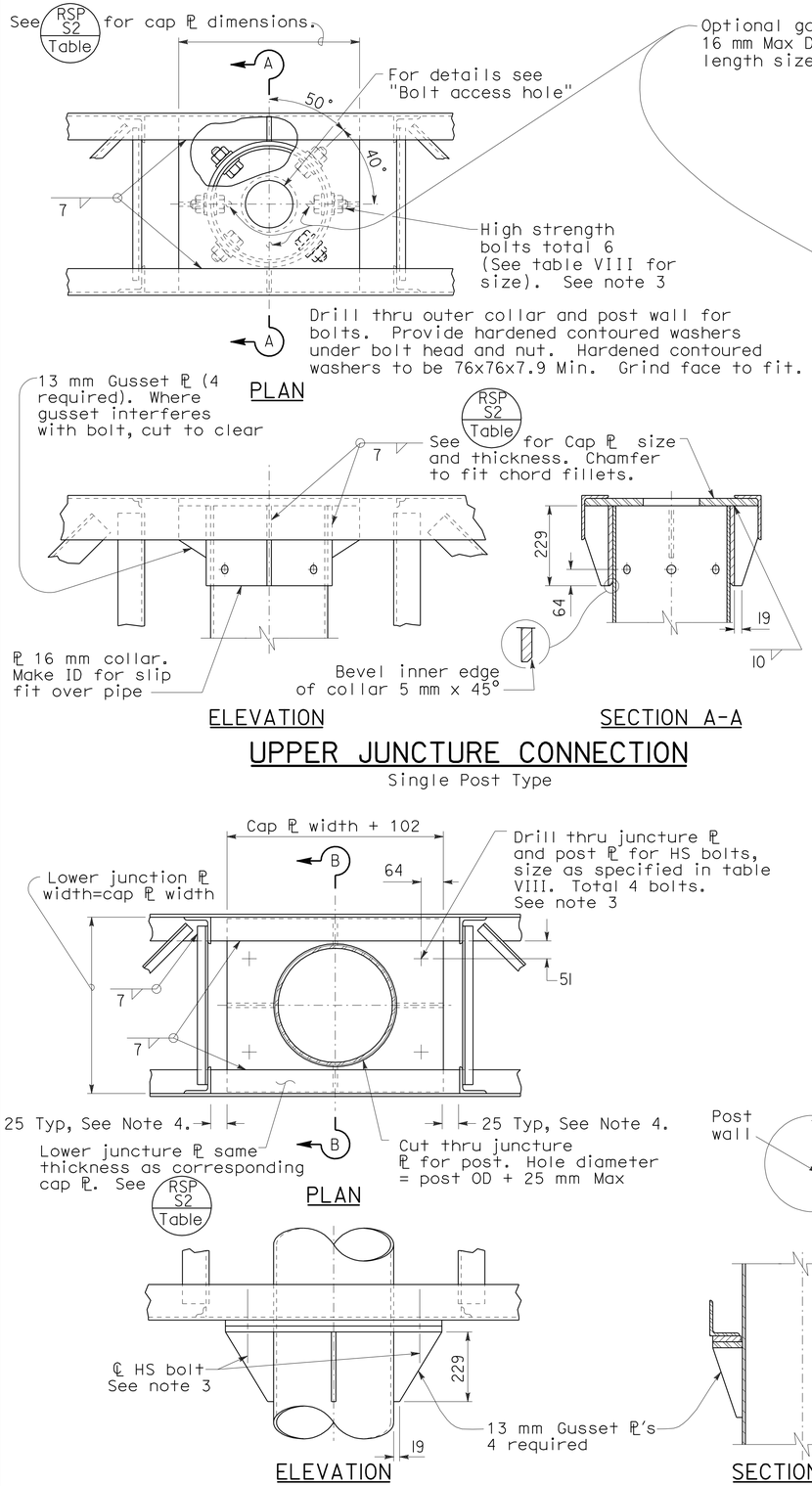

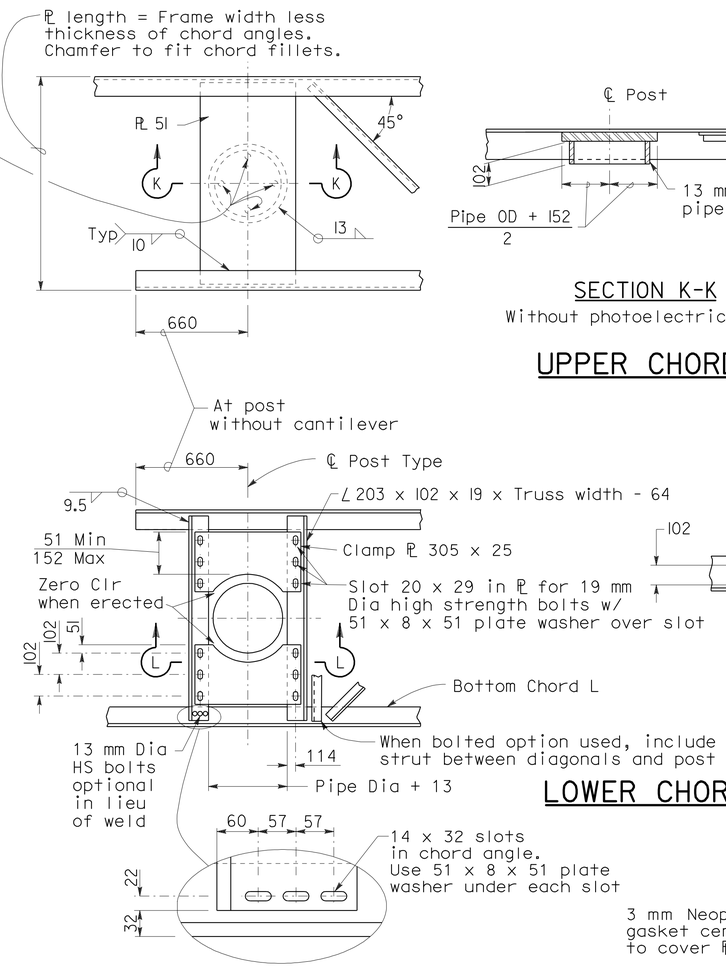

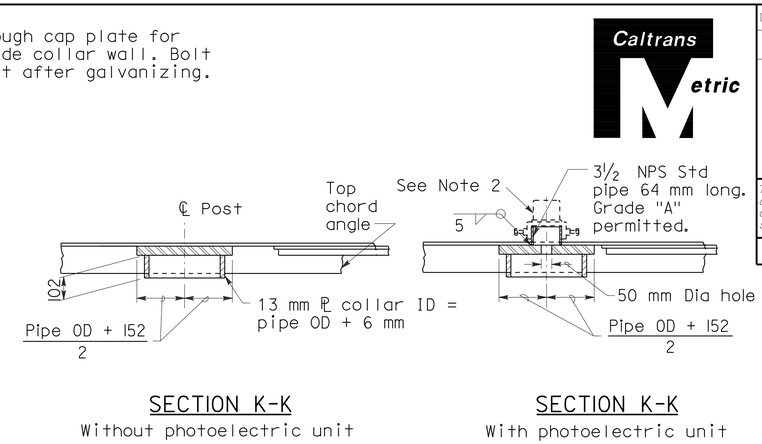

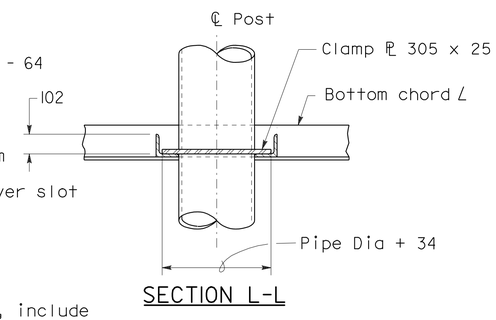

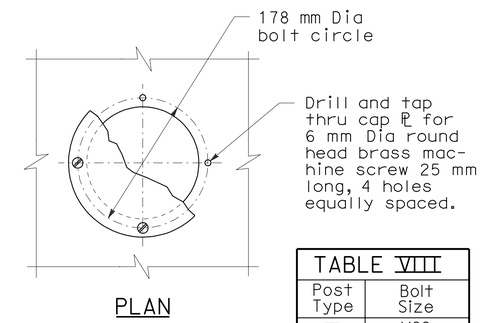

TABLE VIII	
Post Type	Bolt Size
II	M22
III	M24
IV	M27
V	M27
VI	M30
VII	M30
VIII	M36
IX	M36

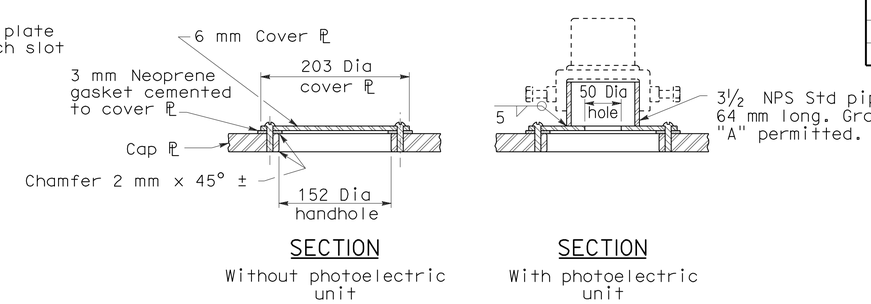

Notes: (Single Post Type)

1. In all cases, truss shall be supported at lower juncture connection. Bearing surface shall be finished true.
2. Post to truss connections shall be fitted in shop.
3. High strength bolts shall be snug tighten. Torque requirements are waived.
4. See Part Plan of Cantilever Type at post on Revised Standard Plan RSP S4.

STATE OF CALIFORNIA
DEPARTMENT OF TRANSPORTATION

OVERHEAD SIGNS-TRUSS FRAME JUNCTURE DETAILS

NO SCALE

ALL DIMENSIONS ARE IN MILLIMETERS UNLESS OTHERWISE SHOWN

RSP S13 DATED JANUARY 24, 2005 SUPERSEDES STANDARD PLAN S13 DATED JULY 1, 2004-PAGE 322 OF THE STANDARD PLANS BOOK DATED JULY 2004.

REVISED STANDARD PLAN RSP S13

2004 REVISED Std PLAN RSP S13

DIST	COUNTY	ROUTE	KILOMETER POST TOTAL PROJECT	SHEET NO.	TOTAL SHEETS
01	Men	101	R69.4/R78.9	585	939

REGISTERED CIVIL ENGINEER

April 28, 2005
PLANS APPROVAL DATE

REGISTERED PROFESSIONAL ENGINEER
Tillat Sattar
No. C42892
Exp. 03-31-2006
CIVIL
STATE OF CALIFORNIA

The State of California or its officers or agents shall not be responsible for the accuracy or completeness of electronic copies of this plan sheet.

To get to the Caltrans web site, go to: http://www.dot.ca.gov

Caltrans Metric

To accompany plans dated 1-23-12

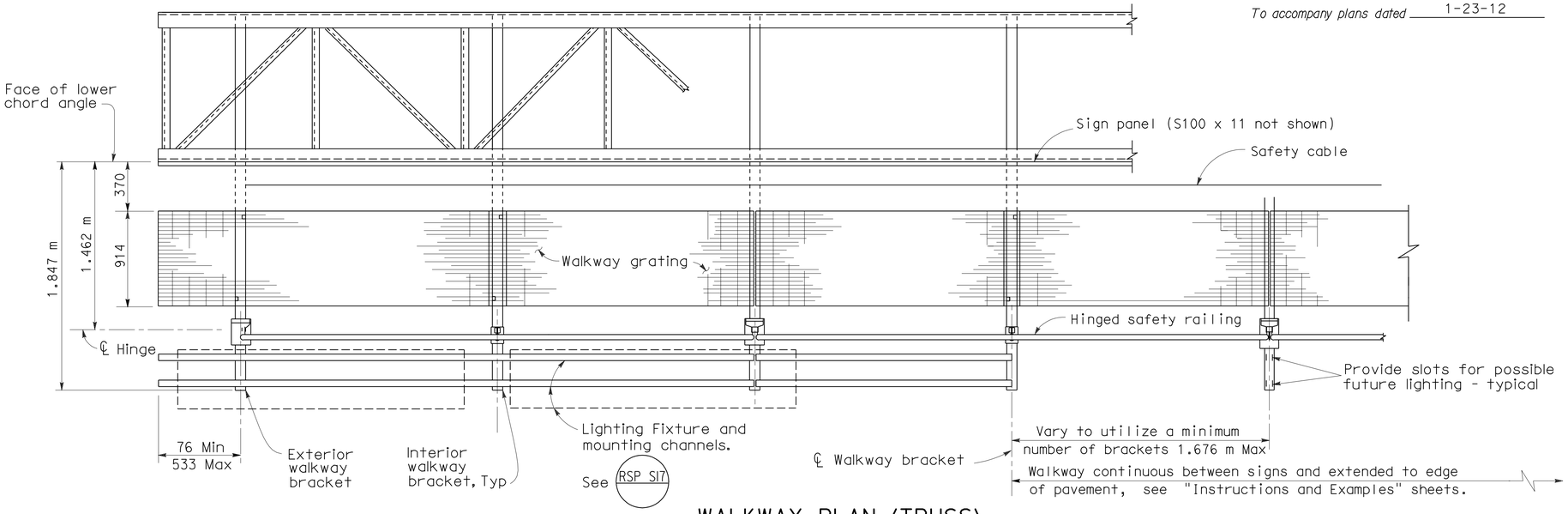

WALKWAY PLAN (TRUSS)

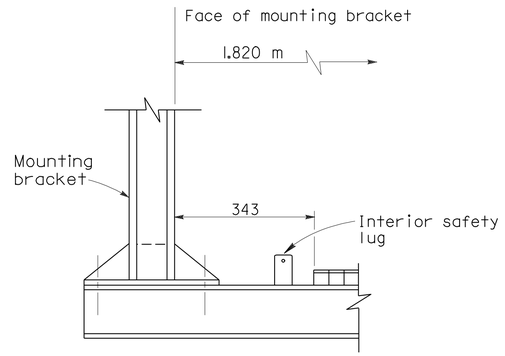

TUBULAR MOUNTED

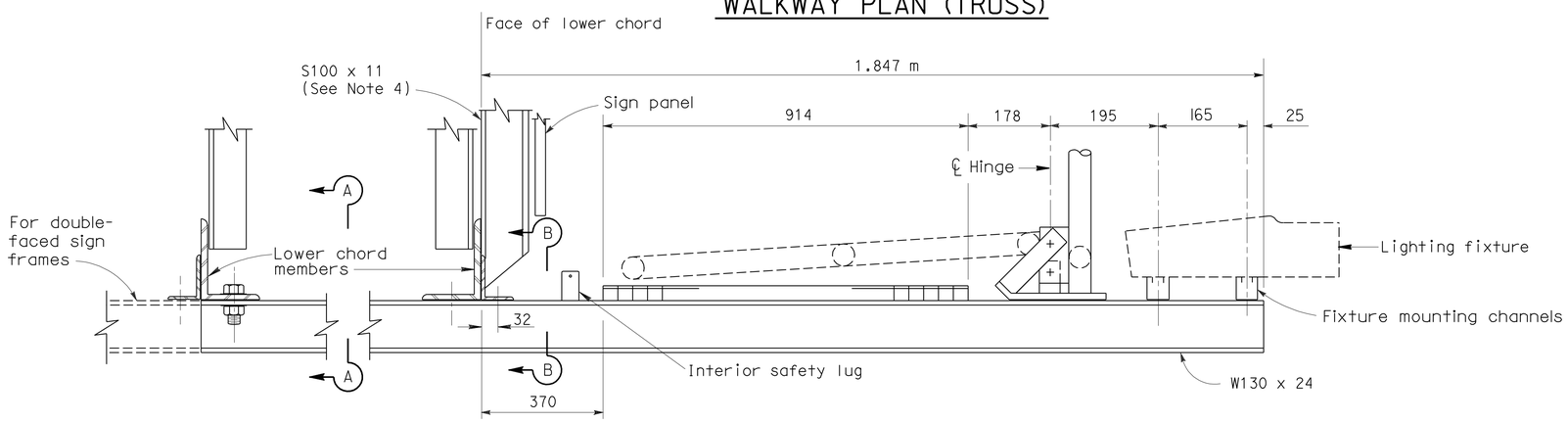

TRUSS

TYPICAL WALKWAY SECTION

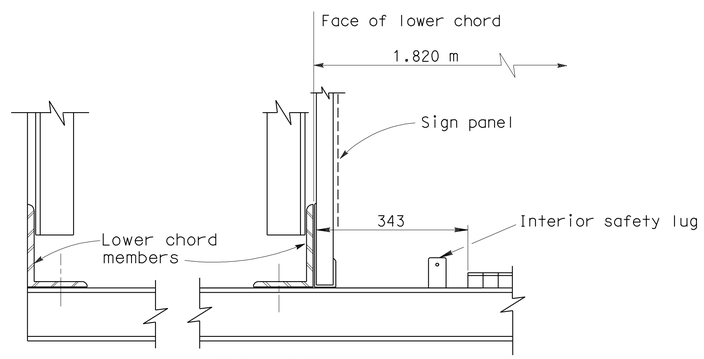

BOX BEAM
CLOSED TRUSS

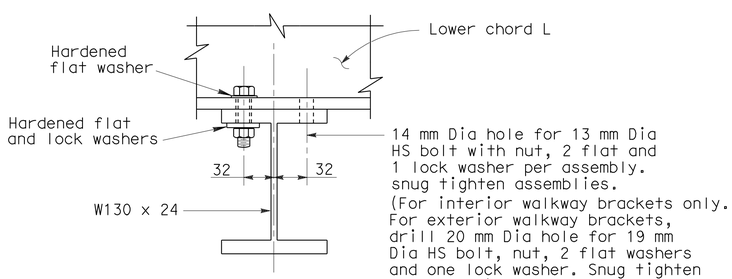

SECTION A-A

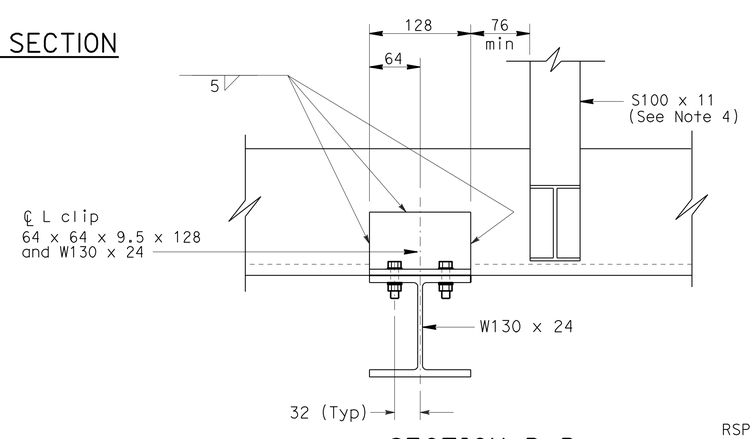

SECTION B-B

NOTES:

1. For spacing of lighting fixtures, see Standard Plan ES-15A.
2. For safety lug details, see Revised Standard Plan RSP S17.
3. For double faced sign frames with double walkways, use a total 8 bolt assemblies per bracket.
4. S100 x 11 to be used with laminated Type A panels. See Revised Standard Plan RSP S19.

STATE OF CALIFORNIA
DEPARTMENT OF TRANSPORTATION

OVERHEAD SIGNS
WALKWAY DETAILS No.1

NO SCALE

ALL DIMENSIONS ARE IN MILLIMETERS UNLESS OTHERWISE SHOWN

RSP S16 DATED APRIL 28, 2005 SUPERSEDES RSP S16 DATED JANUARY 24,2005 AND STANDARD PLAN S16 DATED JULY 1, 2004-PAGE 325 OF THE STANDARD PLANS BOOK DATED JULY 2004.

REVISED STANDARD PLAN RSP S16

2004 REVISED Std PLAN RSP S16

DIST	COUNTY	ROUTE	KILOMETER POST TOTAL PROJECT	SHEET NO.	TOTAL SHEETS
01	Men	101	R69.4/R78.9	586	939

Caltrans Metric

REGISTERED CIVIL ENGINEER

January 24, 2005
PLANS APPROVAL DATE

REGISTERED PROFESSIONAL ENGINEER Tillat Sattar No. C42892 Exp. 03-31-2006 CIVIL STATE OF CALIFORNIA

The State of California or its officers or agents shall not be responsible for the accuracy or completeness of electronic copies of this plan sheet.

To get to the Caltrans web site, go to: http://www.dot.ca.gov

To accompany plans dated 1-23-12

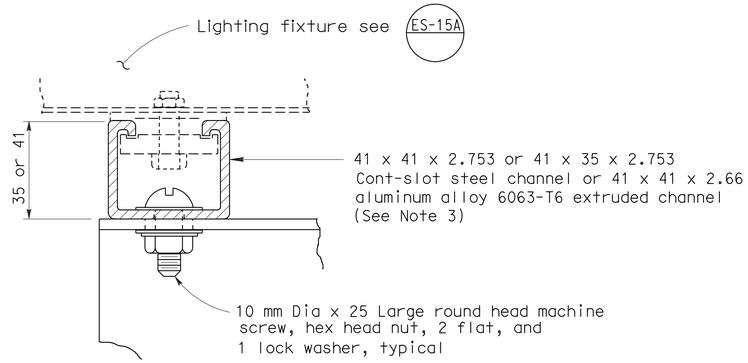

LIGHTING FIXTURE MOUNTING CHANNEL DETAILS 1

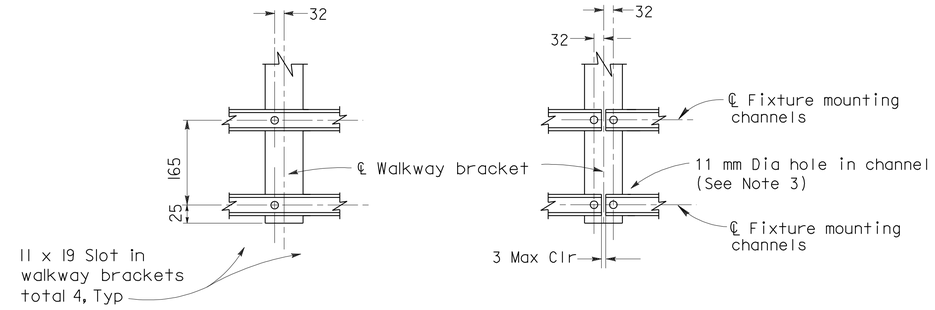

TYPICAL CONNECTION CONNECTION AT SPLICE

LIGHTING FIXTURE MOUNTING CHANNEL DETAILS 2

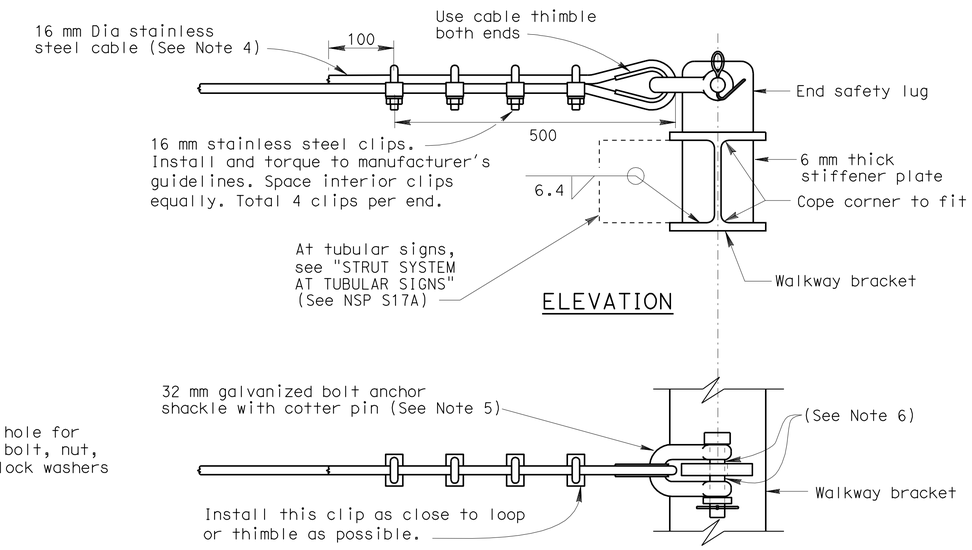

END SAFETY CABLE

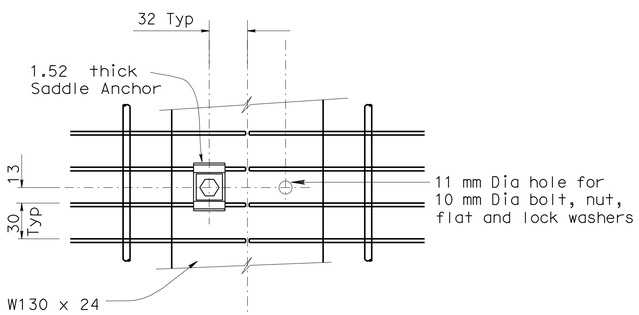

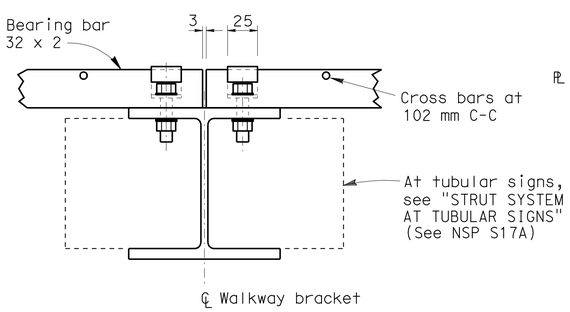

SECTION A-A

WALKWAY GRATING DETAILS

Shown at splice

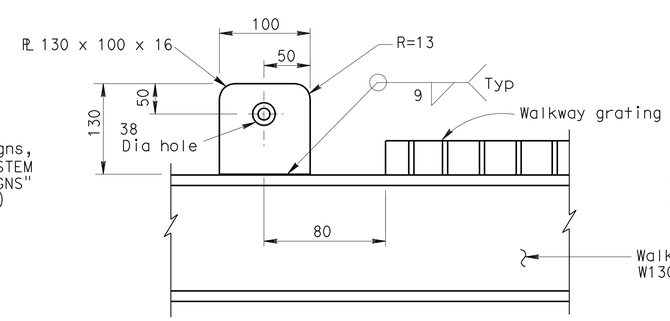

INTERIOR SAFETY LUG DETAIL

(At every walkway bracket between exterior walkway brackets)

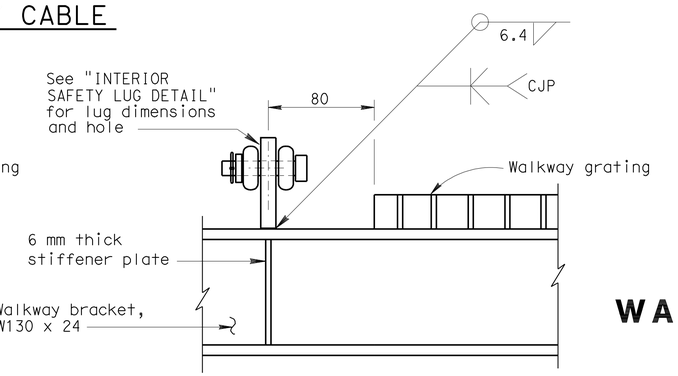

END SAFETY LUG DETAIL

(At exterior walkway brackets)

NOTES

1. Welded type grating shall have 32 x 3 bearing bars at 30 mm centers with 6 mm diameter (or equal) cross bars at 102 mm centers. If mechanical lock grating is used, it shall be equal in strength to the welded type. Alternate hold-down clips may be submitted for approval.
2. Walkway grating and light fixture mounting channels to be continuous (no splices) over as many walkway brackets as practical and consistent with fabrication, ease of handling and assembly.
3. Contractor may substitute 41 x 41 x 2.753 cont-slot steel channel with pre-punched slots not larger than 10 mm x 77 mm. Slots shall be at bottom of channel and shall be parallel to channel. Slots shall be spaced not closer than 100 mm center to center.
4. Stainless steel cable shall be plain with 6 x 19 IWRC construction using Type 302 or 304 stainless steel strands. Minimun cable breaking strength shall exceed 155 kN. Cable shall be free of kinks, knots, or deformation and shall be continuous between end lugs. Splices not allowed.
5. Shackle shall be galvanized steel with working load limit of 107 kN.
6. Place an equal amount of washers on each side to align cable with end lug without restricting shakle bolt rotation or contacting cable.
7. Cable shall be installed with a deflection not to exceed 25 mm, measure from taut position, when pulled with an upward force of 0.13 kN at midpoint between any two walkway brackets.

STATE OF CALIFORNIA
DEPARTMENT OF TRANSPORTATION

OVERHEAD SIGNS WALKWAY DETAILS No.2

NO SCALE

ALL DIMENSIONS ARE IN MILLIMETERS UNLESS OTHERWISE SHOWN

RSP S17 DATED JANUARY 24, 2005 SUPERSEDES STANDARD PLAN S17 DATED JULY 1, 2004-PAGE 326 OF THE STANDARD PLANS BOOK DATED JULY 2004.

REVISED STANDARD PLAN RSP S17

2004 REVISED Std PLAN RSP S17

DIST	COUNTY	ROUTE	KILOMETER POST TOTAL PROJECT	SHEET NO.	TOTAL SHEETS
01	Men	101	R69.4/R78.9	587	939

Caltrans Metric

REGISTERED CIVIL ENGINEER

January 24, 2005
PLANS APPROVAL DATE

REGISTERED PROFESSIONAL ENGINEER
Tillat Sattar
No. C42892
Exp. 03-31-2006
CIVIL
STATE OF CALIFORNIA

The State of California or its officers or agents shall not be responsible for the accuracy or completeness of electronic copies of this plan sheet.

To get to the Caltrans web site, go to: http://www.dot.ca.gov

To accompany plans dated 1-23-12

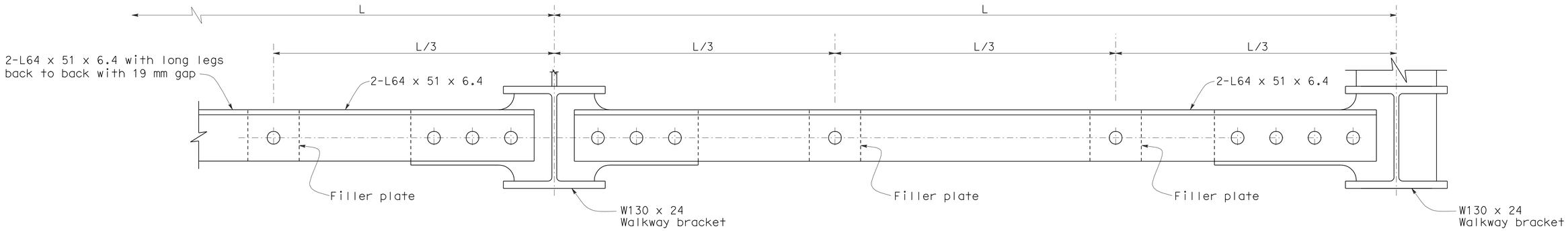

STRUT SYSTEM AT TUBULAR SIGNS

(Continuous between end safety lug locations)

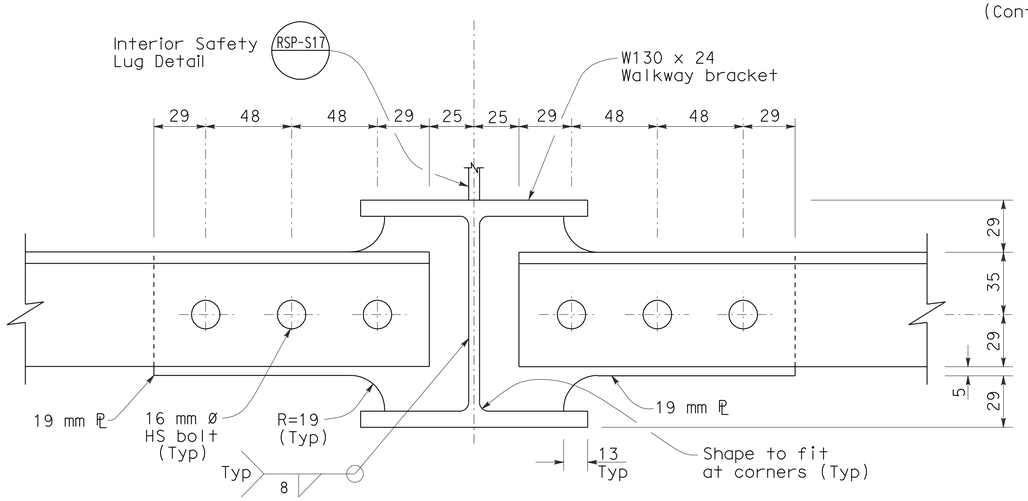

INTERIOR SAFETY LUG LOCATION

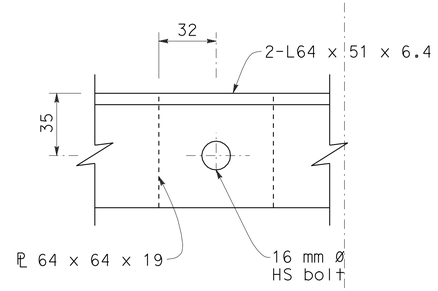

FILLER PLATE

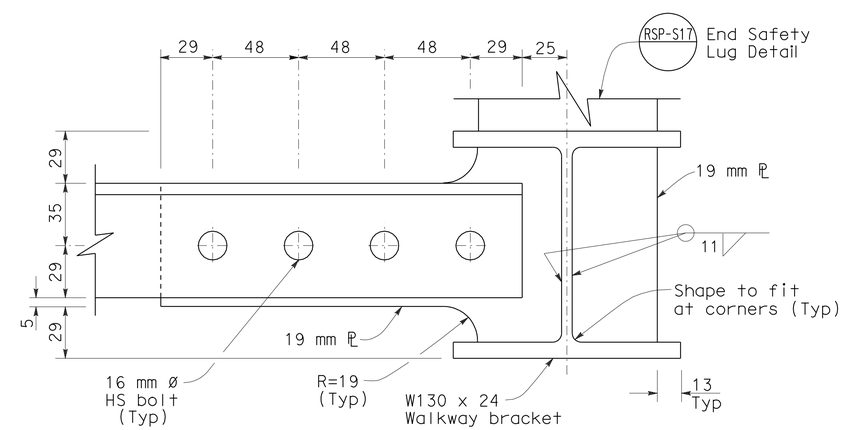

END SAFETY LUG LOCATION

STATE OF CALIFORNIA
DEPARTMENT OF TRANSPORTATION

OVERHEAD SIGNS WALKWAY DETAILS No.3

NO SCALE

ALL DIMENSIONS ARE IN MILLIMETERS UNLESS OTHERWISE SHOWN

NSP S17A DATED JANUARY 24, 2005
SUPPLEMENTS THE STANDARD PLANS BOOK DATED JULY 2004.

NEW STANDARD PLAN NSP S17A

2004 NEW Std PLAN NSP S17A

DIST	COUNTY	ROUTE	KILOMETER POST TOTAL PROJECT	SHEET NO.	TOTAL SHEETS
01	Men	101	R69.4/R78.9	588	939

REGISTERED CIVIL ENGINEER

January 24, 2005
PLANS APPROVAL DATE

REGISTERED PROFESSIONAL ENGINEER
Tillat Sattar
No. C42892
Exp. 03-31-2006
CIVIL
STATE OF CALIFORNIA

The State of California or its officers or agents shall not be responsible for the accuracy or completeness of electronic copies of this plan sheet.

To get to the Caltrans web site, go to: http://www.dot.ca.gov

To accompany plans dated 1-23-12

Caltrans Metric

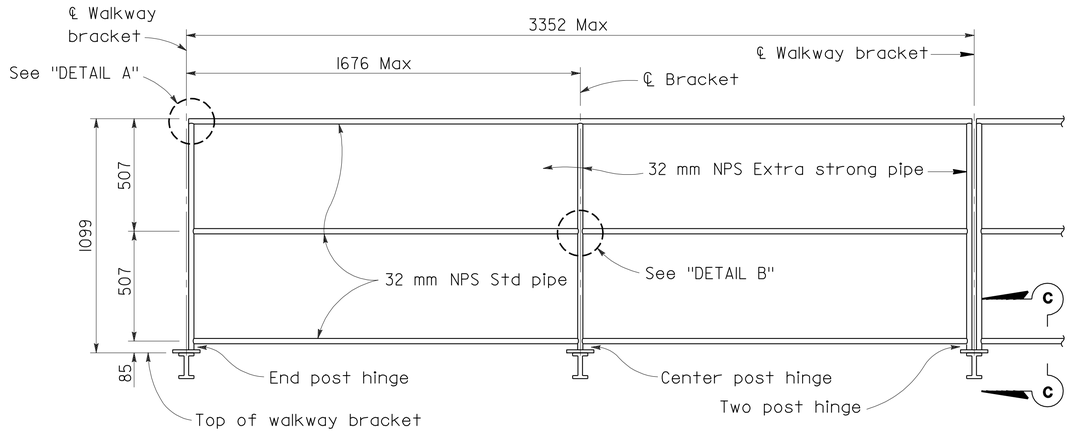

SAFETY RAILING ELEVATION

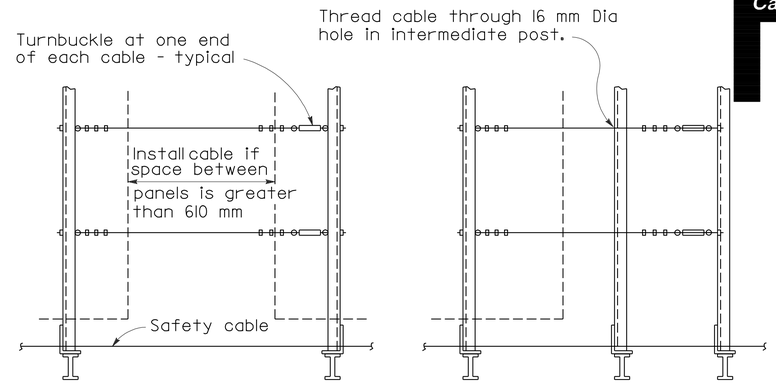

BETWEEN PANELS BEYOND PANELS

UPPER SAFETY CABLE ELEVATION

For tubular structures

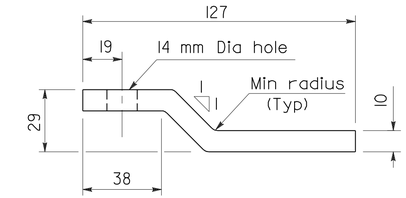

PLAN - KICKER BAR

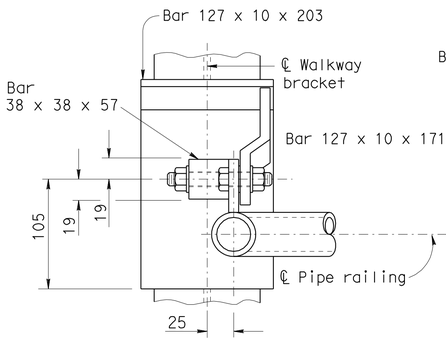

END POST

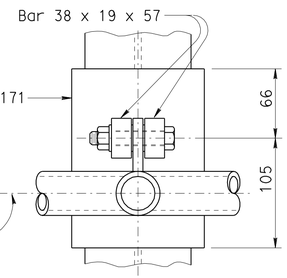

CENTER POST
WELDED HINGE - PLAN

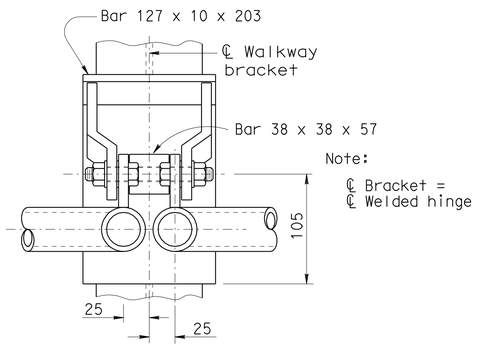

TWO POST

Note:
℄ Bracket = ℄ Welded hinge

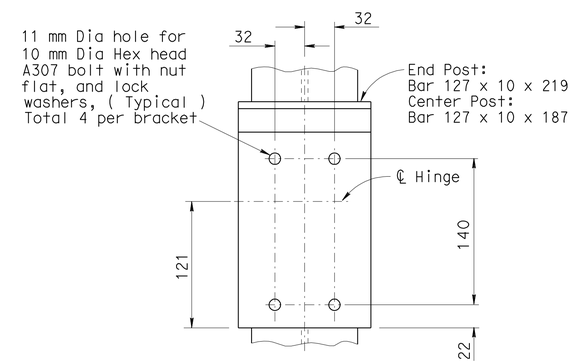

TYPICAL BOLTED (ALTERNATIVE)
HINGED CONNECTION

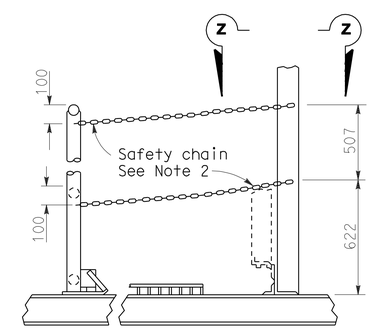

CHAIN ASSEMBLY

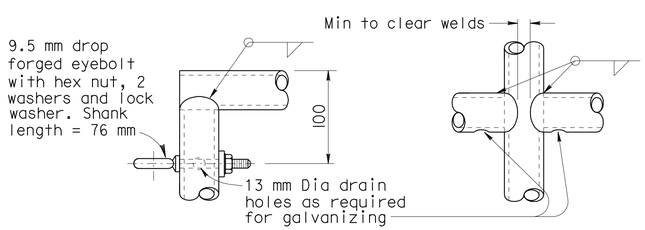

DETAIL A DETAIL B

Note: Alternative venting methods may be used if approved by the Engineer.

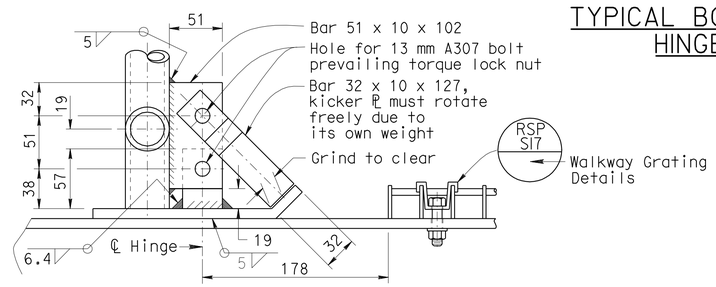

DETAIL C

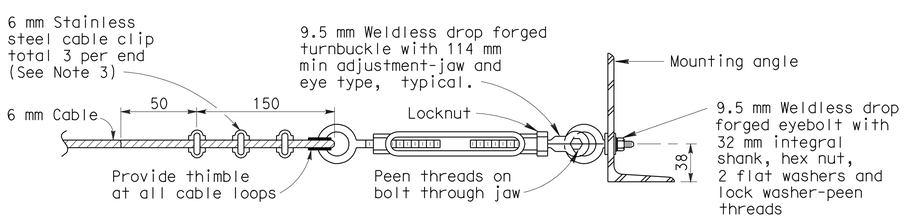

TURNBUCKLE DETAILS

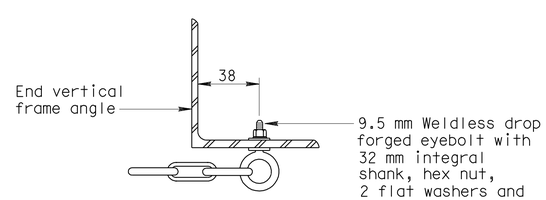

VIEW Z-Z

NOTES

1. Special care shall be taken to insure that the complete hinge and latch assembly will hold the safety railing in a steady manner, free of wobble while in the raised position. Maximum allowable displacement from vertical at top of railing when latched shall be 12 mm.
2. Safety chain shall be 9.5 mm galvanized steel coil chain, approximately 39.4 links per meter. Length shall be minimum which allows lock-up of safety railing. Minimum of two safety chains per safety railing. Material shall be Grade 43 high test chain ASTM A413.
3. Cable clips shall be installed according to manufacturer's recommendation.

STATE OF CALIFORNIA
DEPARTMENT OF TRANSPORTATION

OVERHEAD SIGNS WALKWAY SAFETY RAILING DETAILS

NO SCALE

ALL DIMENSIONS ARE IN MILLIMETERS UNLESS OTHERWISE SHOWN

RSP S18 DATED JANUARY 24, 2005 SUPERSEDES STANDARD PLAN S18 DATED JULY 1, 2004-PAGE 327 OF THE STANDARD PLANS BOOK DATED JULY 2004.

REVISED STANDARD PLAN RSP S18

2004 REVISED Std PLAN RSP S18

To accompany plans dated 1-23-12

Caltrans Metric

DIST	COUNTY	ROUTE	KILOMETER POST TOTAL PROJECT	SHEET NO.	TOTAL SHEETS
01	Men	101	R69.4/R78.9	589	939

REGISTERED CIVIL ENGINEER

January 24, 2005
PLANS APPROVAL DATE

REGISTERED PROFESSIONAL ENGINEER Tillat Sattar No. C42892 Exp. 03-31-2006 CIVIL STATE OF CALIFORNIA

The State of California or its officers or agents shall not be responsible for the accuracy or completeness of electronic copies of this plan sheet.

To get to the Caltrans web site, go to: http://www.dot.ca.gov

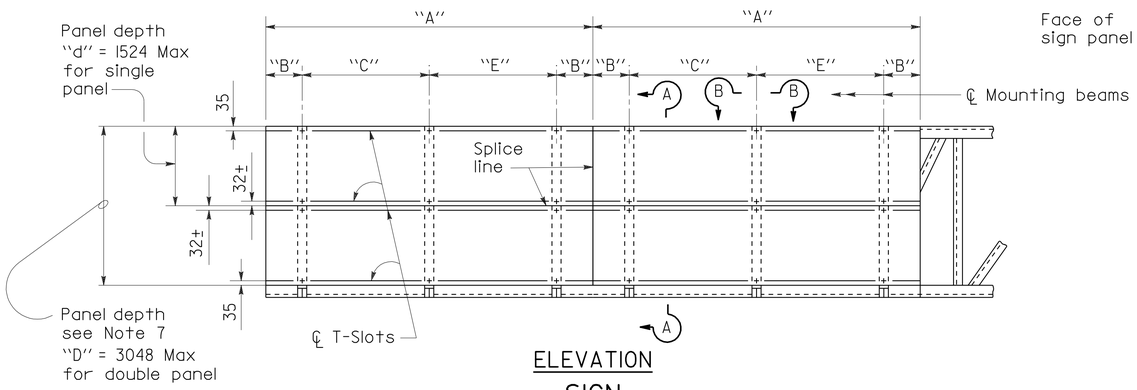

ELEVATION
SIGN

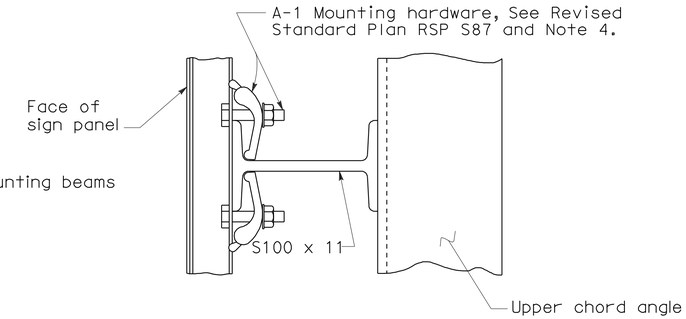

SECTION B-B

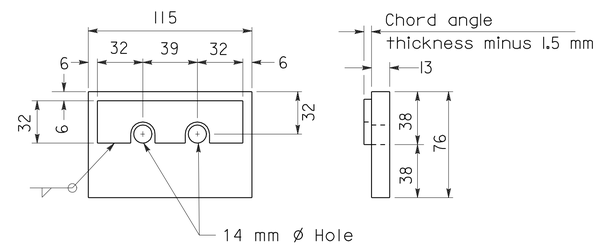

CHORD ANGLE CLAMP

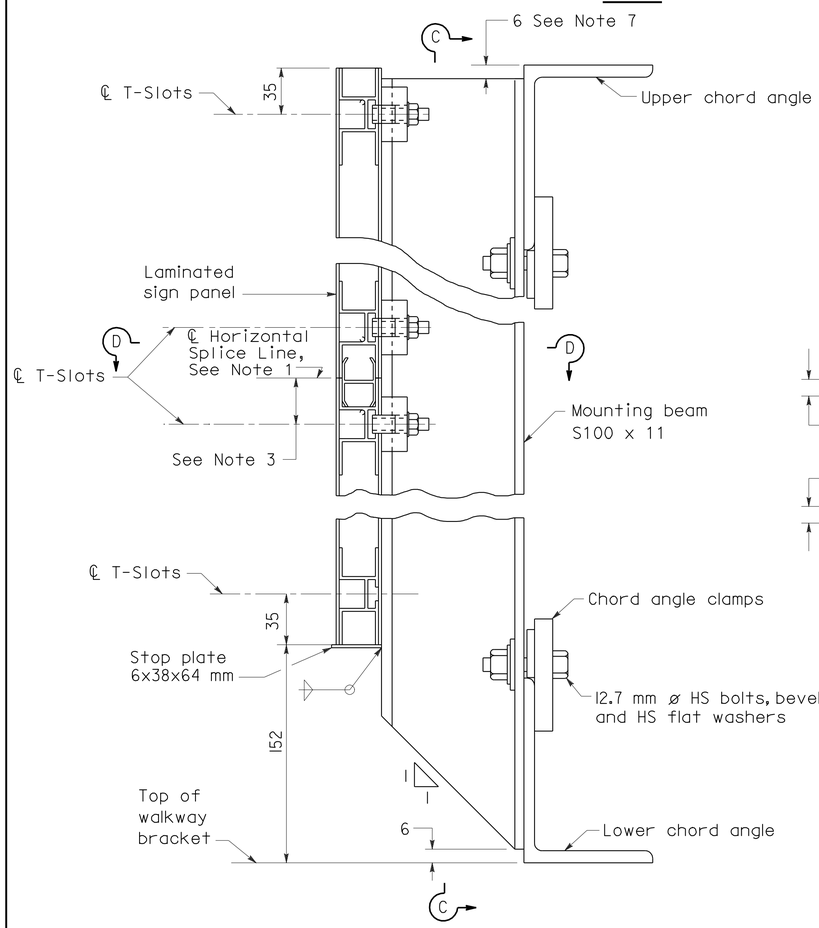

SECTION A-A

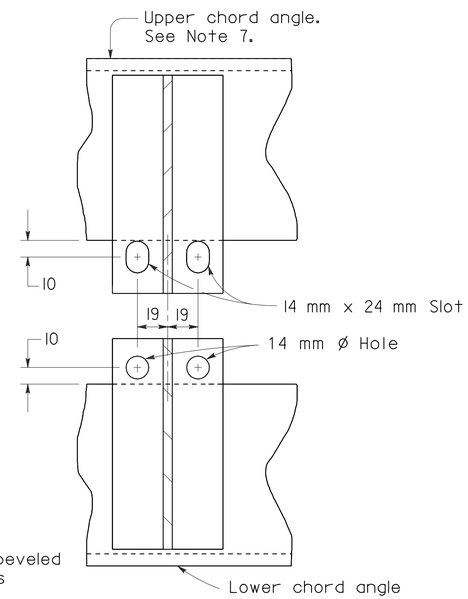

SECTION C-C

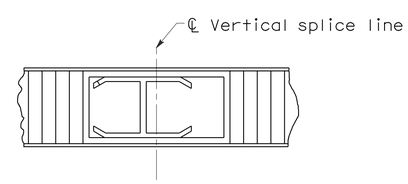

SECTION D-D

MOUNTING BEAM SPACING TABLE

SIGN PANEL LENGTH * (m)	NUMBER MOUNTING BEAMS	SIGN PANEL OVERHANG (mm)	MOUNTING BEAM SPACING (m)	(m)
"A"		"B"	"C"	"E"
1.52	2	229	1.02	
1.83	2	305	1.22	
2.13	2	381	1.37	
2.44	2	458	1.52	
2.74	2	559	1.63	
3.05	2	610	1.83	
3.35	2	610	2.13	
3.66	2	762	2.13	
3.96	2	762	2.44	
4.27	2	762	2.74	
4.57	2	915	2.74	
4.88	3	153	2.29	2.29
5.18	3	305	2.29	2.29
5.49	3	305	2.44	2.44
5.79	3	305	2.59	2.59
6.10	3	458	2.59	2.59
6.40	3	458	2.74	2.74
6.71	3	610	2.74	2.74
7.01	3	762	2.74	2.74
7.32	3	915	2.74	2.74

* Signs longer than 7.32 meters are fabricated and mounted as adjoining single panels. The location of the vertical splice line will be determined by the Engineer.

NOTES

1. The location of the horizontal splice line is dependent on the Contractor for signs greater than 1524 mm in depth.
2. Mounting bolts and clamps are required on each side of the horizontal splice lines at each support beam.
3. Dimension varies from panel to panel. Average value approximate 32 mm.
4. Torque stainless steel sign panel mounting bolts to 12 Nm.
5. Chord angle clamp to be galvanized after fabrication.
6. The Contractor shall verify all dependent dimensions in the field before ordering or fabricating any material.
7. 2794 mm and 3048 mm sign panel along with the mounting beams will project above the top chord truss member 254 mm and 508 mm respectively. Attachment details shall be the same.

STATE OF CALIFORNIA
DEPARTMENT OF TRANSPORTATION

OVERHEAD SIGNS-TRUSS SIGN MOUNTING DETAILS LAMINATED PANEL-TYPE A

NO SCALE

ALL DIMENSIONS ARE IN MILLIMETERS UNLESS OTHERWISE SHOWN

RSP S19 DATED JANUARY 24, 2005 SUPERSEDES STANDARD PLAN S19 DATED JULY 1, 2004-PAGE 328 OF THE STANDARD PLANS BOOK DATED JULY 2004.

REVISED STANDARD PLAN RSP S19

2004 REVISED Std PLAN RSP S19

To accompany plans dated 1-23-12

Caltrans Metric

DIST	COUNTY	ROUTE	KILOMETER POST TOTAL PROJECT	SHEET NO.	TOTAL SHEETS
01	Men	101	R69.4/R78.9	590	939

REGISTERED CIVIL ENGINEER

January 24, 2005
PLANS APPROVAL DATE

REGISTERED PROFESSIONAL ENGINEER Tillat Sattar No. C42892 Exp. 03-31-2006 CIVIL STATE OF CALIFORNIA

The State of California or its officers or agents shall not be responsible for the accuracy or completeness of electronic copies of this plan sheet.

To get to the Caltrans web site, go to: http://www.dot.ca.gov

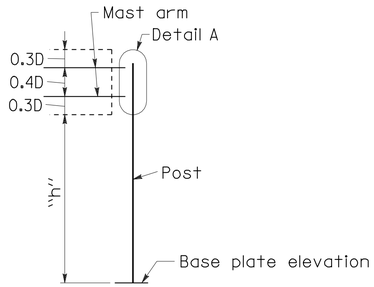

DOUBLE MAST ARM SERIES
TYPE C-1

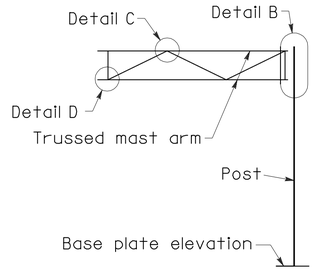

TRUSSED MAST ARM SERIES
TYPE C-2

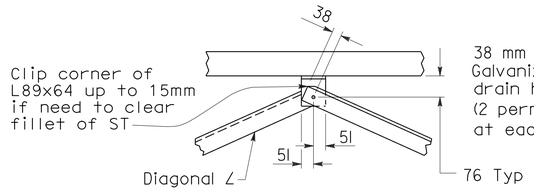

DETAIL C

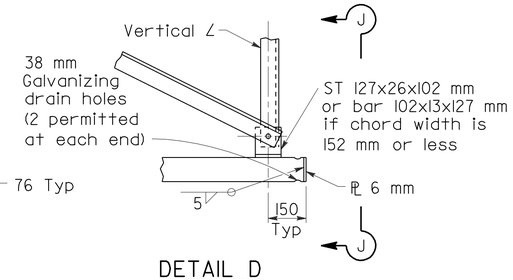

DETAIL D

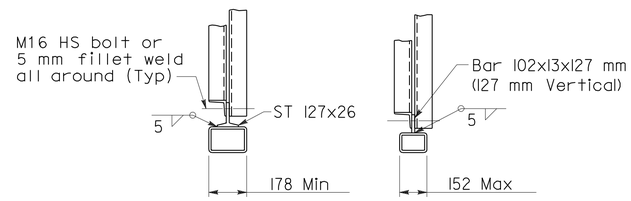

SECTION J-J

POST ANGLES			
POST SIZE	ANGLE (mm)	X (mm)	WELD (mm)
6	∠127x76x12.7	44	7
8	∠152x102x15.9	57	7
10	∠178x102x15.9	57	7
12	∠203x102x19.0	57	8
14	∠203x102x19.0	57	8

POST TO ARM FRAMING DATA

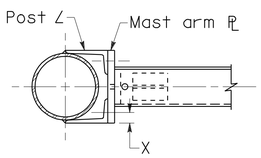

SECTION G-G

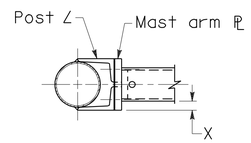

SECTION F-F

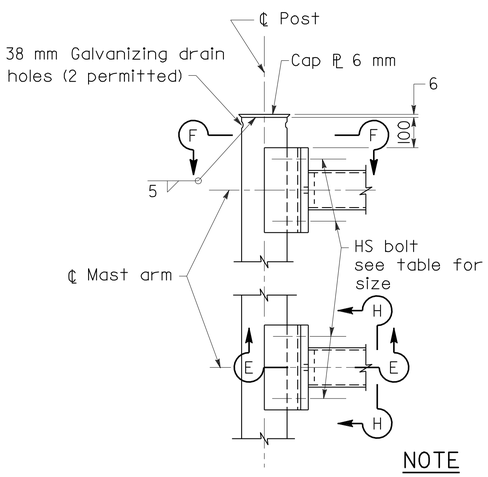

DETAIL A

NOTE

"T" equals vertical dimension of mast arm.

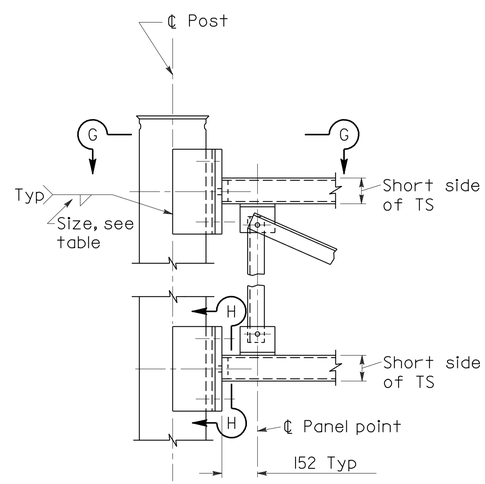

DETAIL B

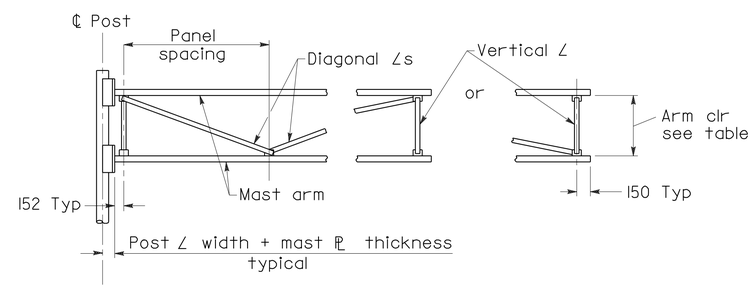

TRUSS FRAMING DATA

SIGN DEPTH (mm)	ARM CLEARANCE (mm)	MAX PANEL SPACING (mm)	VERTICAL ANGLE (mm)	DIAGONAL ANGLE (mm)
D=1016-1778	610	1321	51x51x6.4	51x51x6.4
D=2032-2540	914	1981	89x64x6.4*	89x64x6.4*

*Short leg outstanding

MAST ARM PLATE			
TWO ARMS	TRUSSED ARMS	PLATE (mm)	HS BOLT
TS 76x76x6.4		19	M16
TS 102x102x6.4		25.4	M16
TS 127x127x6.4		25.4	M20
TS 152x152x6.4		25.4	M20
TS 178x178x6.4	TS 127x76x9.5	32	M20
	TS 152x102x9.5	32	M22
	TS 178x127x9.5	32	M22
	TS 203x152x9.5	32	M22
	TS 254x152x9.5	32	M24

NOTES

For post connection to base PL see RSP S48

For mast arm length and mast-arm-to sign panel connections see S46

See other plan sheets for:

1. Sign type and location.
2. Panel type and location on structure.
3. Post size and dimension "h".
4. Mast arm size.
5. Foundation type.
6. Illumination if required.

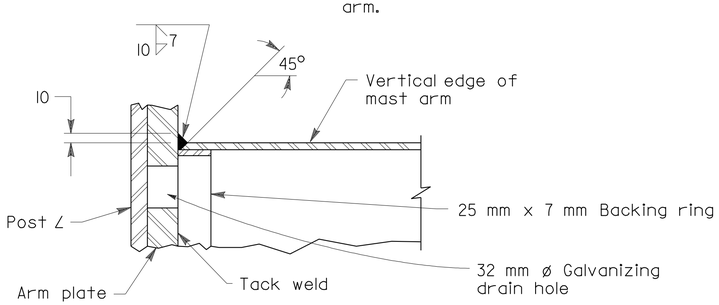

SECTION E-E

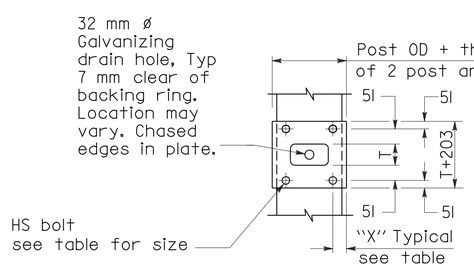

SECTION H-H

NOTE

"T" equals vertical dimension of mast arm.

Bottom connection shown. Top similar.

For General Notes see RSP S48

STATE OF CALIFORNIA
DEPARTMENT OF TRANSPORTATION

OVERHEAD SIGNS-LIGHTWEIGHT TYPE C CONNECTIONS DETAILS

NO SCALE

ALL DIMENSIONS ARE IN MILLIMETERS UNLESS OTHERWISE SHOWN

RSP S45 DATED JANUARY 24, 2005 SUPERSEDES STANDARD PLAN S45 DATED JULY 1, 2004-PAGE 344 OF THE STANDARD PLANS BOOK DATED JULY 2004.

REVISED STANDARD PLAN RSP S45

2004 REVISED Std PLAN RSP S45

DIST	COUNTY	ROUTE	KILOMETER POST TOTAL PROJECT	SHEET NO.	TOTAL SHEETS
01	Men	101	R69.4/R78.9	591	939

REGISTERED CIVIL ENGINEER

January 24, 2005
PLANS APPROVAL DATE

REGISTERED PROFESSIONAL ENGINEER Tillat Sattar No. C42892 Exp. 03-31-2006 CIVIL STATE OF CALIFORNIA

The State of California or its officers or agents shall not be responsible for the accuracy or completeness of electronic copies of this plan sheet.

To get to the Caltrans web site, go to: http://www.dot.ca.gov

To accompany plans dated 1-23-12

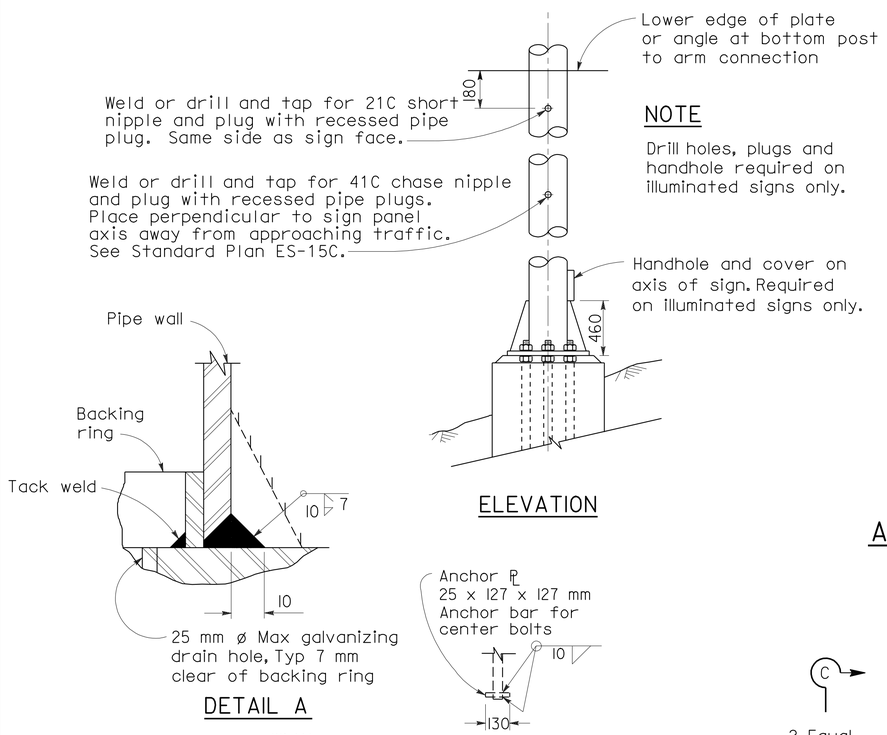

NOTE

Drill holes, plugs and handhole required on illuminated signs only.

DETAIL A

ELEVATION

SINGLE SIDE BOLT

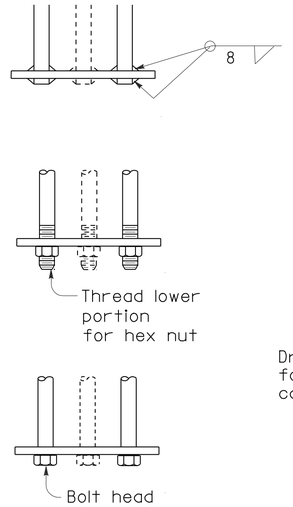

ALTERNATIVE BAR CONNECTIONS

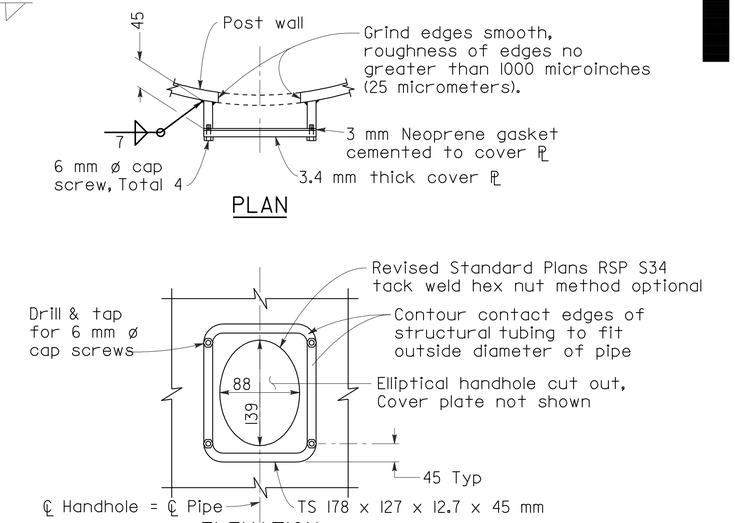

PLAN

ELEVATION

TYPICAL DETAILS OF HANDHOLE AND COVER

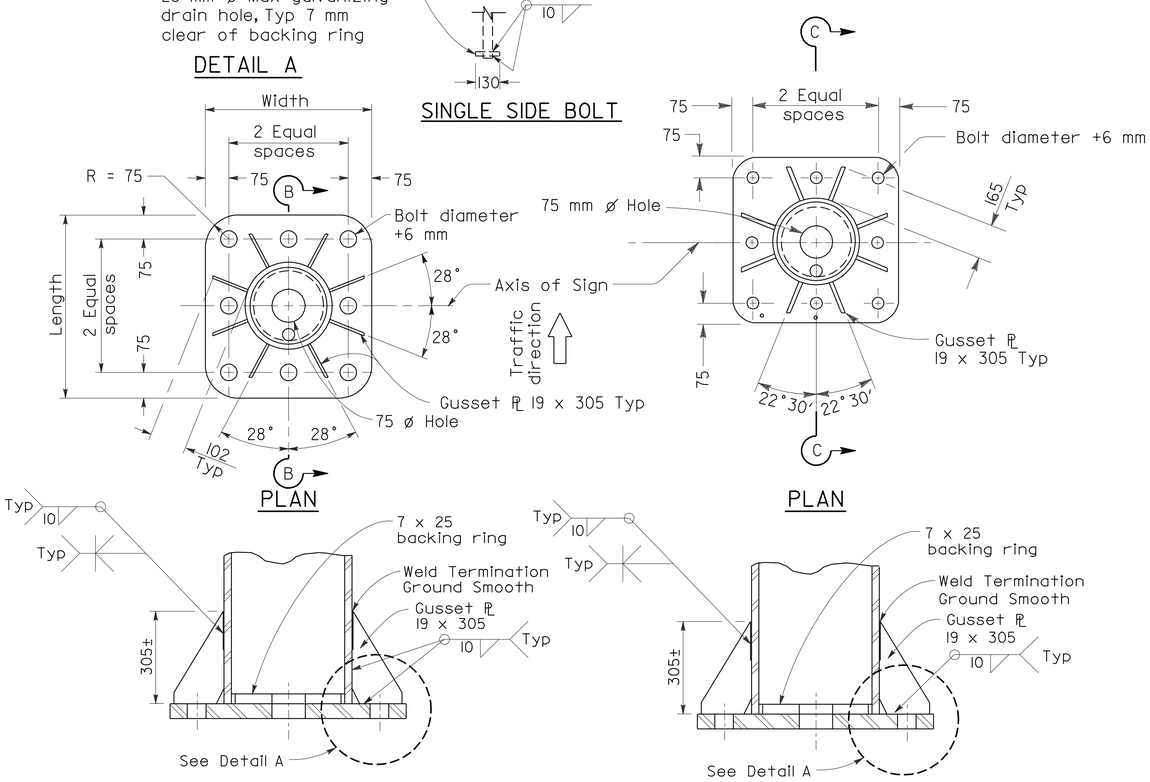

PLAN

PLAN

SECTION B-B
6 NPS THRU 8 NPS POSTS

SECTION C-C
10 NPS THRU 14 NPS POSTS

BASE PLATE DETAILS

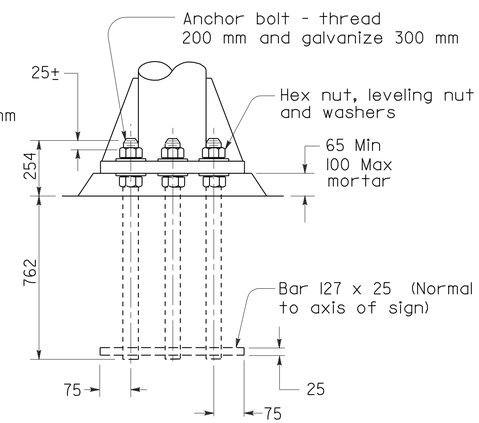

ANCHORAGE BOLT

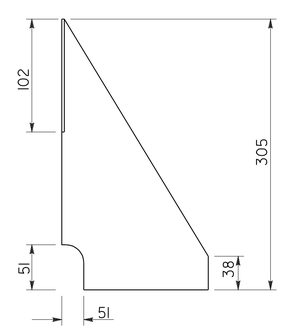

GUSSET DETAIL

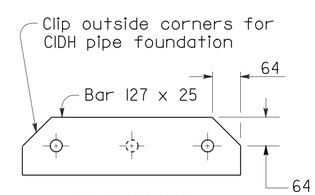

BAR PLAN

ANCHORAGE DETAILS

GENERAL NOTES

DESIGN: AASHTO Standard Specifications for Structural Supports for Highway Signs, Luminaires and Traffic Signals, dated 1994.

CONSTRUCTION: Standard Specifications and the Special Provision.

WELDING: All welding continuous unless otherwise noted on the plans. All welding to be done in accordance with the Standard Specifications.

NOTES

1. Footing shall be placed with long dimensions normal to axis of sign.
2. On single post signs the post shall be raked out of plumb with the use of leveling nuts to make the bottom of the sign panel level.
3. 51mm ø anchor bolts may be substituted for 45 mm ø bolts. 64 mm ø anchor bolts may be substituted for 57 mm ø bolts.

Post Size		Base Plate (mm)	Anchor Bolts	
NPS	"t" (mm)		#	Bolt ø
6	7.11	51 x 534 x 534	8	51 mm
6	10.97	51 x 534 x 534	8	51 mm
8	8.18	51 x 534 x 534	8	51 mm
8	12.7	51 x 534 x 534	8	51 mm
10	12.7	51 x 715 x 715	8	57 mm
12	12.7	51 x 715 x 715	8	57 mm
14	12.7	51 x 715 x 715	8	57 mm
14	19.0	51 x 715 x 715	8	57 mm

"t" = Wall Thickness

STATE OF CALIFORNIA
DEPARTMENT OF TRANSPORTATION

OVERHEAD SIGNS-LIGHTWEIGHT POST DETAILS

NO SCALE

ALL DIMENSIONS ARE IN MILLIMETERS UNLESS OTHERWISE SHOWN

RSP S48 DATED JANUARY 24, 2005 SUPERSEDES STANDARD PLAN S48 DATED JULY 1, 2004-PAGE 347 OF THE STANDARD PLANS BOOK DATED JULY 2004.

REVISED STANDARD PLAN RSP S48

2004 REVISED Std PLAN RSP S48

DIST	COUNTY	ROUTE	KILOMETER POST TOTAL PROJECT	SHEET NO.	TOTAL SHEETS
01	Men	101	R69.4/R78.9	592	939

REGISTERED CIVIL ENGINEER

January 24, 2005
PLANS APPROVAL DATE

REGISTERED PROFESSIONAL ENGINEER
Tillat Sattar
No. C42892
Exp. 03-31-2006
CIVIL
STATE OF CALIFORNIA

The State of California or its officers or agents shall not be responsible for the accuracy or completeness of electronic copies of this plan sheet.

To get to the Caltrans web site, go to: http://www.dot.ca.gov

To accompany plans dated 1-23-12

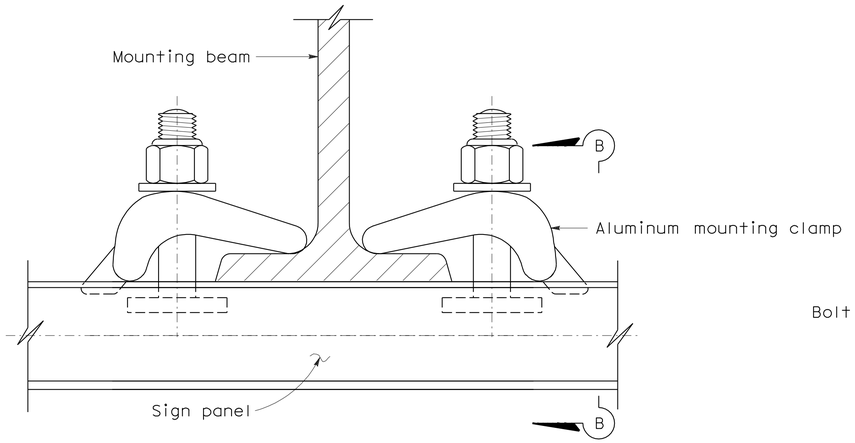

TYPICAL ALUMINUM CLAMP MOUNTING

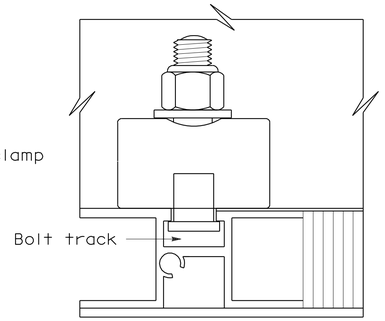

SECTION B-B
TYPICAL BOLTED CONNECTION TO STRUCTURE SUPPORT

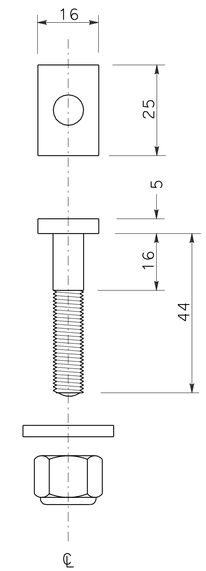

STAINLESS STEEL BOLT

A-1 HARDWARE QUANTITY TABLE

SIGN LENGTH mm	SIGN DEPTH mm - See Note 6	UNITS REQUIRED See Note 5
4572 or less	1270 - 1524	4
4877 - 7315	1270 - 1524	6
4572 or less	1778 - 3048	8
4877 - 7315	1778 - 3048	12

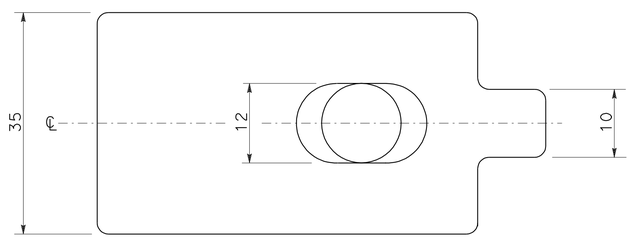

TOP VIEW

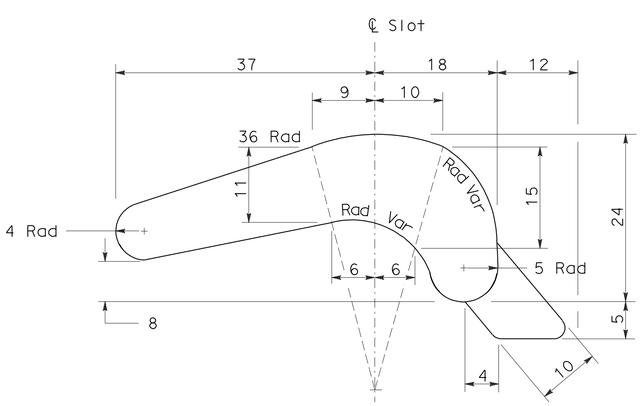

SIDE VIEW

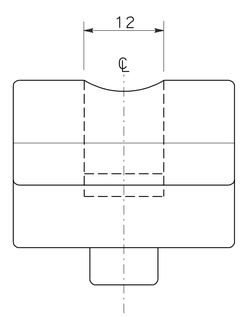

FRONT VIEW

NOTES

1. Refer to applicable Standard Plan for additional mounting details.
2. Mounting clamp shall be aluminum casting as specified in the Special Provisions.
3. Rectangular head bolt, hexagon stop nut, and flat washer shall be 10 mm diameter (18-8) stainless steel.
4. One unit of A-1 hardware shall consist of two sets of these components: clamp, bolt, nut and washer.
5. Signs 2794 mm and 3048 mm in depth may be fabricated in three panel sections to avoid legend from being placed on a horizontal seam. Increase number of units of mounting hardware accordingly.

STATE OF CALIFORNIA
DEPARTMENT OF TRANSPORTATION

TYPE A-1 MOUNTING HARDWARE OVERHEAD LAMINATED TYPE A PANEL TRUSS AND LIGHTWEIGHT SIGN STRUCTURES

NO SCALE

ALL DIMENSIONS ARE IN MILLIMETERS UNLESS OTHERWISE SHOWN

RSP S87 DATED JANUARY 24, 2005 SUPERSEDES STANDARD PLAN S87 DATED JULY 1, 2004-PAGE 369 OF THE STANDARD PLANS BOOK DATED JULY 2004.

REVISED STANDARD PLAN RSP S87

2004 REVISED Std PLAN RSP S87

DIST	COUNTY	ROUTE	KILOMETER POST TOTAL PROJECT	SHEET NO.	TOTAL SHEETS
01	Men	101	R69.4/R78.9	593	939

Caltrans Metric

REGISTERED CIVIL ENGINEER

January 24, 2005
PLANS APPROVAL DATE

REGISTERED PROFESSIONAL ENGINEER
Tillat Sattar
No. C42892
Exp. 03-31-2006
CIVIL
STATE OF CALIFORNIA

The State of California or its officers or agents shall not be responsible for the accuracy or completeness of electronic copies of this plan sheet.

To get to the Caltrans web site, go to: http://www.dot.ca.gov

To accompany plans dated 1-23-12

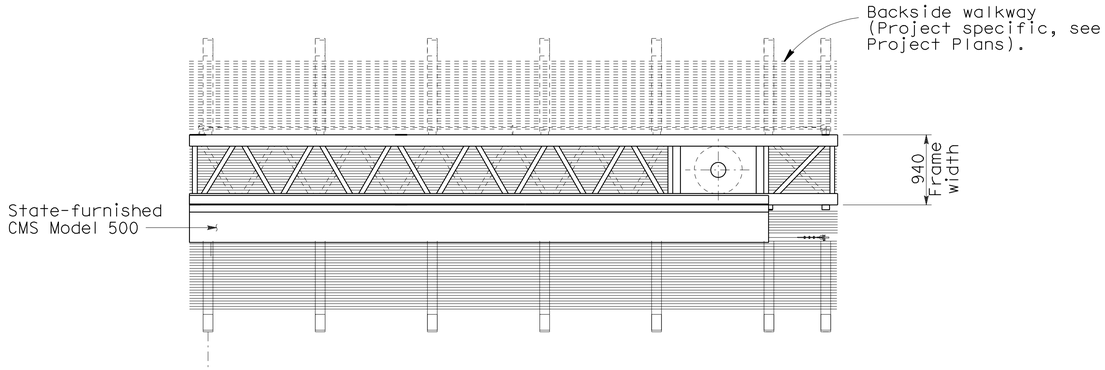

PLAN

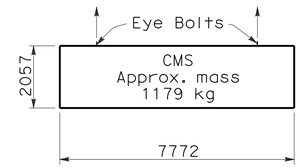

LIFTING DIAGRAM

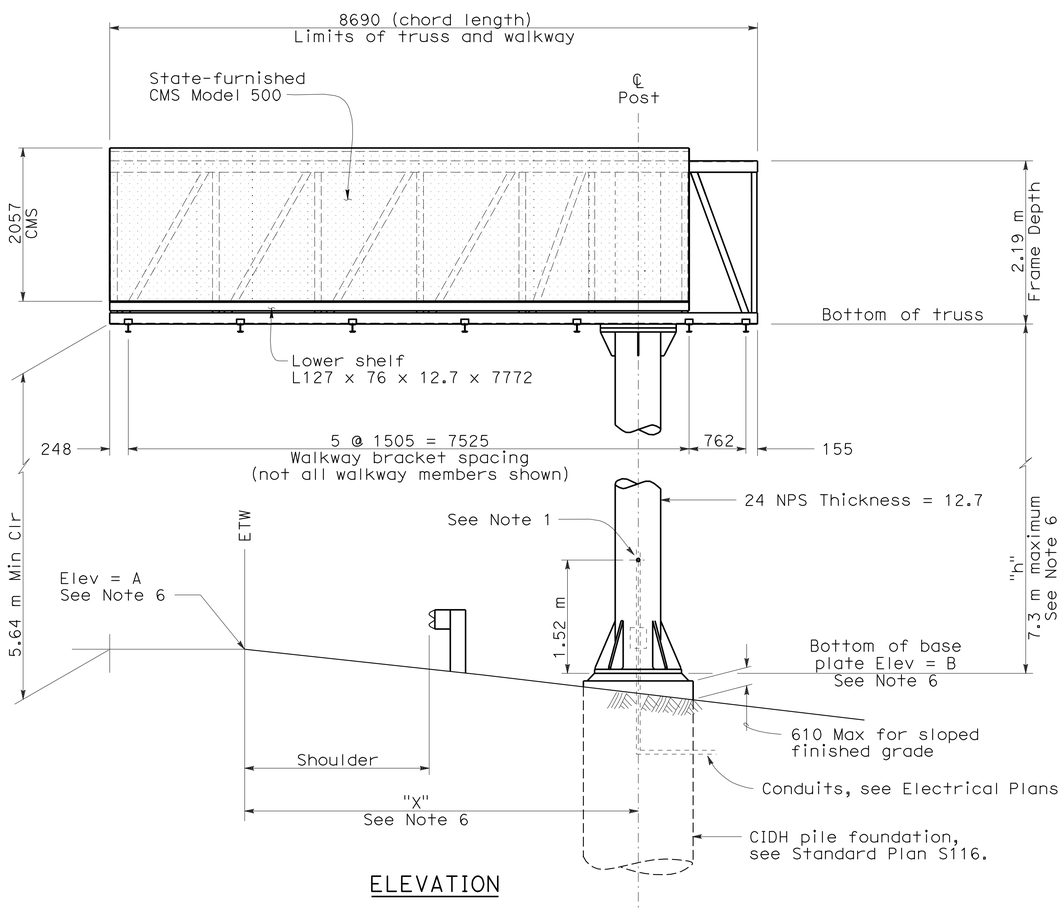

ELEVATION

GENERAL NOTES

DESIGN:

AASHTO Specifications for Structural Supports for Highway Signs, Luminaires and Traffic Signals, dated 2001.

CONSTRUCTION:

Standard Specifications and the Special Provisions.

LOADING:

WIND LOADING:

Normal to face of sign: 1930 Pa on 100% panel coverage.

Transverse to face of sign: 20% of normal force.

WALKWAY LOADING:

Dead load +229 kg concentrated live load.

UNIT STRESSES:

STRUCTURAL STEEL: fy = 250 MPa
REINFORCED CONCRETE: fy = 415 MPa
f'c = 25 MPa
FOOTING SOIL PRESSURE: 120 kPa (spread footing)

MINIMUM CLEARANCE

Vertical roadway clearance 5.50 m above roadway and shoulders

WELDING:

All welding continuous unless otherwise noted on the plans.

NOTES

1. Drill and tap for Size 63 recessed pipe plug.
2. Changeable Message Sign will be State-furnished.
3. For location and elevation of sign structure see Project Plans.
4. Sign support post shall be raked out of plumb with leveling nuts to make the bottom of the sign frame level.
5. At final position of post top and bottom nuts shall be tightened against base plate.
6. See Project Plans.

STATE OF CALIFORNIA
DEPARTMENT OF TRANSPORTATION

OVERHEAD SIGN-TRUSS SINGLE POST TYPE LAYOUT UNBALANCED BUTTERFLY CHANGEABLE MESSAGE SIGNS MODEL 500

NO SCALE

ALL DIMENSIONS ARE IN MILLIMETERS UNLESS OTHERWISE SHOWN

RSP S101 DATED JANUARY 24, 2005 SUPERSEDES STANDARD PLAN S101 DATED JULY 1, 2004-PAGE 378 OF THE STANDARD PLANS BOOK DATED JULY 2004.

REVISED STANDARD PLAN RSP S101

2004 REVISED Std PLAN RSP S101

DIST	COUNTY	ROUTE	KILOMETER POST TOTAL PROJECT	SHEET NO.	TOTAL SHEETS
01	Men	101	R69.4/R78.9	594	939

REGISTERED CIVIL ENGINEER

January 24, 2005
PLANS APPROVAL DATE

REGISTERED PROFESSIONAL ENGINEER
Tillat Sattar
No. C42892
Exp. 03-31-2006
CIVIL
STATE OF CALIFORNIA

The State of California or its officers or agents shall not be responsible for the accuracy or completeness of electronic copies of this plan sheet.

To get to the Caltrans web site, go to: http://www.dot.ca.gov

To accompany plans dated 1-23-12

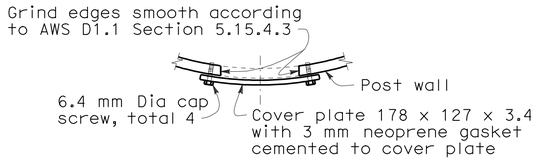

PLAN

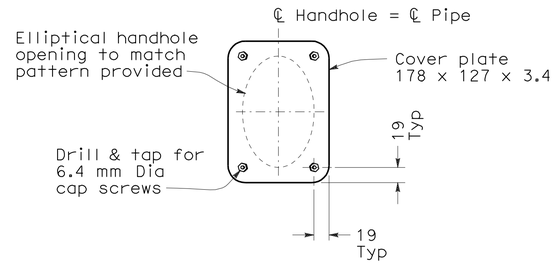

ELEVATION

UPPER HANDHOLE AND COVER DETAILS

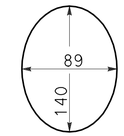

PATTERN OF ELLIPTICAL HANDHOLE CUT OUT

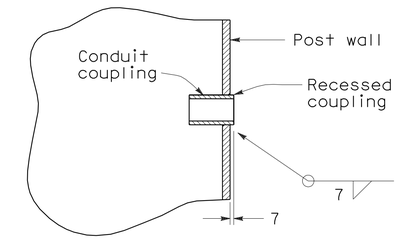

RECESSED COUPLING DETAIL

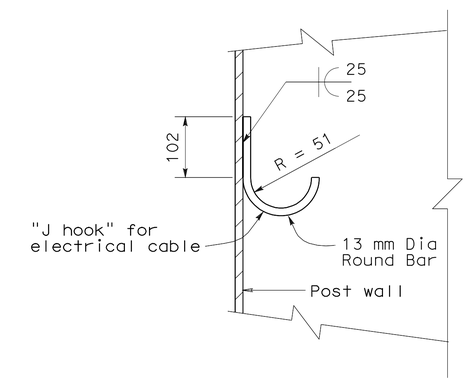

J HOOK DETAIL

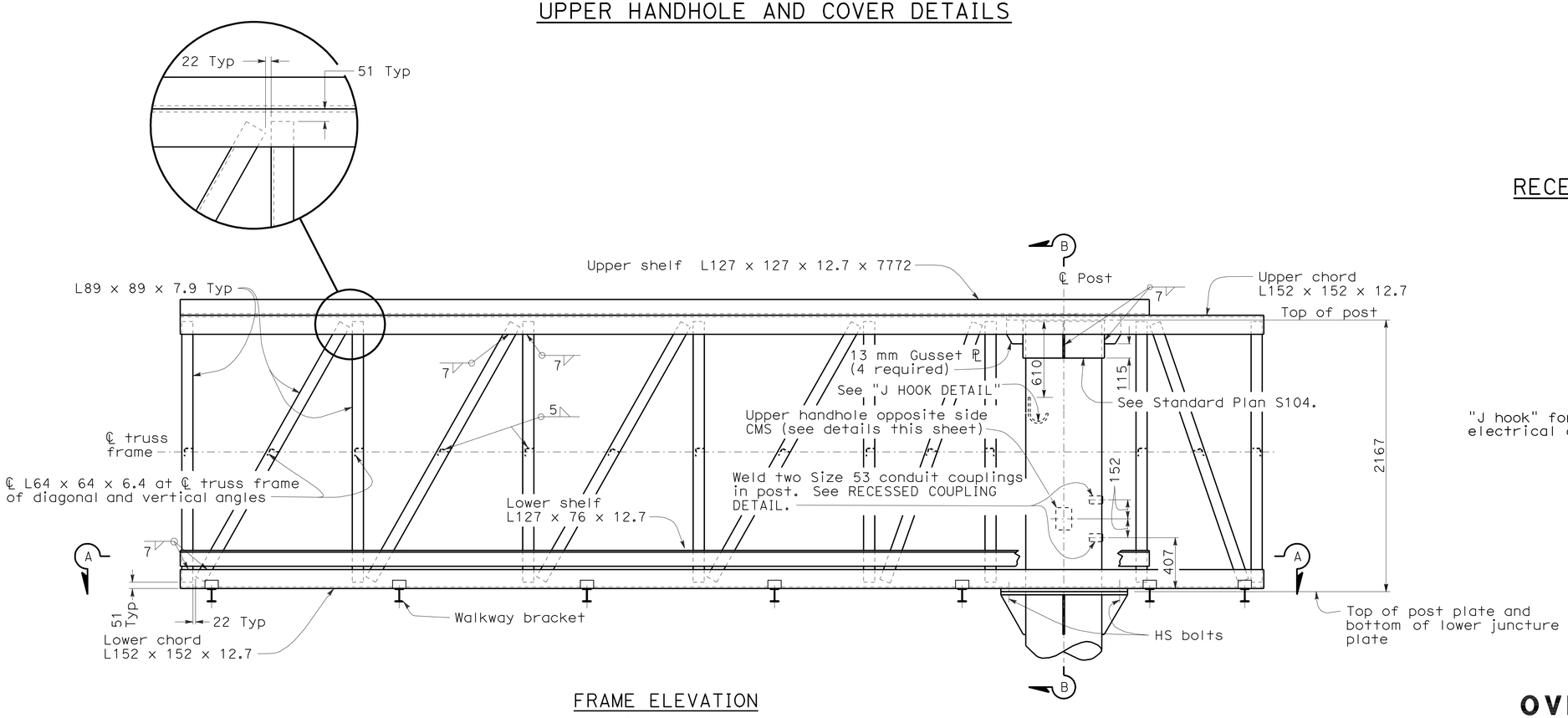

FRAME ELEVATION

See Note 1

NOTES

1. Walkways and safety anchorages not shown for clarity.
2. For Section B-B details, see Standard Plan S104.
3. For Section A-A details, including vertical angle spacing, see Standard Plan S104.

STATE OF CALIFORNIA
DEPARTMENT OF TRANSPORTATION

OVERHEAD SIGN-TRUSS SINGLE POST TYPE STRUCTURAL FRAME DETAILS UNBALANCED BUTTERFLY CHANGEABLE MESSAGE SIGNS MODEL 500

NO SCALE

ALL DIMENSIONS ARE IN MILLIMETERS UNLESS OTHERWISE SHOWN

RSP S102 DATED JANUARY 24, 2005 SUPERSEDES STANDARD PLAN S102 DATED JULY 1, 2004-PAGE 379 OF THE STANDARD PLANS BOOK DATED JULY 2004.

REVISED STANDARD PLAN RSP S102

2004 REVISED Std PLAN RSP S102

DIST	COUNTY	ROUTE	KILOMETER POST TOTAL PROJECT	SHEET NO.	TOTAL SHEETS
01	Men	101	R69.4/R78.9	595	939

REGISTERED CIVIL ENGINEER

January 24, 2005
PLANS APPROVAL DATE

REGISTERED PROFESSIONAL ENGINEER
Tillat Sattar
No. C42892
Exp. 03-31-2006
CIVIL
STATE OF CALIFORNIA

The State of California or its officers or agents shall not be responsible for the accuracy or completeness of electronic copies of this plan sheet.

To get to the Caltrans web site, go to: http://www.dot.ca.gov

To accompany plans dated 1-23-12

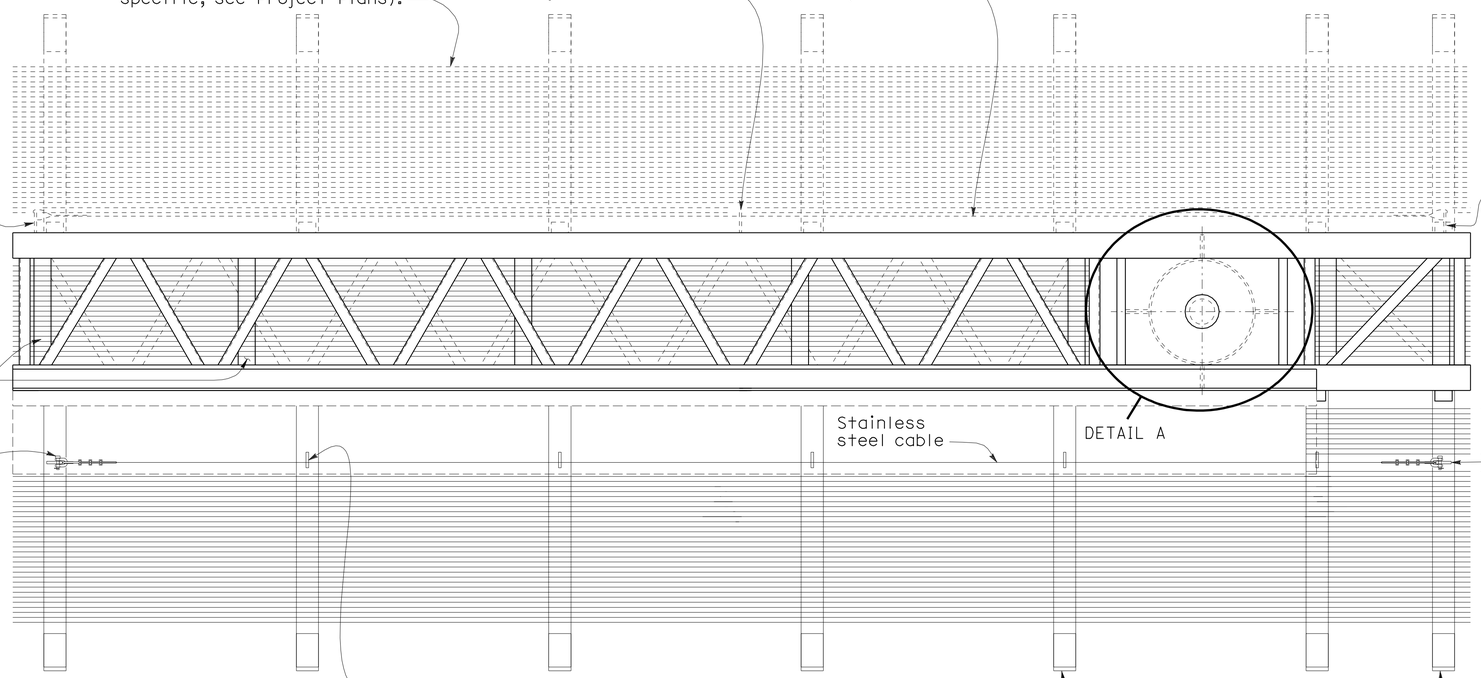

PLAN

NOTES:

1. Crossties at vertical and diagonal Ls and internal diagonals not shown for clarity.
2. Interior grating and backside weld lugs shall be installed only for projects requiring backside walkways.

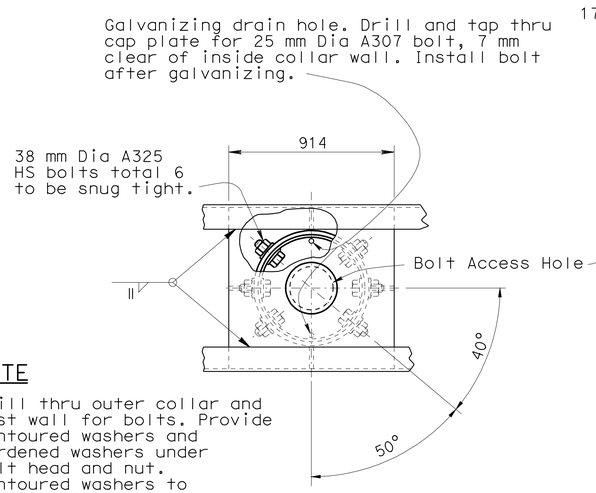

NOTE

Drill thru outer collar and post wall for bolts. Provide contoured washers and hardened washers under bolt head and nut. Contoured washers to be 76 x 76 x 8 mm Min. Grind face to fit.

DETAIL A

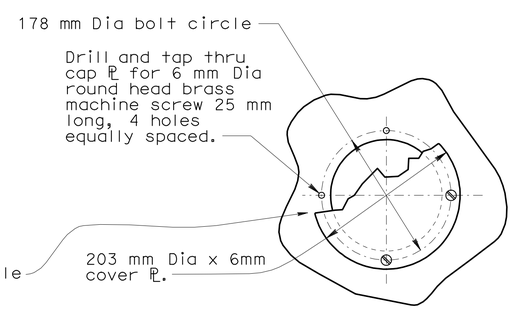

PLAN

BOLT-ACCESS HOLE

Single Post Type

STATE OF CALIFORNIA
DEPARTMENT OF TRANSPORTATION

OVERHEAD SIGN-TRUSS SINGLE POST TYPE PLAN AND UPPER BOLT DETAILS UNBALANCED BUTTERFLY CHANGABLE MESSAGE SIGNS MODEL 500

NO SCALE

ALL DIMENSIONS ARE IN MILLIMETERS UNLESS OTHERWISE SHOWN

RSP S103 DATED JANUARY 24, 2005 SUPERSEDES STANDARD PLAN S103 DATED JULY 1, 2004-PAGE 308 OF THE STANDARD PLANS BOOK DATED JULY 2004.

REVISED STANDARD PLAN RSP S103

2004 REVISED Std PLAN RSP S103

DIST	COUNTY	ROUTE	KILOMETER POST TOTAL PROJECT	SHEET NO.	TOTAL SHEETS
01	Men	101	R69.4/R78.9	596	939

REGISTERED CIVIL ENGINEER

January 24, 2005
PLANS APPROVAL DATE

REGISTERED PROFESSIONAL ENGINEER
Tillat Sattar
No. C42892
Exp. 03-31-2006
CIVIL
STATE OF CALIFORNIA

The State of California or its officers or agents shall not be responsible for the accuracy or completeness of electronic copies of this plan sheet.

To get to the Caltrans web site, go to: http://www.dot.ca.gov

To accompany plans dated 1-23-12

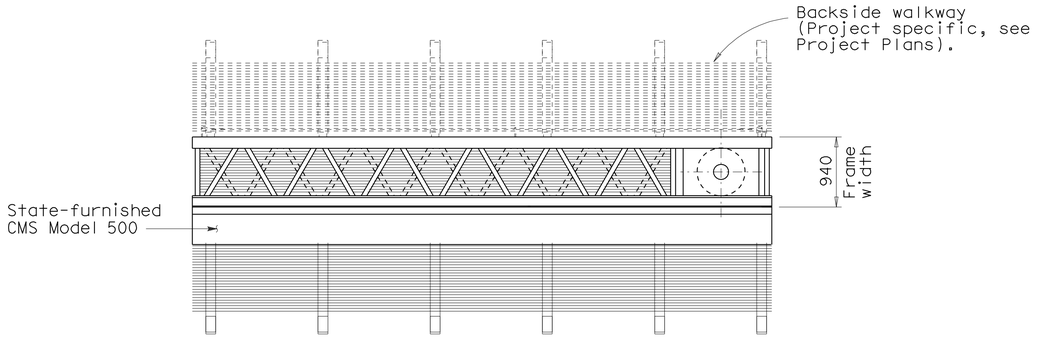

PLAN

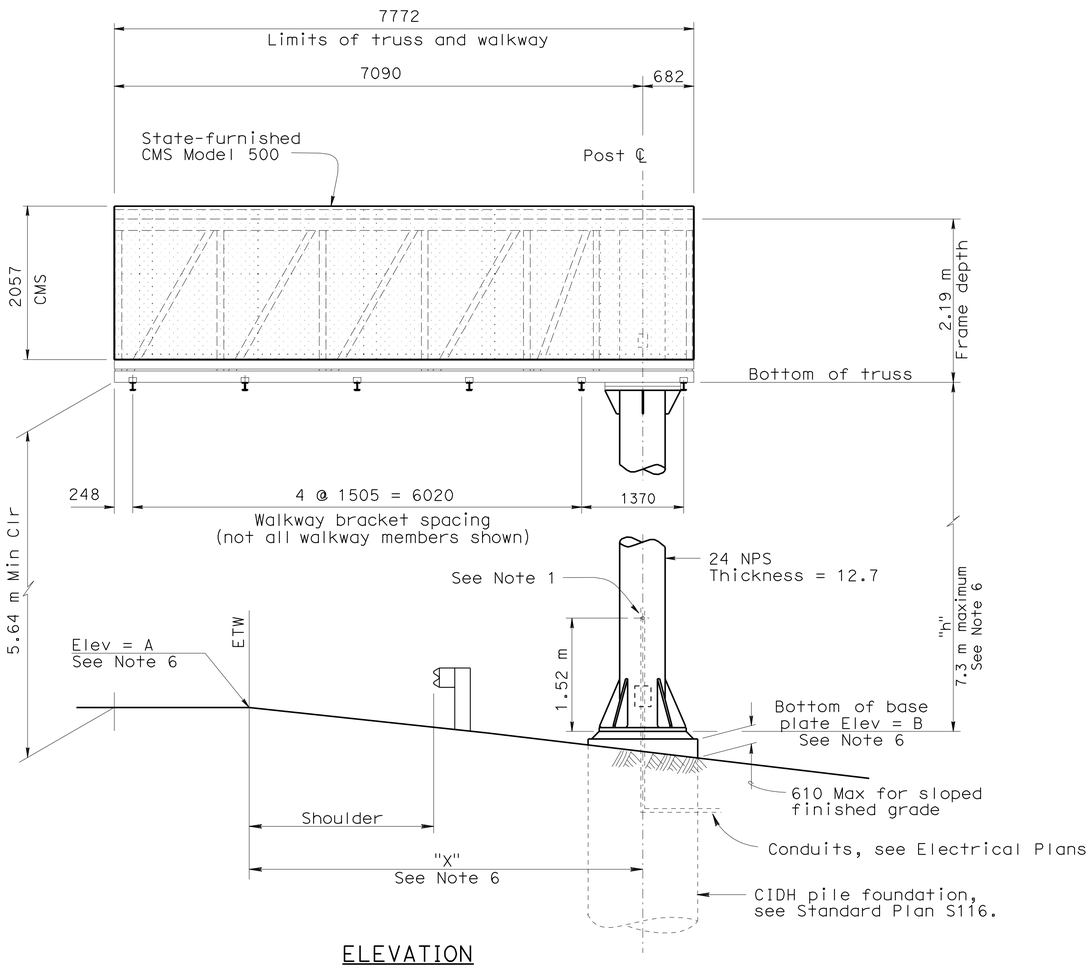

ELEVATION

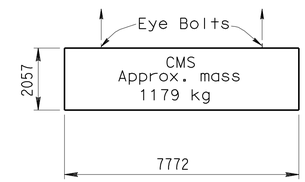

LIFTING DIAGRAM

NOTES

1. Drill and tap for Size 63 recessed pipe plug.
2. Changeable Message Sign will be State-furnished.
3. For location and elevation of sign structure see Project Plans.
4. Sign support post shall be raked out of plumb with leveling nuts to make the bottom of the sign frame level.
5. At final position of post top and bottom nuts shall be tightened against base plate.
6. See Project Plans.
7. For "General Notes", see Revised Standard Plan RSP S101.

STATE OF CALIFORNIA
DEPARTMENT OF TRANSPORTATION

OVERHEAD SIGN-TRUSS SINGLE POST TYPE LAYOUT FULL CANTILEVER CHANGEABLE MESSAGE SIGNS MODEL 500

NO SCALE

ALL DIMENSIONS ARE IN
MILLIMETERS UNLESS OTHERWISE SHOWN

RSP S109 DATED JANUARY 24, 2005 SUPERSEDES STANDARD PLAN S109
DATED JULY 1, 2004-PAGE 386 OF THE STANDARD PLANS BOOK DATED JULY 2004.

REVISED STANDARD PLAN RSP S109

2004 REVISED Std PLAN RSP S109

DIST	COUNTY	ROUTE	KILOMETER POST TOTAL PROJECT	SHEET NO.	TOTAL SHEETS
01	Men	101	R69.4/R78.9	597	939

REGISTERED CIVIL ENGINEER

January 24, 2005
PLANS APPROVAL DATE

REGISTERED PROFESSIONAL ENGINEER
Tillat Sattar
No. C42892
Exp. 03-31-2006
CIVIL
STATE OF CALIFORNIA

The State of California or its officers or agents shall not be responsible for the accuracy or completeness of electronic copies of this plan sheet.

To get to the Caltrans web site, go to: http://www.dot.ca.gov

To accompany plans dated 1-23-12

Caltrans Metric

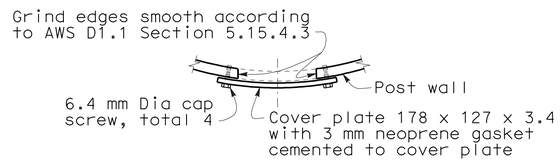

PLAN

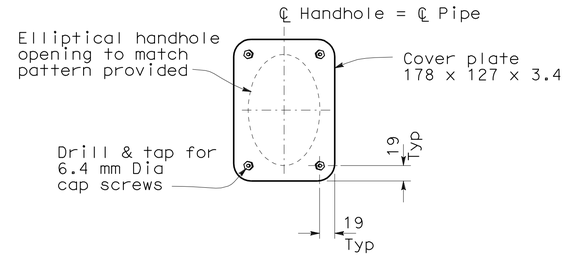

ELEVATION

UPPER HANDHOLE AND COVER DETAILS

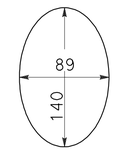

PATTERN OF ELLIPTICAL HANDHOLE CUT OUT

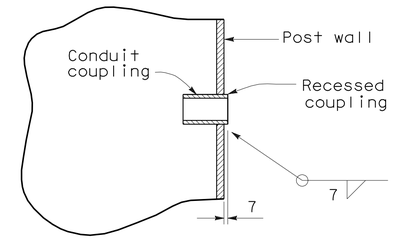

RECESSED COUPLING DETAIL

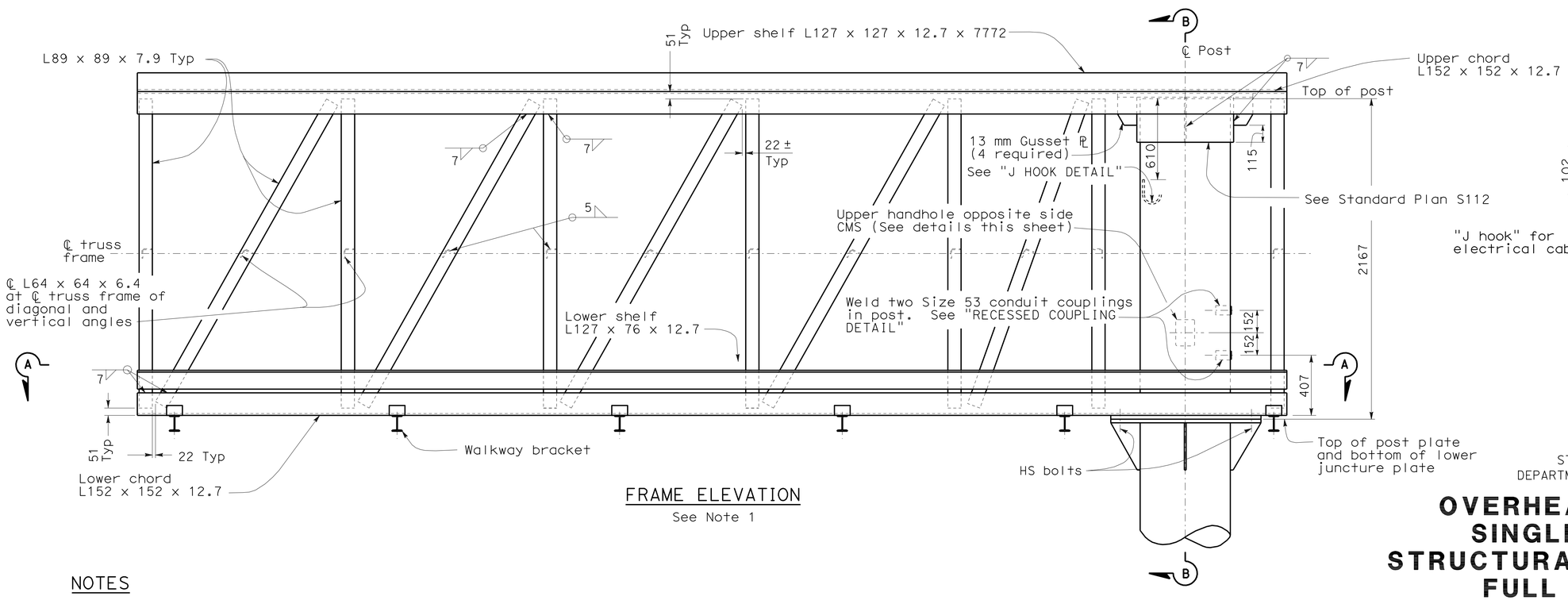

FRAME ELEVATION

See Note 1

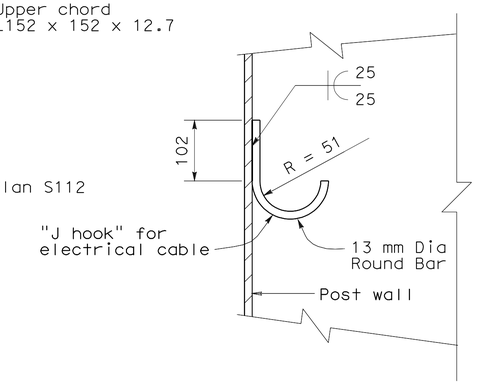

J HOOK DETAIL

NOTES

1. Walkways and safety anchorages not shown for clarity.
2. For Section B-B details, see Standard Plan S112.
3. For Section A-A details, including vertical angle spacing, see Standard Plan S112.

STATE OF CALIFORNIA
DEPARTMENT OF TRANSPORTATION

OVERHEAD SIGN-TRUSS SINGLE POST TYPE STRUCTURAL FRAME DETAILS FULL CANTILEVER CHANGEABLE MESSAGE SIGNS MODEL 500

NO SCALE

ALL DIMENSIONS ARE IN MILLIMETERS UNLESS OTHERWISE SHOWN

RSP S110 DATED JANUARY 24, 2005 SUPERSEDES STANDARD PLAN S110 DATED JULY 1, 2004-PAGE 387 OF THE STANDARD PLANS BOOK DATED JULY 2004.

REVISED STANDARD PLAN RSP S110

2004 REVISED Std PLAN RSP S110

DIST	COUNTY	ROUTE	KILOMETER POST TOTAL PROJECT	SHEET NO.	TOTAL SHEETS
01	Men	101	R69.4/R78.9	598	939

Caltrans Metric

REGISTERED CIVIL ENGINEER

January 24, 2005
PLANS APPROVAL DATE

REGISTERED PROFESSIONAL ENGINEER
Tillat Sattar
No. C42892
Exp. 03-31-2006
CIVIL
STATE OF CALIFORNIA

The State of California or its officers or agents shall not be responsible for the accuracy or completeness of electronic copies of this plan sheet.

To get to the Caltrans web site, go to: http://www.dot.ca.gov

To accompany plans dated 1-23-12

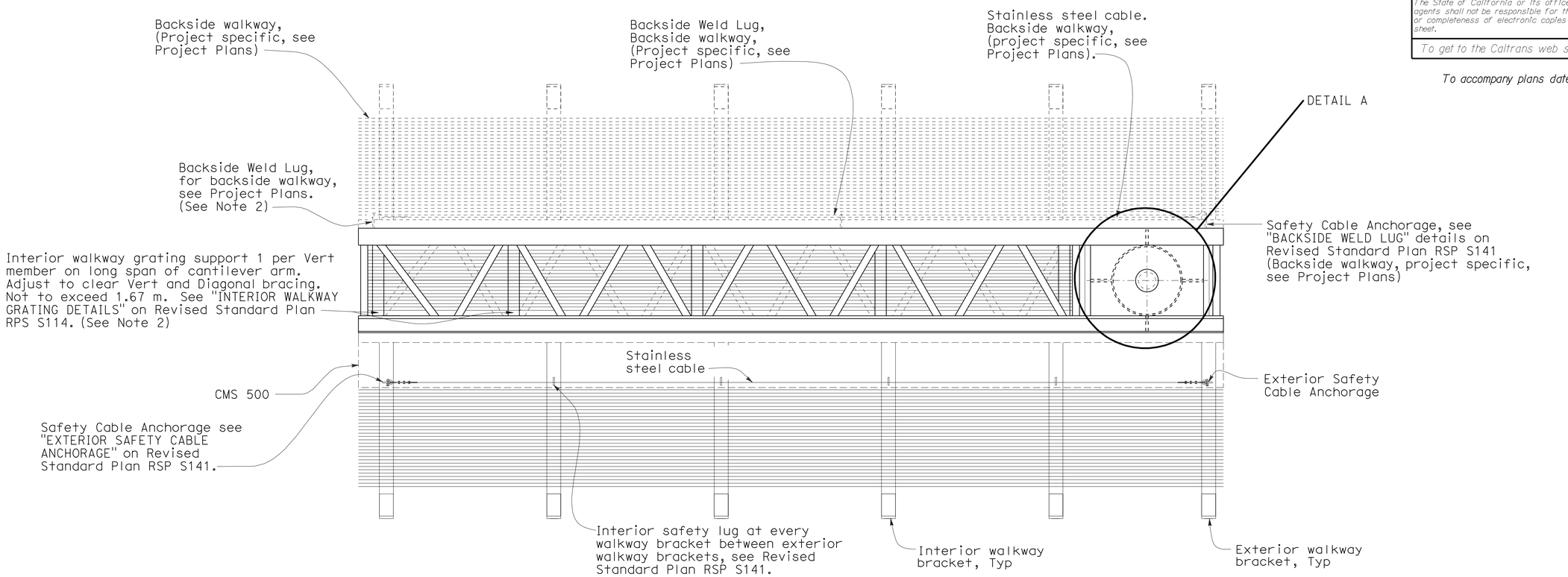

PLAN

NOTES:

1. Crossties at vertical and diagonal Ls and internal diagonals not shown for clarity.
2. Interior grating and backside weld lugs shall be installed only for projects requiring backside walkways.

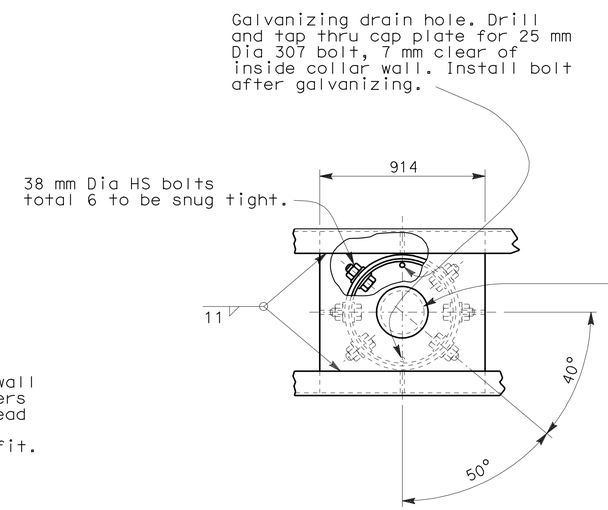

DETAIL A

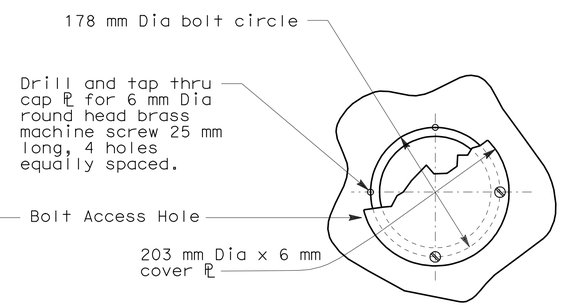

PLAN

BOLT-ACCESS HOLE

Single Post Type

NOTE

Drill thru outer collar and post wall for bolts. Provide contoured washers and hardened washers under bolt head and nut. Contoured washers to be 76 x 76 x 8 mm Min Grind face to fit.

STATE OF CALIFORNIA
DEPARTMENT OF TRANSPORTATION

OVERHEAD SIGN-TRUSS SINGLE POST TYPE PLAN AND UPPER BOLT DETAILS FULL CANTILEVER CHANGEABLE MESSAGE SIGNS MODEL 500

NO SCALE

ALL DIMENSIONS ARE IN MILLIMETERS UNLESS OTHERWISE SHOWN

RSP S111 DATED JANUARY 24, 2005 SUPERSEDES STANDARD PLAN S111 DATED JULY 1, 2004-PAGE 388 OF THE STANDARD PLANS BOOK DATED JULY 2004.

REVISED STANDARD PLAN RSP S111

2004 REVISED Std PLAN RSP S111

DIST	COUNTY	ROUTE	KILOMETER POST TOTAL PROJECT	SHEET NO.	TOTAL SHEETS
01	Men	101	R69.4/R78.9	599	939

REGISTERED CIVIL ENGINEER

January 24, 2005
PLANS APPROVAL DATE

REGISTERED PROFESSIONAL ENGINEER
Tillat Sattar
No. C42892
Exp. 03-31-2006
CIVIL
STATE OF CALIFORNIA

The State of California or its officers or agents shall not be responsible for the accuracy or completeness of electronic copies of this plan sheet.

To get to the Caltrans web site, go to: http://www.dot.ca.gov

To accompany plans dated 1-23-12

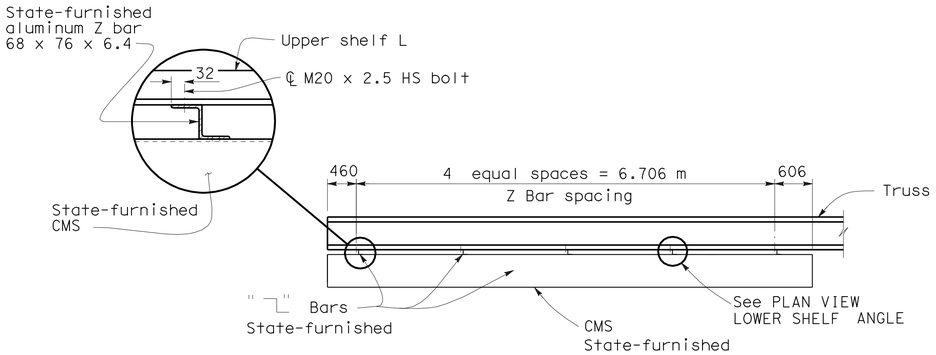

ALUMINUM Z BAR SPACING

NOTE

Contractor shall verify Z bar spacing prior to drilling holes in shelf angle

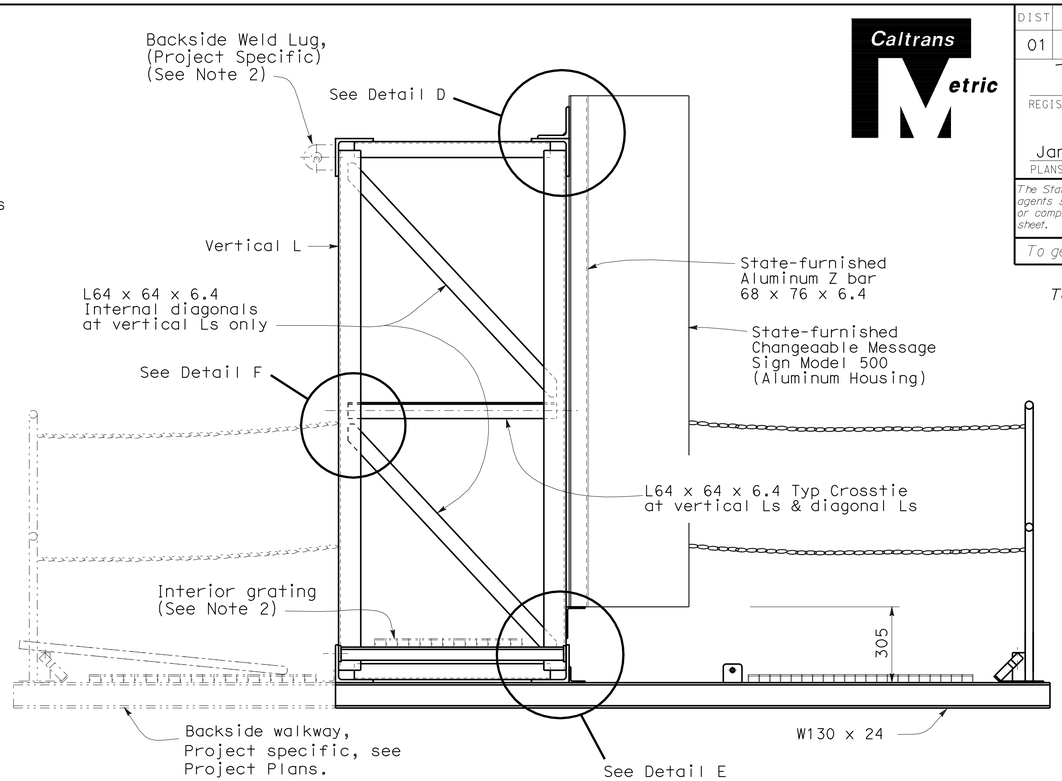

TYPICAL SECTION FRAME

NOTES:

1. Diagonal Ls in plane of truss not shown. Bracing shown is at all vertical Ls of truss.
2. Interior grating and backside weld lugs shall be installed only for projects requiring backside walkways.

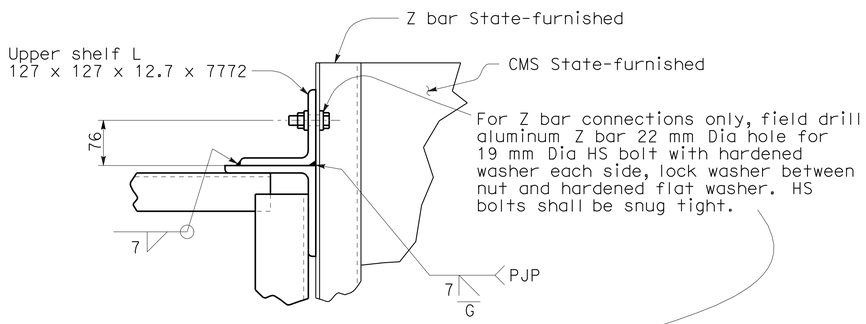

DETAIL D

No Scale

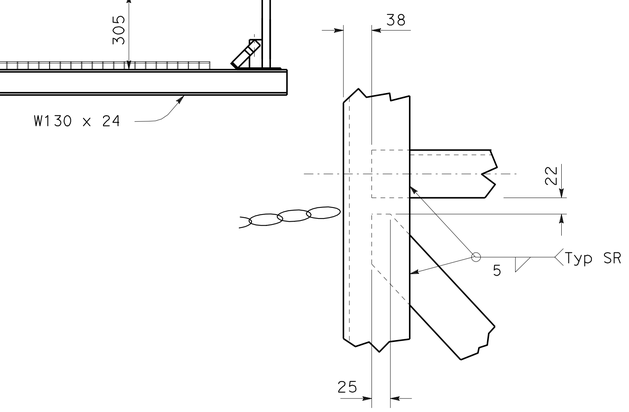

DETAIL F

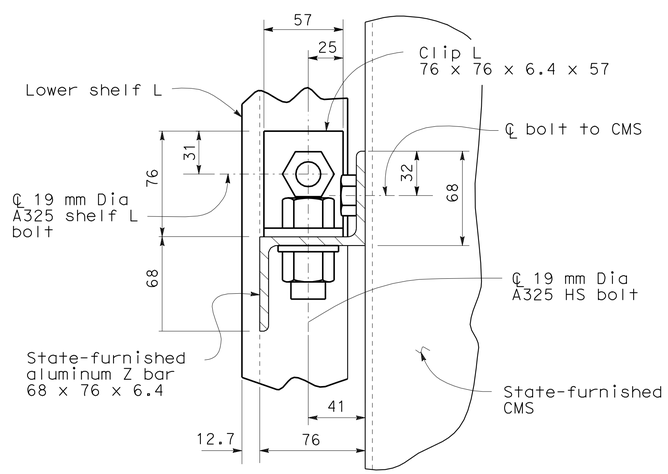

PLAN VIEW Z BAR AT LOWER SHELF ANGLE

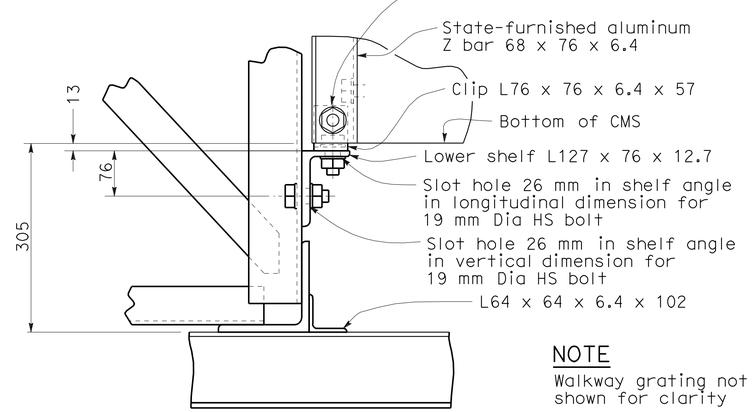

NOTE

Walkway grating not shown for clarity

DETAIL E

STATE OF CALIFORNIA
DEPARTMENT OF TRANSPORTATION

OVERHEAD SIGN-TRUSS SINGLE POST TYPE MOUNTING DETAILS CHANGEABLE MESSAGE SIGNS MODEL 500

NO SCALE

ALL DIMENSIONS ARE IN MILLIMETERS UNLESS OTHERWISE SHOWN

RSP S113 DATED JANUARY 24, 2005 SUPERSEDES STANDARD PLAN S113 DATED JULY 1, 2004-PAGE 390 OF THE STANDARD PLANS BOOK DATED JULY 2004.

REVISED STANDARD PLAN RSP S113

2004 REVISED Std PLAN RSP S113

DIST	COUNTY	ROUTE	KILOMETER POST TOTAL PROJECT	SHEET NO.	TOTAL SHEETS
01	Men	101	R69.4/R78.9	600	939

REGISTERED CIVIL ENGINEER

January 24, 2005
PLANS APPROVAL DATE

REGISTERED PROFESSIONAL ENGINEER
Tillat Sattar
No. C42892
Exp. 03-31-2006
CIVIL
STATE OF CALIFORNIA

The State of California or its officers or agents shall not be responsible for the accuracy or completeness of electronic copies of this plan sheet.

To get to the Caltrans web site, go to: http://www.dot.ca.gov

To accompany plans dated 1-23-12

2004 REVISED Std PLAN RSP S114

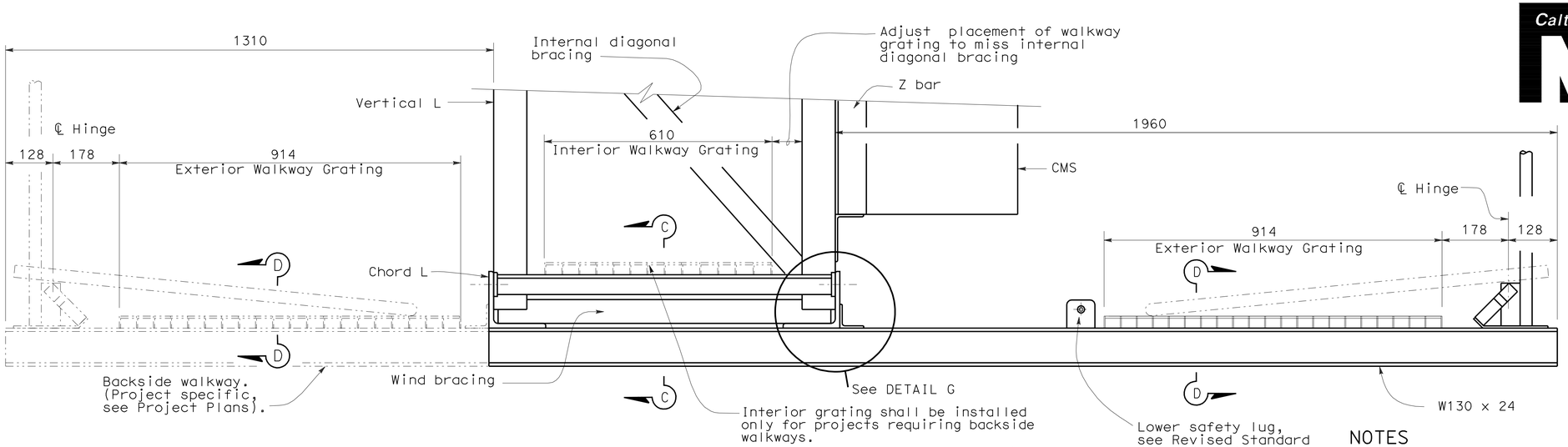

TYPICAL WALKWAY SECTION

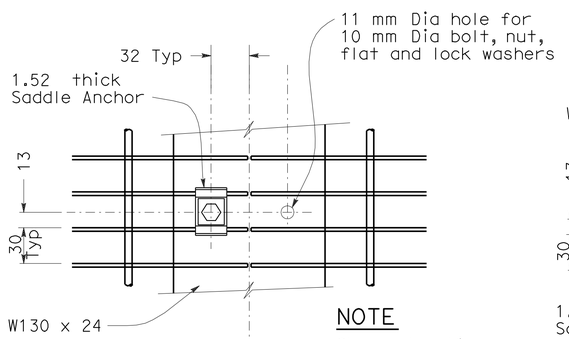

NOTE
Shown at splice

PLAN

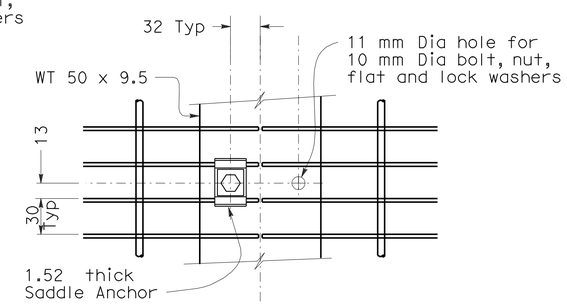

PLAN

NOTE
Shown at splice

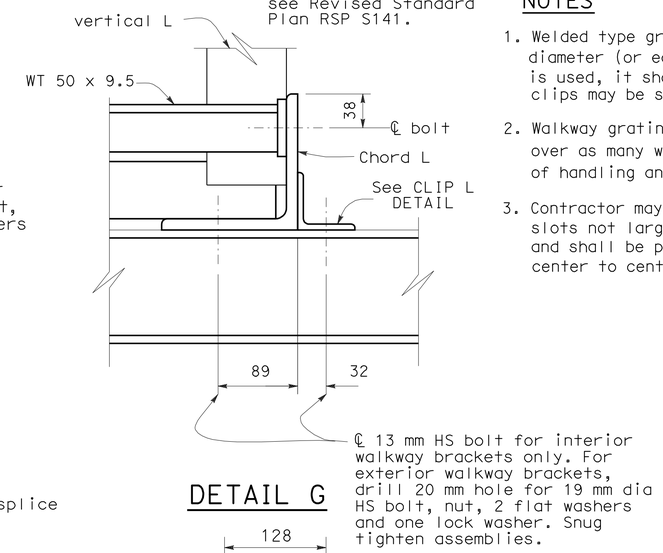

DETAIL G

NOTES

1. Welded type grating shall have 32 x 3 bearing bars at 30 mm centers with 6 mm diameter (or equal) cross bars at 102 mm centers. If mechanical lock grating is used, it shall be equal in strength to the welded type. Alternate hold-down clips may be submitted forapproval.
2. Walkway grating and light fixture mounting channels to be continuous (no splices) over as many walkway brackets as practical and consistent with fabrication, ease of handling and assembly.
3. Contractor may substitute 41 x 41 x 2.753 cont-slot steel channel with pre-punched slots not larger than 10 mm x 77 mm. Slots shall be at bottom of channel and shall be parallel to channel. Slots shall be spaced not closer than 100 mm center to center.

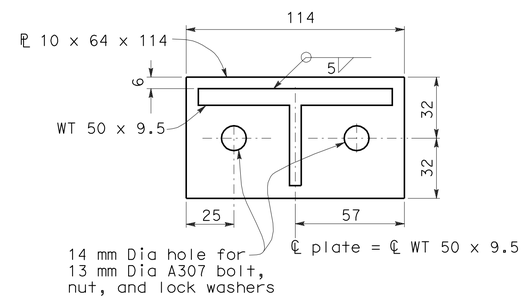

END PLATE CONNECTOR DETAIL

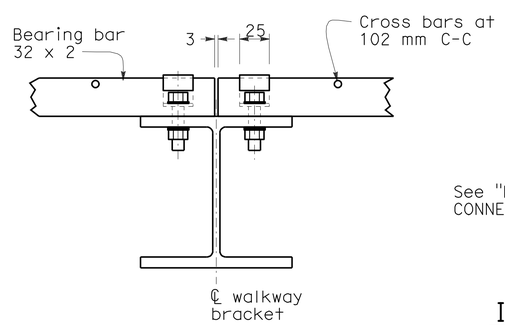

SECTION C-C

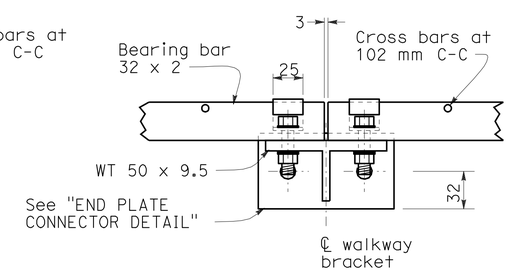

SECTION D-D

EXTERIOR WALKWAY GRATING DETAILS

INTERIOR WALKWAY GRATING DETAILS

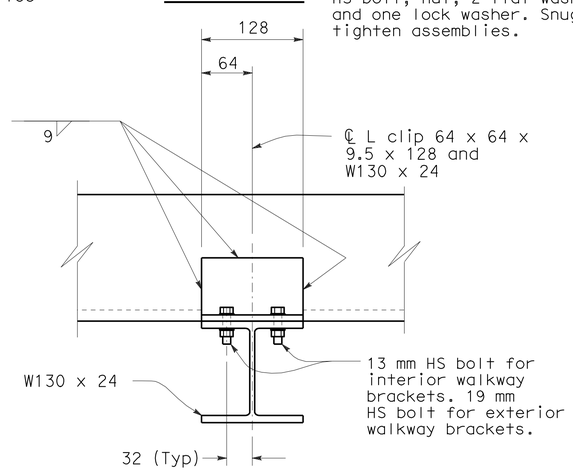

CLIP L DETAIL

STATE OF CALIFORNIA
DEPARTMENT OF TRANSPORTATION

OVERHEAD SIGN-TRUSS SINGLE POST TYPE WALKWAY DETAILS CHANGEABLE MESSAGE SIGNS MODEL 500

NO SCALE

ALL DIMENSIONS ARE IN MILLIMETERS UNLESS OTHERWISE SHOWN

RSP S114 DATED JANUARY 24, 2005 SUPERSEDES STANDARD PLAN S114 DATED JULY 1, 2004-PAGE 391 OF THE STANDARD PLANS BOOK DATED JULY 2004.

REVISED STANDARD PLAN RSP S114