DS No.	FOR MORE INFORMATION SEE SHEET		
⬡	D-	DD-	ECD-
48	16	3	-

Dist	COUNTY	ROUTE	KILOMETER POST TOTAL PROJECT	SHEET No.	TOTAL SHEETS
01	Men	101	R69.4/R78.9	301	939

Mitch Andrus 9-22-11
REGISTERED CIVIL ENGINEER DATE

1-23-12
PLANS APPROVAL DATE

REGISTERED PROFESSIONAL ENGINEER MITCH ANDRUS No. C48753 Exp. 9-30-12 CIVIL STATE OF CALIFORNIA

THE STATE OF CALIFORNIA OR ITS OFFICERS OR AGENTS SHALL NOT BE RESPONSIBLE FOR THE ACCURACY OR COMPLETENESS OF ELECTRONIC COPIES OF THIS PLAN SHEET.

Caltrans Metric

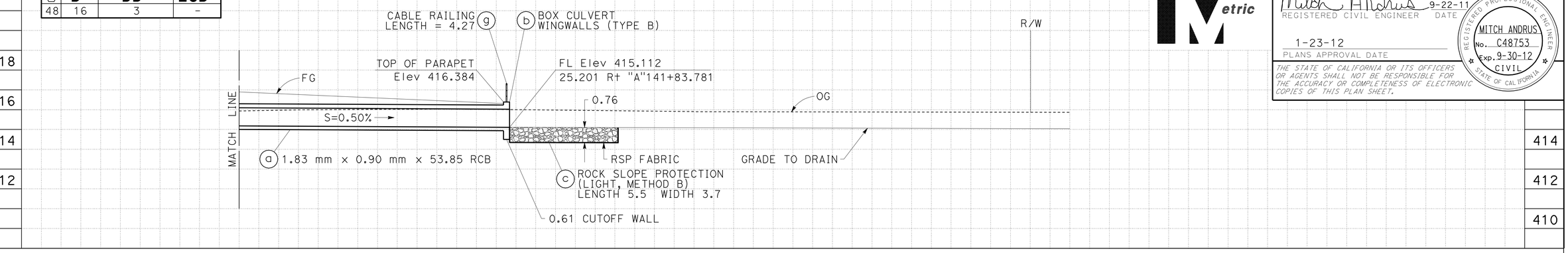

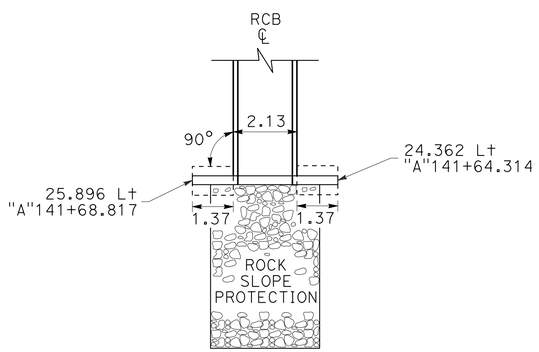

PARTIAL PLAN

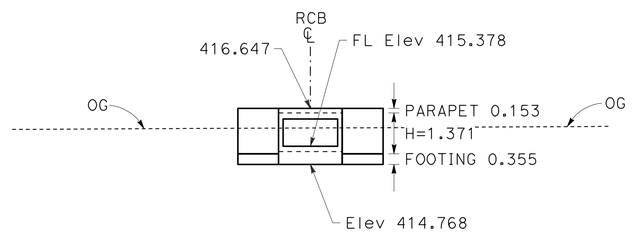

ELEVATION
48 (f)

BOX CULVERT WINGWALLS (TYPE B)
INLET
25.753 Lt "A"141+66.365
NO SCALE

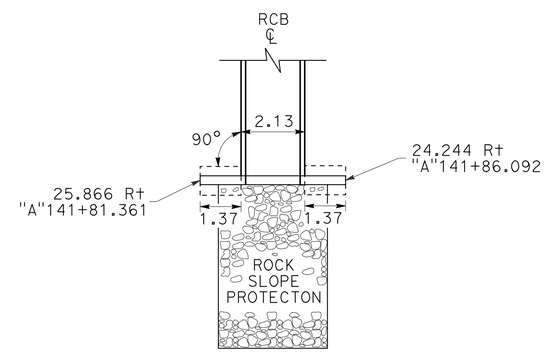

PARTIAL PLAN

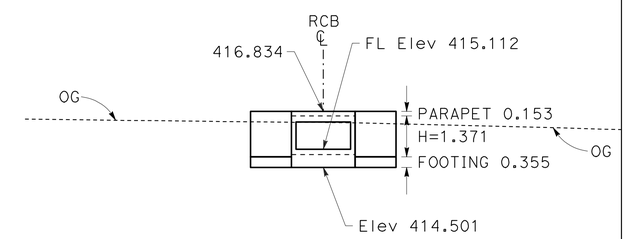

ELEVATION
48 (b)

BOX CULVERT WINGWALLS (TYPE B)
OUTLET
25.201 Rt "A"141+83.781
NO SCALE

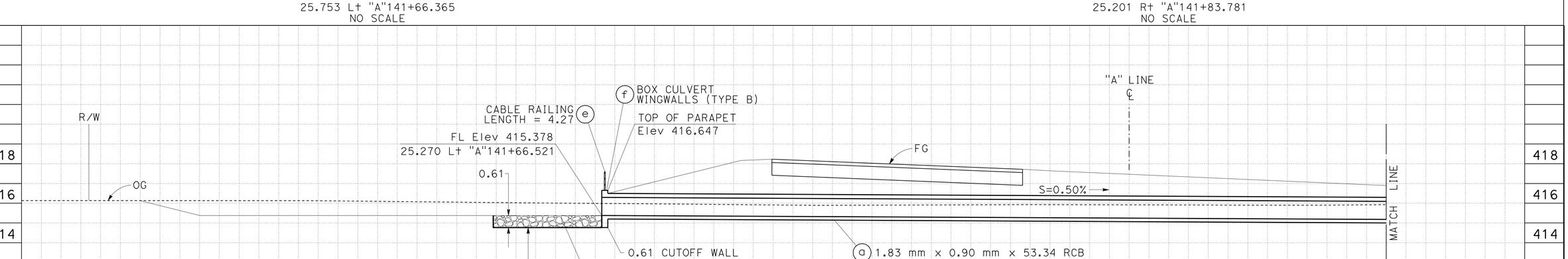

DRAINAGE SYSTEM 48
"A"141+74.906
18.87° SKEW

APPROVED FOR DRAINAGE WORK ONLY.

ALL DIMENSIONS ARE IN METERS UNLESS OTHERWISE SHOWN

DRAINAGE PROFILES

SCALE: Horiz 1:100
Vert 1:100

DP-27

REVISED BY	DATE REVISED
GMA	05-31-11

SCOTT FOSTER — CALCULATED-DESIGNED BY
KAO THAO — CHECKED BY
DOUGLAS S. JONES — FUNCTIONAL SUPERVISOR

STATE OF CALIFORNIA - DEPARTMENT OF TRANSPORTATION
Caltrans 03-DESIGN EAST

LAST REVISION 08-10-11 DATE PLOTTED => 28-JAN-2012 TIME PLOTTED => 06:54

Dist	COUNTY	ROUTE	KILOMETER POST TOTAL PROJECT	SHEET No.	TOTAL SHEETS
01	Men	101	R69.4/R78.9	302	939

Mitch Andrus 9-22-11
REGISTERED CIVIL ENGINEER DATE

1-23-12
PLANS APPROVAL DATE

REGISTERED PROFESSIONAL ENGINEER MITCH ANDRUS No. C48753 Exp. 9-30-12 CIVIL STATE OF CALIFORNIA

THE STATE OF CALIFORNIA OR ITS OFFICERS OR AGENTS SHALL NOT BE RESPONSIBLE FOR THE ACCURACY OR COMPLETENESS OF ELECTRONIC COPIES OF THIS PLAN SHEET.

Caltrans Metric

DS No.	FOR MORE INFORMATION SEE SHEET		
⬡	D-	DD-	ECD-
49	17	1,7,11,12	2

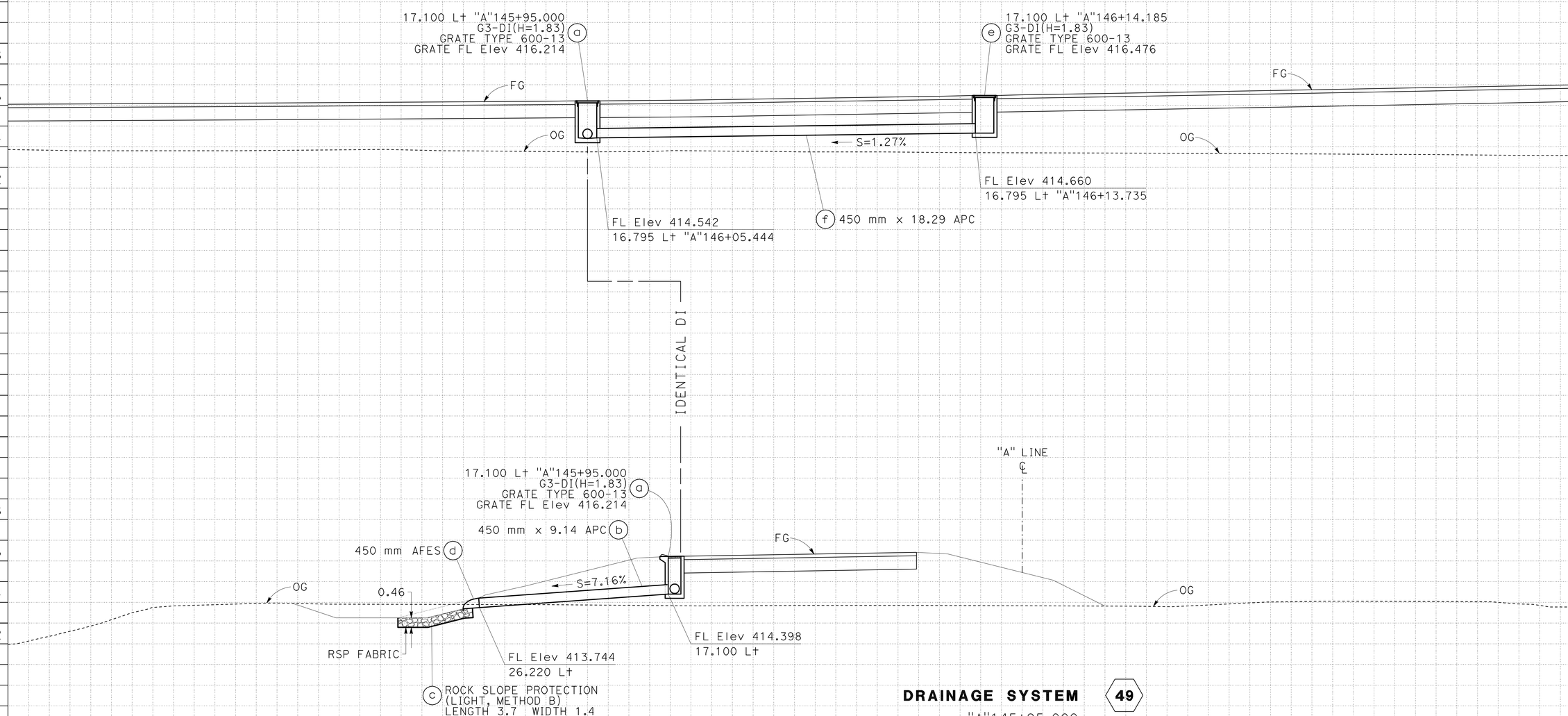

DRAINAGE SYSTEM (49)
"A"145+95.000
NO SKEW

APPROVED FOR DRAINAGE WORK ONLY.

ALL DIMENSIONS ARE IN METERS
UNLESS OTHERWISE SHOWN

DRAINAGE PROFILES

SCALE: Horiz 1:100
Vert 1:100

DP-28

GMA	REVISED BY	05-31-11 DATE REVISED
SCOTT FOSTER	KAO THAO	
CALCULATED-DESIGNED BY	CHECKED BY	
FUNCTIONAL SUPERVISOR	DOUGLAS S. JONES	

STATE OF CALIFORNIA - DEPARTMENT OF TRANSPORTATION
Caltrans 03-DESIGN EAST

LAST REVISION 08-10-11 DATE PLOTTED => 28-JAN-2012 TIME PLOTTED => 06:54

Dist	COUNTY	ROUTE	KILOMETER POST TOTAL PROJECT	SHEET No.	TOTAL SHEETS
01	Men	101	R69.4/R78.9	303	939

Caltrans Metric

Mitch Andrus 9-22-11
REGISTERED CIVIL ENGINEER DATE

1-23-12
PLANS APPROVAL DATE

REGISTERED PROFESSIONAL ENGINEER MITCH ANDRUS No. C48753 Exp. 9-30-12 CIVIL STATE OF CALIFORNIA

THE STATE OF CALIFORNIA OR ITS OFFICERS OR AGENTS SHALL NOT BE RESPONSIBLE FOR THE ACCURACY OR COMPLETENESS OF ELECTRONIC COPIES OF THIS PLAN SHEET.

DS No.	FOR MORE INFORMATION SEE SHEET		
⬡	D-	DD-	ECD-
50	17,18	1,7,11,12	-

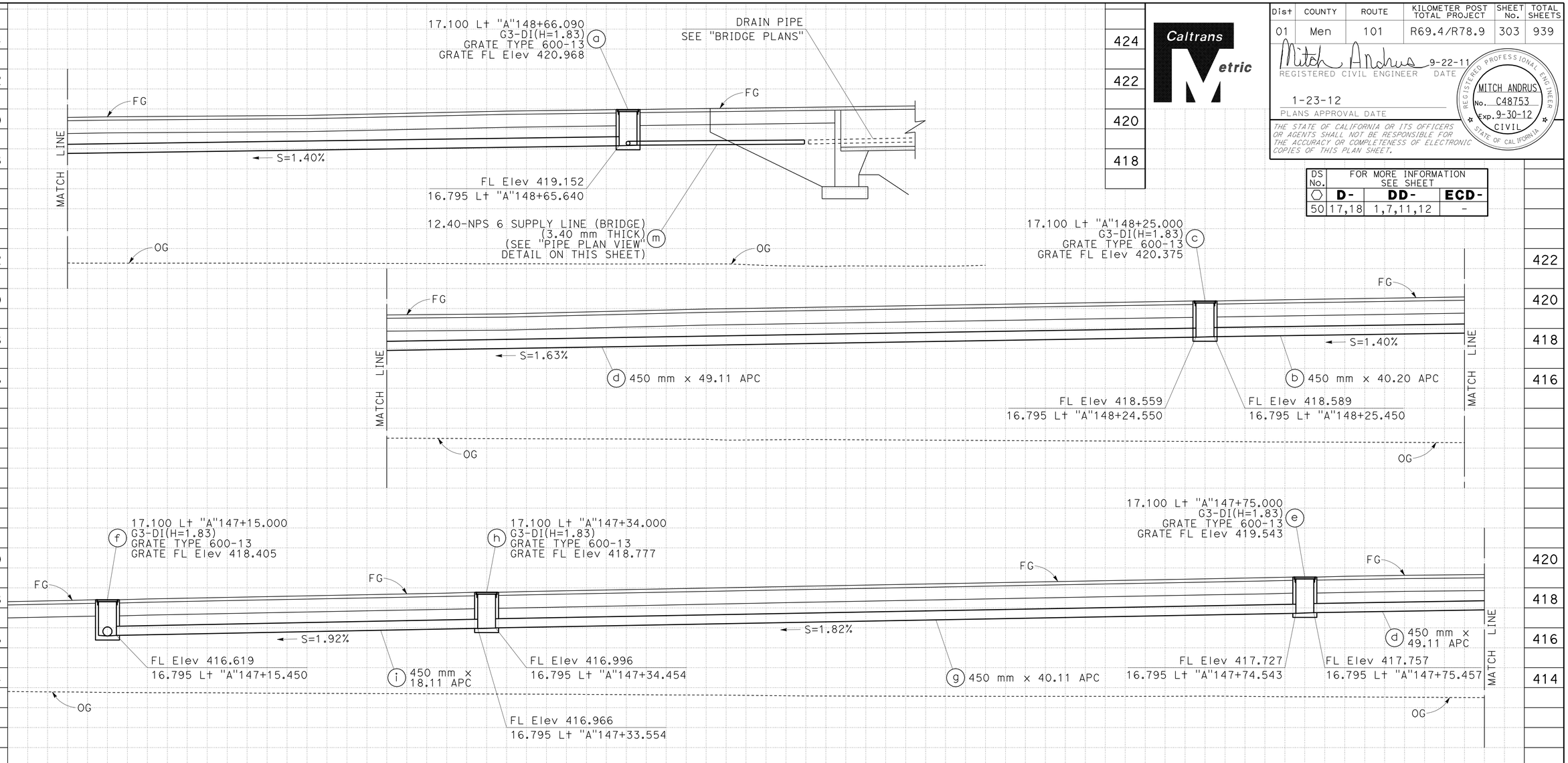

APPROVED FOR DRAINAGE WORK ONLY.

DRAINAGE SYSTEM (50)

"A"147+15.000
NO SKEW

ALL DIMENSIONS ARE IN METERS
UNLESS OTHERWISE SHOWN

DRAINAGE PROFILES

SCALE: Horiz 1:100
Vert 1:100

DP-29

GMA	05-31-11	REVISED BY	DATE REVISED
SCOTT FOSTER	KAO THAO	CALCULATED-DESIGNED BY	CHECKED BY
FUNCTIONAL SUPERVISOR	DOUGLAS S. JONES		

STATE OF CALIFORNIA - DEPARTMENT OF TRANSPORTATION
Caltrans 03-DESIGN EAST

LAST REVISION 08-10-11 DATE PLOTTED => 28-JAN-2012 TIME PLOTTED => 09:59

Dist	COUNTY	ROUTE	KILOMETER POST TOTAL PROJECT	SHEET No.	TOTAL SHEETS
01	Men	101	R69.4/R78.9	304	939

Caltrans Metric

Mitch Andrus 9-22-11
REGISTERED CIVIL ENGINEER DATE

1-23-12
PLANS APPROVAL DATE

REGISTERED PROFESSIONAL ENGINEER MITCH ANDRUS No. C48753 Exp. 9-30-12 CIVIL STATE OF CALIFORNIA

THE STATE OF CALIFORNIA OR ITS OFFICERS OR AGENTS SHALL NOT BE RESPONSIBLE FOR THE ACCURACY OR COMPLETENESS OF ELECTRONIC COPIES OF THIS PLAN SHEET.

DS No.	FOR MORE INFORMATION SEE SHEET		
⬡	D-	DD-	ECD-
51	18	3,11,16,17	-

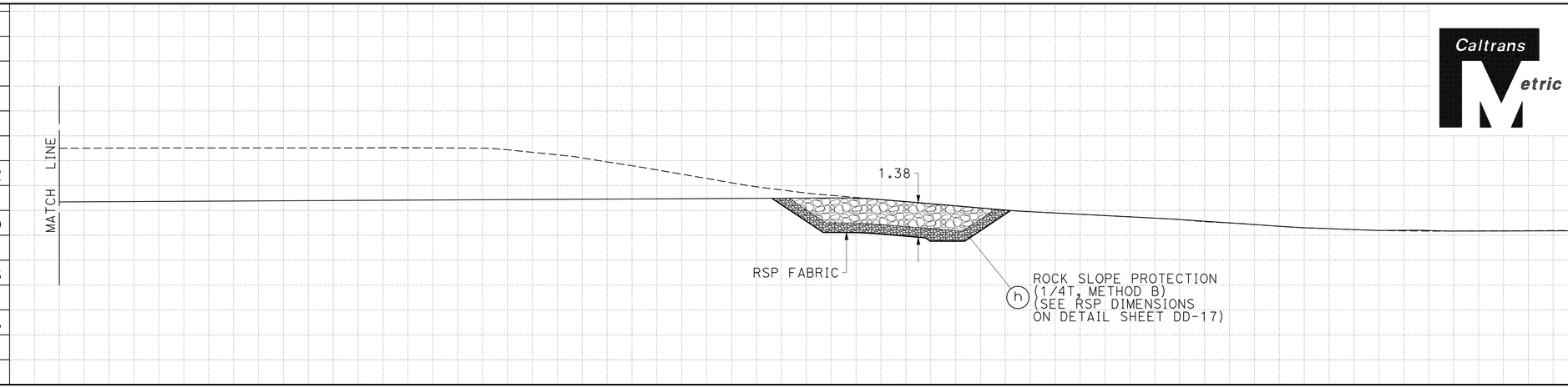

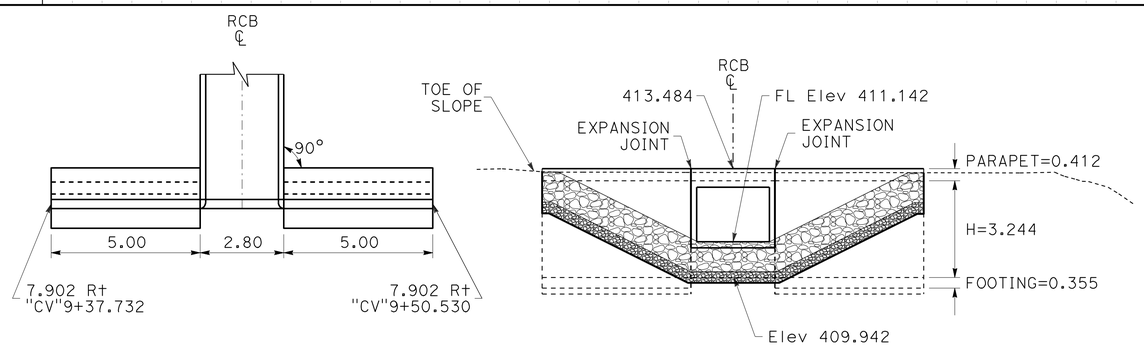

PARTIAL PLAN

ELEVATION

51 — b

BOX CULVERT WINGWALLS (TYPE B)
INLET
8.055 Rt "CV"9+44.131
NO SCALE

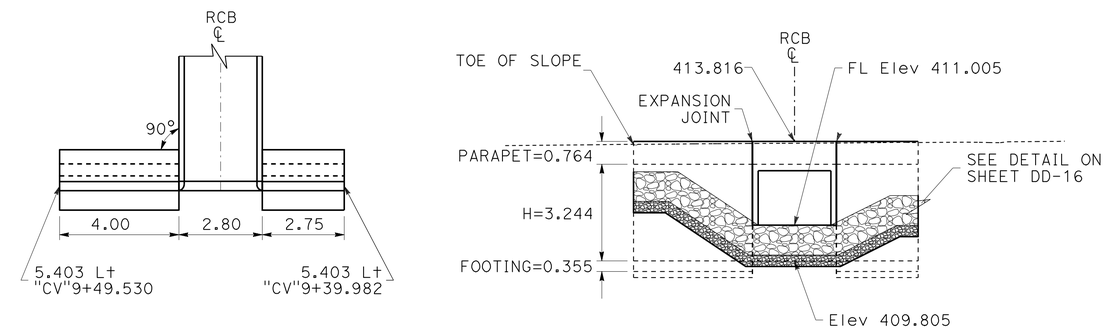

PARTIAL PLAN

ELEVATION

51 — e

BOX CULVERT WINGWALLS (TYPE B)
OUTLET
5.555 Lt "CV"9+44.131
NO SCALE

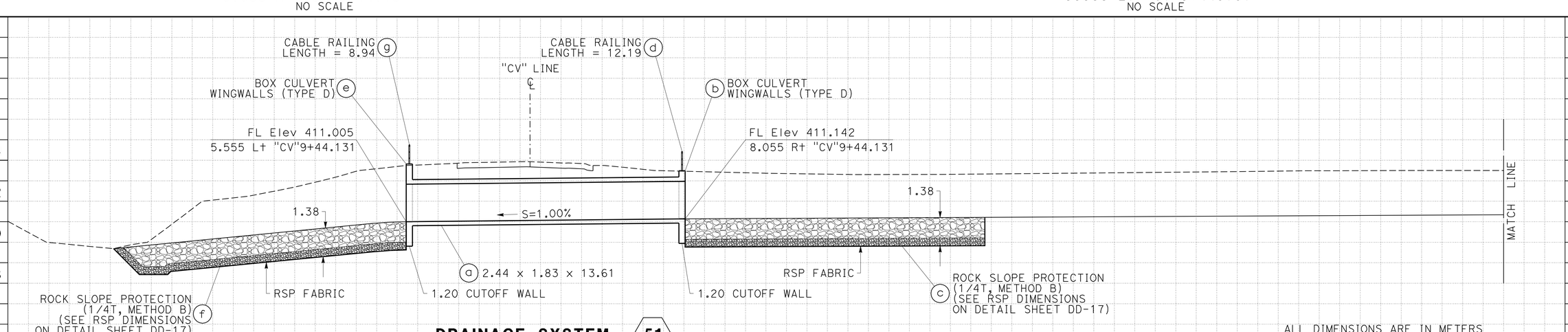

DRAINAGE SYSTEM 51
"CV"9+44.131
NO SKEW

APPROVED FOR DRAINAGE WORK ONLY.

ALL DIMENSIONS ARE IN METERS
UNLESS OTHERWISE SHOWN

DRAINAGE PROFILES

SCALE: Horiz 1:100
Vert 1:100

DP-30

REVISED BY	GMA
DATE REVISED	05-31-11
CALCULATED-DESIGNED BY	SCOTT FOSTER
CHECKED BY	KAO THAO
FUNCTIONAL SUPERVISOR	DOUGLAS S. JONES

STATE OF CALIFORNIA - DEPARTMENT OF TRANSPORTATION
Caltrans 03-DESIGN EAST

LAST REVISION 08-10-11
DATE PLOTTED => 28-JAN-2012
TIME PLOTTED => 06:55

Dist	COUNTY	ROUTE	KILOMETER POST TOTAL PROJECT	SHEET No.	TOTAL SHEETS
01	Men	101	R69.4/R78.9	305	939

Mitch Andrus 9-22-11
REGISTERED CIVIL ENGINEER DATE

1-23-12
PLANS APPROVAL DATE

REGISTERED PROFESSIONAL ENGINEER MITCH ANDRUS No. C48753 Exp. 9-30-12 CIVIL STATE OF CALIFORNIA

THE STATE OF CALIFORNIA OR ITS OFFICERS OR AGENTS SHALL NOT BE RESPONSIBLE FOR THE ACCURACY OR COMPLETENESS OF ELECTRONIC COPIES OF THIS PLAN SHEET.

Caltrans Metric

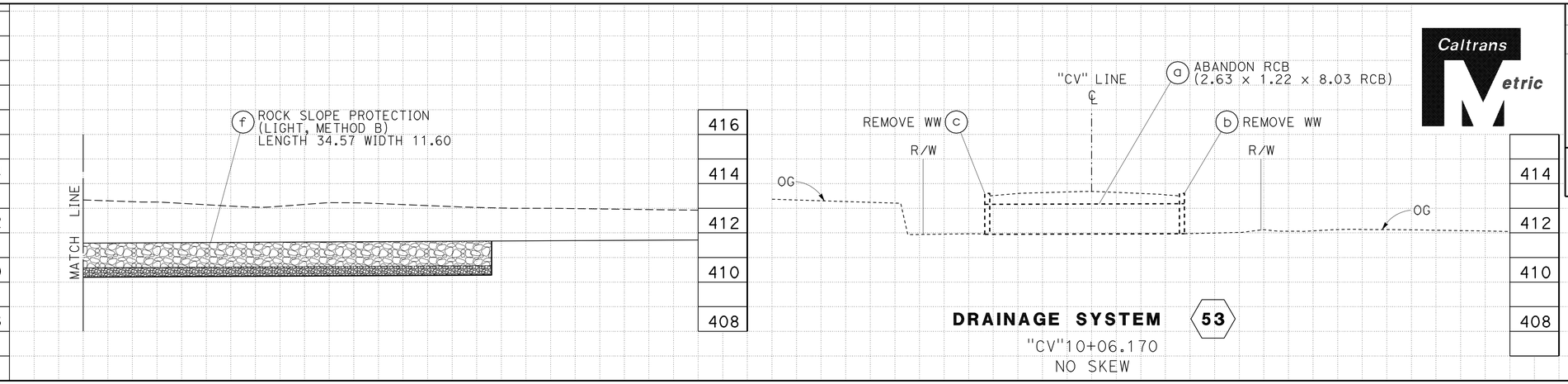

DRAINAGE SYSTEM 53
"CV"10+06.170
NO SKEW

DS No.	FOR MORE INFORMATION SEE SHEET		
⬡	D-	DD-	ECD-
52	18	3,11,18	-
53	18	-	-

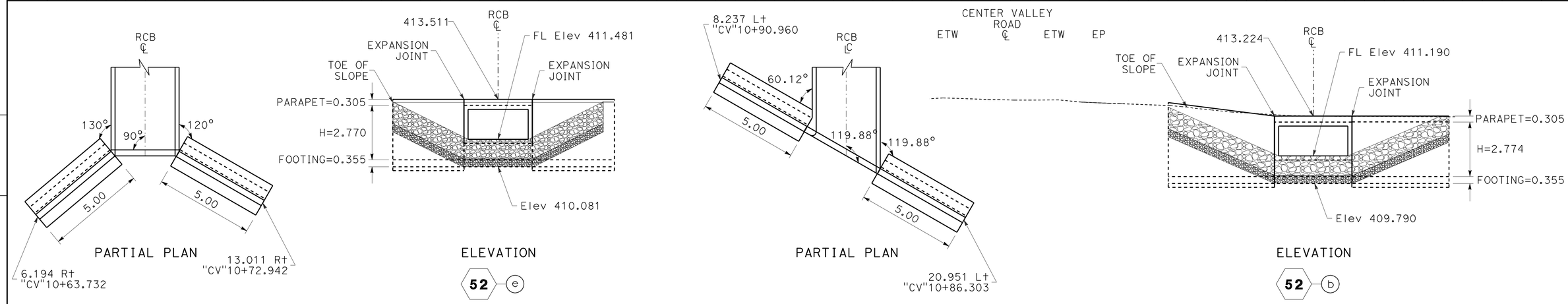

BOX CULVERT WINGWALLS (TYPE B)
INLET
7.327 Rt "CV"10+69.900
NO SCALE

Note:
FOR WINGWALL DETAILS NOT SHOWN,
SEE STANDARD PLANS RSP D82 & RSP D84.

BOX CULVERT WINGWALLS (TYPE B)
OUTLET
15.009 Lt "CV"10+88.642
NO SCALE

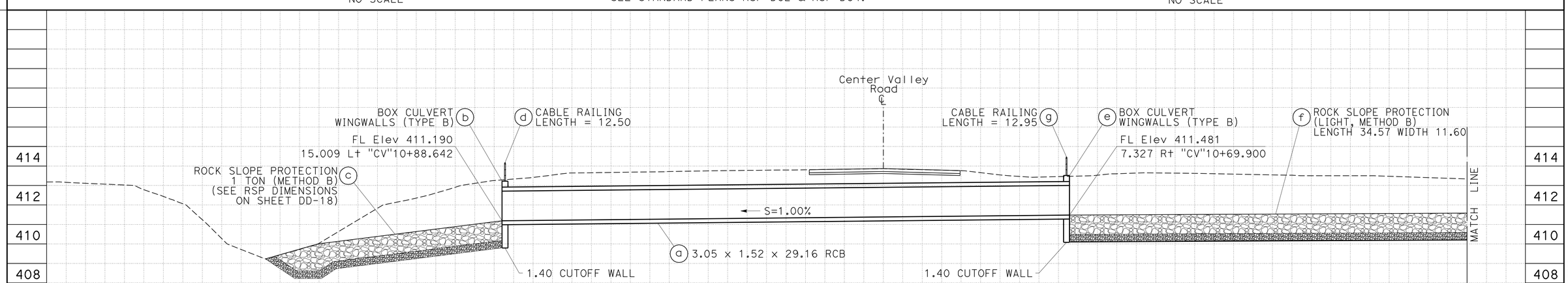

52 **DRAINAGE SYSTEM**
"CV"31+54.325
NO SKEW

APPROVED FOR DRAINAGE WORK ONLY.

ALL DIMENSIONS ARE IN METERS
UNLESS OTHERWISE SHOWN

DRAINAGE PROFILES

SCALE: Horiz 1:100
Vert 1:100

DP-31

GMA	05-31-11	SCOTT FOSTER	KAO THAO
REVISED BY	DATE REVISED	CALCULATED-DESIGNED BY	CHECKED BY
FUNCTIONAL SUPERVISOR	DOUGLAS S. JONES		

STATE OF CALIFORNIA - DEPARTMENT OF TRANSPORTATION
Caltrans 03-DESIGN EAST

LAST REVISION 05-30-11 DATE PLOTTED => 28-JAN-2012 TIME PLOTTED => 10:02

Dist	COUNTY	ROUTE	KILOMETER POST TOTAL PROJECT	SHEET No.	TOTAL SHEETS
01	Men	101	R69.4/R78.9	306	939

Mitch Andrus 9-22-11
REGISTERED CIVIL ENGINEER DATE

1-23-12
PLANS APPROVAL DATE

REGISTERED PROFESSIONAL ENGINEER MITCH ANDRUS No. C48753 Exp. 9-30-12 CIVIL STATE OF CALIFORNIA

THE STATE OF CALIFORNIA OR ITS OFFICERS OR AGENTS SHALL NOT BE RESPONSIBLE FOR THE ACCURACY OR COMPLETENESS OF ELECTRONIC COPIES OF THIS PLAN SHEET.

Caltrans Metric

DS No.	FOR MORE INFORMATION SEE SHEET		
	D-	DD-	ECD-
54	23	1,6,7,10,11	1

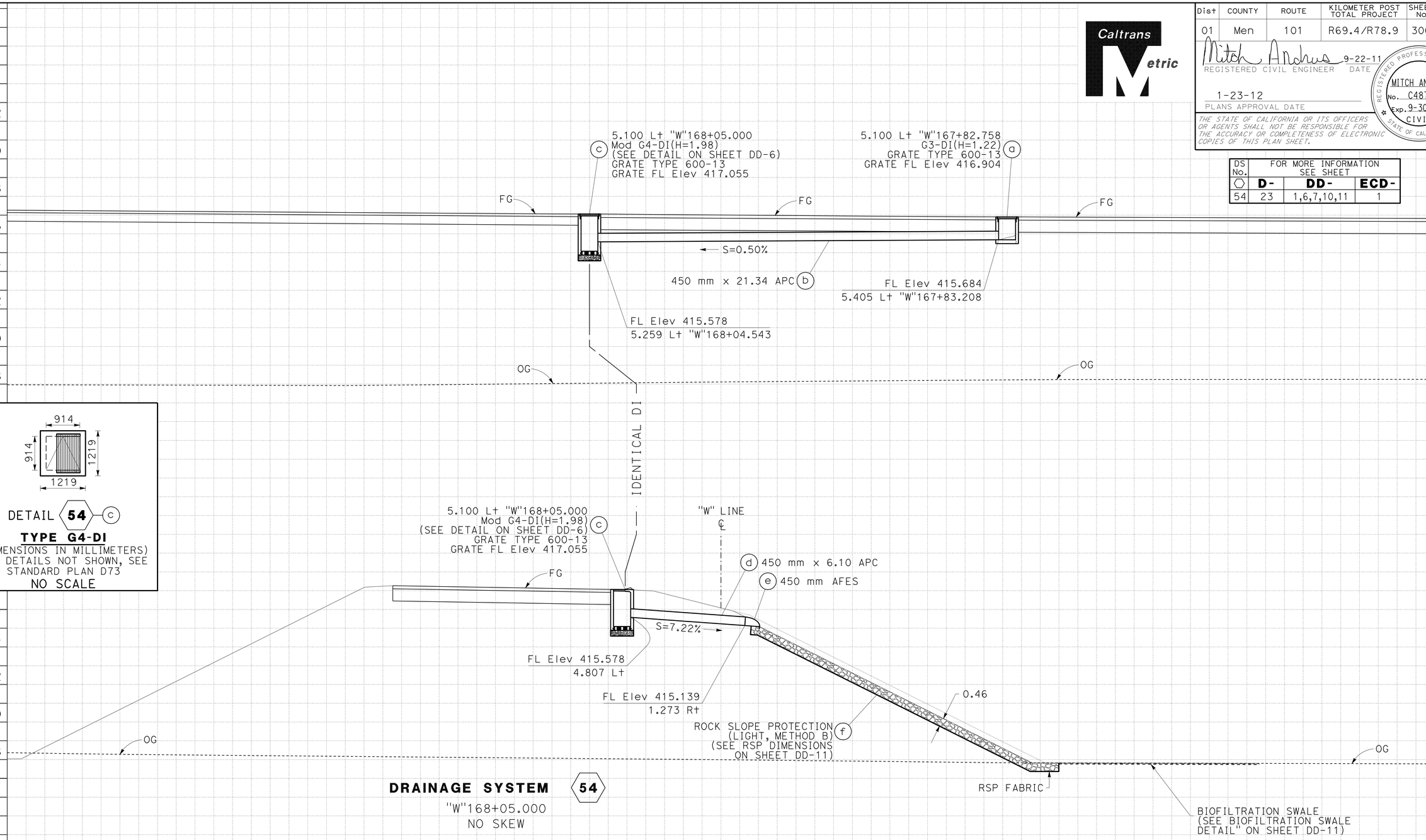

DETAIL 54 c

TYPE G4-DI

(DIMENSIONS IN MILLIMETERS)
FOR DETAILS NOT SHOWN, SEE
STANDARD PLAN D73
NO SCALE

DRAINAGE SYSTEM 54

"W"168+05.000
NO SKEW

APPROVED FOR DRAINAGE WORK ONLY.

ALL DIMENSIONS ARE IN METERS
UNLESS OTHERWISE SHOWN

DRAINAGE PROFILES

SCALE: Horiz 1:100
Vert 1:100

DP-32

REVISED BY	DATE REVISED
GMA	05-31-11

CALCULATED-DESIGNED BY: SCOTT FOSTER
CHECKED BY: KAO THAO
FUNCTIONAL SUPERVISOR: DOUGLAS S. JONES

STATE OF CALIFORNIA - DEPARTMENT OF TRANSPORTATION
Caltrans 03-DESIGN EAST

LAST REVISION 08-10-11 DATE PLOTTED => 28-JAN-2012 TIME PLOTTED => 06:55

DS No.	FOR MORE INFORMATION SEE SHEET		
⬡	D-	DD-	ECD-
55	23	2,3	-
56	24	1,6,7,10,11	1

Dist	COUNTY	ROUTE	KILOMETER POST TOTAL PROJECT	SHEET No.	TOTAL SHEETS
01	Men	101	R69.4/R78.9	307	939

Mitch Andrus 9-22-11
REGISTERED CIVIL ENGINEER DATE

1-23-12
PLANS APPROVAL DATE

REGISTERED PROFESSIONAL ENGINEER MITCH ANDRUS No. C48753 Exp. 9-30-12 CIVIL STATE OF CALIFORNIA

THE STATE OF CALIFORNIA OR ITS OFFICERS OR AGENTS SHALL NOT BE RESPONSIBLE FOR THE ACCURACY OR COMPLETENESS OF ELECTRONIC COPIES OF THIS PLAN SHEET.

Caltrans Metric

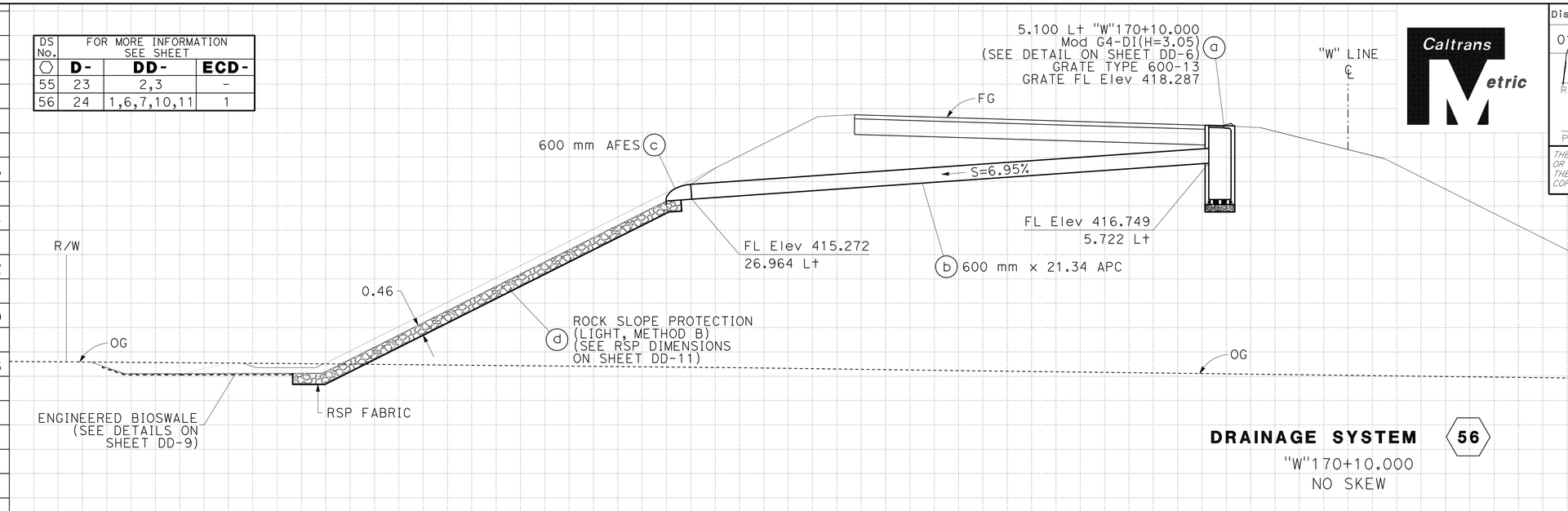

DRAINAGE SYSTEM (56)
"W"170+10.000
NO SKEW

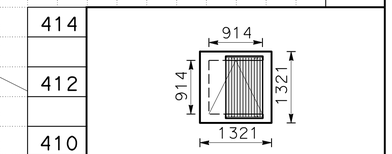

DETAIL (56)-(a)
TYPE G4-DI
(DIMENSIONS IN MILLIMETERS)
FOR DETAILS NOT SHOWN, SEE
STANDARD PLAN D73
NO SCALE

DETAIL (55)-(b)-(e)
MODIFIED PIPE HEADWALL
(DIMENSIONS IN MILLIMETERS)
FOR DETAILS NOT SHOWN, SEE
STANDARD PLAN D89
NO SCALE

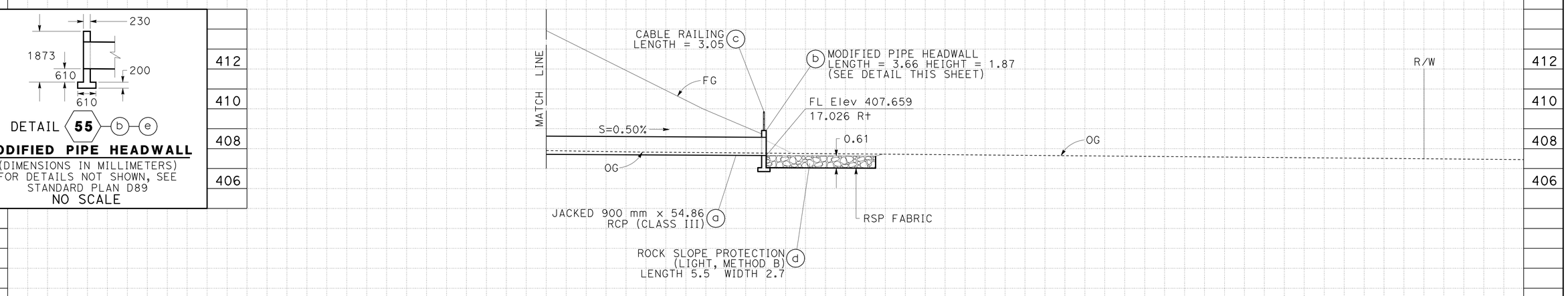

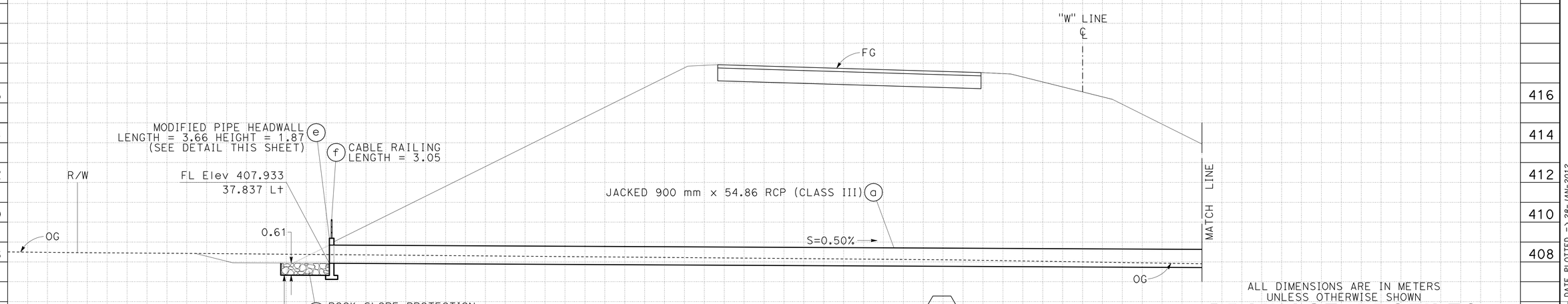

DRAINAGE SYSTEM (55)
"W"168+70.000
NO SKEW

APPROVED FOR DRAINAGE WORK ONLY.

ALL DIMENSIONS ARE IN METERS
UNLESS OTHERWISE SHOWN

DRAINAGE PROFILES

SCALE: Horiz 1:100
Vert 1:100

DP-33

GMA	05-31-11
REVISED BY	DATE REVISED
SCOTT FOSTER	KAO THAO
CALCULATED-DESIGNED BY	CHECKED BY
FUNCTIONAL SUPERVISOR	DOUGLAS S. JONES

STATE OF CALIFORNIA - DEPARTMENT OF TRANSPORTATION
Caltrans 03-DESIGN EAST

LAST REVISION 08-10-11 DATE PLOTTED => 28-JAN-2012 TIME PLOTTED => 06:55

DS No.	FOR MORE INFORMATION SEE SHEET		
⬡	D-	DD-	ECD-
57	24	2,3	-

Dist	COUNTY	ROUTE	KILOMETER POST TOTAL PROJECT	SHEET No.	TOTAL SHEETS
01	Men	101	R69.4/R78.9	308	939

Mitch Andrus 9-22-11
REGISTERED CIVIL ENGINEER DATE

1-23-12
PLANS APPROVAL DATE

REGISTERED PROFESSIONAL ENGINEER MITCH ANDRUS No. C48753 Exp. 9-30-12 CIVIL STATE OF CALIFORNIA

THE STATE OF CALIFORNIA OR ITS OFFICERS OR AGENTS SHALL NOT BE RESPONSIBLE FOR THE ACCURACY OR COMPLETENESS OF ELECTRONIC COPIES OF THIS PLAN SHEET.

Caltrans Metric

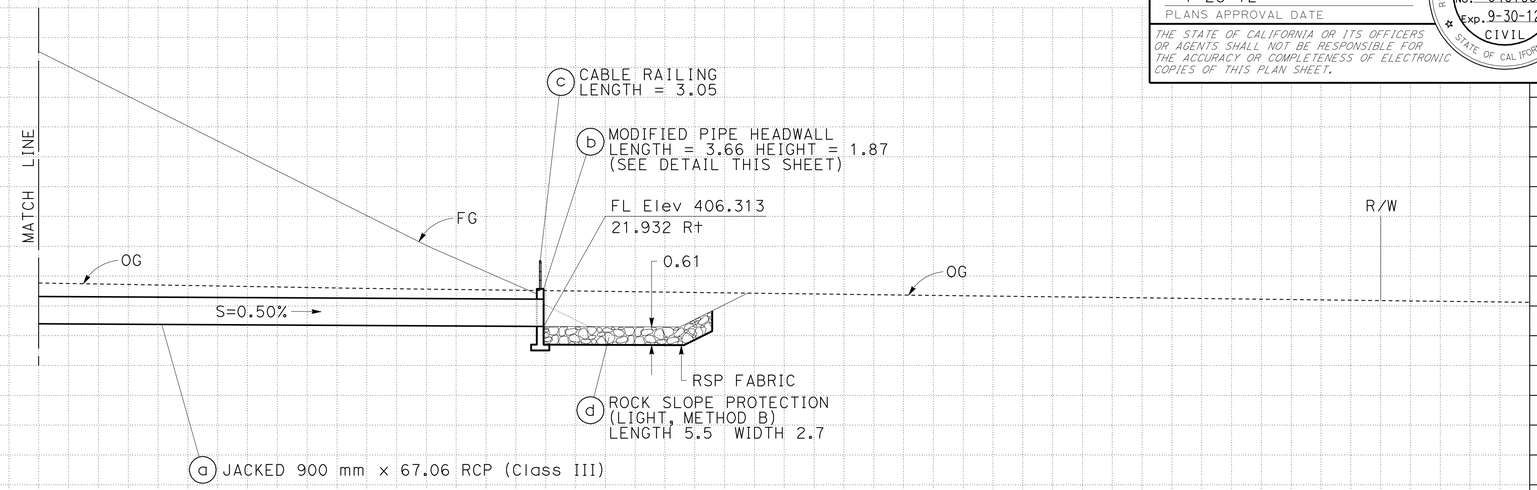

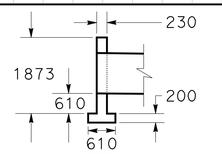

DETAIL 57 b g

MODIFIED PIPE HEADWALL

(DIMENSIONS IN MILLIMETERS)
FOR DETAILS NOT SHOWN, SEE STANDARD PLAN D89
NO SCALE

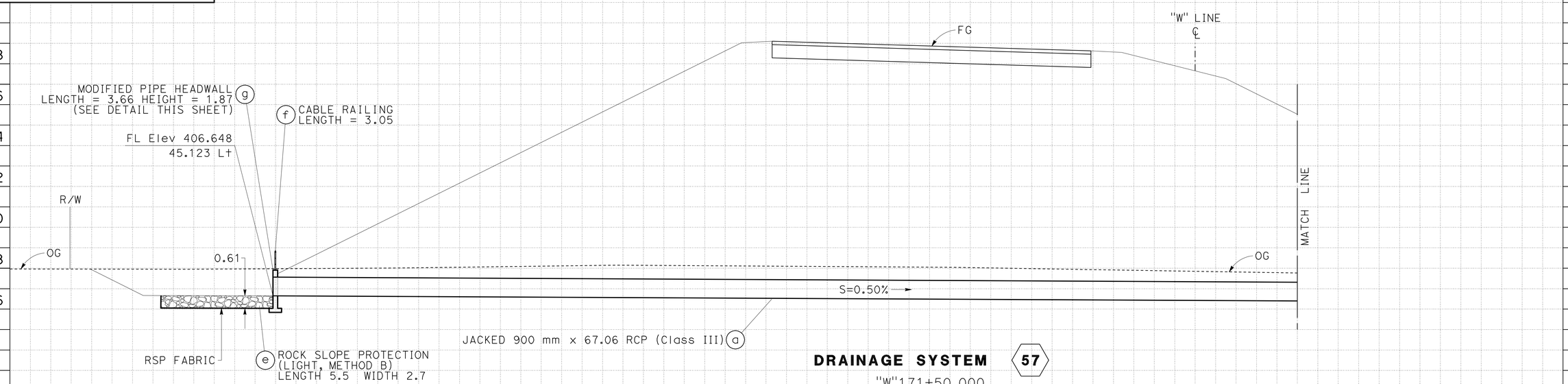

DRAINAGE SYSTEM 57

"W"171+50.000
NO SKEW

ALL DIMENSIONS ARE IN METERS
UNLESS OTHERWISE SHOWN

DRAINAGE PROFILES

SCALE: Horiz 1:100
Vert 1:100

APPROVED FOR DRAINAGE WORK ONLY.

DP-34

REVISED BY	DATE REVISED
GMA	05-31-11

SCOTT FOSTER — KAO THAO — CALCULATED-DESIGNED BY — CHECKED BY

FUNCTIONAL SUPERVISOR: DOUGLAS S. JONES

STATE OF CALIFORNIA - DEPARTMENT OF TRANSPORTATION
Caltrans 03-DESIGN EAST

LAST REVISION 08-10-11 DATE PLOTTED => 28-JAN-2012 TIME PLOTTED => 06:55

Dist	COUNTY	ROUTE	KILOMETER POST TOTAL PROJECT	SHEET No.	TOTAL SHEETS
01	Men	101	R69.4/R78.9	309	939

Caltrans Metric

Mitch Andrus 9-22-11
REGISTERED CIVIL ENGINEER DATE

1-23-12
PLANS APPROVAL DATE

REGISTERED PROFESSIONAL ENGINEER MITCH ANDRUS No. C48753 Exp. 9-30-12 CIVIL STATE OF CALIFORNIA

THE STATE OF CALIFORNIA OR ITS OFFICERS OR AGENTS SHALL NOT BE RESPONSIBLE FOR THE ACCURACY OR COMPLETENESS OF ELECTRONIC COPIES OF THIS PLAN SHEET.

DS No.	FOR MORE INFORMATION SEE SHEET		
⬡	D-	DD-	ECD-
58	25	2,3	-

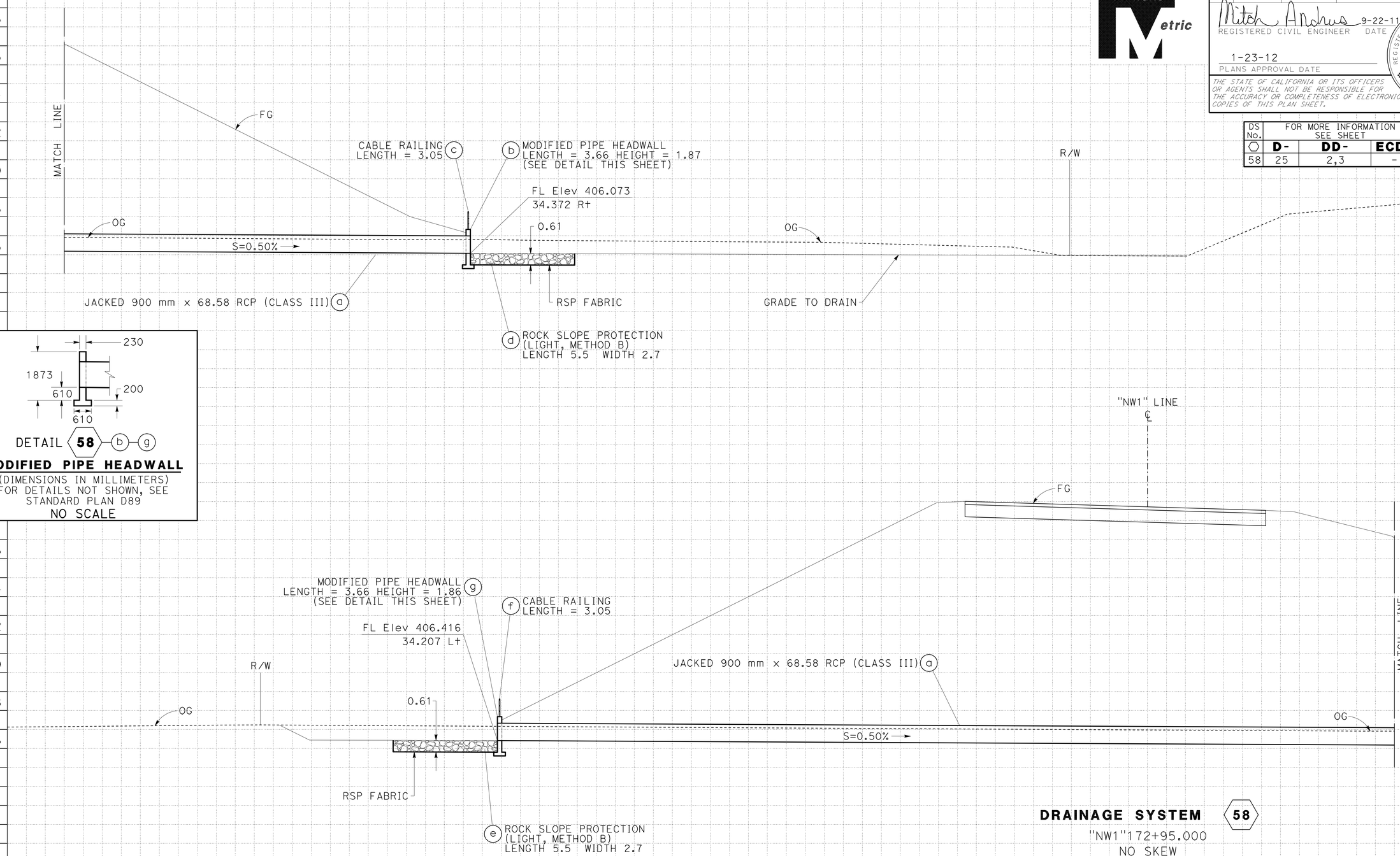

DETAIL 58 b g

MODIFIED PIPE HEADWALL

(DIMENSIONS IN MILLIMETERS)
FOR DETAILS NOT SHOWN, SEE
STANDARD PLAN D89
NO SCALE

DRAINAGE SYSTEM 58

"NW1"172+95.000
NO SKEW

ALL DIMENSIONS ARE IN METERS
UNLESS OTHERWISE SHOWN

DRAINAGE PROFILES

SCALE: Horiz 1:100
Vert 1:100

APPROVED FOR DRAINAGE WORK ONLY.

DP-35

REVISED BY	DATE REVISED
GMA	05-31-11

CALCULATED-DESIGNED BY: SCOTT FOSTER
CHECKED BY: KAO THAO
FUNCTIONAL SUPERVISOR: DOUGLAS S. JONES

STATE OF CALIFORNIA - DEPARTMENT OF TRANSPORTATION
Caltrans 03-DESIGN EAST

LAST REVISION 08-10-11
DATE PLOTTED => 28-JAN-2012
TIME PLOTTED => 06:55

DS No.	FOR MORE INFORMATION SEE SHEET		
⬡	D-	DD-	ECD-
59	25	1,6,7,9,11	-

Dist	COUNTY	ROUTE	KILOMETER POST TOTAL PROJECT	SHEET No.	TOTAL SHEETS
01	Men	101	R69.4/R78.9	310	939

Mitch Andrus 9-22-11
REGISTERED CIVIL ENGINEER DATE

1-23-12
PLANS APPROVAL DATE

REGISTERED PROFESSIONAL ENGINEER MITCH ANDRUS No. C48753 Exp. 9-30-12 CIVIL STATE OF CALIFORNIA

THE STATE OF CALIFORNIA OR ITS OFFICERS OR AGENTS SHALL NOT BE RESPONSIBLE FOR THE ACCURACY OR COMPLETENESS OF ELECTRONIC COPIES OF THIS PLAN SHEET.

Caltrans Metric

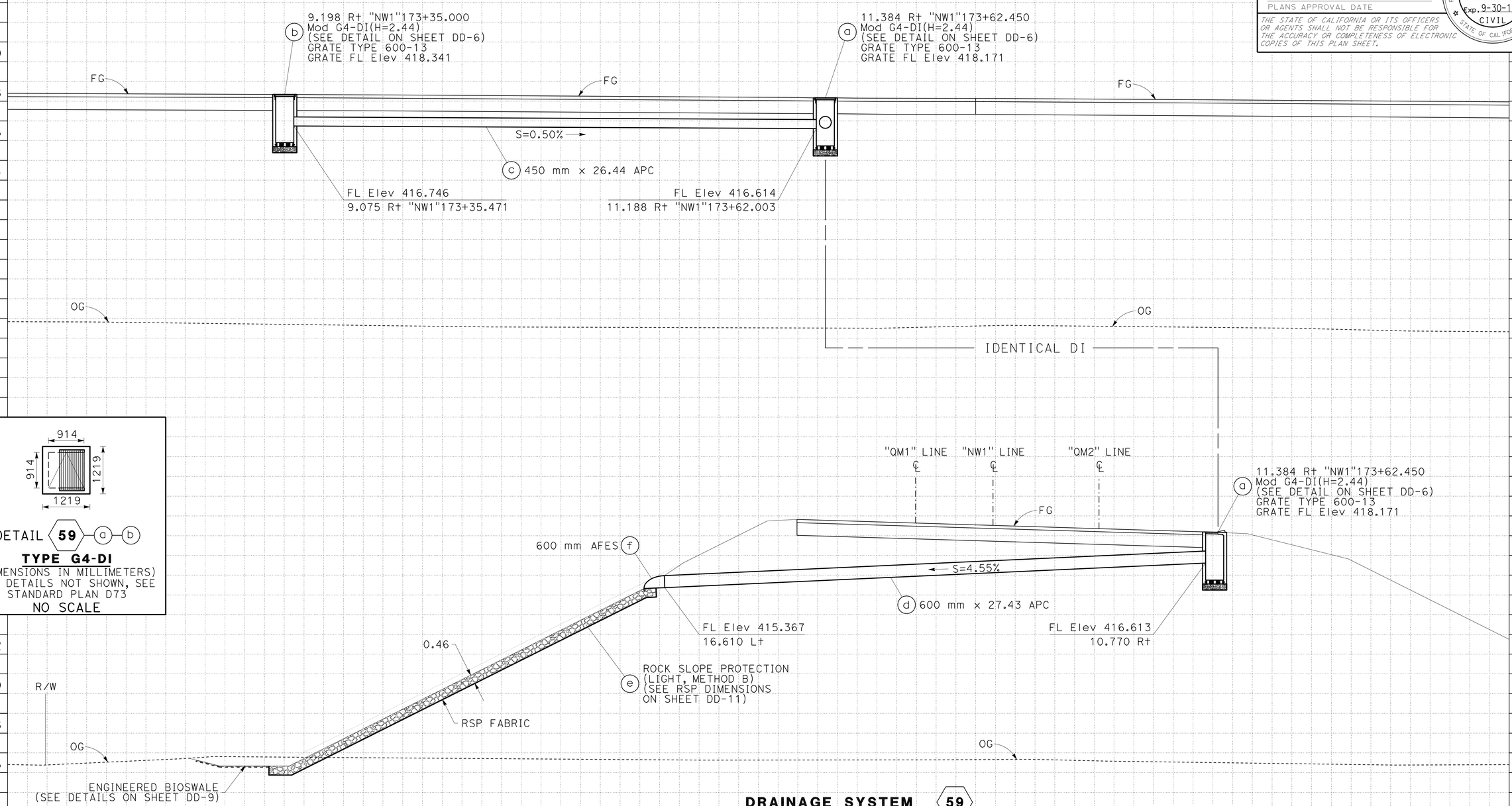

DETAIL 59 a b

TYPE G4-DI
(DIMENSIONS IN MILLIMETERS)
FOR DETAILS NOT SHOWN, SEE STANDARD PLAN D73
NO SCALE

DRAINAGE SYSTEM 59
"NW1"173+62.500
NO SKEW

APPROVED FOR DRAINAGE WORK ONLY.

ALL DIMENSIONS ARE IN METERS
UNLESS OTHERWISE SHOWN

DRAINAGE PROFILES

SCALE: Horiz 1:100
Vert 1:100

DP-36

REVISED BY	DATE REVISED
GMA	05-31-11

CALCULATED-DESIGNED BY: SCOTT FOSTER
CHECKED BY: KAO THAO
FUNCTIONAL SUPERVISOR: DOUGLAS S. JONES

STATE OF CALIFORNIA - DEPARTMENT OF TRANSPORTATION
Caltrans 03-DESIGN EAST

LAST REVISION 08-10-11 DATE PLOTTED => 28-JAN-2012 TIME PLOTTED => 06:56

Dist	COUNTY	ROUTE	KILOMETER POST TOTAL PROJECT	SHEET No.	TOTAL SHEETS
01	Men	101	R69.4/R78.9	311	939

Mitch Andrus 9-22-11
REGISTERED CIVIL ENGINEER DATE

1-23-12
PLANS APPROVAL DATE

REGISTERED PROFESSIONAL ENGINEER MITCH ANDRUS No. C48753 Exp. 9-30-12 CIVIL STATE OF CALIFORNIA

THE STATE OF CALIFORNIA OR ITS OFFICERS OR AGENTS SHALL NOT BE RESPONSIBLE FOR THE ACCURACY OR COMPLETENESS OF ELECTRONIC COPIES OF THIS PLAN SHEET.

Caltrans Metric

DS No.	FOR MORE INFORMATION SEE SHEET		
⬡	D-	DD-	ECD-
60	25	2,3	-

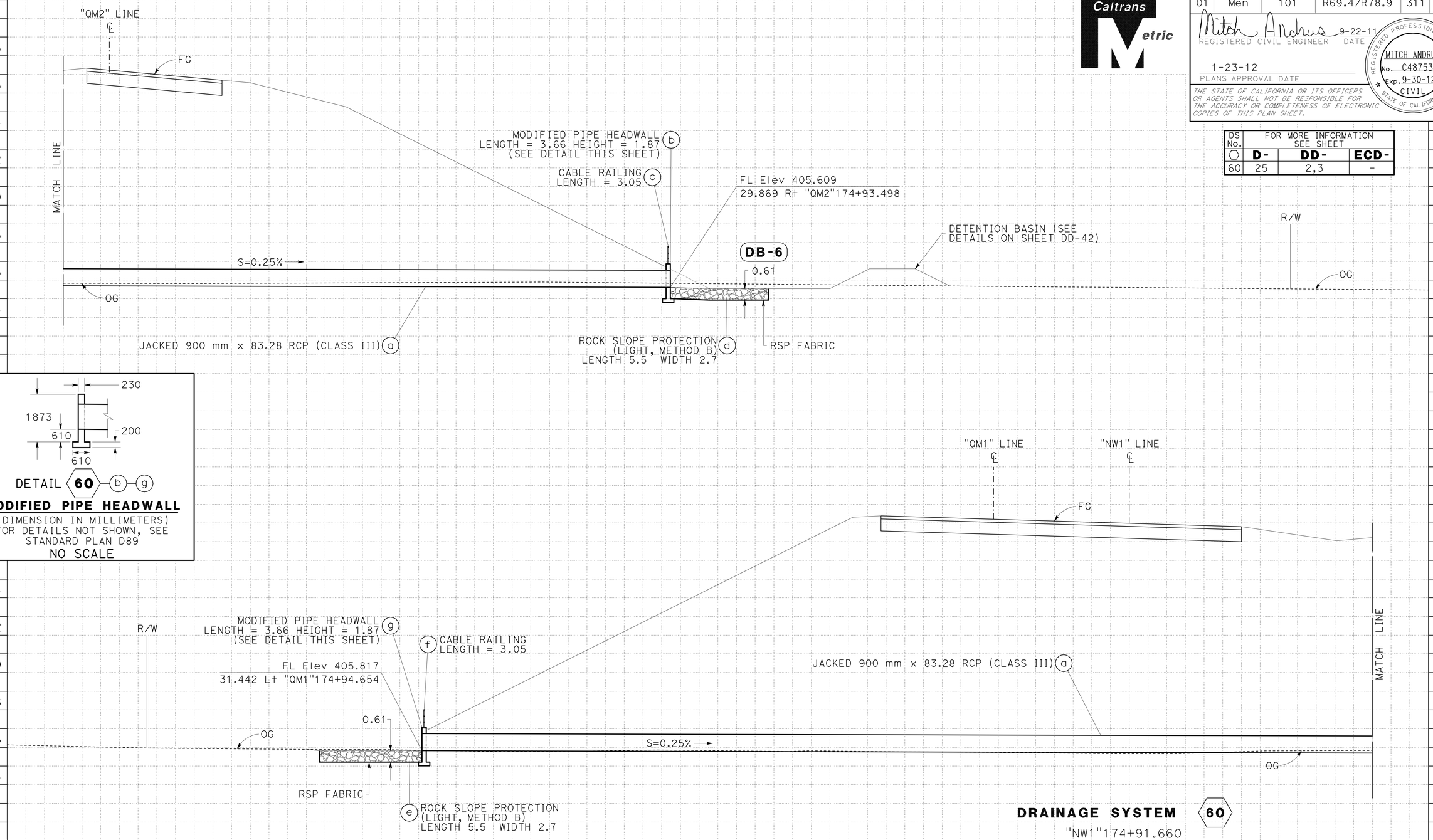

DETAIL 60 b g

MODIFIED PIPE HEADWALL

(DIMENSION IN MILLIMETERS)
FOR DETAILS NOT SHOWN, SEE STANDARD PLAN D89
NO SCALE

DRAINAGE SYSTEM 60

"NW1"174+91.660
NO SKEW

ALL DIMENSIONS ARE IN METERS
UNLESS OTHERWISE SHOWN

DRAINAGE PROFILES

SCALE: Horiz 1:100
Vert 1:100

APPROVED FOR DRAINAGE WORK ONLY.

DP-37

REVISED BY	DATE REVISED
GMA	05-31-11

SCOTT FOSTER — KAO THAO — CALCULATED-DESIGNED BY — CHECKED BY
FUNCTIONAL SUPERVISOR: DOUGLAS S. JONES

STATE OF CALIFORNIA - DEPARTMENT OF TRANSPORTATION
Caltrans 03-DESIGN EAST

LAST REVISION 08-10-11 DATE PLOTTED => 28-JAN-2012 TIME PLOTTED => 06:56

Dist	COUNTY	ROUTE	KILOMETER POST TOTAL PROJECT	SHEET No.	TOTAL SHEETS
01	Men	101	R69.4/R78.9	312	939

Mitch Andrus 9-22-11
REGISTERED CIVIL ENGINEER DATE

1-23-12
PLANS APPROVAL DATE

REGISTERED PROFESSIONAL ENGINEER MITCH ANDRUS No. C48753 Exp. 9-30-12 CIVIL STATE OF CALIFORNIA

THE STATE OF CALIFORNIA OR ITS OFFICERS OR AGENTS SHALL NOT BE RESPONSIBLE FOR THE ACCURACY OR COMPLETENESS OF ELECTRONIC COPIES OF THIS PLAN SHEET.

Caltrans Metric

DS No.	FOR MORE INFORMATION SEE SHEET		
⬡	D-	DD-	ECD-
64	25	2,3	-

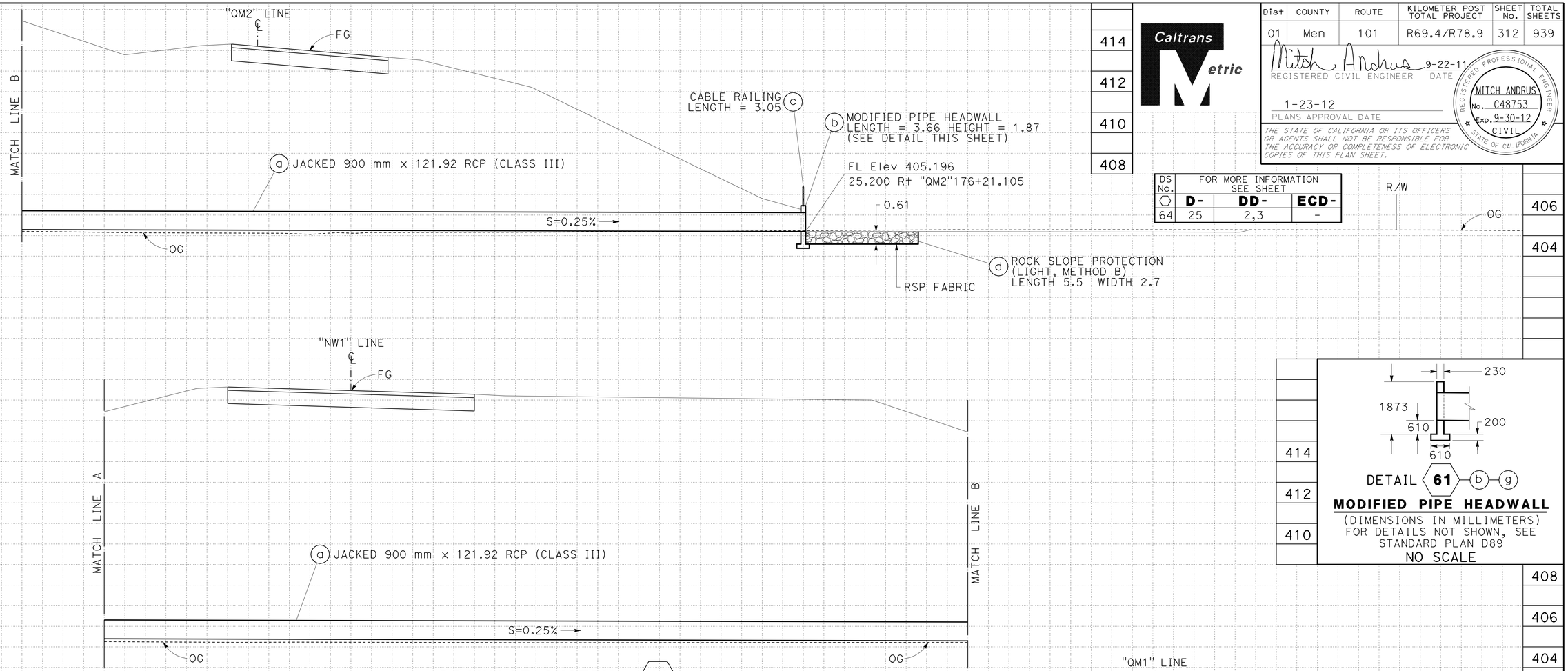

DRAINAGE SYSTEM (61)
"NW1"176+12.665
NO SKEW

DETAIL (61) (b) (g)
MODIFIED PIPE HEADWALL
(DIMENSIONS IN MILLIMETERS)
FOR DETAILS NOT SHOWN, SEE STANDARD PLAN D89
NO SCALE

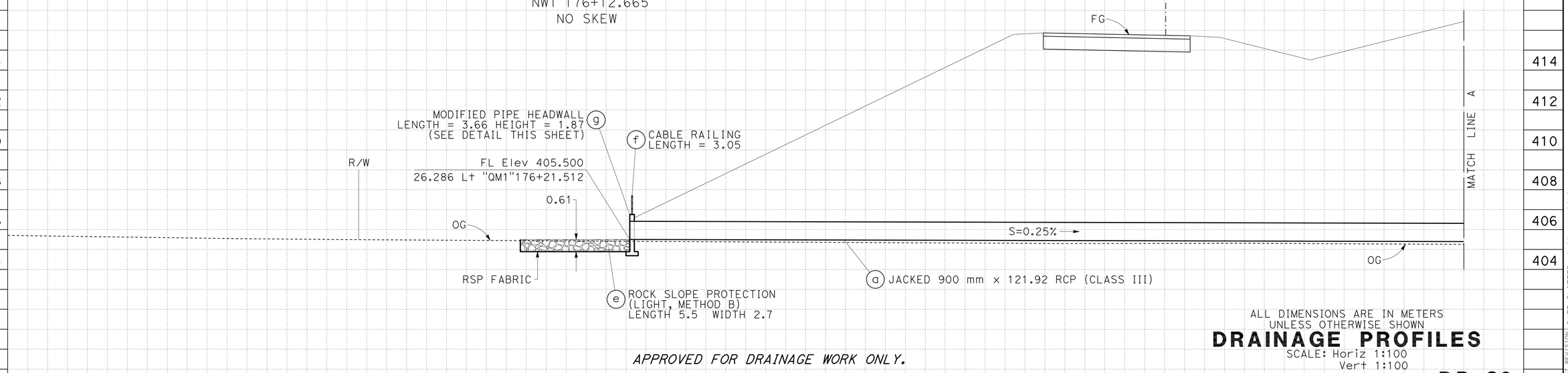

ALL DIMENSIONS ARE IN METERS UNLESS OTHERWISE SHOWN

DRAINAGE PROFILES

SCALE: Horiz 1:100
Vert 1:100

APPROVED FOR DRAINAGE WORK ONLY.

DP-38

REVISED BY	DATE REVISED
GMA	05-31-11

CALCULATED-DESIGNED BY: SCOTT FOSTER
CHECKED BY: KAO THAO
FUNCTIONAL SUPERVISOR: DOUGLAS S. JONES

STATE OF CALIFORNIA - DEPARTMENT OF TRANSPORTATION
Caltrans 03-DESIGN EAST

LAST REVISION 08-10-11 DATE PLOTTED => 28-JAN-2012 TIME PLOTTED => 06:56

Dist	COUNTY	ROUTE	KILOMETER POST TOTAL PROJECT	SHEET No.	TOTAL SHEETS
01	Men	101	R69.4/R78.9	313	939

Mitch Andrus 9-22-11
REGISTERED CIVIL ENGINEER DATE

1-23-12
PLANS APPROVAL DATE

REGISTERED PROFESSIONAL ENGINEER MITCH ANDRUS No. C48753 Exp. 9-30-12 CIVIL STATE OF CALIFORNIA

THE STATE OF CALIFORNIA OR ITS OFFICERS OR AGENTS SHALL NOT BE RESPONSIBLE FOR THE ACCURACY OR COMPLETENESS OF ELECTRONIC COPIES OF THIS PLAN SHEET.

Caltrans Metric

DS No.	FOR MORE INFORMATION SEE SHEET		
⬡	D-	DD-	ECD-
62	26	1,2,10,11	-
63	26	1	-
64	26	1,3,4,7	-

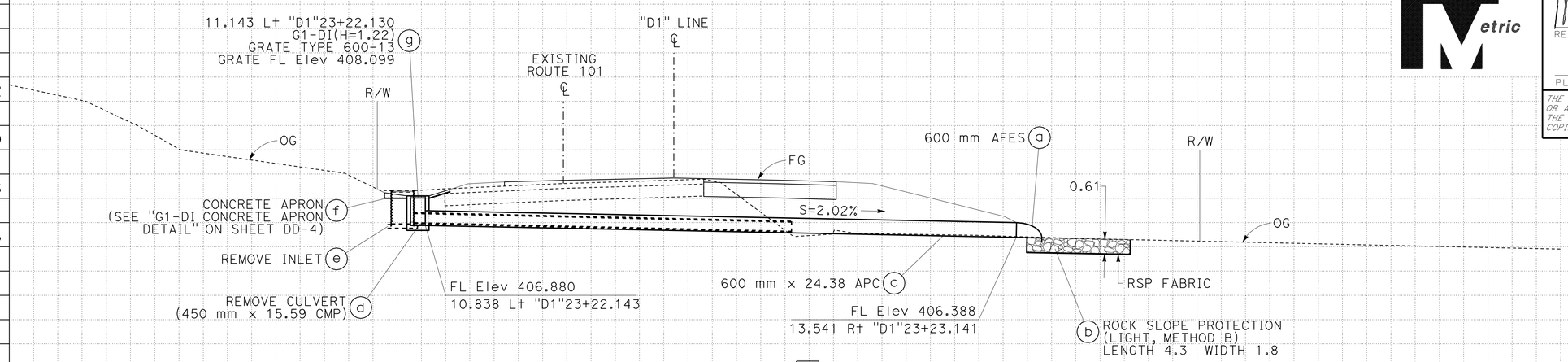

DRAINAGE SYSTEM 64

"D1"23+22.577
3.49° SKEW

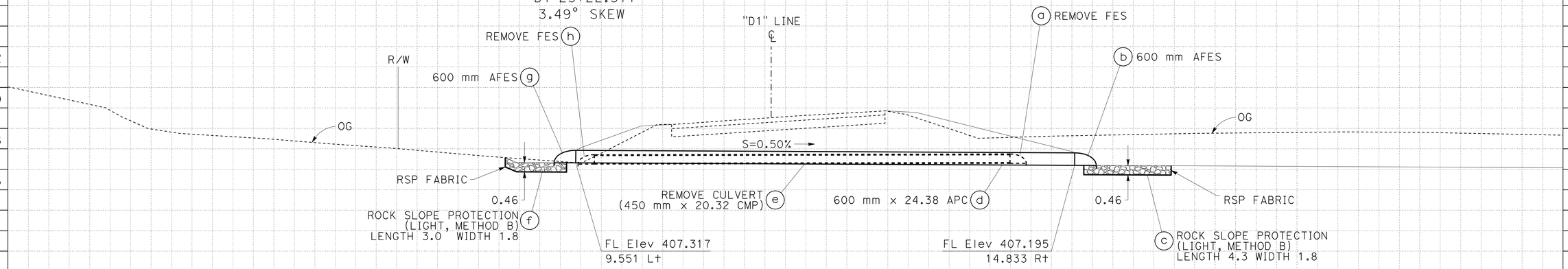

DRAINAGE SYSTEM 63

"D1"21+68.638
NO SKEW

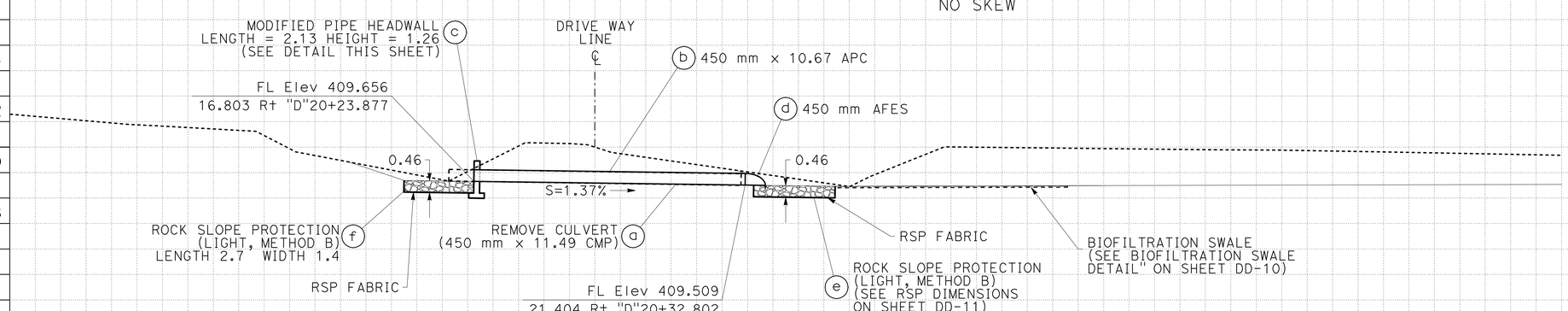

DRAINAGE SYSTEM 62

"D"20+27.898
18.812 Rt

APPROVED FOR DRAINAGE WORK ONLY.

ALL DIMENSIONS ARE IN METERS
UNLESS OTHERWISE SHOWN

DRAINAGE PROFILES

SCALE: Horiz 1:100
Vert 1:100

DP-39

REVISED BY	DATE REVISED
GMA	05-31-11

SCOTT FOSTER — KAO THAO — CALCULATED-DESIGNED BY — CHECKED BY

FUNCTIONAL SUPERVISOR: DOUGLAS S. JONES

STATE OF CALIFORNIA - DEPARTMENT OF TRANSPORTATION
Caltrans 03-DESIGN EAST

LAST REVISION 08-10-11 DATE PLOTTED => 28-JAN-2012 TIME PLOTTED => 06:56

DS No.	FOR MORE INFORMATION SEE SHEET		
⬡	D-	DD-	ECD-
65	27	1,3,7	-
66	27	1,3,4,7	-

Caltrans Metric

Dist	COUNTY	ROUTE	KILOMETER POST TOTAL PROJECT	SHEET No.	TOTAL SHEETS
01	Men	101	R69.4/R78.9	314	939

Mitch Andrus 9-22-11
REGISTERED CIVIL ENGINEER DATE

1-23-12
PLANS APPROVAL DATE

REGISTERED PROFESSIONAL ENGINEER MITCH ANDRUS No. C48753 Exp. 9-30-12 CIVIL STATE OF CALIFORNIA

THE STATE OF CALIFORNIA OR ITS OFFICERS OR AGENTS SHALL NOT BE RESPONSIBLE FOR THE ACCURACY OR COMPLETENESS OF ELECTRONIC COPIES OF THIS PLAN SHEET.

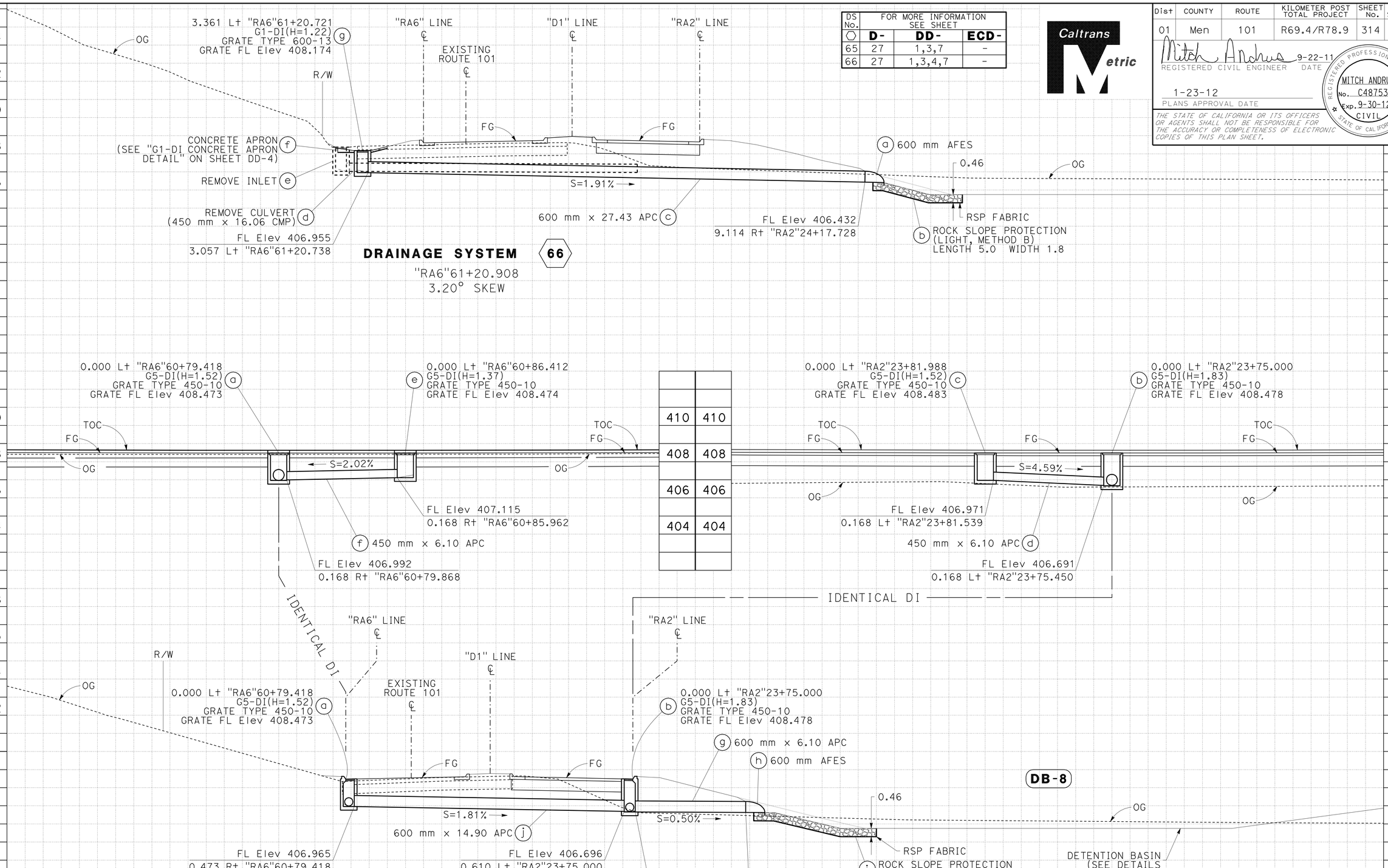

APPROVED FOR DRAINAGE WORK ONLY.

ALL DIMENSIONS ARE IN METERS UNLESS OTHERWISE SHOWN

DRAINAGE PROFILES

SCALE: Horiz 1:100
Vert 1:100

DP-40

REVISED BY	DATE REVISED
GMA	05-31-11

CALCULATED-DESIGNED BY: SCOTT FOSTER
CHECKED BY: KAO THAO
FUNCTIONAL SUPERVISOR: DOUGLAS S. JONES

STATE OF CALIFORNIA - DEPARTMENT OF TRANSPORTATION
Caltrans 03-DESIGN EAST

LAST REVISION 08-10-11 | DATE PLOTTED => 28-JAN-2012 | TIME PLOTTED => 06:56

DS No.	FOR MORE INFORMATION SEE SHEET		
	D-	DD-	ECD-
67	27	1,7,11	-

Dist	COUNTY	ROUTE	KILOMETER POST TOTAL PROJECT	SHEET No.	TOTAL SHEETS
01	Men	101	R69.4/R78.9	315	939

Mitch Andrus 9-22-11
REGISTERED CIVIL ENGINEER DATE

1-23-12
PLANS APPROVAL DATE

REGISTERED PROFESSIONAL ENGINEER MITCH ANDRUS No. C48753 Exp. 9-30-12 CIVIL STATE OF CALIFORNIA

THE STATE OF CALIFORNIA OR ITS OFFICERS OR AGENTS SHALL NOT BE RESPONSIBLE FOR THE ACCURACY OR COMPLETENESS OF ELECTRONIC COPIES OF THIS PLAN SHEET.

Caltrans Metric

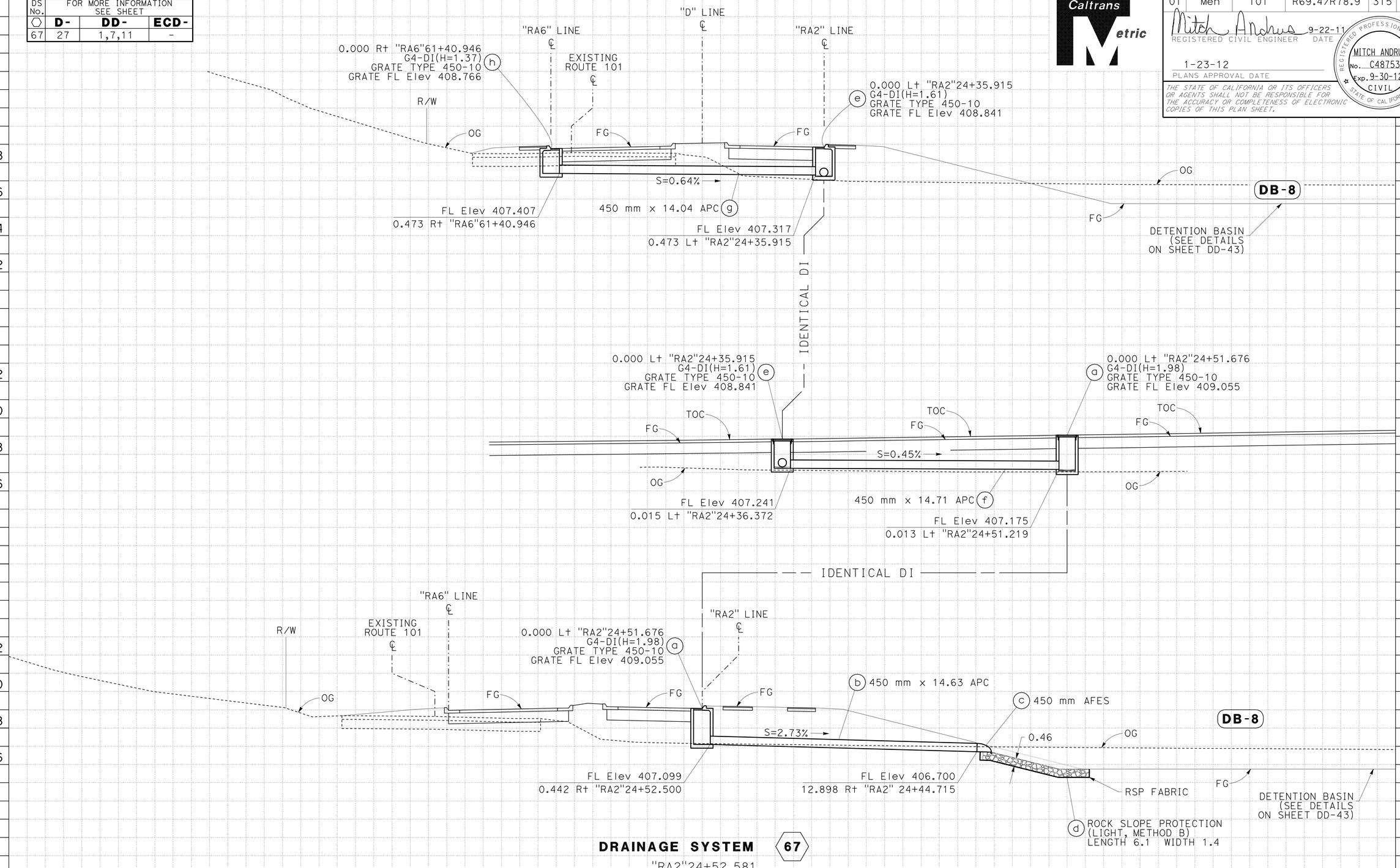

DRAINAGE SYSTEM (67)

"RA2"24+52.581
10.20° SKEW

APPROVED FOR DRAINAGE WORK ONLY.

ALL DIMENSIONS ARE IN METERS UNLESS OTHERWISE SHOWN

DRAINAGE PROFILES

SCALE: Horiz 1:100
Vert 1:100

DP-41

REVISED BY	DATE REVISED
GMA	05-31-11

CALCULATED-DESIGNED BY: SCOTT FOSTER
CHECKED BY: KAO THAO
FUNCTIONAL SUPERVISOR: DOUGLAS S. JONES

STATE OF CALIFORNIA - DEPARTMENT OF TRANSPORTATION
Caltrans 03-DESIGN EAST

LAST REVISION 08-10-11 DATE PLOTTED => 28-JAN-2012 TIME PLOTTED => 06:56

Dist	COUNTY	ROUTE	KILOMETER POST TOTAL PROJECT	SHEET No.	TOTAL SHEETS
01	Men	101	R69.4/R78.9	316	939

Mitch Andrus 9-22-11
REGISTERED CIVIL ENGINEER DATE

1-23-12
PLANS APPROVAL DATE

REGISTERED PROFESSIONAL ENGINEER
MITCH ANDRUS
No. C48753
Exp. 9-30-12
CIVIL
STATE OF CALIFORNIA

THE STATE OF CALIFORNIA OR ITS OFFICERS OR AGENTS SHALL NOT BE RESPONSIBLE FOR THE ACCURACY OR COMPLETENESS OF ELECTRONIC COPIES OF THIS PLAN SHEET.

Caltrans Metric

DS No.	FOR MORE INFORMATION SEE SHEET		
⬡	D-	DD-	ECD-
68	27	1,7,11	-

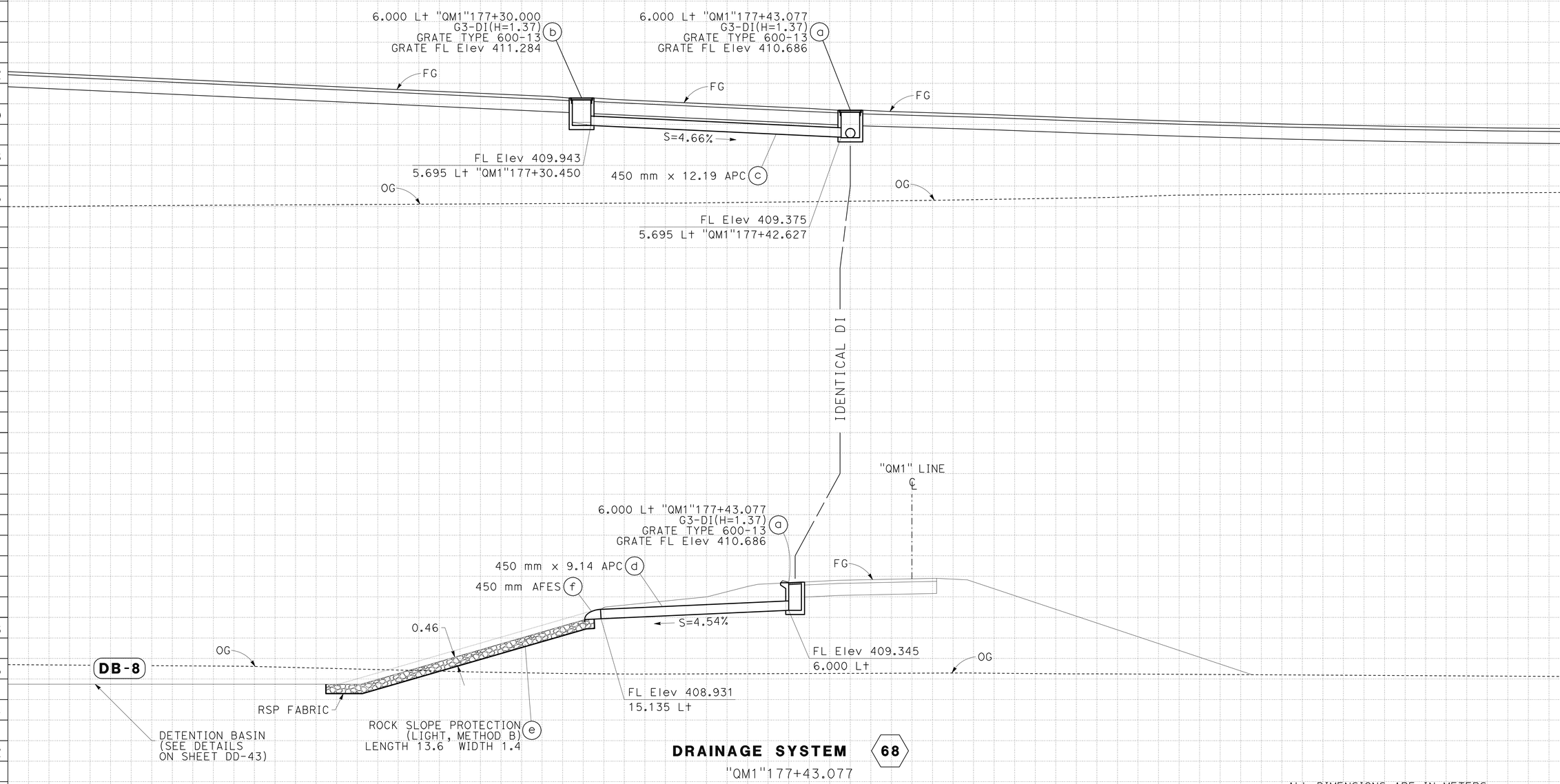

DRAINAGE SYSTEM 68

"QM1"177+43.077
NO SKEW

APPROVED FOR DRAINAGE WORK ONLY.

ALL DIMENSIONS ARE IN METERS
UNLESS OTHERWISE SHOWN

DRAINAGE PROFILES

SCALE: Horiz 1:100
Vert 1:100

DP-42

REVISED BY	DATE REVISED
GMA	05-31-11

CALCULATED-DESIGNED BY: SCOTT FOSTER
CHECKED BY: KAO THAO
FUNCTIONAL SUPERVISOR: DOUGLAS S. JONES

STATE OF CALIFORNIA - DEPARTMENT OF TRANSPORTATION
Caltrans 03-DESIGN EAST

LAST REVISION 08-10-11 DATE PLOTTED => 28-JAN-2012 TIME PLOTTED => 06:56

Dist	COUNTY	ROUTE	KILOMETER POST TOTAL PROJECT	SHEET No.	TOTAL SHEETS
01	Men	101	R69.4/R78.9	317	939

Caltrans Metric

Mitch Andrus 9-22-11
REGISTERED CIVIL ENGINEER DATE

1-23-12
PLANS APPROVAL DATE

REGISTERED PROFESSIONAL ENGINEER MITCH ANDRUS No. C48753 Exp. 9-30-12 CIVIL STATE OF CALIFORNIA

THE STATE OF CALIFORNIA OR ITS OFFICERS OR AGENTS SHALL NOT BE RESPONSIBLE FOR THE ACCURACY OR COMPLETENESS OF ELECTRONIC COPIES OF THIS PLAN SHEET.

DS No.	FOR MORE INFORMATION SEE SHEET		
⬡	D-	DD-	ECD-
69	27	1,3,7	-

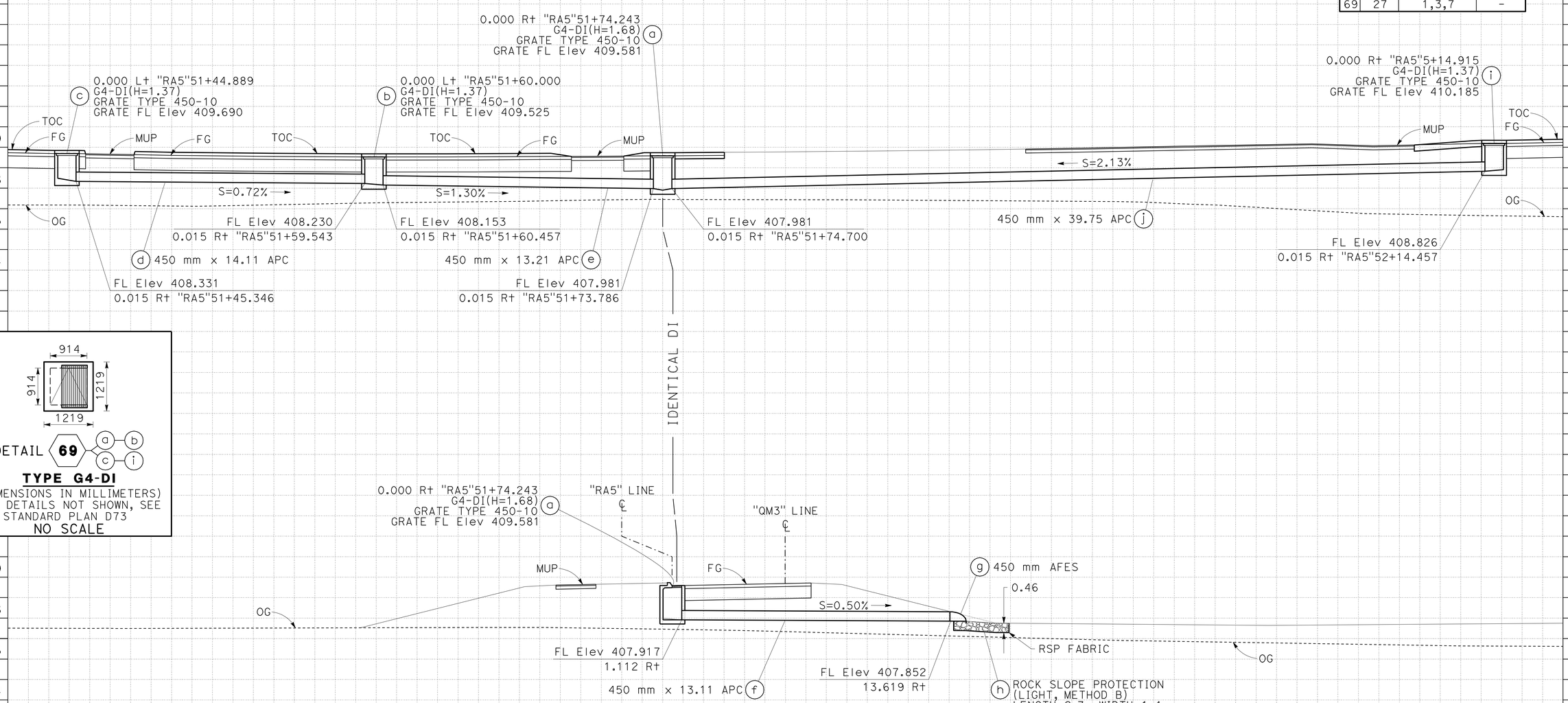

TYPE G4-DI
(DIMENSIONS IN MILLIMETERS)
FOR DETAILS NOT SHOWN, SEE STANDARD PLAN D73
NO SCALE

DRAINAGE SYSTEM 69
"RA5"51+74.243
NO SKEW

APPROVED FOR DRAINAGE WORK ONLY.

ALL DIMENSIONS ARE IN METERS
UNLESS OTHERWISE SHOWN

DRAINAGE PROFILES

SCALE: Horiz 1:100
Vert 1:100

DP-43

REVISED BY	DATE REVISED
GMA	05-31-11

CALCULATED-DESIGNED BY: SCOTT FOSTER
CHECKED BY: KAO THAO
FUNCTIONAL SUPERVISOR: DOUGLAS S. JONES

STATE OF CALIFORNIA - DEPARTMENT OF TRANSPORTATION
Caltrans 03-DESIGN EAST

LAST REVISION 08-10-11 DATE PLOTTED => 28-JAN-2012 TIME PLOTTED => 06:56

Dist	COUNTY	ROUTE	KILOMETER POST TOTAL PROJECT	SHEET No.	TOTAL SHEETS
01	Men	101	R69.4/R78.9	318	939

Mitch Andrus 9-22-11
REGISTERED CIVIL ENGINEER DATE

1-23-12
PLANS APPROVAL DATE

REGISTERED PROFESSIONAL ENGINEER MITCH ANDRUS No. C48753 Exp. 9-30-12 CIVIL STATE OF CALIFORNIA

THE STATE OF CALIFORNIA OR ITS OFFICERS OR AGENTS SHALL NOT BE RESPONSIBLE FOR THE ACCURACY OR COMPLETENESS OF ELECTRONIC COPIES OF THIS PLAN SHEET.

Caltrans Metric

DS No.	FOR MORE INFORMATION SEE SHEET		
⬡	D-	DD-	ECD-
70	27	1,7,10,11	2
71	27	-	-
72	27	2	-

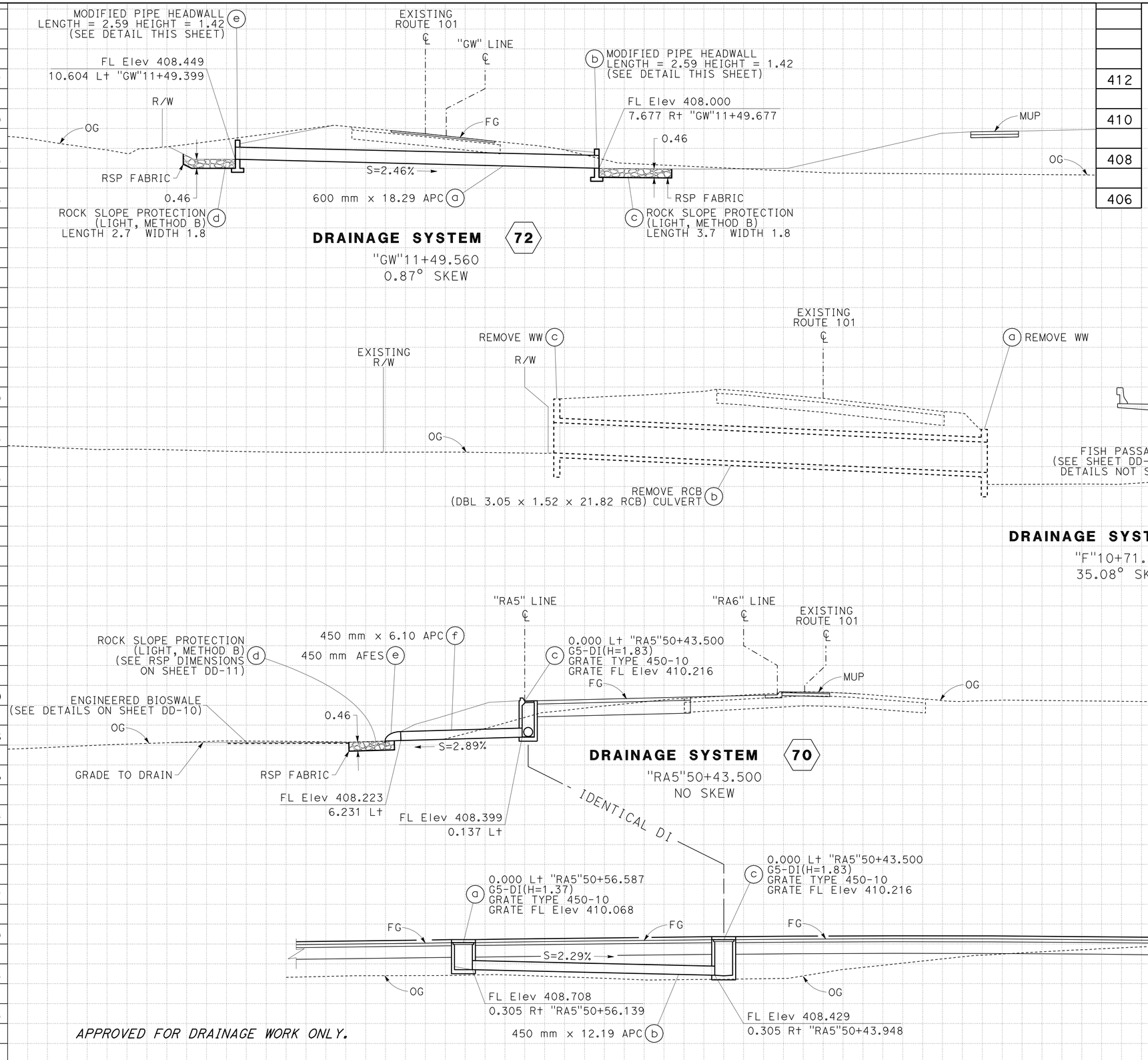

APPROVED FOR DRAINAGE WORK ONLY.

ALL DIMENSIONS ARE IN METERS
UNLESS OTHERWISE SHOWN

DRAINAGE PROFILES

SCALE: Horiz 1:100
Vert 1:100

DP-44

REVISED BY	DATE REVISED
GMA	05-31-11

CALCULATED-DESIGNED BY: SCOTT FOSTER
CHECKED BY: KAO THAO
FUNCTIONAL SUPERVISOR: DOUGLAS S. JONES

STATE OF CALIFORNIA - DEPARTMENT OF TRANSPORTATION
Caltrans 03-DESIGN EAST

LAST REVISION 08-10-11 DATE PLOTTED => 28-JAN-2012 TIME PLOTTED => 10:08

Dist	COUNTY	ROUTE	KILOMETER POST TOTAL PROJECT	SHEET No.	TOTAL SHEETS
01	Men	101	R69.4/R78.9	319	939

Caltrans Metric

Mitch Andrus 9-22-11
REGISTERED CIVIL ENGINEER DATE

1-23-12
PLANS APPROVAL DATE

REGISTERED PROFESSIONAL ENGINEER MITCH ANDRUS No. C48753 Exp. 9-30-12 CIVIL STATE OF CALIFORNIA

THE STATE OF CALIFORNIA OR ITS OFFICERS OR AGENTS SHALL NOT BE RESPONSIBLE FOR THE ACCURACY OR COMPLETENESS OF ELECTRONIC COPIES OF THIS PLAN SHEET.

DS No.	FOR MORE INFORMATION SEE SHEET		
⬡	D-	DD-	ECD-
73	27	1,4,7,8	-

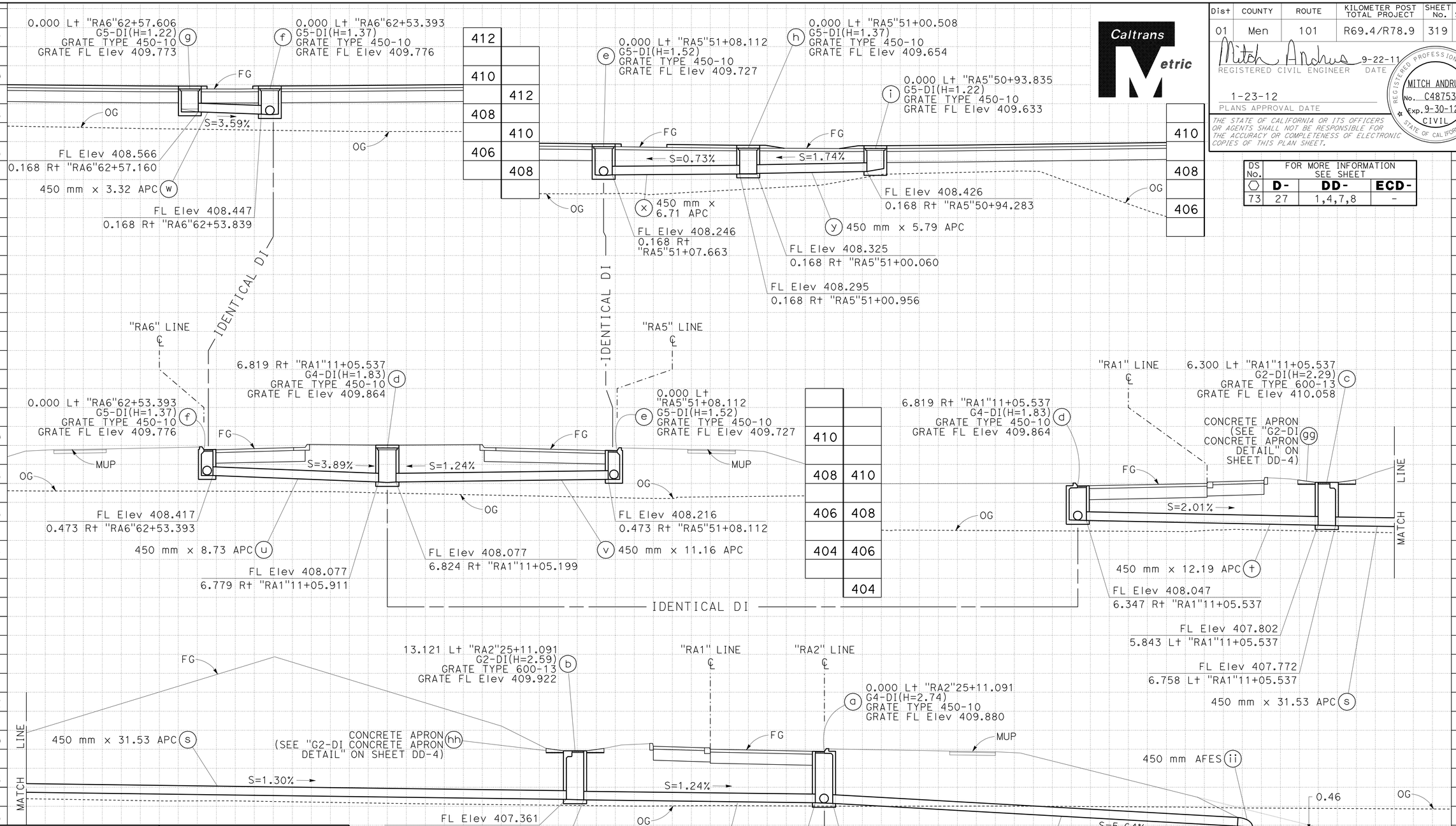

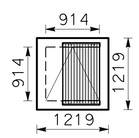

DETAIL 73 (b) (c)

TYPE G2-DI

(DIMENSIONS IN MILLIMETERS) FOR DETAILS NOT SHOWN, SEE STANDARD PLAN D73

NO SCALE

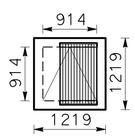

DETAIL 73 (a) (d)

TYPE G4-DI

(DIMENSIONS IN MILLIMETERS) FOR DETAILS NOT SHOWN, SEE STANDARD PLAN D73

NO SCALE

DRAINAGE SYSTEM (73)

"RA2"25+11.091

NO SKEW

APPROVED FOR DRINAGE WORK ONLY.

ALL DIMENSIONS ARE IN METERS UNLESS OTHERWISE SHOWN

DRAINAGE PROFILES

SCALE: Horiz 1:100
Vert 1:100

DP-45

DGK	12-31-09		
BMM	05-31-11		
REVISED BY	DATE REVISED		
SCOTT FOSTER	KAO THAO		
CALCULATED-DESIGNED BY	CHECKED BY		
FUNCTIONAL SUPERVISOR	DOUGLAS S. JONES		

STATE OF CALIFORNIA - DEPARTMENT OF TRANSPORTATION

Caltrans 03-DESIGN EAST

LAST REVISION 08-10-11 DATE PLOTTED => 28-JAN-2012 TIME PLOTTED => 06:57

DS No.	FOR MORE INFORMATION SEE SHEET		
⬡	D-	DD-	ECD-
73	27	1,4,7,8	-

Dist	COUNTY	ROUTE	KILOMETER POST TOTAL PROJECT	SHEET No.	TOTAL SHEETS
01	Men	101	R69.4/R78.9	320	939

Mitch Andrus 9-22-11
REGISTERED CIVIL ENGINEER DATE

1-23-12
PLANS APPROVAL DATE

REGISTERED PROFESSIONAL ENGINEER MITCH ANDRUS No. C48753 Exp. 9-30-12 CIVIL STATE OF CALIFORNIA

THE STATE OF CALIFORNIA OR ITS OFFICERS OR AGENTS SHALL NOT BE RESPONSIBLE FOR THE ACCURACY OR COMPLETENESS OF ELECTRONIC COPIES OF THIS PLAN SHEET.

Caltrans Metric

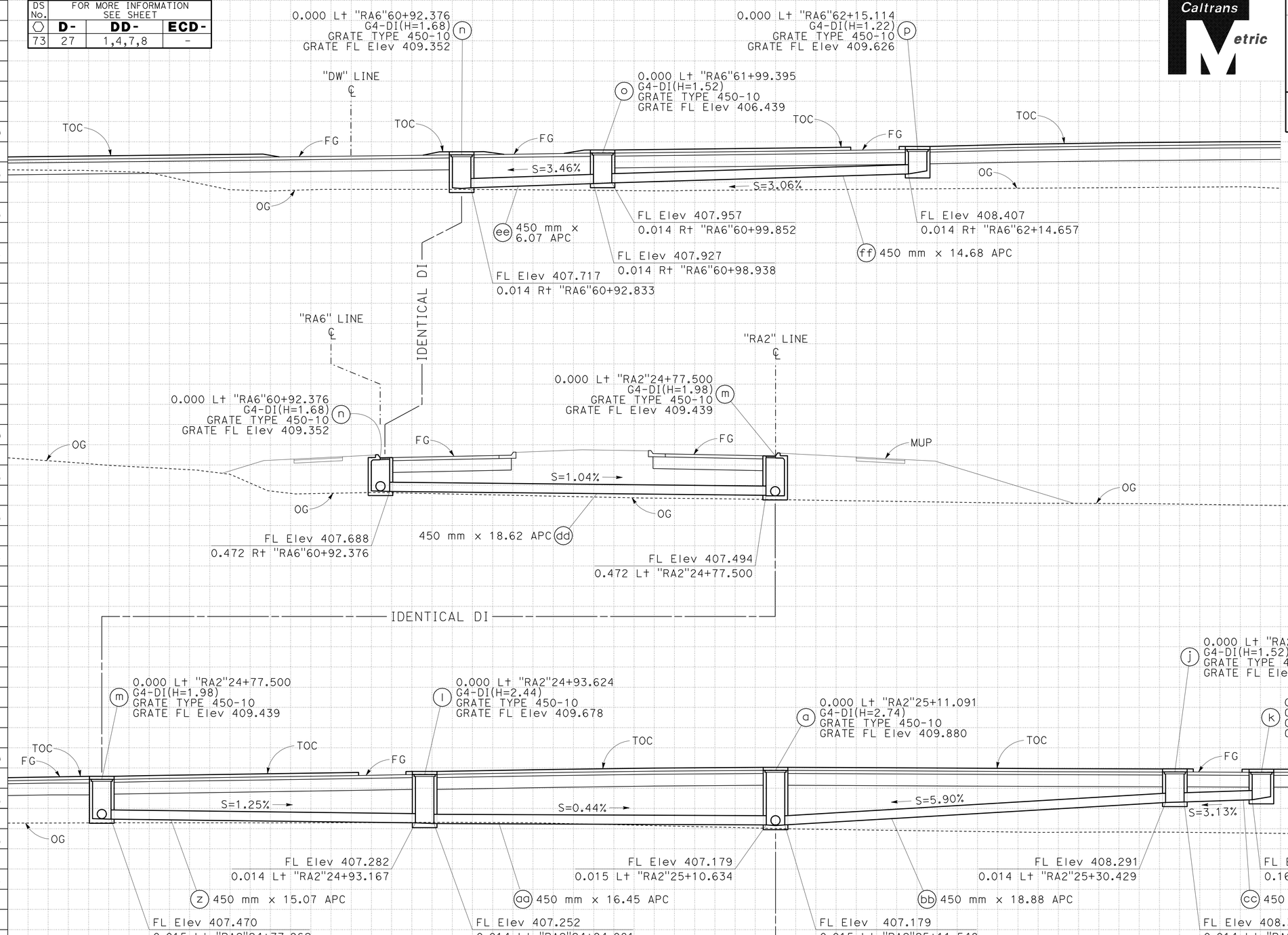

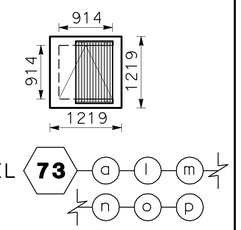

TYPE G4-DI
(DIMENSIONS IN MILLIMETERS)
FOR DETAILS NOT SHOWN, SEE STANDARD PLAN D73
NO SCALE

DRAINAGE SYSTEM 73
"RA2"25+11.091
NO SKEW

IDENTICAL DI
SEE SHEET DP-45

APPROVED FOR DRAINAGE WORK ONLY.

ALL DIMENSIONS ARE IN METERS
UNLESS OTHERWISE SHOWN

DRAINAGE PROFILES

SCALE: Horiz 1:100
Vert 1:100

DP-46

REVISED BY	DATE REVISED
GMA	05-31-11

CALCULATED-DESIGNED BY: SCOTT FOSTER
CHECKED BY: KAO THAO
FUNCTIONAL SUPERVISOR: DOUGLAS S. JONES

STATE OF CALIFORNIA - DEPARTMENT OF TRANSPORTATION
Caltrans 03-DESIGN EAST

LAST REVISION 08-10-11 DATE PLOTTED => 28-JAN-2012 TIME PLOTTED => 06:57

Dist	COUNTY	ROUTE	KILOMETER POST TOTAL PROJECT	SHEET No.	TOTAL SHEETS
01	Men	101	R69.4/R78.9	321	939

Mitch Andrus 9-22-11
REGISTERED CIVIL ENGINEER DATE

1-23-12
PLANS APPROVAL DATE

REGISTERED PROFESSIONAL ENGINEER MITCH ANDRUS No. C48753 Exp. 9-30-12 CIVIL STATE OF CALIFORNIA

THE STATE OF CALIFORNIA OR ITS OFFICERS OR AGENTS SHALL NOT BE RESPONSIBLE FOR THE ACCURACY OR COMPLETENESS OF ELECTRONIC COPIES OF THIS PLAN SHEET.

Caltrans Metric

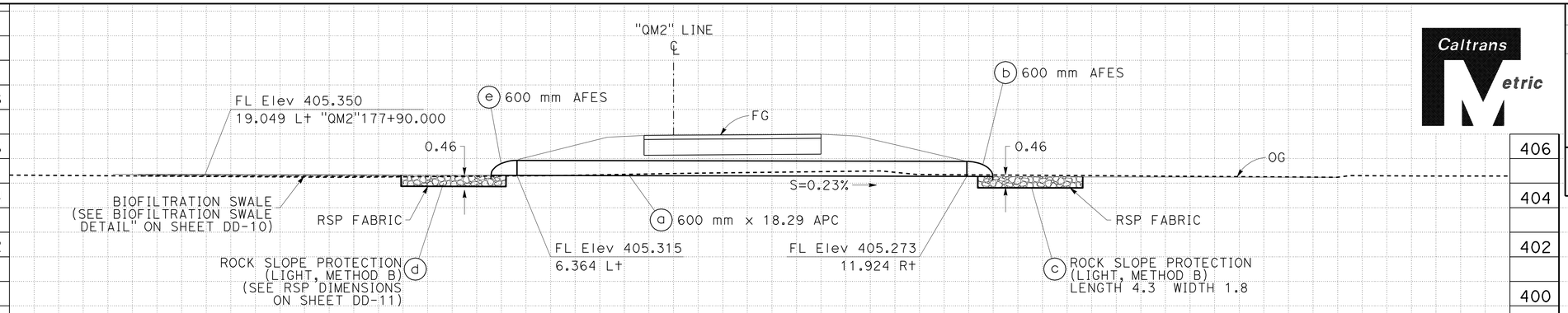

DRAINAGE SYSTEM (75)

"QM2"177+90.000
NO SKEW

DS No.	FOR MORE INFORMATION SEE SHEET		
⬡	D-	DD-	ECD-
74	28	1,,7,11	-
75	28	1,10	-

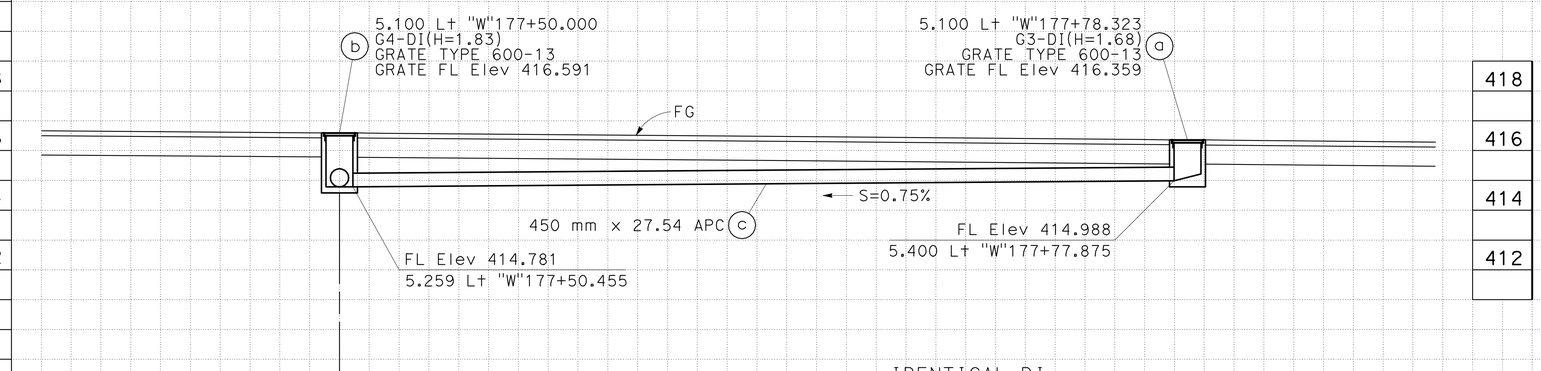

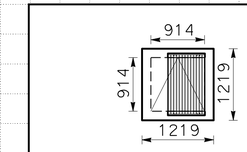

DETAIL (74) (b)

TYPE G4-DI

(DIMENSIONS IN MILLIMETERS)
FOR DETAILS NOT SHOWN, SEE STANDARD PLAN D73
NO SCALE

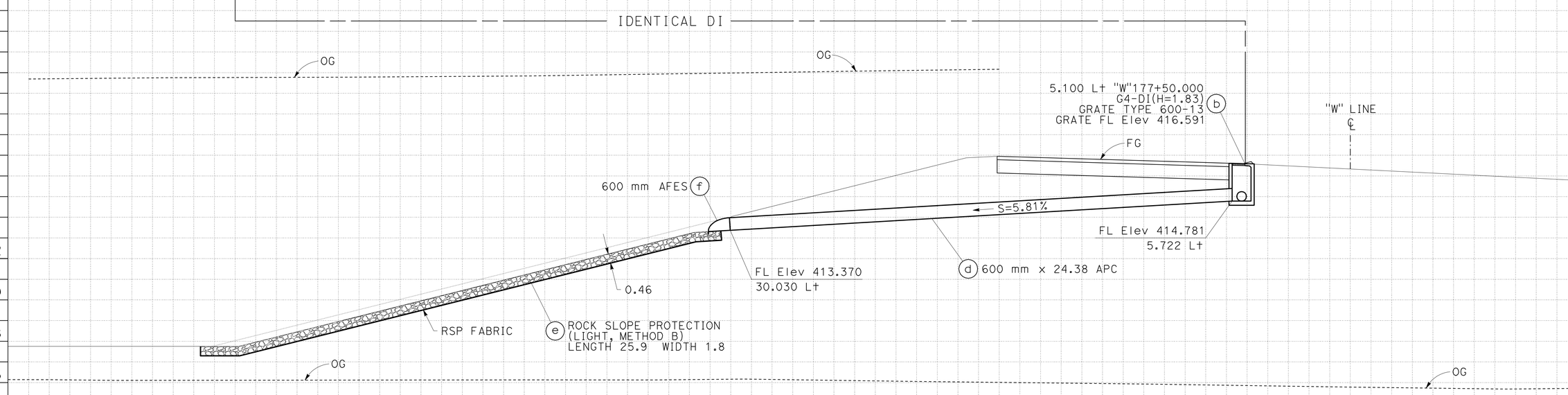

DRAINAGE SYSTEM (74)

"W"177+50.000
NO SKEW

APPROVED FOR DRAINAGE WORK ONLY.

ALL DIMENSIONS ARE IN METERS
UNLESS OTHERWISE SHOWN

DRAINAGE PROFILES

SCALE: Horiz 1:100
Vert 1:100

DP-47

GMA	REVISED BY	05-31-11
	DATE REVISED	
SCOTT FOSTER	CALCULATED-DESIGNED BY	KAO THAO
	CHECKED BY	
FUNCTIONAL SUPERVISOR	DOUGLAS S. JONES	

STATE OF CALIFORNIA - DEPARTMENT OF TRANSPORTATION
Caltrans 03-DESIGN EAST

LAST REVISION 08-10-11 DATE PLOTTED => 28-JAN-2012 TIME PLOTTED => 06:57

Dist	COUNTY	ROUTE	KILOMETER POST TOTAL PROJECT	SHEET No.	TOTAL SHEETS
01	Men	101	R69.4/R78.9	322	939

Mitch Andrus 9-22-11
REGISTERED CIVIL ENGINEER DATE

1-23-12
PLANS APPROVAL DATE

REGISTERED PROFESSIONAL ENGINEER MITCH ANDRUS No. C48753 Exp. 9-30-12 CIVIL STATE OF CALIFORNIA

THE STATE OF CALIFORNIA OR ITS OFFICERS OR AGENTS SHALL NOT BE RESPONSIBLE FOR THE ACCURACY OR COMPLETENESS OF ELECTRONIC COPIES OF THIS PLAN SHEET.

Caltrans Metric

DS No.	FOR MORE INFORMATION SEE SHEET		
	D-	DD-	ECD-
76	27,28	1,2,4,6,7, 10,11,12	-

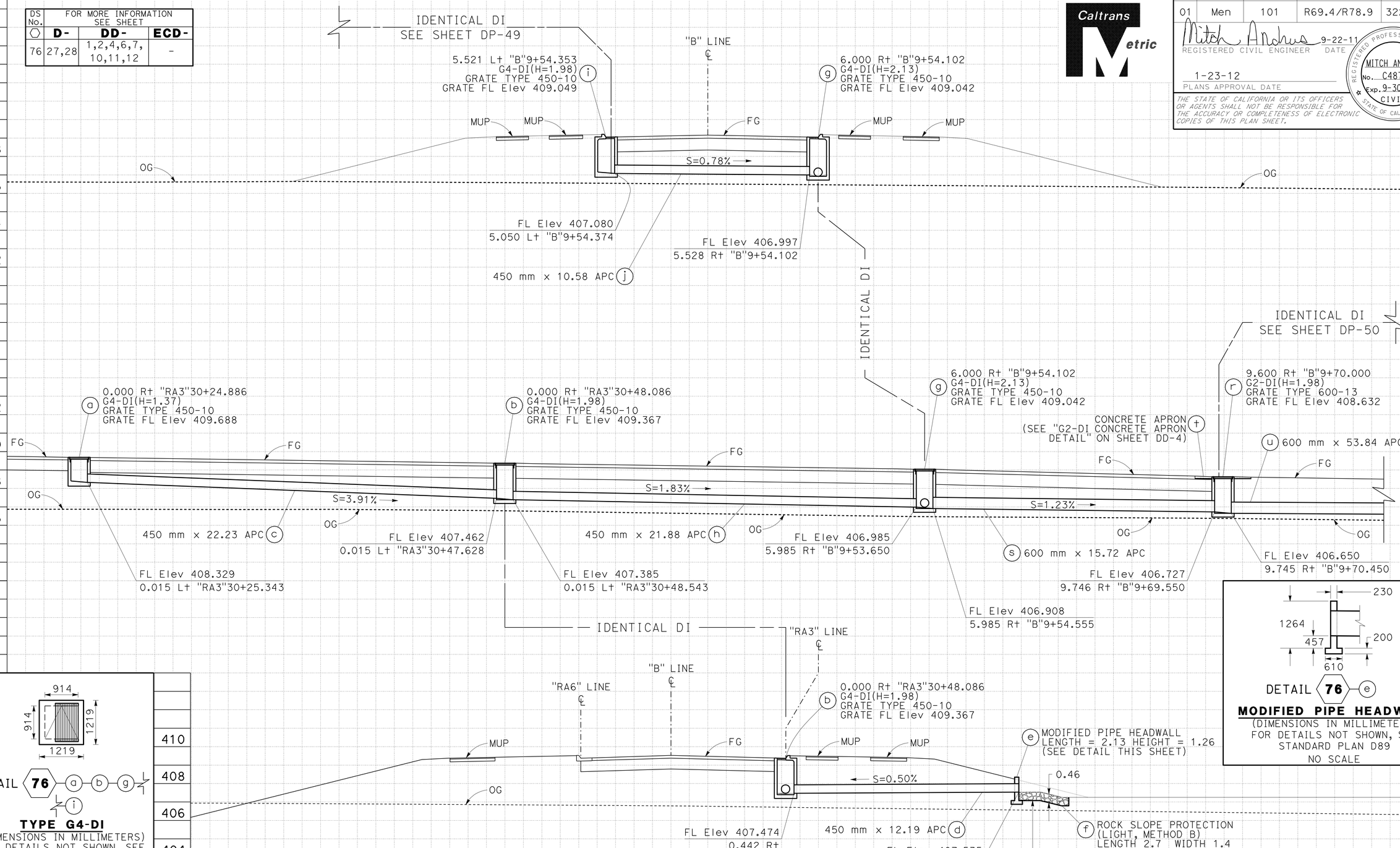

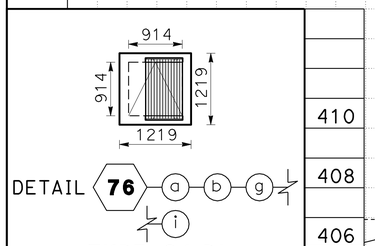

TYPE G4-DI
(DIMENSIONS IN MILLIMETERS)
FOR DETAILS NOT SHOWN, SEE STANDARD PLAN D73
NO SCALE

MODIFIED PIPE HEADWALL
(DIMENSIONS IN MILLIMETERS)
FOR DETAILS NOT SHOWN, SEE STANDARD PLAN D89
NO SCALE

DRAINAGE SYSTEM 76
"RA3"30+48.086
NO SKEW

APPROVED FOR DRAINAGE WORK ONLY.

ALL DIMENSIONS ARE IN METERS UNLESS OTHERWISE SHOWN

DRAINAGE PROFILES

SCALE: Horiz 1:100
Vert 1:100

DP-48

STATE OF CALIFORNIA - DEPARTMENT OF TRANSPORTATION
Caltrans 03-DESIGN EAST

FUNCTIONAL SUPERVISOR: DOUGLAS S. JONES
CALCULATED-DESIGNED BY: SCOTT FOSTER
CHECKED BY: KAO THAO
REVISED BY: GMA
DATE REVISED: 05-31-11

LAST REVISION 08-10-11 DATE PLOTTED => 28-JAN-2012 TIME PLOTTED => 06:57

DS No.	FOR MORE INFORMATION SEE SHEET		
⬡	D-	DD-	ECD-
76	27,28	1,2,3,4,6, 7,10,11,12	-

Dist	COUNTY	ROUTE	KILOMETER POST TOTAL PROJECT	SHEET No.	TOTAL SHEETS
01	Men	101	R69.4/R78.9	323	939

Mitch Andrus 9-22-11
REGISTERED CIVIL ENGINEER DATE

1-23-12
PLANS APPROVAL DATE

REGISTERED PROFESSIONAL ENGINEER MITCH ANDRUS No. C48753 Exp. 9-30-12 CIVIL STATE OF CALIFORNIA

THE STATE OF CALIFORNIA OR ITS OFFICERS OR AGENTS SHALL NOT BE RESPONSIBLE FOR THE ACCURACY OR COMPLETENESS OF ELECTRONIC COPIES OF THIS PLAN SHEET.

Caltrans Metric

IDENTICAL DI
SEE SHEET DP-48

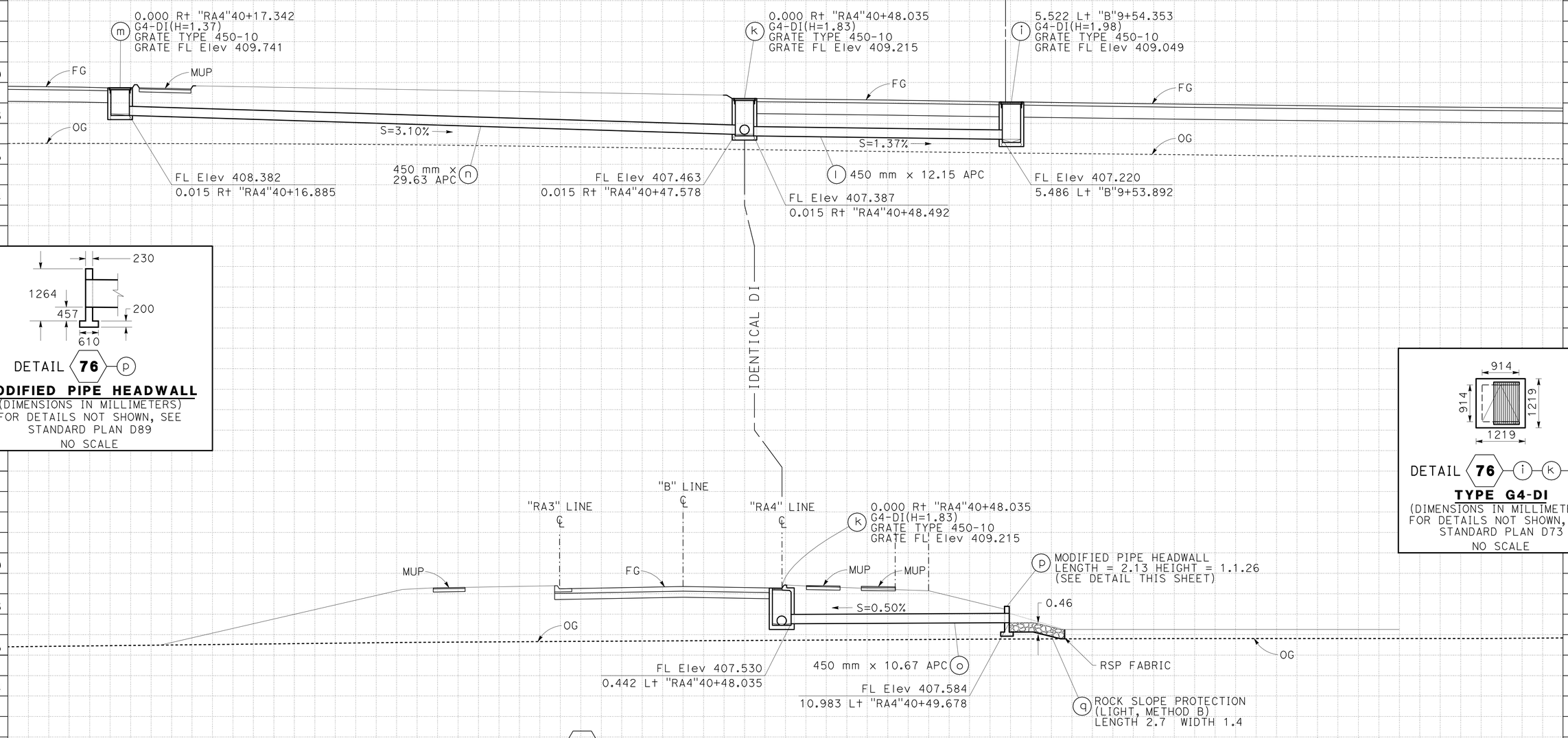

DETAIL 76 P

MODIFIED PIPE HEADWALL
(DIMENSIONS IN MILLIMETERS)
FOR DETAILS NOT SHOWN, SEE
STANDARD PLAN D89
NO SCALE

DETAIL 76 i k m

TYPE G4-DI
(DIMENSIONS IN MILLIMETERS)
FOR DETAILS NOT SHOWN, SEE
STANDARD PLAN D73
NO SCALE

76 **DRAINAGE SYSTEM**
"RA4"40+47.966
8.86° SKEW

APPROVED FOR DRAINAGE WORK ONLY.

ALL DIMENSIONS ARE IN METERS
UNLESS OTHERWISE SHOWN

DRAINAGE PROFILES

SCALE: Horiz 1:100
Vert 1:100

DP-49

REVISED BY	DATE REVISED
GMA	05-31-11

CALCULATED-DESIGNED BY: SCOTT FOSTER
CHECKED BY: KAO THAO
FUNCTIONAL SUPERVISOR: DOUGLAS S. JONES

STATE OF CALIFORNIA - DEPARTMENT OF TRANSPORTATION
Caltrans 03-DESIGN EAST

LAST REVISION 08-10-11 | DATE PLOTTED => 28-JAN-2012 | TIME PLOTTED => 06:57

DS No.	FOR MORE INFORMATION SEE SHEET		
⬡	D-	DD-	ECD-
76	27,28	1,2,4,6,7, 10,11,12	-

Dist	COUNTY	ROUTE	KILOMETER POST TOTAL PROJECT	SHEET No.	TOTAL SHEETS
01	Men	101	R69.4/R78.9	324	939

Caltrans Metric

Mitch Andrus 9-22-11
REGISTERED CIVIL ENGINEER DATE

1-23-12
PLANS APPROVAL DATE

REGISTERED PROFESSIONAL ENGINEER MITCH ANDRUS No. C48753 Exp. 9-30-12 CIVIL STATE OF CALIFORNIA

THE STATE OF CALIFORNIA OR ITS OFFICERS OR AGENTS SHALL NOT BE RESPONSIBLE FOR THE ACCURACY OR COMPLETENESS OF ELECTRONIC COPIES OF THIS PLAN SHEET.

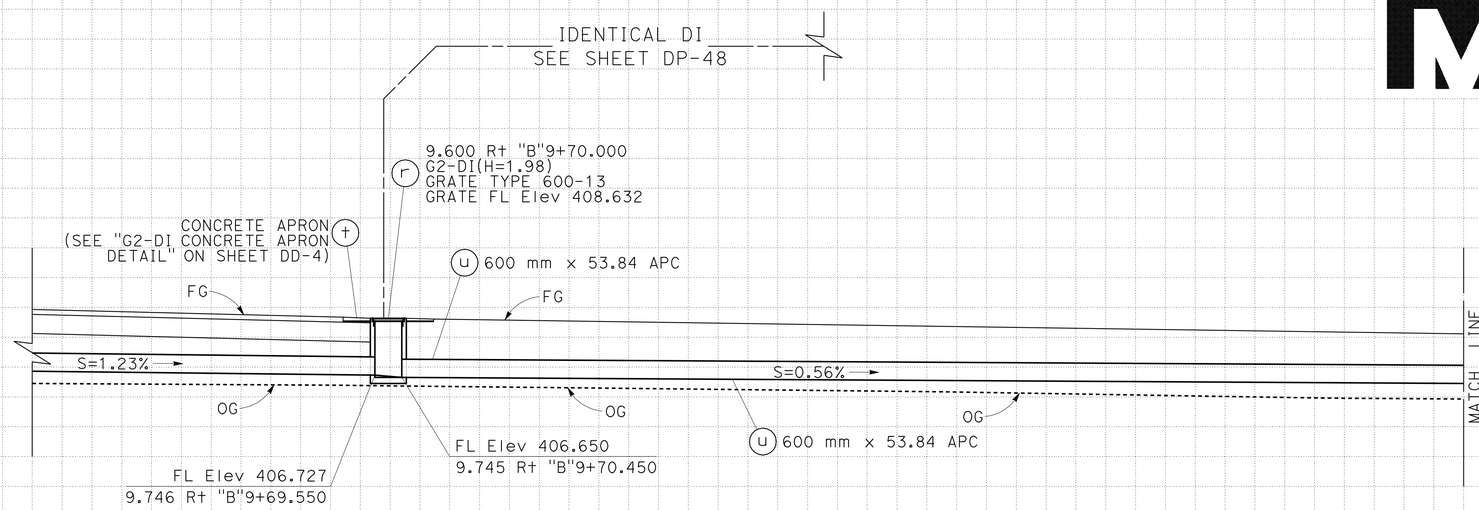

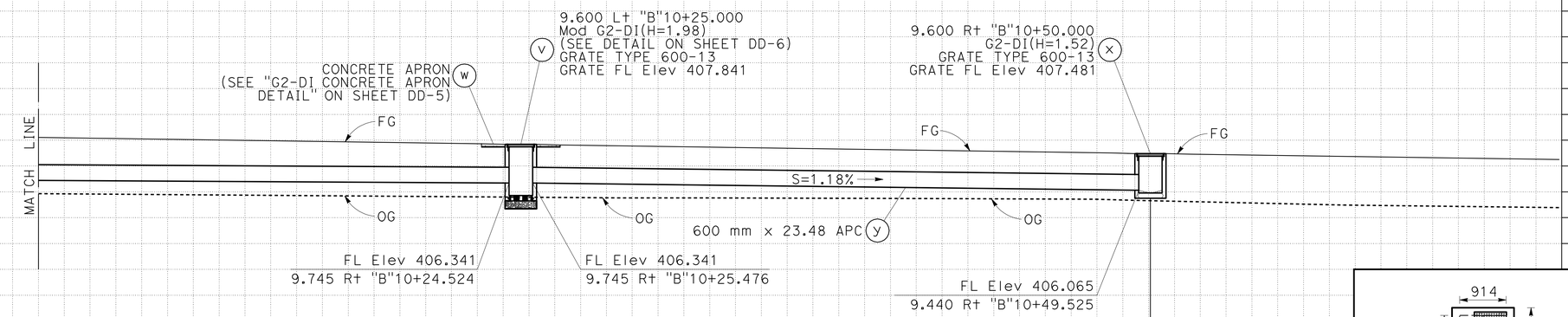

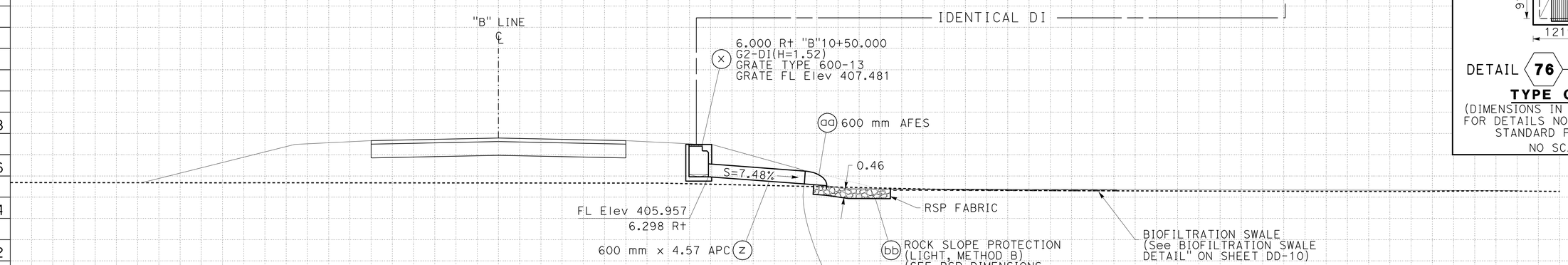

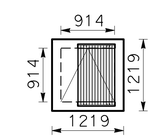

DETAIL ⬡76 (r) (v) (x)

TYPE G2-DI

(DIMENSIONS IN MILLIMETERS)
FOR DETAILS NOT SHOWN, SEE STANDARD PLAN D73
NO SCALE

DRAINAGE SYSTEM ⬡76

"B"10+50.000
NO SKEW

APPROVED FOR DRAINAGE WORK ONLY.

ALL DIMENSIONS ARE IN METERS
UNLESS OTHERWISE SHOWN

DRAINAGE PROFILES

SCALE: Horiz 1:100
Vert 1:100

DP-50

REVISED BY	DATE REVISED
GMA	05-31-11

CALCULATED-DESIGNED BY: SCOTT FOSTER
CHECKED BY: KAO THAO
FUNCTIONAL SUPERVISOR: DOUGLAS S. JONES

STATE OF CALIFORNIA - DEPARTMENT OF TRANSPORTATION
Caltrans 03-DESIGN EAST

LAST REVISION 08-10-11 DATE PLOTTED => 28-JAN-2012 TIME PLOTTED => 06:57

Dist	COUNTY	ROUTE	KILOMETER POST TOTAL PROJECT	SHEET No.	TOTAL SHEETS
01	Men	101	R69.4/R78.9	325	939

Caltrans Metric

Mitch Andrus 9-22-11
REGISTERED CIVIL ENGINEER DATE

1-23-12
PLANS APPROVAL DATE

REGISTERED PROFESSIONAL ENGINEER MITCH ANDRUS No. C48753 Exp. 9-30-12 CIVIL STATE OF CALIFORNIA

THE STATE OF CALIFORNIA OR ITS OFFICERS OR AGENTS SHALL NOT BE RESPONSIBLE FOR THE ACCURACY OR COMPLETENESS OF ELECTRONIC COPIES OF THIS PLAN SHEET.

DS No.	FOR MORE INFORMATION SEE SHEET		
⬡	D-	DD-	ECD-
77	28	1	-
78	28	2,4,6,7,10,11	2

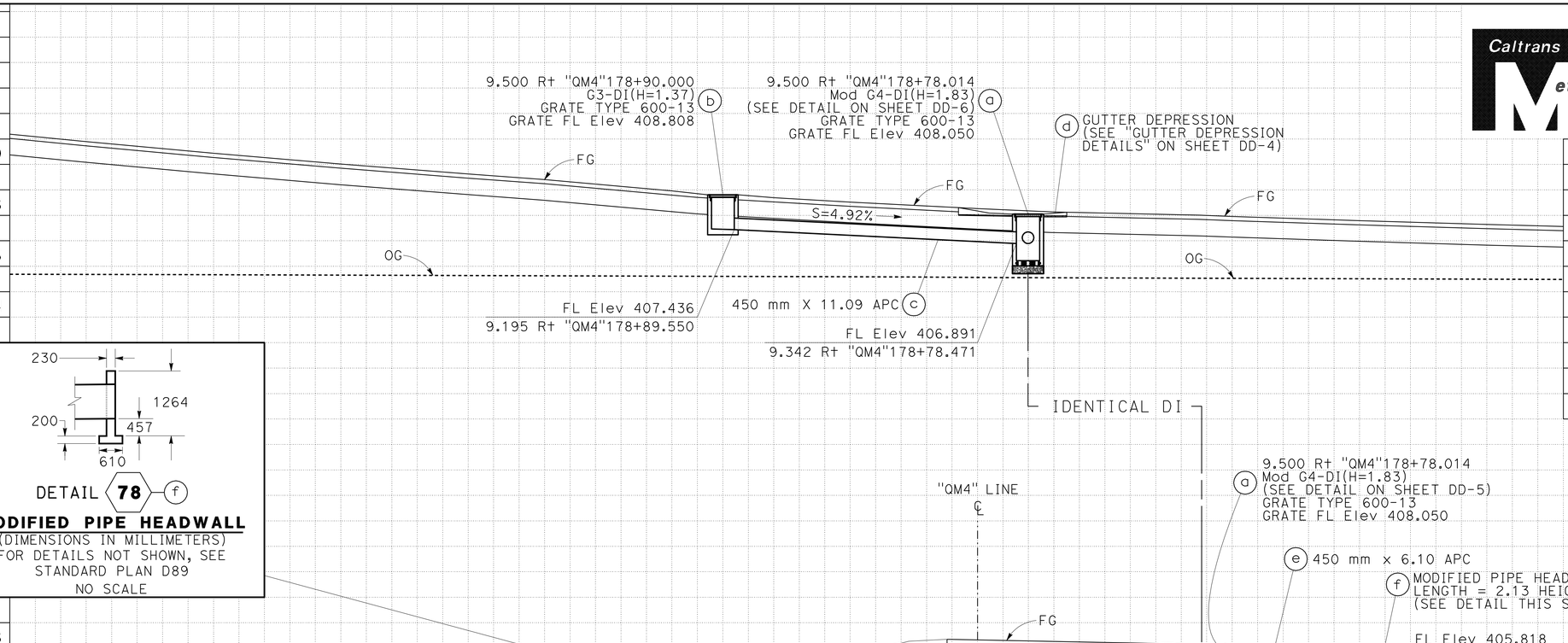

DRAINAGE SYSTEM (78)
"QM4"178+78.014
NO SKEW

DETAIL 78 (f)

MODIFIED PIPE HEADWALL
(DIMENSIONS IN MILLIMETERS)
FOR DETAILS NOT SHOWN, SEE STANDARD PLAN D89
NO SCALE

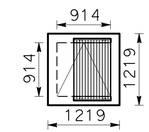

DETAIL 78 (a)

TYPE G4-DI
(DIMENSIONS IN MILLIMETERS)
FOR DETAILS NOT SHOWN, SEE STANDARD PLAN D73
NO SCALE

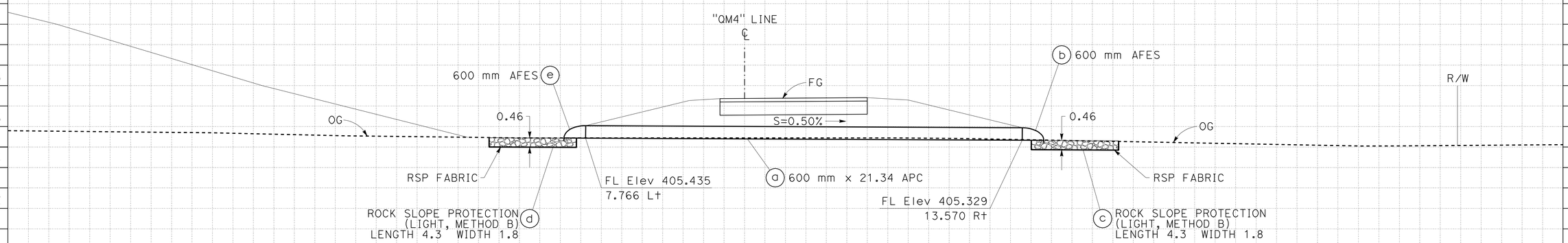

DRAINAGE SYSTEM (77)
"QM4"178+50.000
NO SKEW

APPROVED FOR DRAINAGE WORK ONLY.

ALL DIMENSIONS ARE IN METERS
UNLESS OTHERWISE SHOWN

DRAINAGE PROFILES

SCALE: Horiz 1:100
Vert 1:100

DP-51

REVISED BY	DATE REVISED
GMA	05-31-11

CALCULATED-DESIGNED BY: SCOTT FOSTER
CHECKED BY: KAO THAO
FUNCTIONAL SUPERVISOR: DOUGLAS S. JONES

STATE OF CALIFORNIA - DEPARTMENT OF TRANSPORTATION
Caltrans 03-DESIGN EAST

LAST REVISION 08-10-11 DATE PLOTTED => 28-JAN-2012 TIME PLOTTED => 06:57

Dist	COUNTY	ROUTE	KILOMETER POST TOTAL PROJECT	SHEET No.	TOTAL SHEETS
01	Men	101	R69.4/R78.9	326	939

Mitch Andrus 9-22-11
REGISTERED CIVIL ENGINEER DATE

1-23-12
PLANS APPROVAL DATE

REGISTERED PROFESSIONAL ENGINEER MITCH ANDRUS No. C48753 Exp. 9-30-12 CIVIL STATE OF CALIFORNIA

THE STATE OF CALIFORNIA OR ITS OFFICERS OR AGENTS SHALL NOT BE RESPONSIBLE FOR THE ACCURACY OR COMPLETENESS OF ELECTRONIC COPIES OF THIS PLAN SHEET.

Caltrans Metric

DS No.	FOR MORE INFORMATION SEE SHEET		
⬡	D-	DD-	ECD-
79	29	1,7,11	-
80	29	2,7,11	-

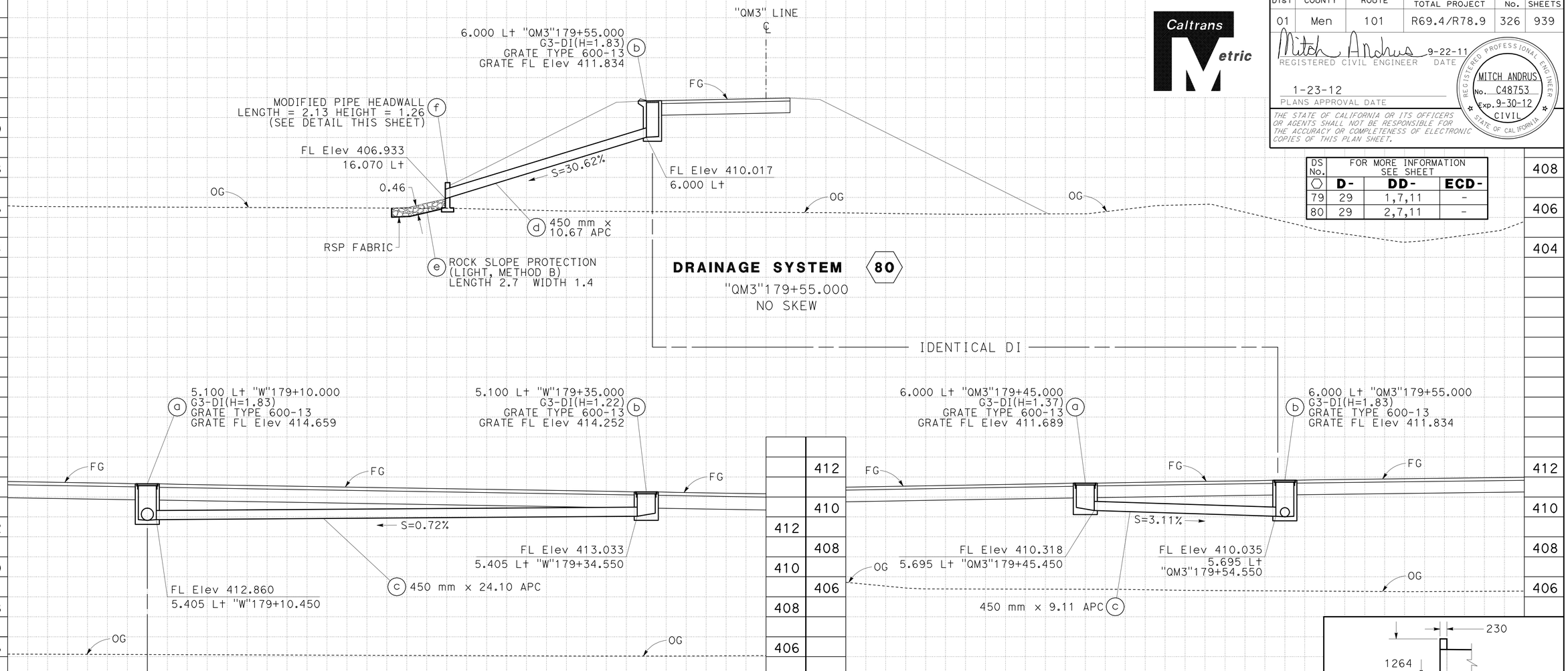

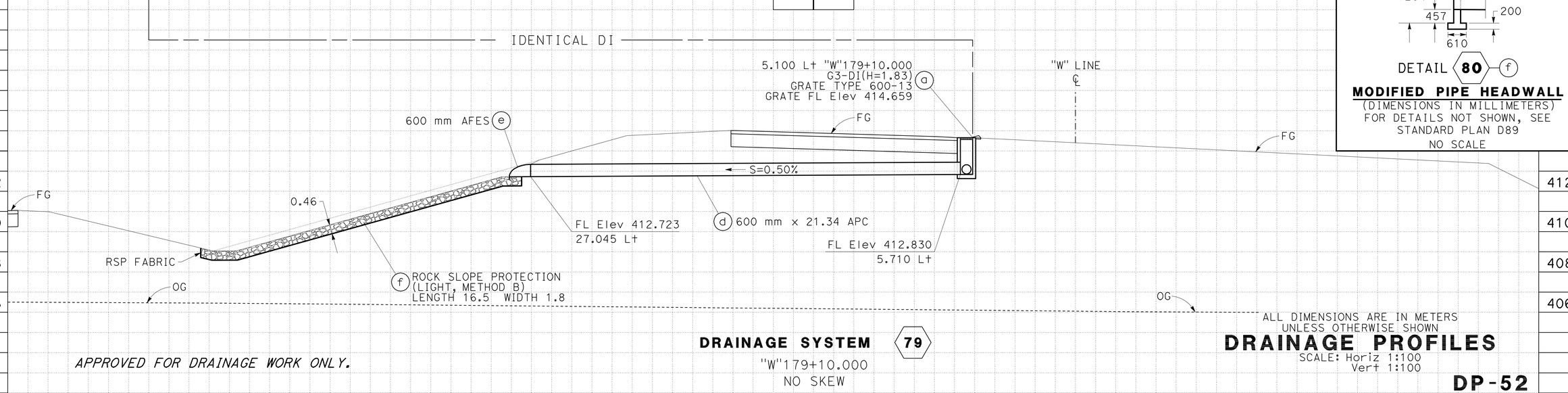

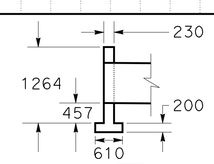

DETAIL 80 f

MODIFIED PIPE HEADWALL
(DIMENSIONS IN MILLIMETERS)
FOR DETAILS NOT SHOWN, SEE STANDARD PLAN D89
NO SCALE

DRAINAGE SYSTEM 79
"W"179+10.000
NO SKEW

ALL DIMENSIONS ARE IN METERS UNLESS OTHERWISE SHOWN

DRAINAGE PROFILES

SCALE: Horiz 1:100
Vert 1:100

APPROVED FOR DRAINAGE WORK ONLY.

DP-52

GMA	05-31-11	REVISED BY	DATE REVISED
SCOTT FOSTER	KAO THAO	CALCULATED-DESIGNED BY	CHECKED BY
FUNCTIONAL SUPERVISOR	DOUGLAS S. JONES		

STATE OF CALIFORNIA - DEPARTMENT OF TRANSPORTATION
Caltrans 03-DESIGN EAST

LAST REVISION 08-10-11 DATE PLOTTED => 28-JAN-2012 TIME PLOTTED => 06:57

DS No.	FOR MORE INFORMATION SEE SHEET		
⬡	D-	DD-	ECD-
81	29	1,10,11	-
82	29	1,4,7,11,44	-

Dist	COUNTY	ROUTE	KILOMETER POST TOTAL PROJECT	SHEET No.	TOTAL SHEETS
01	Men	101	R69.4/R78.9	327	939

Mitch Andrus 9-22-11
REGISTERED CIVIL ENGINEER DATE

1-23-12
PLANS APPROVAL DATE

REGISTERED PROFESSIONAL ENGINEER MITCH ANDRUS No. C48753 Exp. 9-30-12 CIVIL STATE OF CALIFORNIA

THE STATE OF CALIFORNIA OR ITS OFFICERS OR AGENTS SHALL NOT BE RESPONSIBLE FOR THE ACCURACY OR COMPLETENESS OF ELECTRONIC COPIES OF THIS PLAN SHEET.

Caltrans Metric

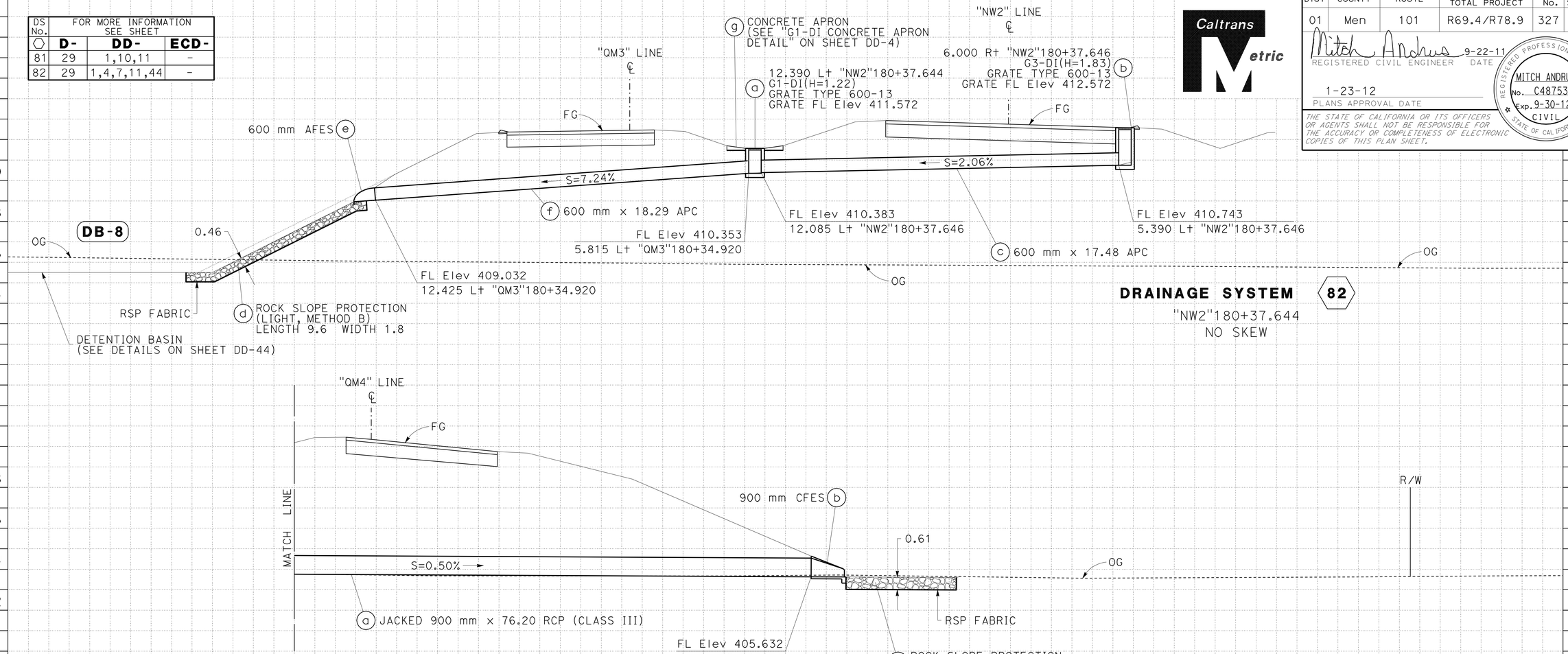

DRAINAGE SYSTEM (82)

"NW2"180+37.644
NO SKEW

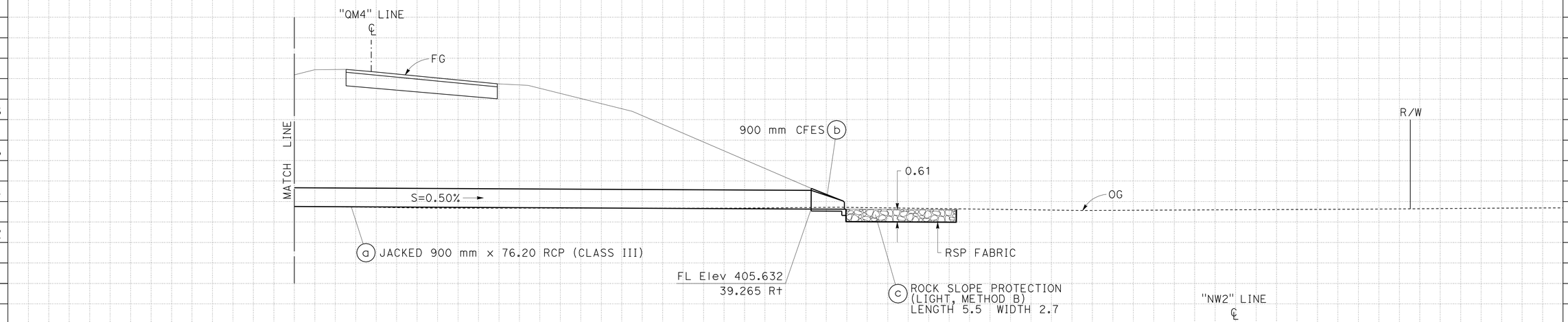

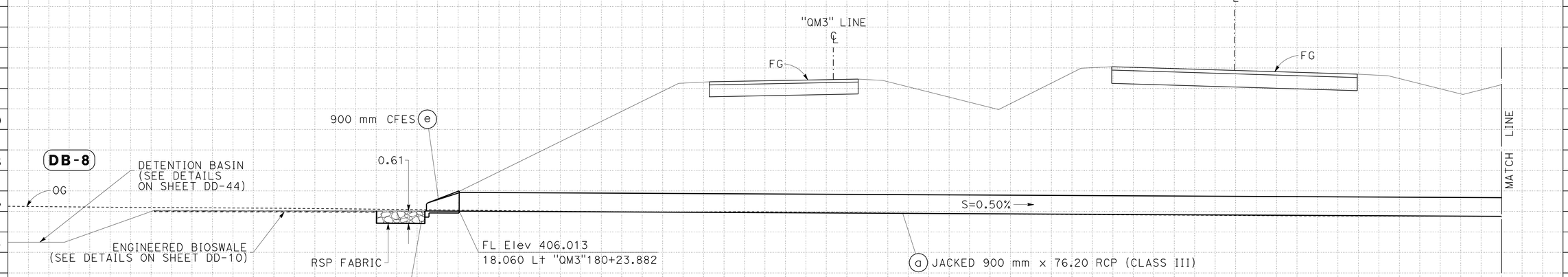

DRAINAGE SYSTEM (81)

"NW2"180+30.081
NO SKEW

ALL DIMENSIONS ARE IN METERS
UNLESS OTHERWISE SHOWN

DRAINAGE PROFILES

SCALE: Horiz 1:100
Vert 1:100

APPROVED FOR DRAINAGE WORK ONLY.

DP-53

STATE OF CALIFORNIA - DEPARTMENT OF TRANSPORTATION
Caltrans 03-DESIGN EAST

FUNCTIONAL SUPERVISOR: DOUGLAS S. JONES
CALCULATED-DESIGNED BY: SCOTT FOSTER
CHECKED BY: KAO THAO
REVISED BY: GMA
DATE REVISED: 05-31-11

LAST REVISION 08-10-11
DATE PLOTTED => 28-JAN-2012
TIME PLOTTED => 06:58

Dist	COUNTY	ROUTE	KILOMETER POST TOTAL PROJECT	SHEET No.	TOTAL SHEETS
01	Men	101	R69.4/R78.9	328	939

Mitch Andrus 9-22-11
REGISTERED CIVIL ENGINEER DATE

1-23-12
PLANS APPROVAL DATE

REGISTERED PROFESSIONAL ENGINEER MITCH ANDRUS No. C48753 Exp. 9-30-12 CIVIL STATE OF CALIFORNIA

THE STATE OF CALIFORNIA OR ITS OFFICERS OR AGENTS SHALL NOT BE RESPONSIBLE FOR THE ACCURACY OR COMPLETENESS OF ELECTRONIC COPIES OF THIS PLAN SHEET.

Caltrans Metric

DS No.	FOR MORE INFORMATION SEE SHEET		
⬡	D-	DD-	ECD-
83	29	2,4,7,11	-
84	29	1	-

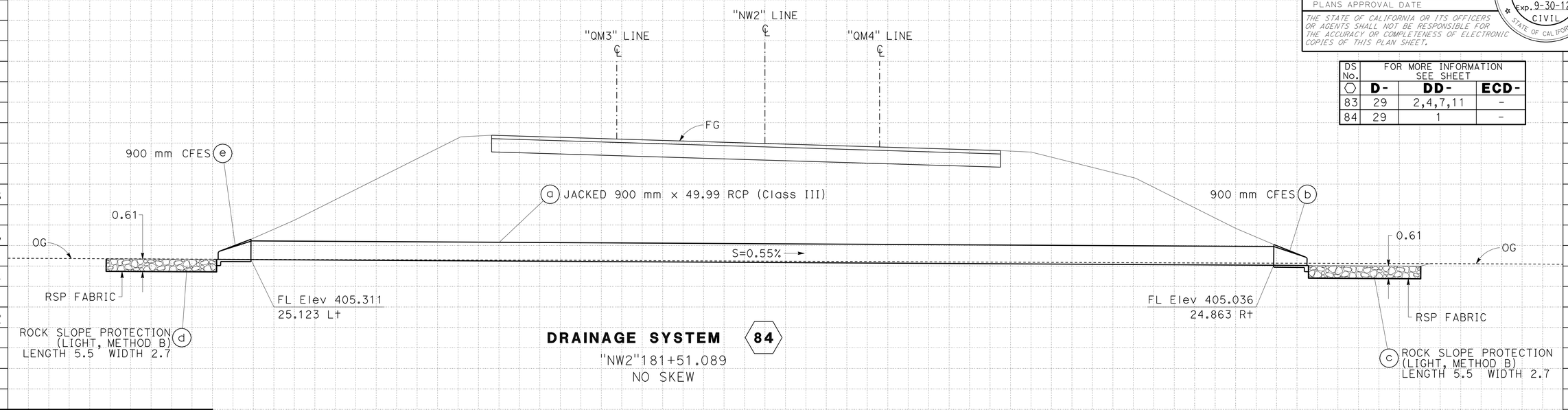

DRAINAGE SYSTEM (84)
"NW2"181+51.089
NO SKEW

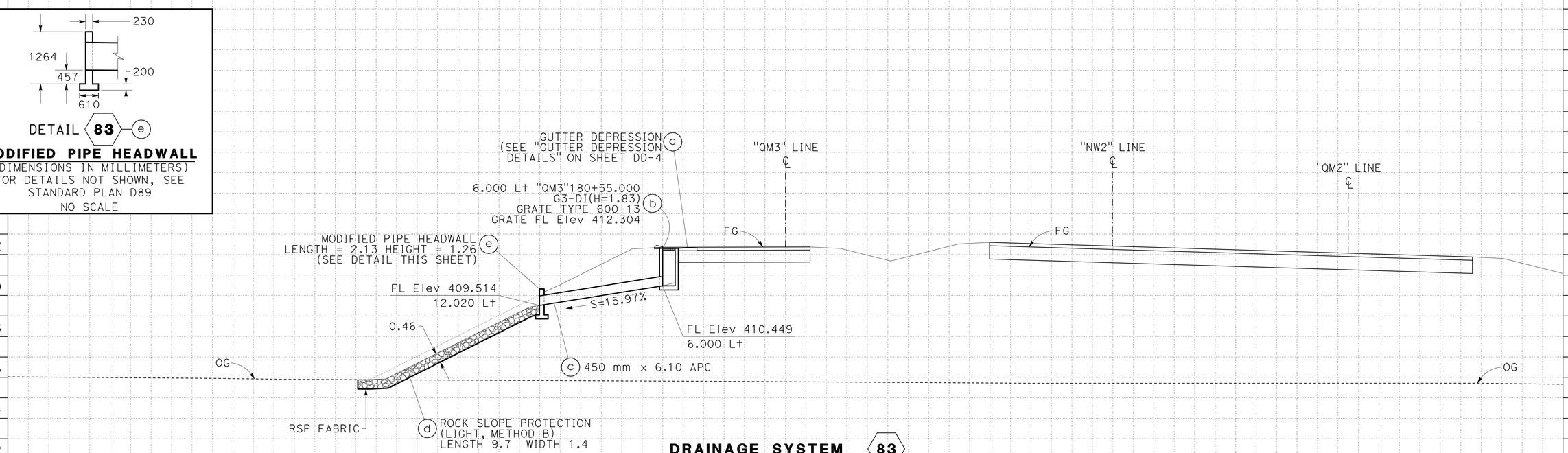

DRAINAGE SYSTEM (83)
"QM3"180+55.000
NO SKEW

APPROVED FOR DRAINAGE WORK ONLY.

ALL DIMENSIONS ARE IN METERS
UNLESS OTHERWISE SHOWN

DRAINAGE PROFILES

SCALE: Horiz 1:100
Vert 1:100

DP-54

REVISED BY	DATE REVISED
GMA	05-31-11

CALCULATED-DESIGNED BY: SCOTT FOSTER
CHECKED BY: KAO THAO
FUNCTIONAL SUPERVISOR: DOUGLAS S. JONES

STATE OF CALIFORNIA - DEPARTMENT OF TRANSPORTATION
Caltrans 03-DESIGN EAST

LAST REVISION 05-12-11
DATE PLOTTED => 28-JAN-2012
TIME PLOTTED => 06:58

DS No.	FOR MORE INFORMATION SEE SHEET		
⬡	D-	DD-	ECD-
85	31	1	-
86	31	2	-

Dist	COUNTY	ROUTE	KILOMETER POST TOTAL PROJECT	SHEET No.	TOTAL SHEETS
01	Men	101	R69.4/R78.9	329	939

Mitch Andrus 9-22-11
REGISTERED CIVIL ENGINEER DATE

1-23-12
PLANS APPROVAL DATE

REGISTERED PROFESSIONAL ENGINEER MITCH ANDRUS No. C48753 Exp. 9-30-12 CIVIL STATE OF CALIFORNIA

THE STATE OF CALIFORNIA OR ITS OFFICERS OR AGENTS SHALL NOT BE RESPONSIBLE FOR THE ACCURACY OR COMPLETENESS OF ELECTRONIC COPIES OF THIS PLAN SHEET.

Caltrans Metric

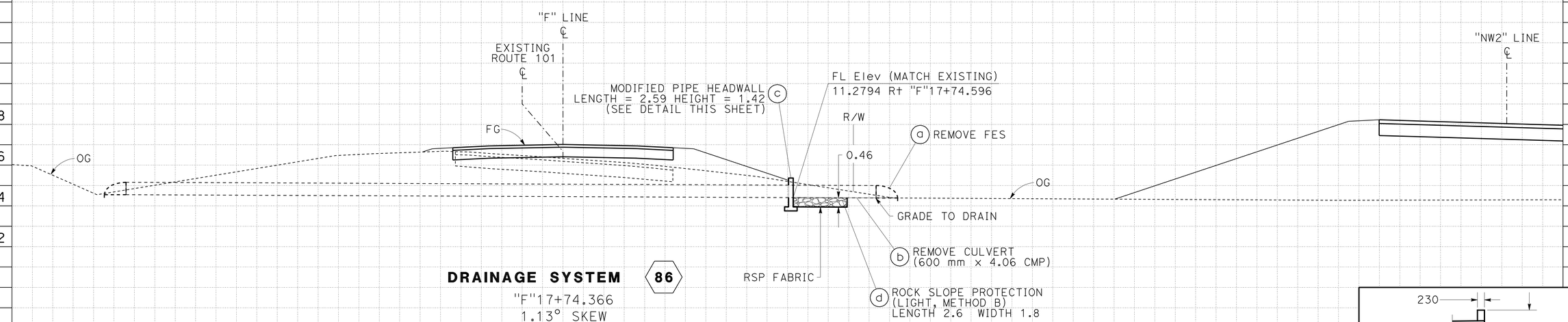

DRAINAGE SYSTEM (86)
"F"17+74.366
1.13° SKEW

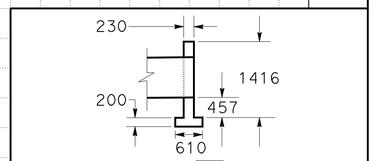

DETAIL (86) (c)
MODIFIED PIPE HEADWALL
(DIMENSIONS IN MILLIMETERS)
FOR DETAILS NOT SHOWN, SEE STANDARD PLAN D89
NO SCALE

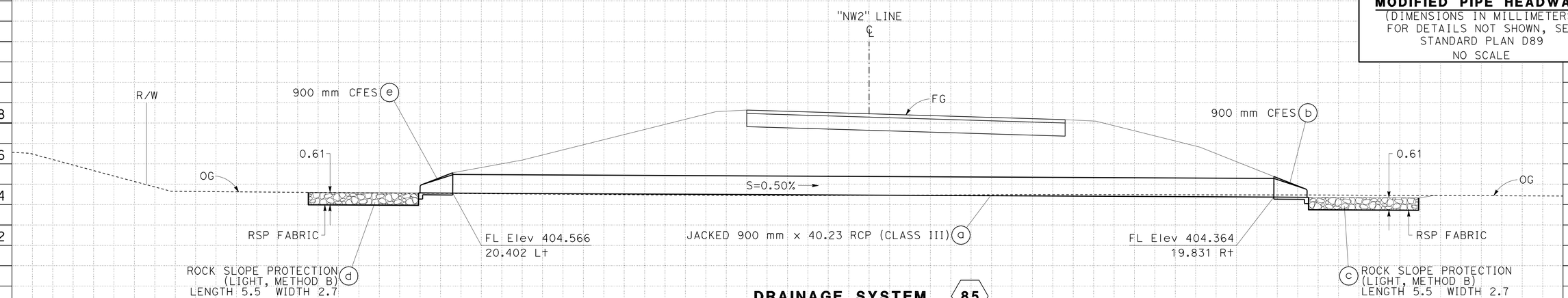

DRAINAGE SYSTEM (85)
"NW2"183+93.100
NO SKEW

APPROVED FOR DRAINAGE WORK ONLY.

ALL DIMENSIONS ARE IN METERS UNLESS OTHERWISE SHOWN

DRAINAGE PROFILES

SCALE: Horiz 1:100
Vert 1:100

DP-55

REVISED BY	DATE REVISED
GMA	05-31-11

CALCULATED-DESIGNED BY: SCOTT FOSTER
CHECKED BY: KAO THAO
FUNCTIONAL SUPERVISOR: DOUGLAS S. JONES

STATE OF CALIFORNIA - DEPARTMENT OF TRANSPORTATION
Caltrans 03-DESIGN EAST

LAST REVISION 08-11-11
DATE PLOTTED => 28-JAN-2012
TIME PLOTTED => 06:58

DS No.	FOR MORE INFORMATION SEE SHEET		
⬡	D-	DD-	ECD-
87	31	1,3,6,7,10	-
88	32	2,3	-

Dist	COUNTY	ROUTE	KILOMETER POST TOTAL PROJECT	SHEET No.	TOTAL SHEETS
01	Men	101	R69.4/R78.9	330	939

Caltrans Metric

Mitch Andrus 9-22-11
REGISTERED CIVIL ENGINEER DATE

1-23-12
PLANS APPROVAL DATE

REGISTERED PROFESSIONAL ENGINEER MITCH ANDRUS No. C48753 Exp. 9-30-12 CIVIL STATE OF CALIFORNIA

THE STATE OF CALIFORNIA OR ITS OFFICERS OR AGENTS SHALL NOT BE RESPONSIBLE FOR THE ACCURACY OR COMPLETENESS OF ELECTRONIC COPIES OF THIS PLAN SHEET.

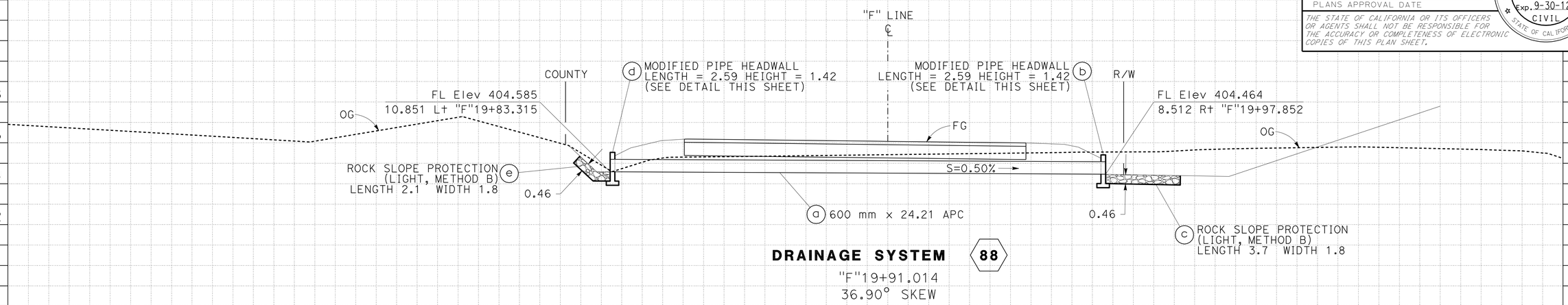

DRAINAGE SYSTEM ⬡ 88

"F"19+91.014
36.90° SKEW

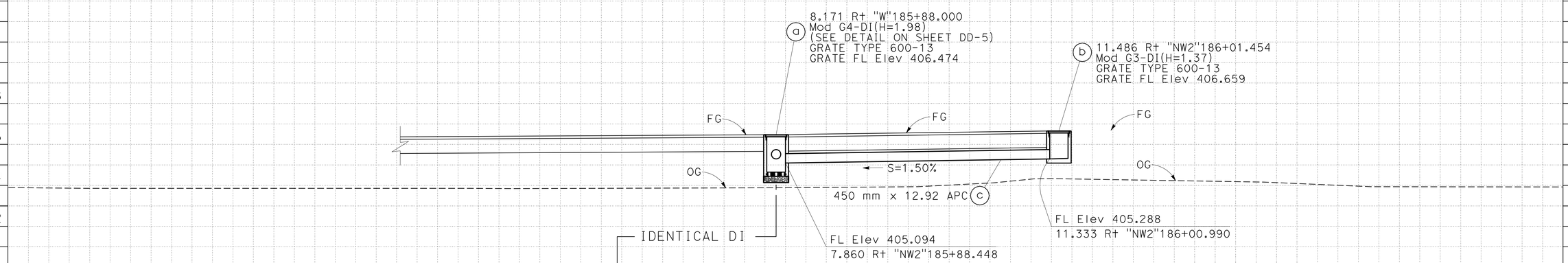

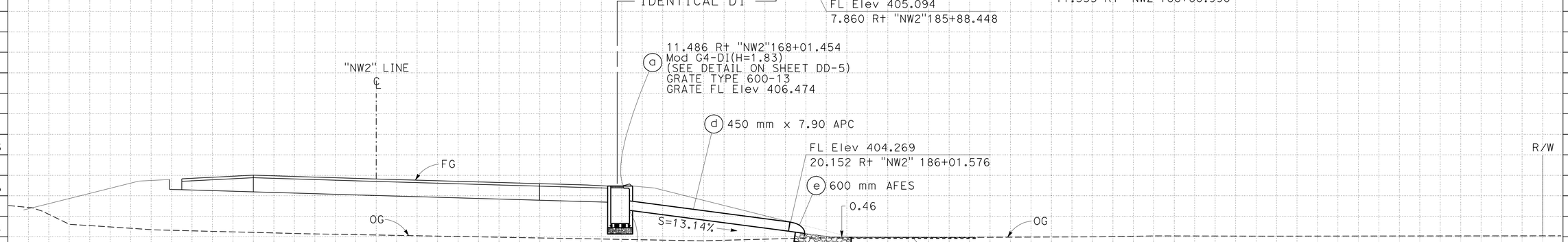

DRAINAGE SYSTEM ⬡ 87

"NW2"186+01.000
0.79° SKEW

APPROVED FOR DRAINAGE WORK ONLY.

ALL DIMENSIONS ARE IN METERS
UNLESS OTHERWISE SHOWN

DRAINAGE PROFILES

SCALE: Horiz 1:100
Vert 1:100

DP-56

REVISED BY	DATE REVISED
GMA	05-31-11

CALCULATED-DESIGNED BY: SCOTT FOSTER
CHECKED BY: KAO THAO
FUNCTIONAL SUPERVISOR: DOUGLAS S. JONES

STATE OF CALIFORNIA - DEPARTMENT OF TRANSPORTATION
Caltrans 03-DESIGN EAST

LAST REVISION 09-01-11 DATE PLOTTED => 28-JAN-2012 TIME PLOTTED => 06:58

Dist	COUNTY	ROUTE	KILOMETER POST TOTAL PROJECT	SHEET No.	TOTAL SHEETS
01	Men	101	R69.4/R78.9	331	939

Mitch Andrus 9-22-11
REGISTERED CIVIL ENGINEER DATE

1-23-12
PLANS APPROVAL DATE

REGISTERED PROFESSIONAL ENGINEER MITCH ANDRUS No. C48753 Exp. 9-30-12 CIVIL STATE OF CALIFORNIA

THE STATE OF CALIFORNIA OR ITS OFFICERS OR AGENTS SHALL NOT BE RESPONSIBLE FOR THE ACCURACY OR COMPLETENESS OF ELECTRONIC COPIES OF THIS PLAN SHEET.

Caltrans Metric

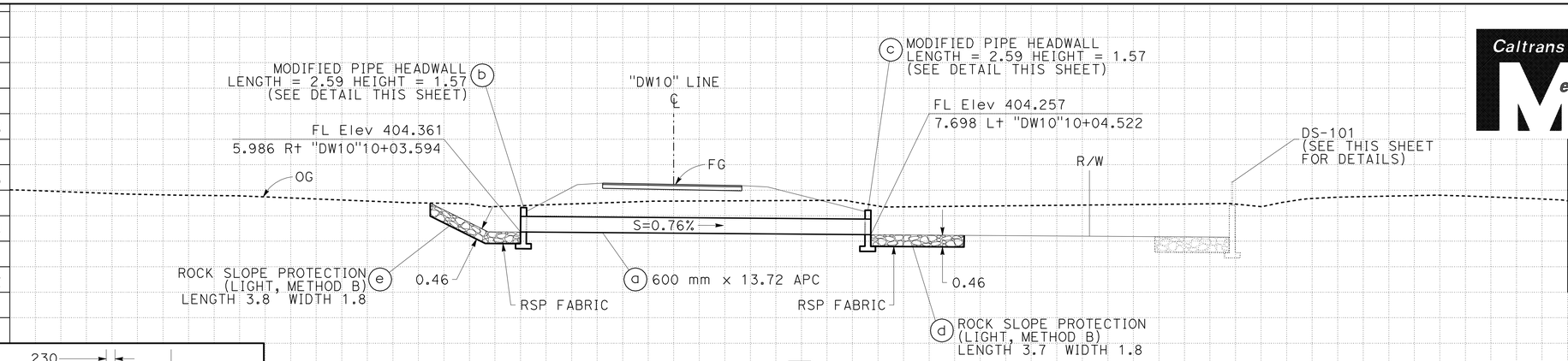

DRAINAGE SYSTEM 91

"DW10"10+04.000
13.87° SKEW

DS No.	FOR MORE INFORMATION SEE SHEET		
⬡	D-	DD-	ECD-
89	32	-	-
90	32	2,3	-
91	32	2	-

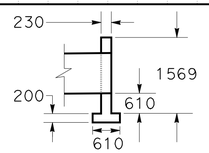

DETAIL 91 (b)(c)

MODIFIED PIPE HEADWALL
(DIMENSIONS IN MILLIMETERS)
FOR DETAILS NOT SHOWN, SEE
STANDARD PLAN D89
NO SCALE

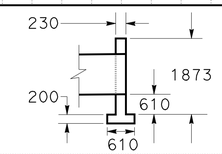

DETAIL 90 (b)(g)

MODIFIED PIPE HEADWALL
(DIMENSIONS IN MILLIMETERS)
FOR DETAILS NOT SHOWN, SEE
STANDARD PLAN D89
NO SCALE

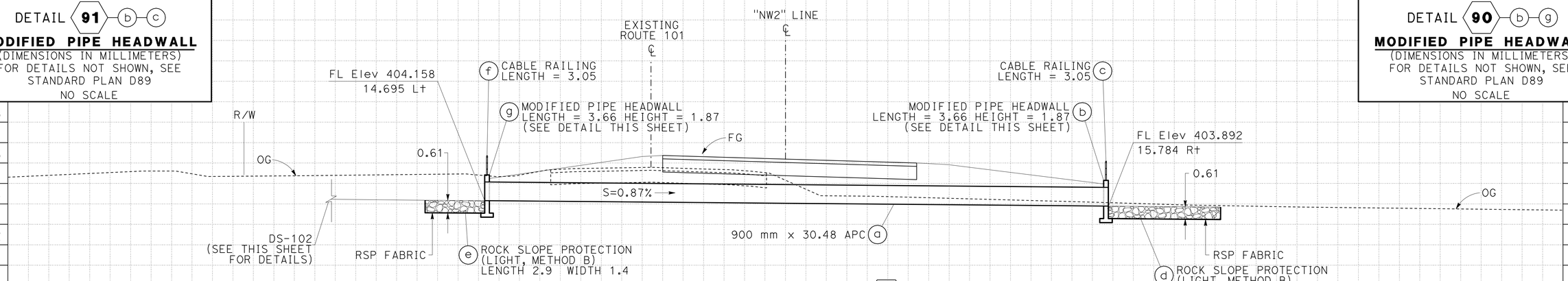

DRAINAGE SYSTEM 90

"NW2"187+15.689
NO SKEW

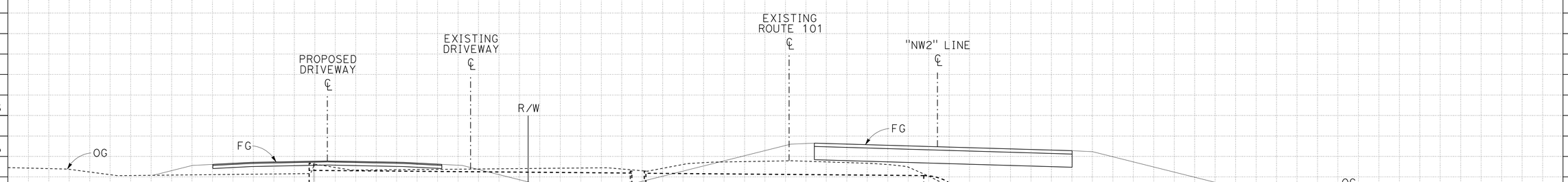

DRAINAGE SYSTEM 89

"NW2"187+09.916
7.616° SKEW

APPROVED FOR DRAINAGE WORK ONLY.

ALL DIMENSIONS ARE IN METERS
UNLESS OTHERWISE SHOWN

DRAINAGE PROFILES

SCALE: Horiz 1:100
Vert 1:100

DP-57

REVISED BY	DATE REVISED
GMA	05-31-11

CALCULATED-DESIGNED BY: SCOTT FOSTER
CHECKED BY: KAO THAO
FUNCTIONAL SUPERVISOR: DOUGLAS S. JONES

STATE OF CALIFORNIA - DEPARTMENT OF TRANSPORTATION
Caltrans 03-DESIGN EAST

LAST REVISION 09-01-11 DATE PLOTTED => 28-JAN-2012 TIME PLOTTED => 06:58

DS No.	FOR MORE INFORMATION SEE SHEET		
⬡	D-	DD-	ECD-
92	32	-	-
93	32	-	-

Dist	COUNTY	ROUTE	KILOMETER POST TOTAL PROJECT	SHEET No.	TOTAL SHEETS
01	Men	101	R69.4/R78.9	332	939

Mitch Andrus 9-22-11
REGISTERED CIVIL ENGINEER DATE

1-23-12
PLANS APPROVAL DATE

REGISTERED PROFESSIONAL ENGINEER
MITCH ANDRUS
No. C48753
Exp. 9-30-12
CIVIL
STATE OF CALIFORNIA

THE STATE OF CALIFORNIA OR ITS OFFICERS OR AGENTS SHALL NOT BE RESPONSIBLE FOR THE ACCURACY OR COMPLETENESS OF ELECTRONIC COPIES OF THIS PLAN SHEET.

Caltrans Metric

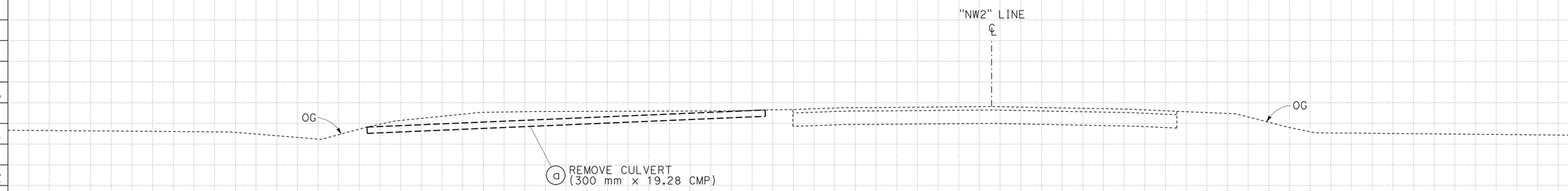

93 DRAINAGE SYSTEM
"NW2"188+60.180
55.603° SKEW

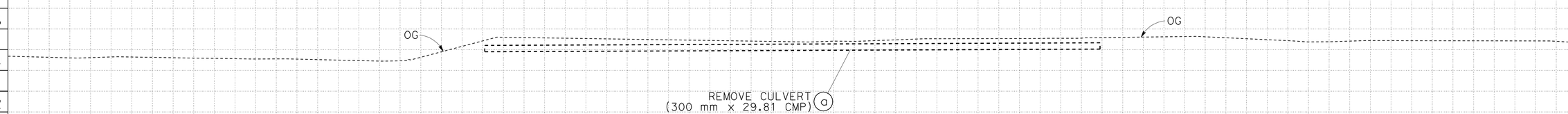

DRAINAGE SYSTEM 92
"NW2"187+29.459
PARALLEL

APPROVED FOR DRAINAGE WORK ONLY.

ALL DIMENSIONS ARE IN METERS
UNLESS OTHERWISE SHOWN

DRAINAGE PROFILES

SCALE: Horiz 1:100
Vert 1:100

DP-58

STATE OF CALIFORNIA - DEPARTMENT OF TRANSPORTATION
Caltrans 03-DESIGN EAST

FUNCTIONAL SUPERVISOR: DOUGLAS S. JONES
CALCULATED-DESIGNED BY: SCOTT FOSTER
CHECKED BY: KAO THAO
REVISED BY: GMA
DATE REVISED: 05-31-11

LAST REVISION 09-01-11
DATE PLOTTED => 28-JAN-2012
TIME PLOTTED => 06:58

DS No.	FOR MORE INFORMATION SEE SHEET		
⬡	D-	DD-	ECD-
94	32	1,3	-
95	32	-	-

Dist	COUNTY	ROUTE	KILOMETER POST TOTAL PROJECT	SHEET No.	TOTAL SHEETS
01	Men	101	R69.4/R78.9	333	939

Mitch Andrus 9-22-11
REGISTERED CIVIL ENGINEER DATE

1-23-12
PLANS APPROVAL DATE

REGISTERED PROFESSIONAL ENGINEER MITCH ANDRUS No. C48753 Exp. 9-30-12 CIVIL STATE OF CALIFORNIA

THE STATE OF CALIFORNIA OR ITS OFFICERS OR AGENTS SHALL NOT BE RESPONSIBLE FOR THE ACCURACY OR COMPLETENESS OF ELECTRONIC COPIES OF THIS PLAN SHEET.

Caltrans Metric

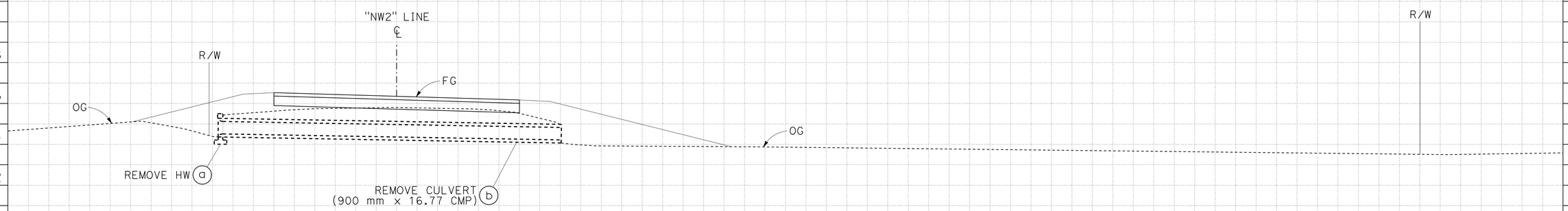

DRAINAGE SYSTEM (95)
"NW2"189+19.491
1.309° SKEW

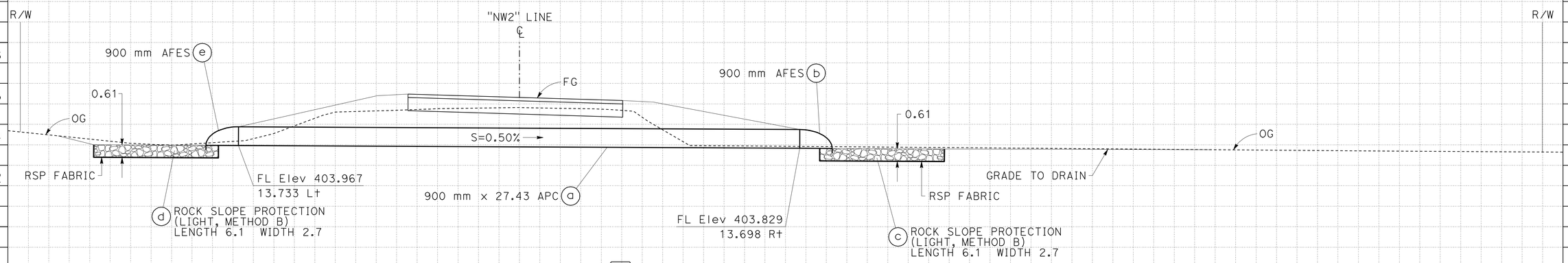

DRAINAGE SYSTEM (94)
"NW2"188+95.992
NO SKEW

APPROVED FOR DRAINAGE WORK ONLY.

ALL DIMENSIONS ARE IN METERS
UNLESS OTHERWISE SHOWN

DRAINAGE PROFILES

SCALE: Horiz 1:100
Vert 1:100

DP-59

REVISED BY	DATE REVISED
GMA	05-31-11

CALCULATED-DESIGNED BY: SCOTT FOSTER
CHECKED BY: KAO THAO
FUNCTIONAL SUPERVISOR: DOUGLAS S. JONES

STATE OF CALIFORNIA - DEPARTMENT OF TRANSPORTATION
Caltrans 03-DESIGN EAST

LAST REVISION 09-01-11
DATE PLOTTED => 28-JAN-2012
TIME PLOTTED => 06:58

NOTE:

1. FOR LENGTH, WIDTH AND THICKNESS OF RSP, SEE DRAINAGE PROFILE SHEETS.

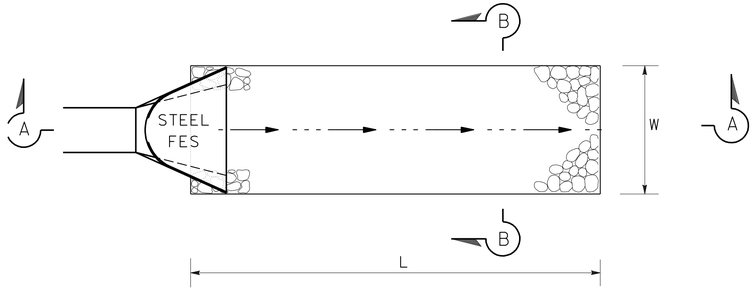

PLAN

ROCK SLOPE PROTECTION WITH STEEL FES FOR FLOW STRAIGHT IN OR STRAIGHT OUT

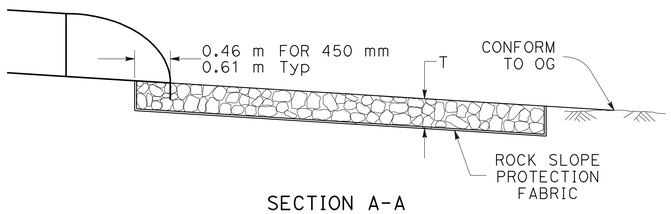

SECTION A-A

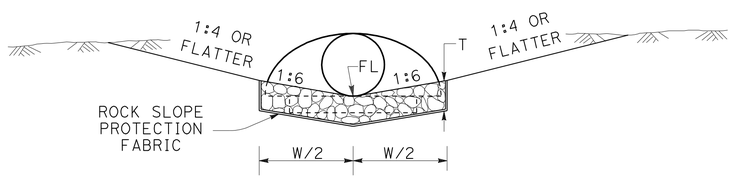

SECTION B-B

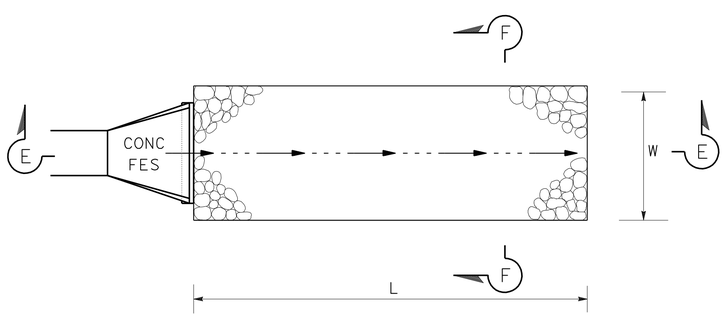

PLAN

ROCK SLOPE PROTECTION WITH CONCRETE FES FOR FLOW STRAIGHT IN OR STRAIGHT OUT

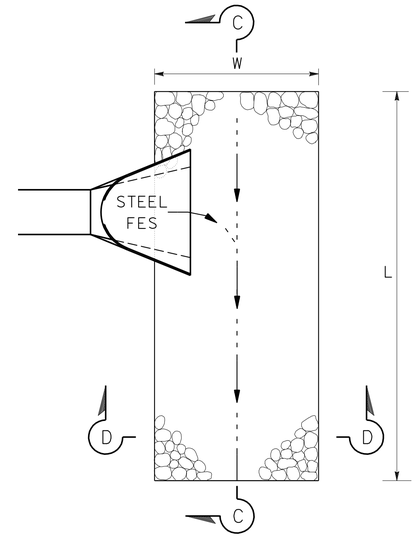

PLAN

ROCK SLOPE PROTECTION WITH STEEL FES FOR FLOW ANGLE IN OR ANGLE OUT

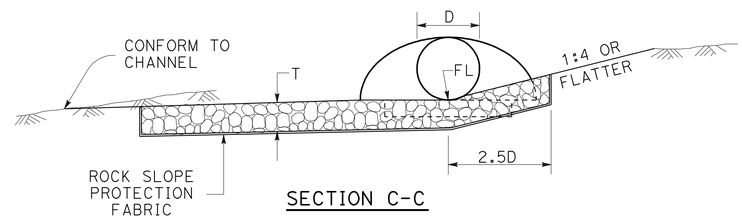

SECTION C-C

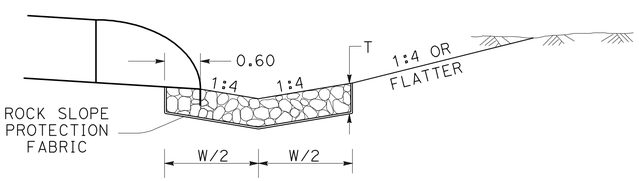

SECTION D-D

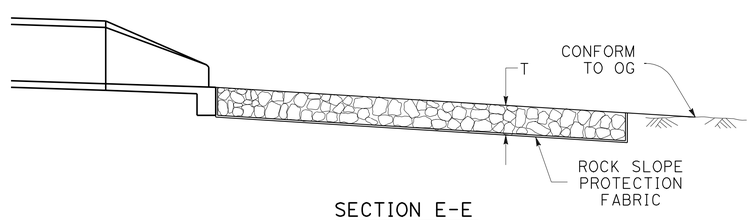

SECTION E-E

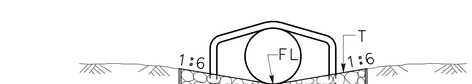

SECTION F-F

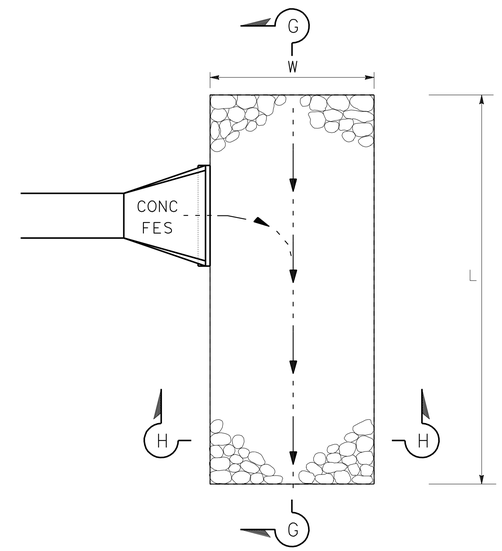

PLAN

ROCK SLOPE PROTECTION WITH CONCRETE FES FOR FLOW ANGLE IN OR ANGLE OUT

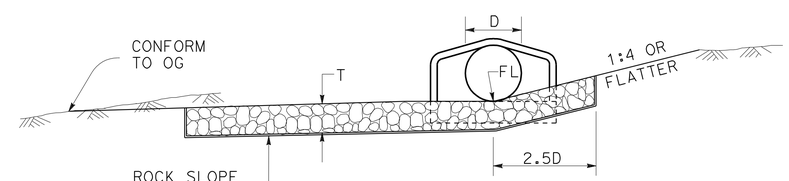

SECTION G-G

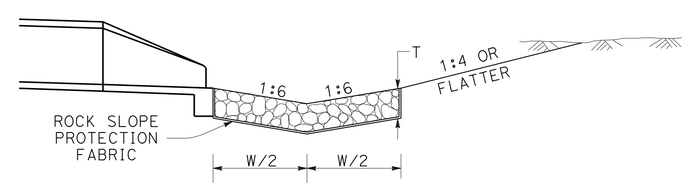

SECTION H-H

ALL DIMENSIONS ARE IN METERS UNLESS OTHERWISE SHOWN.

DRAINAGE DETAILS

NO SCALE

DD-1

Dist	COUNTY	ROUTE	KILOMETER POST TOTAL PROJECT	SHEET No.	TOTAL SHEETS
01	Men	101	R69.4/R78.9	334	939

Caltrans Metric

Mitch Andrus 9-22-11
REGISTERED CIVIL ENGINEER DATE

1-23-12
PLANS APPROVAL DATE

REGISTERED PROFESSIONAL ENGINEER MITCH ANDRUS No. C48753 Exp. 9-30-12 CIVIL STATE OF CALIFORNIA

THE STATE OF CALIFORNIA OR ITS OFFICERS OR AGENTS SHALL NOT BE RESPONSIBLE FOR THE ACCURACY OR COMPLETENESS OF ELECTRONIC COPIES OF THIS PLAN SHEET.

REVISED BY	DATE REVISED
MGA	05-30-11

CALCULATED-DESIGNED BY: KAO THAO
CHECKED BY: SCOTT FOSTER
FUNCTIONAL SUPERVISOR: DOUGLAS S. JONES

STATE OF CALIFORNIA - DEPARTMENT OF TRANSPORTATION
Caltrans 03-DESIGN EAST

LAST REVISION 05-30-11 | DATE PLOTTED => 28-JAN-2012 | TIME PLOTTED => 06:58

Dist	COUNTY	ROUTE	KILOMETER POST TOTAL PROJECT	SHEET No.	TOTAL SHEETS
01	Men	101	R69.4/R78.9	335	939

Mitch Andrus 9-22-11
REGISTERED CIVIL ENGINEER DATE

1-23-12
PLANS APPROVAL DATE

REGISTERED PROFESSIONAL ENGINEER MITCH ANDRUS No. C48753 Exp. 9-30-12 CIVIL STATE OF CALIFORNIA

THE STATE OF CALIFORNIA OR ITS OFFICERS OR AGENTS SHALL NOT BE RESPONSIBLE FOR THE ACCURACY OR COMPLETENESS OF ELECTRONIC COPIES OF THIS PLAN SHEET.

Caltrans Metric

NOTE:

1. FOR LENGTH, WIDTH AND THICKNESS OF RSP, SEE DRAINAGE PROFILE SHEETS.

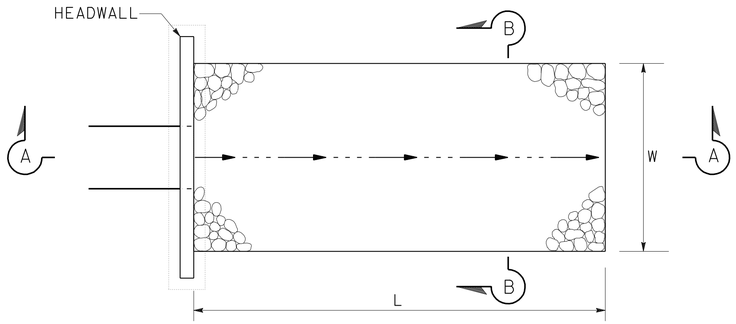

PLAN

ROCK SLOPE PROTECTION WITH HEADWALL FOR FLOW STRAIGHT IN OR STRAIGHT OUT

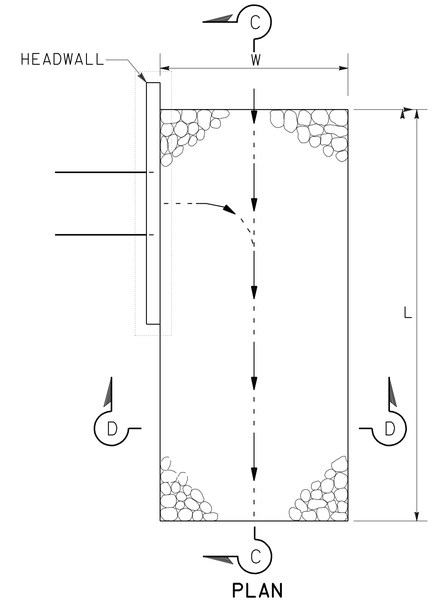

PLAN

ROCK SLOPE PROTECTION WITH HEADWALL FOR FLOW ANGLE IN OR ANGLE OUT

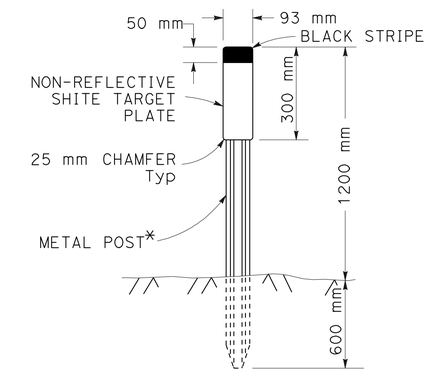

* SEE Std PLAN A73B FOR METAL POST DETAILS

CULVERT MARKER

SEE SHEET Q-6 FOR CULVERT MARKER LOCATIONS

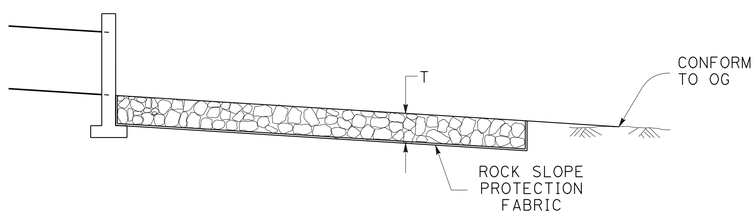

SECTION A-A

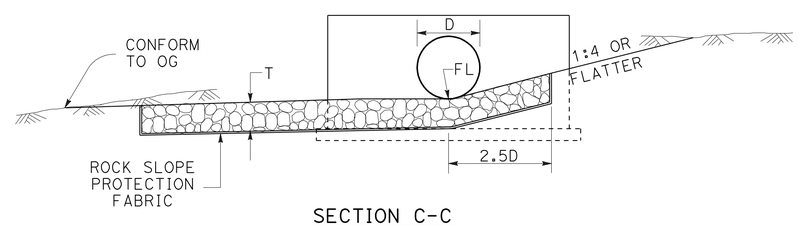

SECTION C-C

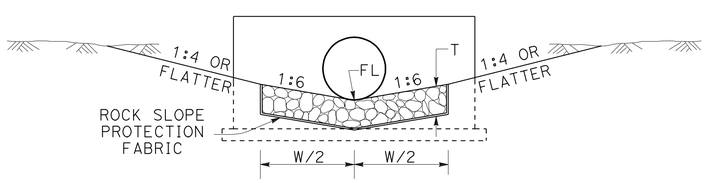

SECTION B-B

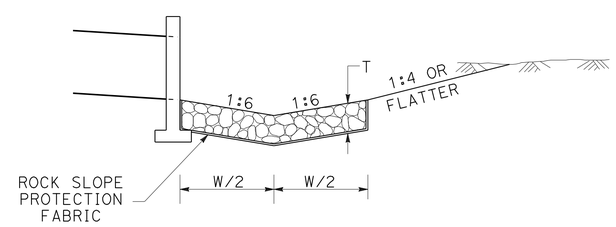

SECTION D-D

ALL DIMENSIONS ARE IN METERS UNLESS OTHERWISE SHOWN.

DRAINAGE DETAILS

NO SCALE

DD-2

MGA	REVISED BY
05-30-11	DATE REVISED
KAO THAO	CALCULATED-DESIGNED BY
SCOTT FOSTER	CHECKED BY
DOUGLAS S. JONES	FUNCTIONAL SUPERVISOR

STATE OF CALIFORNIA - DEPARTMENT OF TRANSPORTATION
Caltrans 03-DESIGN EAST

LAST REVISION 05-30-11 | DATE PLOTTED => 28-JAN-2012 | TIME PLOTTED => 06:58

Dist	COUNTY	ROUTE	KILOMETER POST TOTAL PROJECT	SHEET No.	TOTAL SHEETS
01	Men	101	R69.4/R78.9	336	939

Caltrans Metric

Mitch Andrus 9-22-11
REGISTERED CIVIL ENGINEER DATE

1-23-12
PLANS APPROVAL DATE

REGISTERED PROFESSIONAL ENGINEER MITCH ANDRUS No. C48753 Exp. 9-30-12 CIVIL STATE OF CALIFORNIA

THE STATE OF CALIFORNIA OR ITS OFFICERS OR AGENTS SHALL NOT BE RESPONSIBLE FOR THE ACCURACY OR COMPLETENESS OF ELECTRONIC COPIES OF THIS PLAN SHEET.

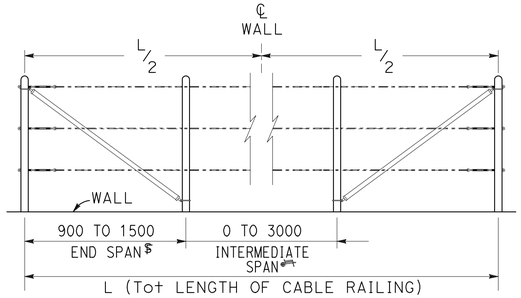

$WHERE ONLY END SPAN WILL BE USED, THE CENTERLINE OF THE RAILING WILL BE LOCATED AT THE CENTERLINE OF THE HEADWALL.

INTERMEDIATE POSTS WILL BE EVENLY SPACED WHEN MORE THEN ONE SPACE IS REQUIRED.

CABLE RAILING DETAIL

FOR DETAILS NOT SHOWN,
SEE Std PLAN B11-47; CABLE RAILING.

DRAINAGE SYSTEM No.

24-b-g, 37-f-j, 43-b-f,
48-g, 51-d-g, 52-d-g,
55-c-f, 57-c-f, 58-c-f,
60-c-f, 61-c-f, 90-c-f,

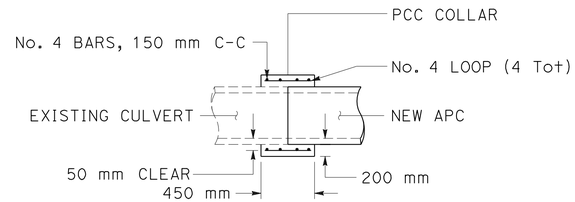

PCC COLLAR DETAIL

DRAINAGE SYSTEM No.

7

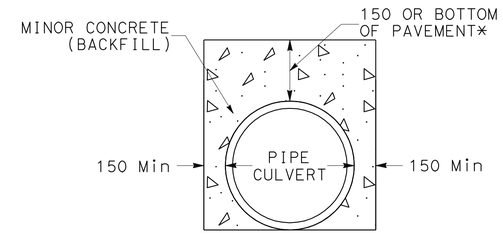

TRENCH EXCAVATION & BACKFILL DETAIL

DRAINAGE SYSTEM No.

51, 52, 64, 65,
66, 67, 88, 90,

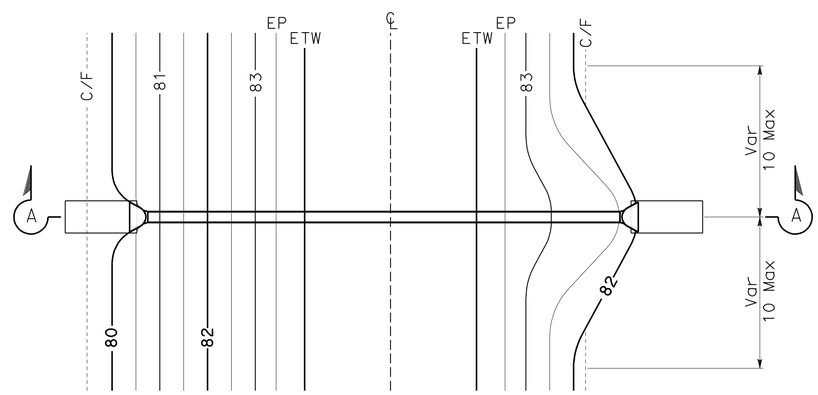

SLOPE FLATTENING AT CULVERTS
(TO OBTAIN CLEAR RECOVERY AREA)

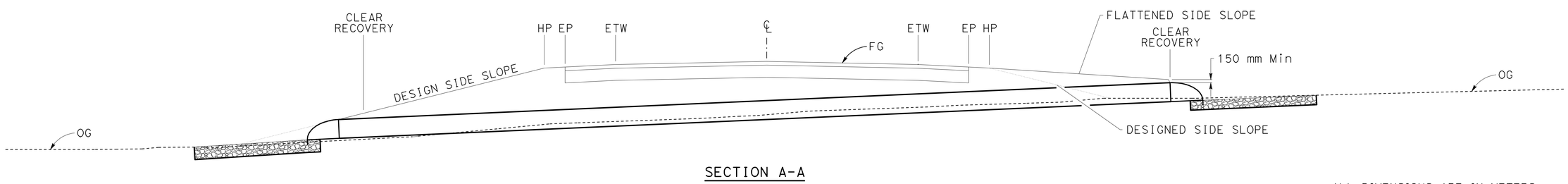

SECTION A-A

ALL DIMENSIONS ARE IN METERS
UNLESS OTHERWISE SHOWN.

DRAINAGE DETAILS

NO SCALE

DD-3

REVISED BY	DATE REVISED
MGA	05-30-11

KAO THAO — SCOTT FOSTER

CALCULATED-DESIGNED BY — CHECKED BY

FUNCTIONAL SUPERVISOR — DOUGLAS S. JONES

STATE OF CALIFORNIA - DEPARTMENT OF TRANSPORTATION
Caltrans 03-DESIGN EAST

LAST REVISION 08-11-11 — DATE PLOTTED => 28-JAN-2012 — TIME PLOTTED => 06:59

Dist	COUNTY	ROUTE	KILOMETER POST TOTAL PROJECT	SHEET No.	TOTAL SHEETS
01	Men	101	R69.4/R78.9	337	939

Caltrans Metric

Mitch Andrus 9-22-11
REGISTERED CIVIL ENGINEER DATE

1-23-12
PLANS APPROVAL DATE

REGISTERED PROFESSIONAL ENGINEER MITCH ANDRUS No. C48753 Exp. 9-30-12 CIVIL STATE OF CALIFORNIA

THE STATE OF CALIFORNIA OR ITS OFFICERS OR AGENTS SHALL NOT BE RESPONSIBLE FOR THE ACCURACY OR COMPLETENESS OF ELECTRONIC COPIES OF THIS PLAN SHEET.

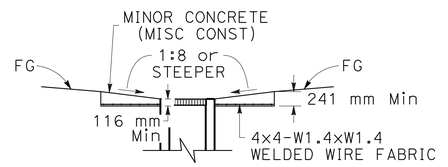

SECTION B-B

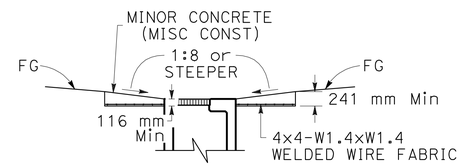

SECTION D-D

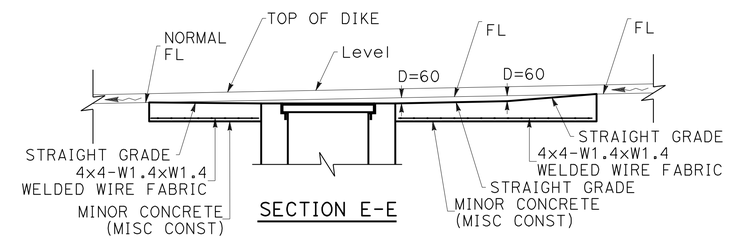

SECTION E-E

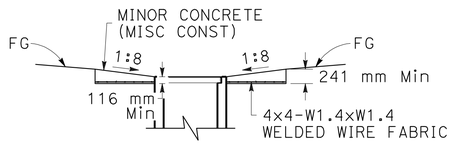

SECTION A-A

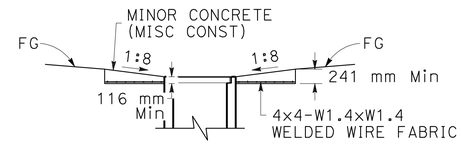

SECTION C-C

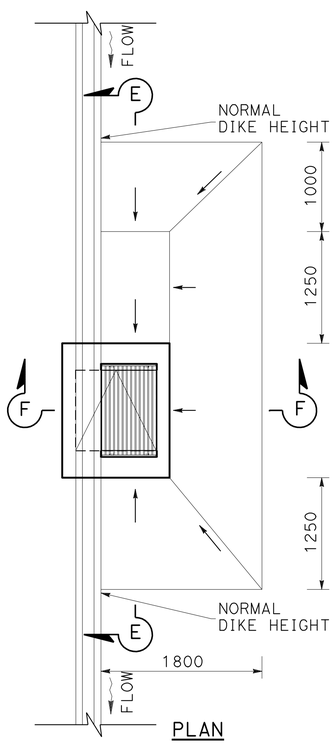

PLAN

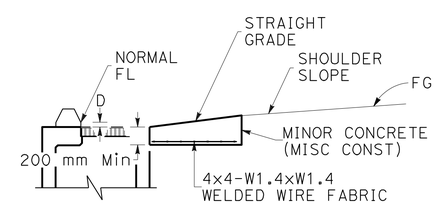

SECTION F-F

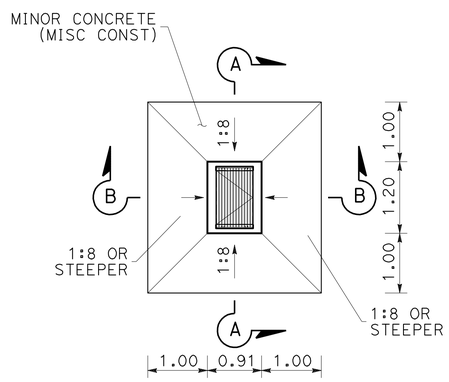

PLAN

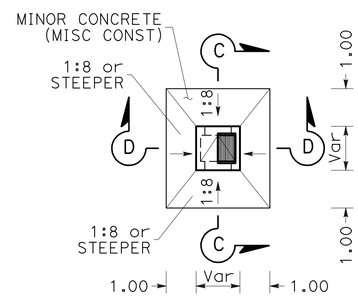

PLAN

DRAINAGE SYSTEM NO.

13-d-e, 14-e, 17-d-e,
18-d-e, 22-c-e, 25-g,
30-e-h-k, 32-e-g-j, 33-c,
41-c-g, 64-f, 66-f, 82-g

G1-DI CONCRETE APRON DETAIL
NO SCALE

DRAINAGE SYSTEM No.

7-e, 14-d, 25-e-m,
26-f-i, 36-c, 38-c,
73-hh-ii, 76-t-w

G2-DI CONCRETE APRON DETAIL
NO SCALE

DRAINAGE SYSTEM No.

78-d, 83-a

GUTTER DEPRESSION DETAILS
NO SCALE
(FOR DETAIL NOT SHOWN SEE Std PLAN D78)

ALL DIMENSIONS ARE IN METERS
UNLESS OTHERWISE SHOWN.

DRAINAGE DETAILS

NO SCALE

DD-4

MGA	05-30-11	KAO THAO	SCOTT FOSTER
REVISED BY	DATE REVISED	CALCULATED-DESIGNED BY	CHECKED BY

FUNCTIONAL SUPERVISOR: DOUGLAS S. JONES

STATE OF CALIFORNIA - DEPARTMENT OF TRANSPORTATION
Caltrans 03-DESIGN EAST

LAST REVISION 05-30-11 | DATE PLOTTED => 28-JAN-2012 | TIME PLOTTED => 06:59

Dist	COUNTY	ROUTE	KILOMETER POST TOTAL PROJECT	SHEET No.	TOTAL SHEETS
01	Men	101	R69.4/R78.9	338	939

Caltrans Metric

Mitch Andrus 9-22-11
REGISTERED CIVIL ENGINEER DATE

1-23-12
PLANS APPROVAL DATE

REGISTERED PROFESSIONAL ENGINEER MITCH ANDRUS No. C48753 Exp. 9-30-12 CIVIL STATE OF CALIFORNIA

THE STATE OF CALIFORNIA OR ITS OFFICERS OR AGENTS SHALL NOT BE RESPONSIBLE FOR THE ACCURACY OR COMPLETENESS OF ELECTRONIC COPIES OF THIS PLAN SHEET.

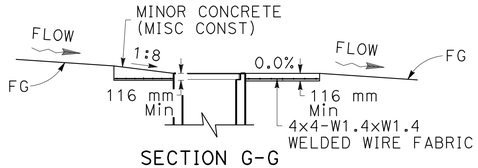

SECTION G-G

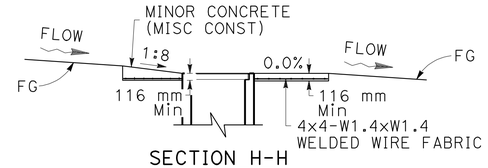

SECTION H-H

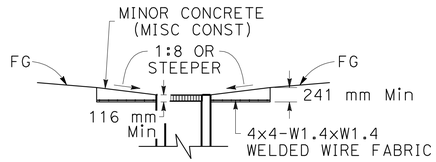

SECTION C-C

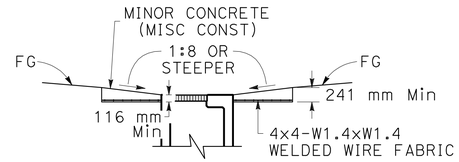

SECTION F-F

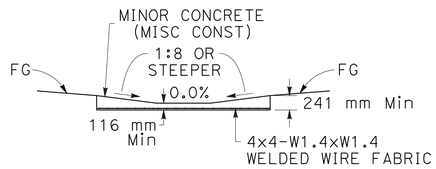

SECTION B-B

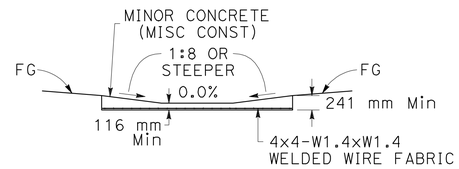

SECTION E-E

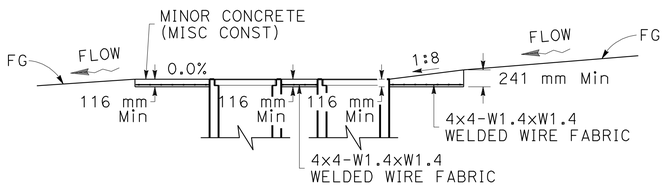

SECTION A-A

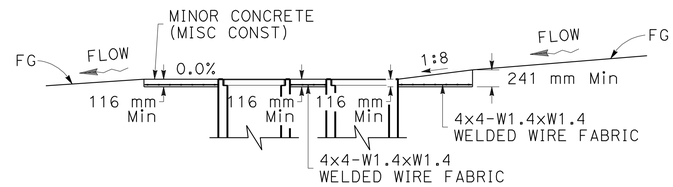

SECTION D-D

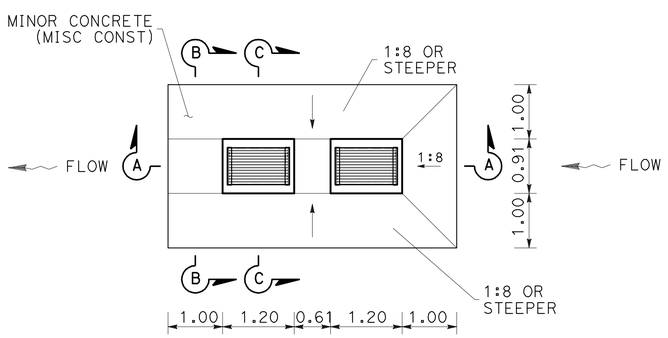

PLAN

DRAINAGE SYSTEM No.

1 c , 2 c , 5 c

DOUBLE G1-DI CONCRETE APRON DETAIL
(WITH SAND TRAP)

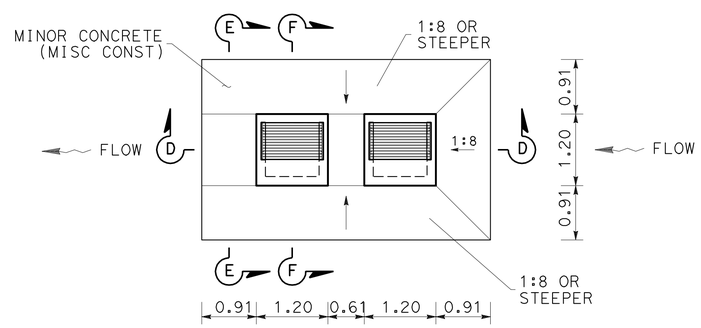

PLAN

DRAINAGE SYSTEM No.

6 d

DOUBLE G2-DI CONCRETE APRON DETAIL
(WITH SAND TRAP)

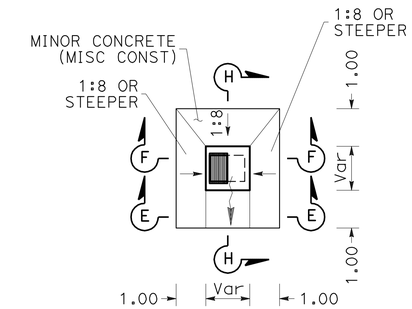

PLAN

DRAINAGE SYSTEM No.

7 e

G2-DI CONCRETE APRON DETAIL
(WITH SAND TRAP)

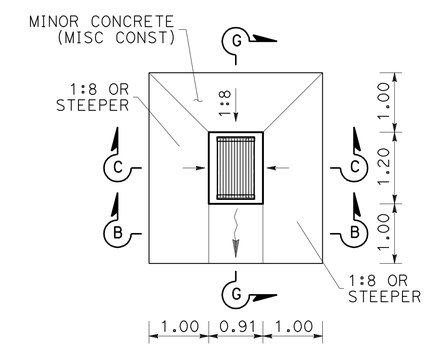

PLAN

DRAINAGE SYSTEM NO.

3 d , 10 b

G1-DI CONCRETE APRON DETAIL
(WITH SAND TRAP)

ALL DIMENSIONS ARE IN METERS
UNLESS OTHERWISE SHOWN.

DRAINAGE DETAILS

NO SCALE

DD-5

STATE OF CALIFORNIA - DEPARTMENT OF TRANSPORTATION
Caltrans 03-DESIGN EAST

FUNCTIONAL SUPERVISOR: DOUGLAS S. JONES
CALCULATED-DESIGNED BY: SCOTT FOSTER
CHECKED BY: KAO THAO
REVISED BY: MGA
DATE REVISED: 05-30-11

LAST REVISION 08-11-11 | DATE PLOTTED => 28-JAN-2012 | TIME PLOTTED => 06:59

Dist	COUNTY	ROUTE	KILOMETER POST TOTAL PROJECT	SHEET No.	TOTAL SHEETS
01	Men	101	R69.4/R78.9	339	939

Mitch Andrus 9-22-11
REGISTERED CIVIL ENGINEER DATE

1-23-12
PLANS APPROVAL DATE

REGISTERED PROFESSIONAL ENGINEER MITCH ANDRUS No. C48753 Exp. 9-30-12 CIVIL STATE OF CALIFORNIA

THE STATE OF CALIFORNIA OR ITS OFFICERS OR AGENTS SHALL NOT BE RESPONSIBLE FOR THE ACCURACY OR COMPLETENESS OF ELECTRONIC COPIES OF THIS PLAN SHEET.

Caltrans Metric

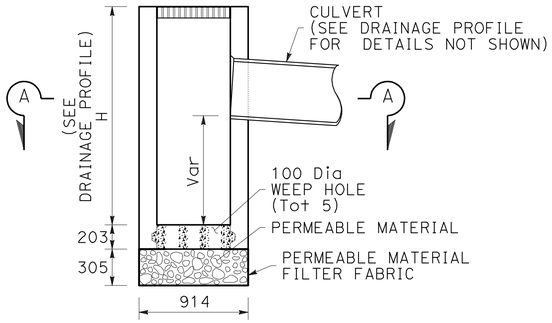

DRAINAGE SYSTEM No.

1-a-b, 2-a-b, 3-a, 5-a-b, 10-a,

MODIFIED G1 DI

FOR DETAILS NOT SHOWN,
SEE Std PLAN D73

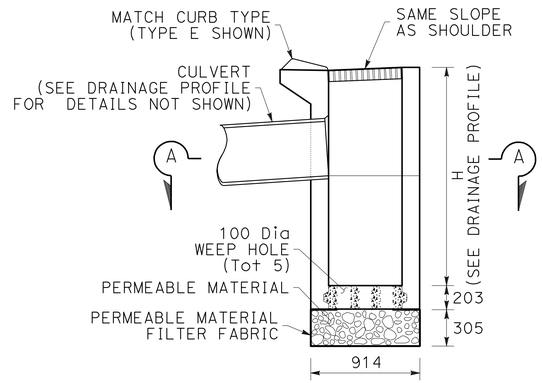

DRAINAGE SYSTEM No.

46-a-b, 47-a-b,

MODIFIED G3 DI

FOR DETAILS NOT SHOWN,
SEE Std PLAN D73

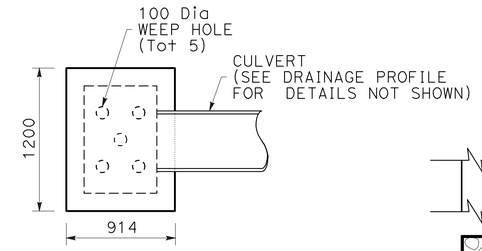

SECTION A-A

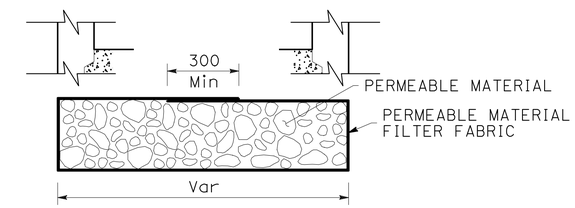

PERMEABLE MATERIAL FABRIC OVERLAP DETAIL

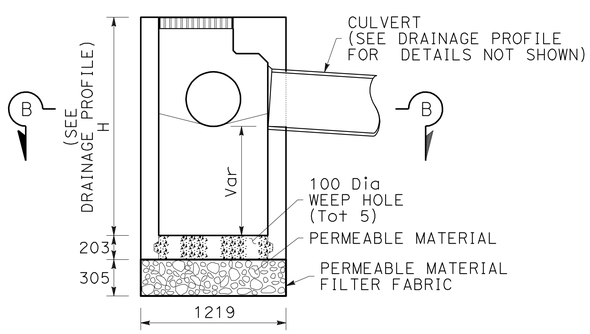

DRAINAGE SYSTEM No.

6-a-b, 36-a, 38-b, 76-v,

MODIFIED G2 DI

FOR DETAILS NOT SHOWN,
SEE Std PLAN D73

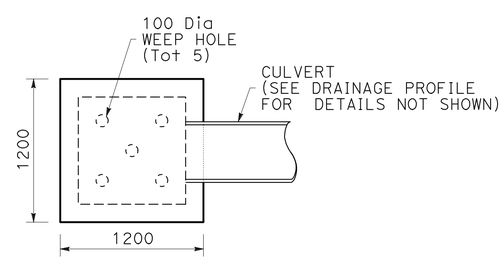

SECTION B-B

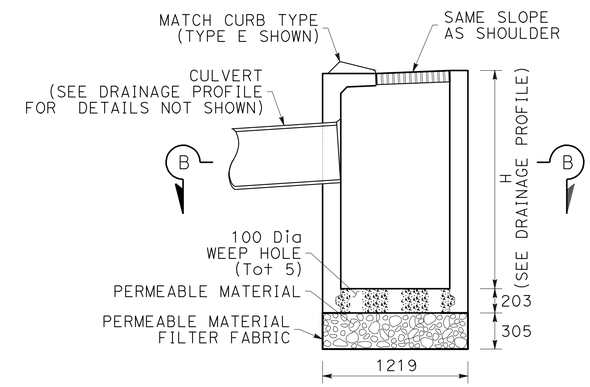

DRAINAGE SYSTEM No.

54-c, 56-a, 59-a-b, 78-a

MODIFIED G4 DI

FOR DETAILS NOT SHOWN,
SEE Std PLAN D73

ALL DIMENSIONS ARE IN METERS
UNLESS OTHERWISE SHOWN.

DRAINAGE DETAILS

NO SCALE

DD-6

STATE OF CALIFORNIA - DEPARTMENT OF TRANSPORTATION
Caltrans 03-DESIGN EAST

FUNCTIONAL SUPERVISOR: DOUGLAS S. JONES
CALCULATED-DESIGNED BY: SCOTT FOSTER
CHECKED BY: KAO THAO
REVISED BY: MGA
DATE REVISED: 05-30-11

LAST REVISION 08-11-11
DATE PLOTTED => 28-JAN-2012
TIME PLOTTED => 06:59

Dist	COUNTY	ROUTE	KILOMETER POST TOTAL PROJECT	SHEET No.	TOTAL SHEETS
01	Men	101	R69.4/R78.9	340	939

Mitch Andrus 9-22-11
REGISTERED CIVIL ENGINEER DATE

1-23-12
PLANS APPROVAL DATE

REGISTERED PROFESSIONAL ENGINEER MITCH ANDRUS No. C48753 Exp. 9-30-12 CIVIL STATE OF CALIFORNIA

THE STATE OF CALIFORNIA OR ITS OFFICERS OR AGENTS SHALL NOT BE RESPONSIBLE FOR THE ACCURACY OR COMPLETENESS OF ELECTRONIC COPIES OF THIS PLAN SHEET.

Caltrans Metric

NOTES:

1. THE STAMPED CONCRETE IMPRESSION SHALL BE LEGIBLE AND FREE OF BLEMISHES.
2. THE DIMENSIONS OF THE DRAINAGE INLET MARKER (STAMPED CONCRETE IMPRINT) SHALL VARY NO MORE THAN 25 mm IN WIDTH AND LENGTH.
3. THE DRAINAGE INLET MARKER SHALL BE CENTERED OPPOSITE THE DRAINAGE FACILITY.
4. THE TEXT, GRAPHIC AND BACKGROUND SHALL BE OF CONTRASTING COLORS FOR THE PLASTIC DRAINAGE INLET MARKERS.

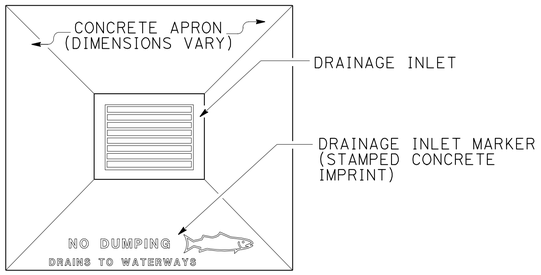

PLAN

DRAINAGE INLET MARKER ON DRAINAGE INLET APRON

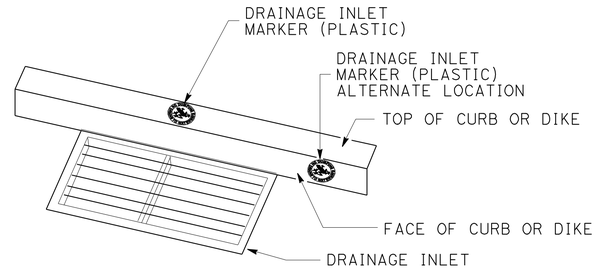

PERSPECTIVE

DRAINAGE INLET MARKER (PLASTIC) ON DRAINAGE INLET

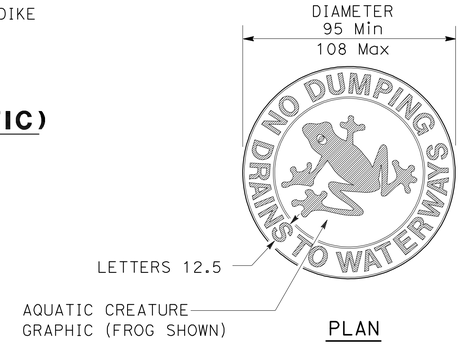

PLAN

DRAINAGE INLET MARKER (PLASTIC)

PLAN

DRAINAGE INLET MARKER (STAMPED CONCRETE IMPRINT)

DRAINAGE SYSTEM No.

1-c, 2-c, 3-d, 5-c, 6-d, 7-e,
10-b, 13-d-e, 14-d-e, 17-d-e, 18-c-e,
22-c-e, 25-e-g-m, 26-f-i, 30-e-h-k,
32-e-g-j, 33-c, 36-c, 38-c, 41-c-g,
64-f, 66-f, 73-hh-ii, 76-t-w, 82-g

DRAINAGE INLET MARKER (STAMPED CONCRETE IMPRINT)

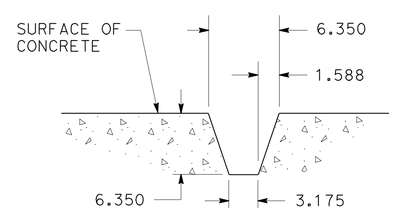

SECTION A-A

STAMPED CONCRETE IMPRINT DETAIL

DRAINAGE SYSTEM No.

22-f-g, 25-k, 26-a-b-j-l, 31-a,
42-a-b, 44-a-f, 46-a-b, 47-a-b,
49-a-e, 50-a-c-e-f-h, 54-a-c,
56-a, 59-a-b, 65-a-b-c-e, 67-a-e-h,
68-a-b, 69-a-b-c-i, 70-a-c,
73-a-d-e-f-g-h-i-j-k-l-m-n-o-p,
74-a-b, 76-a-b-g-i-k-x, 78-a-b,
79-a-b, 80-a-b, 82-b, 83-b, 87-a-b

DRAINAGE INLET MARKER (PLASTIC)

ALL DIMENSIONS ARE IN METERS UNLESS OTHERWISE SHOWN.

DRAINAGE DETAILS

NO SCALE

DD-7

REVISED BY	DATE REVISED
MGA	05-30-11

CALCULATED-DESIGNED BY: KAO THAO
CHECKED BY: SCOTT FOSTER
FUNCTIONAL SUPERVISOR: DOUGLAS S. JONES

STATE OF CALIFORNIA - DEPARTMENT OF TRANSPORTATION
Caltrans 03-DESIGN EAST

LAST REVISION 08-11-11
DATE PLOTTED => 28-JAN-2012
TIME PLOTTED => 06:59

Dist	COUNTY	ROUTE	KILOMETER POST TOTAL PROJECT	SHEET No.	TOTAL SHEETS
01	Men	101	R69.4/R78.9	341	939

Mitch Andrus 9-22-11
REGISTERED CIVIL ENGINEER DATE

1-23-12
PLANS APPROVAL DATE

REGISTERED PROFESSIONAL ENGINEER
MITCH ANDRUS
No. C48753
Exp. 9-30-12
CIVIL
STATE OF CALIFORNIA

THE STATE OF CALIFORNIA OR ITS OFFICERS OR AGENTS SHALL NOT BE RESPONSIBLE FOR THE ACCURACY OR COMPLETENESS OF ELECTRONIC COPIES OF THIS PLAN SHEET.

Caltrans Metric

DS No.	FOR MORE INFORMATION SEE SHEET		
⬡	D-	DP-	ECD-
73	27	45	-

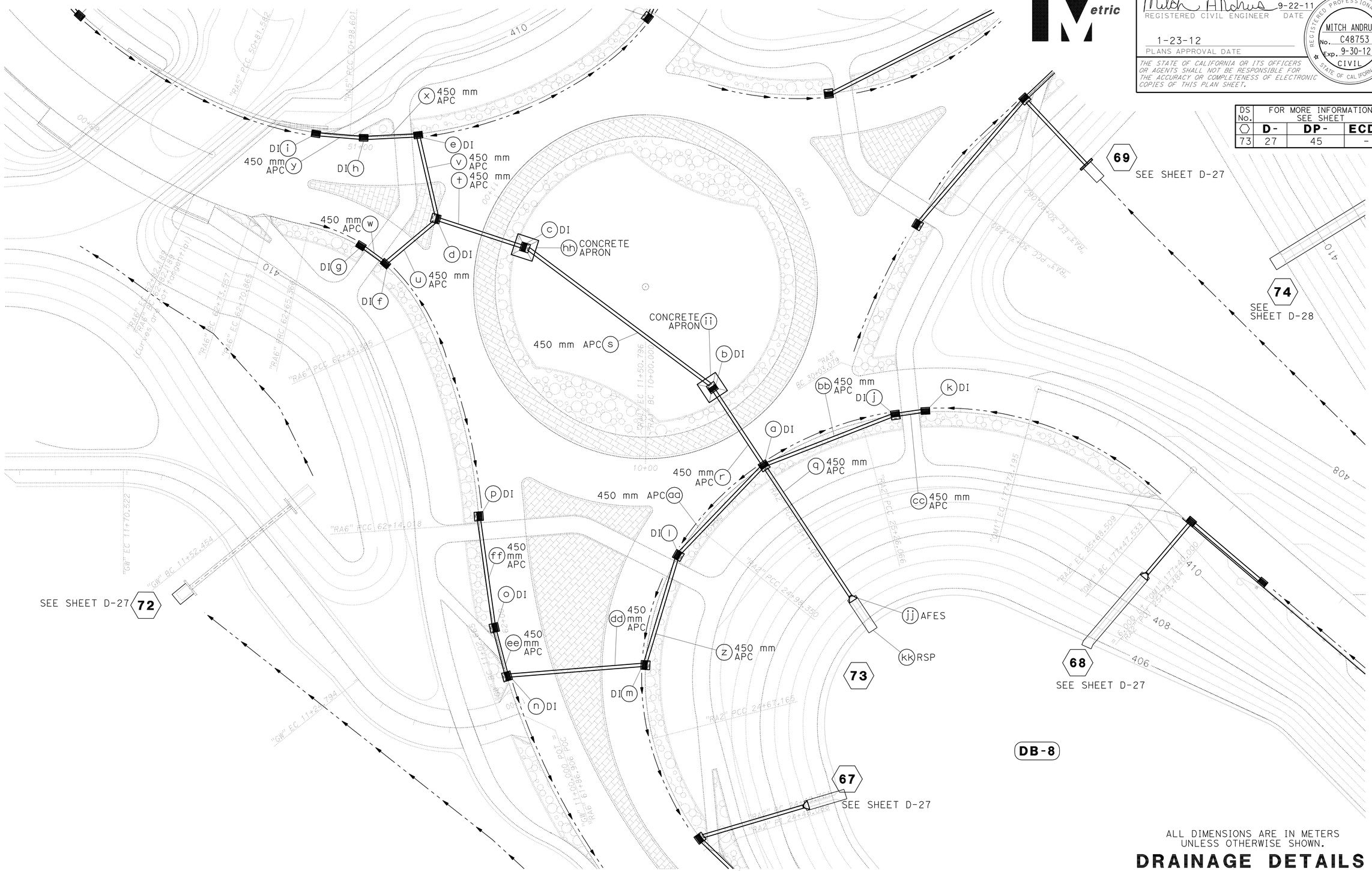

ALL DIMENSIONS ARE IN METERS
UNLESS OTHERWISE SHOWN.

DRAINAGE DETAILS

NO SCALE

DD-8

STATE OF CALIFORNIA - DEPARTMENT OF TRANSPORTATION
Caltrans 03-DESIGN EAST

FUNCTIONAL SUPERVISOR: DOUGLAS S. JONES
CALCULATED-DESIGNED BY: SCOTT FOSTER
CHECKED BY: KAO THAO
REVISED BY: MGA
DATE REVISED: 05-30-11

LAST REVISION: 08-11-11
DATE PLOTTED => 28-JAN-2012
TIME PLOTTED => 06:59

Dist	COUNTY	ROUTE	KILOMETER POST TOTAL PROJECT	SHEET No.	TOTAL SHEETS
01	Men	101	R69.4/R78.9	342	939

Mitch Andrus 9-22-11
REGISTERED CIVIL ENGINEER DATE

1-23-12
PLANS APPROVAL DATE

REGISTERED PROFESSIONAL ENGINEER
MITCH ANDRUS
No. C48753
Exp. 9-30-12
CIVIL
STATE OF CALIFORNIA

THE STATE OF CALIFORNIA OR ITS OFFICERS OR AGENTS SHALL NOT BE RESPONSIBLE FOR THE ACCURACY OR COMPLETENESS OF ELECTRONIC COPIES OF THIS PLAN SHEET.

Caltrans Metric

NOTES:

1. FOR AREA AND THICKNESS OF RSP, SEE DRAINAGE DETAIL SHEET DD-11.
2. DETAILS ON THIS SHEET DEPICT FES TREATMENT ONLY. FOR HEADWALL DETAILS NOT SHOWN SEE SHEET DD-2.
3. DETAILS ON THIS SHEET DEPICT DRAINAGE ONLY. FOR EROSION CONTROL DETAILS NOT SHOWN SEE SHEET ECD-1.
4. FOR DIMENSION "L" AND "W", SEE SHEET DD-11 UNDER BIOSWALE DIMENSIONS.

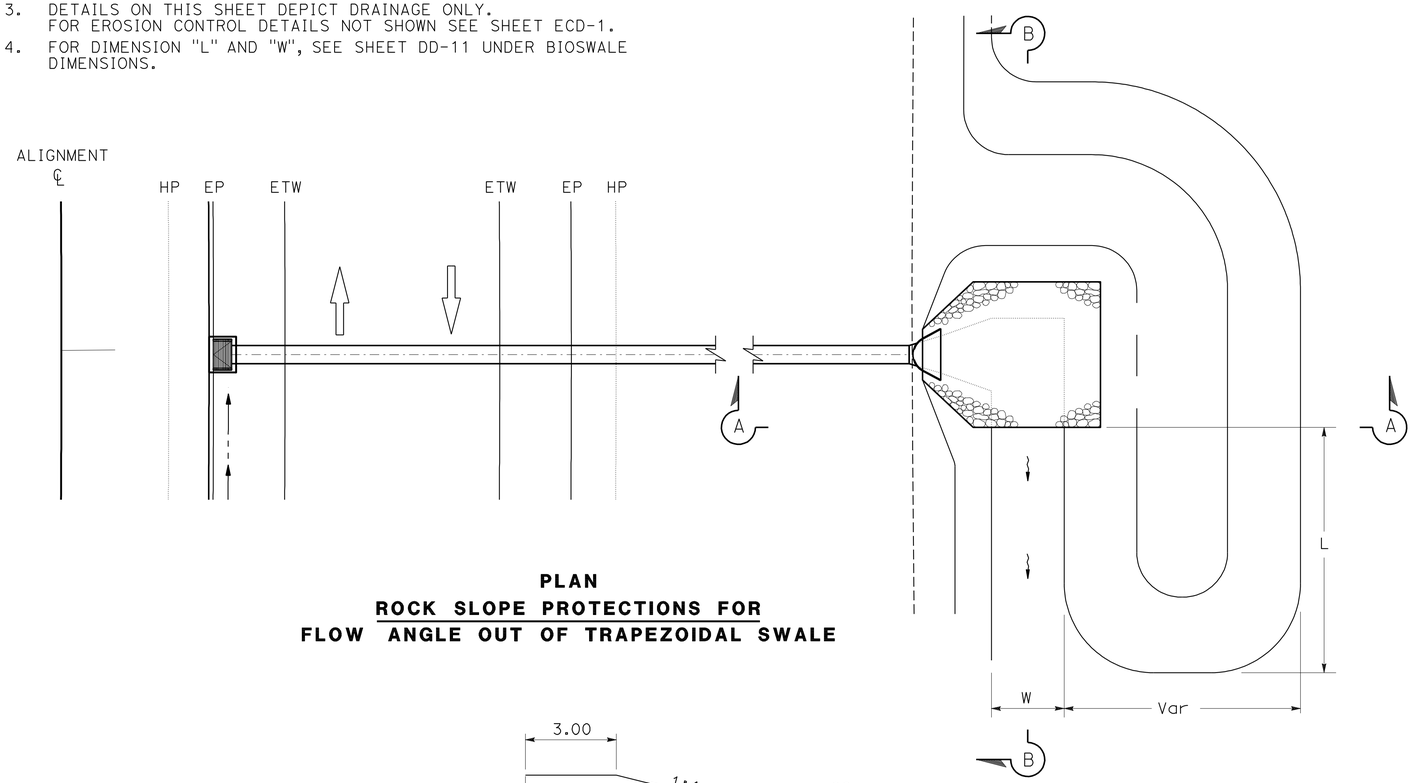

PLAN
ROCK SLOPE PROTECTIONS FOR
FLOW ANGLE OUT OF TRAPEZOIDAL SWALE

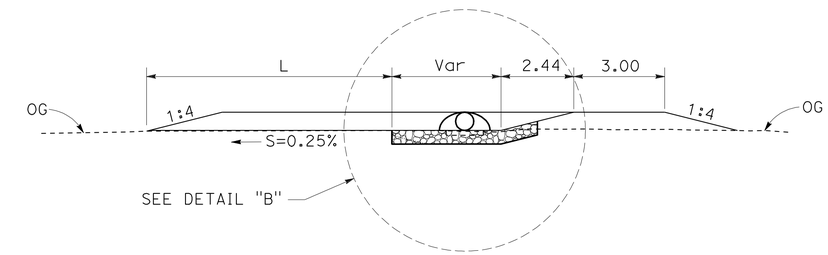

SECTION B-B

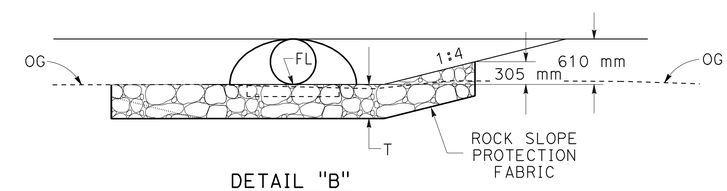

DETAIL "B"

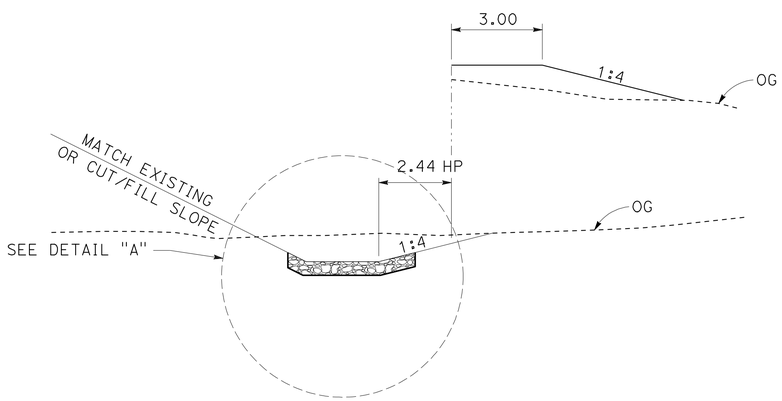

SECTION A-A

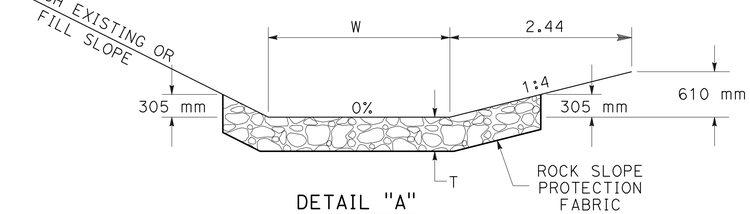

DETAIL "A"

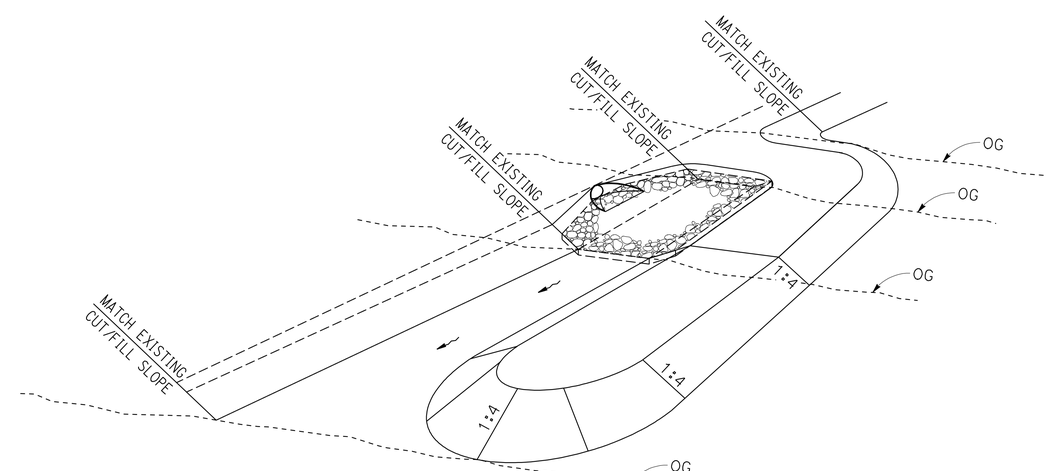

PERSPECTIVE
IN TRAPEZOIDAL SWALE

ALL DIMENSIONS ARE IN METERS UNLESS OTHERWISE SHOWN.

DRAINAGE DETAILS

NO SCALE

DD-9

STATE OF CALIFORNIA - DEPARTMENT OF TRANSPORTATION
Caltrans 03-DESIGN EAST

FUNCTIONAL SUPERVISOR: DOUGLAS S. JONES
CALCULATED-DESIGNED BY: KAO THAO
CHECKED BY: SCOTT FOSTER
REVISED BY: MGA
DATE REVISED: 05-30-11

LAST REVISION 08-11-11
DATE PLOTTED => 28-JAN-2012
TIME PLOTTED => 07:00

NOTES:

1. FOR AREA AND THICKNESS OF RSP, SEE DRAINAGE DETAIL SHEET DD-11.
2. DETAILS ON THIS SHEET DEPICT FES TREATMENT ONLY. FOR HEADWALL DETAILS NOT SHOWN SEE SHEET DD-2.
3. DETAILS ON THIS SHEET DEPICT DRAINAGE ONLY. FOR EROSION CONTROL DETAILS NOT SHOWN SEE SHEET ECD-1.
4. FOR DIMENSION "L" AND "W", SEE SHEET DD-11 UNDER BIOSWALE DIMENSIONS.

Dist	COUNTY	ROUTE	KILOMETER POST TOTAL PROJECT	SHEET No.	TOTAL SHEETS
01	Men	101	R69.4/R78.9	343	939

Mitch Andrus 9-22-11
REGISTERED CIVIL ENGINEER DATE

1-23-12
PLANS APPROVAL DATE

REGISTERED PROFESSIONAL ENGINEER MITCH ANDRUS No. C48753 Exp. 9-30-12 CIVIL STATE OF CALIFORNIA

THE STATE OF CALIFORNIA OR ITS OFFICERS OR AGENTS SHALL NOT BE RESPONSIBLE FOR THE ACCURACY OR COMPLETENESS OF ELECTRONIC COPIES OF THIS PLAN SHEET.

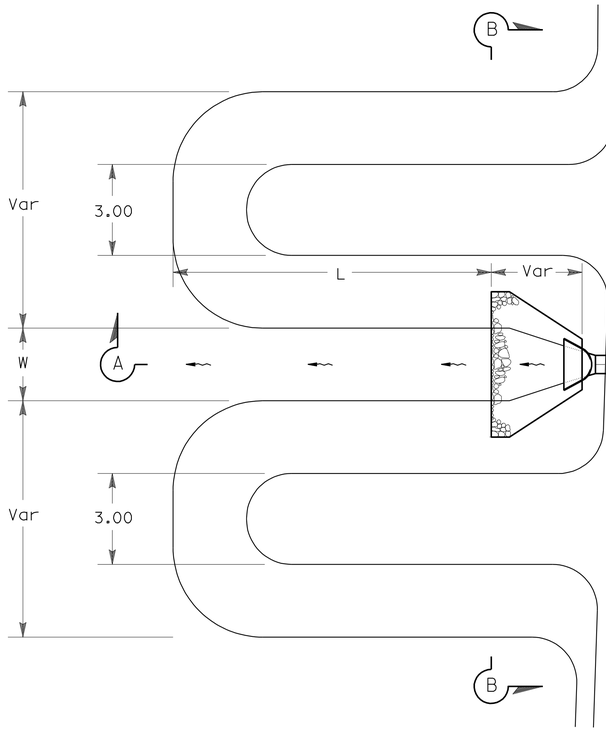

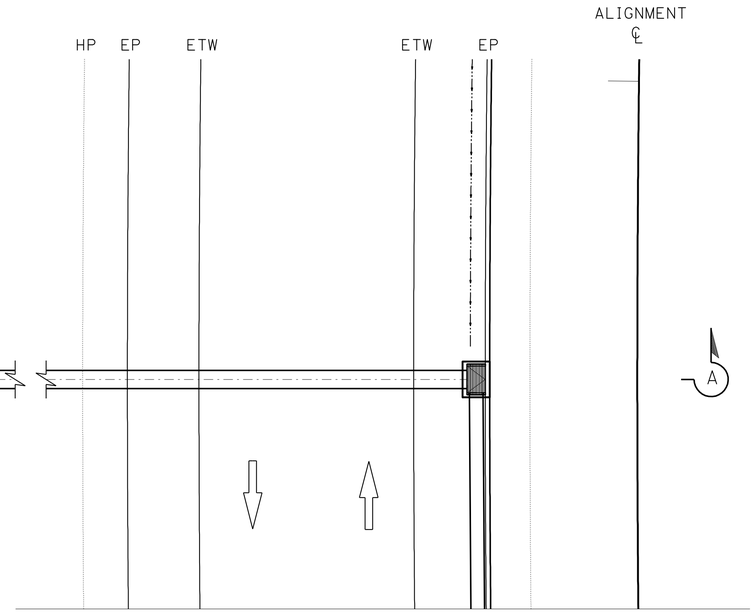

PLAN
ROCK SLOPE PROTECTION
FOR FLOW STRAIGHT OUT OF TRAPEZOIDAL SWALE

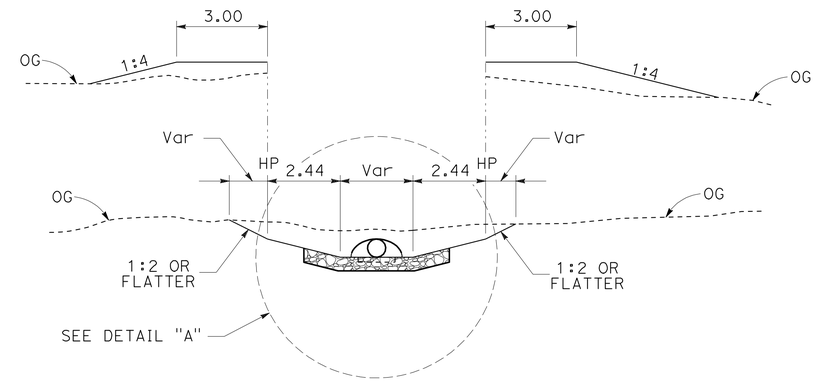

SECTION B-B

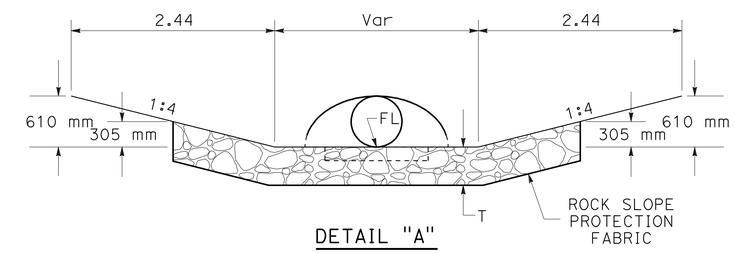

DETAIL "A"

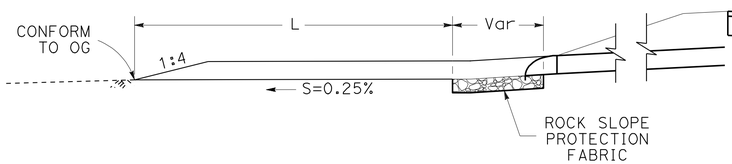

SECTION A-A

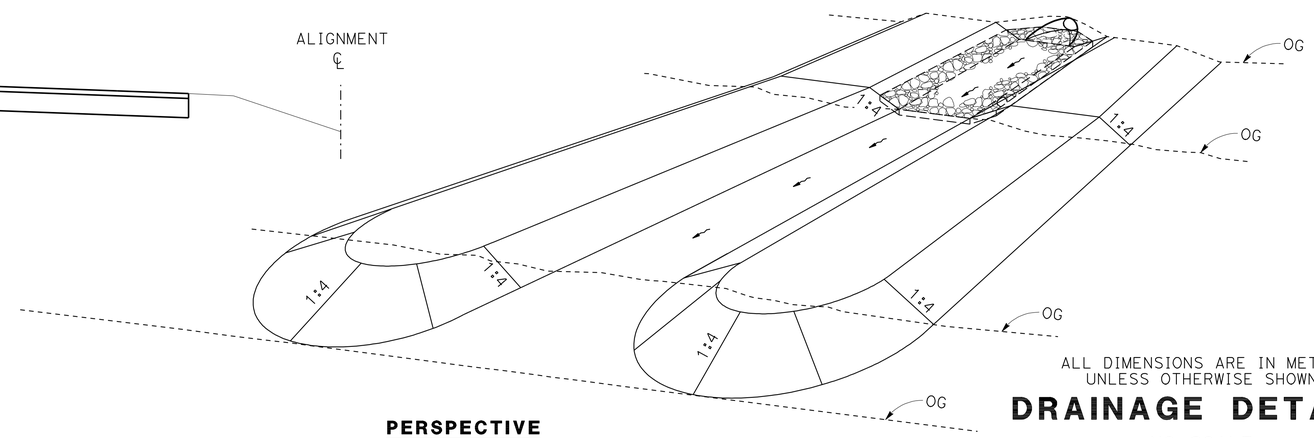

PERSPECTIVE
IN TRAPEZOIDAL SWALE

ALL DIMENSIONS ARE IN METERS UNLESS OTHERWISE SHOWN.

DRAINAGE DETAILS

NO SCALE

DD-10

MGA	05-30-11	KAO THAO	SCOTT FOSTER
REVISED BY	DATE REVISED	CALCULATED-DESIGNED BY	CHECKED BY

FUNCTIONAL SUPERVISOR: DOUGLAS S. JONES

STATE OF CALIFORNIA - DEPARTMENT OF TRANSPORTATION
Caltrans 03-DESIGN EAST

LAST REVISION 05-30-11
DATE PLOTTED => 28-JAN-2012
TIME PLOTTED => 07:00

Dist	COUNTY	ROUTE	KILOMETER POST TOTAL PROJECT	SHEET No.	TOTAL SHEETS
01	Men	101	R69.4/R78.9	344	939

Mitch Andrus 9-22-11
REGISTERED CIVIL ENGINEER DATE

1-23-12
PLANS APPROVAL DATE

REGISTERED PROFESSIONAL ENGINEER MITCH ANDRUS No. C48753 Exp. 9-30-12 CIVIL STATE OF CALIFORNIA

THE STATE OF CALIFORNIA OR ITS OFFICERS OR AGENTS SHALL NOT BE RESPONSIBLE FOR THE ACCURACY OR COMPLETENESS OF ELECTRONIC COPIES OF THIS PLAN SHEET.

Caltrans Metric

DRAINAGE SYSTEM No.	PLAN SHEET No.	PROFILE SHEET No.	DRAINAGE UNIT	STATION	RSP DIMENSIONS DEPTH m	RSP DIMENSIONS AREA m²	RSP DIMENSIONS VOLUME m³	BIOSWALE DIMENSIONS LENGTH (L) m	BIOSWALE DIMENSIONS WIDTH (W) m	BIOSWALE DIMENSIONS AREA m²
1	D-1	DP-1	d	"A" 96+65.876	0.46	7.87	3.6	7.64	2.74	30.5
2	D-2	DP-1	d	"A" 98+49.578	0.46	51.73	23.7	8.00	2.74	34.1
3	D-2	DP-1	b	"A" 98+63.487	0.46	14.18	6.5	7.11	2.74	30.3
			c		0.46	13.85	6.3	-	-	-
5	D-3	DP-2	d	"U2" 101+57.578	0.46	8.92	4.1	7.62	2.74	34.8
			e		0.46	32.74	15.0	-	-	-
6	D-3	DP-2	c	"U1" 100+86.210	0.46	4.87	2.2	8.67	2.44	37.0
			e		SEE DP-2 FOR DETAILS			-	-	-
10	D-4	DP-4	c	"H" 97+61.705	0.46	6.58	3.0	9.14	2.74	41.8
23	D-5	DP-11	d	"H" 100+72.500	SEE DP-11 FOR DETAILS			10.13	2.44	47.9
30	D-6	DP-14	c	"U4" 109+07.777	SEE DP-14 FOR DETAILS			7.62	2.44	25.8
31	D-6	DP-15	c	"U3" 108+75.000	SEE DP-15 FOR DETAILS			7.62	2.44	38.3
32	D-6	DP-15	c	"U3" 109+46.389	SEE DP-15 FOR DETAILS			6.10	2.44	22.3
33	D-7	DP-16	d	"A" 110+50.000	SEE DP-16 FOR DETAILS			7.62	2.44	27.8
34	D-7	DP-16	c	"A" 110+71.840	0.61	182.64	74.5	-	-	-
36	D-7	DP-17	d	"AS" 41+30.000	0.46	12.38	5.7	10.67	2.44	52.0
37	D-8	DP-18	g	"AS" 42+46.680	0.76	182.64	139.2	-	-	-
38	D-8	DP-19	e	"AN" 33+70.000	0.46	17.85	8.2	10.67	2.44	52.0
41	D-9	DP-21	d	"AS" 46+05.552	SEE DP-21 FOR DETAILS			10.67	2.44	52.0
42	D-11	DP-22	e	"A" 125+30.000	SEE DP-22 FOR DETAILS			7.62	2.44	27.9
44	D-12	DP-24	d	"A" 128+70.000	SEE DP-24 FOR DETAILS			12.19	2.44	59.3
46	D-14	DP-26	e	"A" 133+90.000	0.46	24.60	11.2	6.10	2.44	29.7
47	D-14	DP-26	e	"A" 135+05.000	0.46	29.87	13.7	7.62	2.44	37.2
49	D-17	DP-28	c	"A" 145+95.000	SEE DP-28 FOR DETAILS			7.62	2.44	37.2
50	D-18	DP-29	l	"A" 147+15.000	SEE DP-29 FOR DETAILS			12.19	3.05	66.9
54	D-23	DP-32	f	"W" 168+05.000	0.46	27.81	12.7	10.67	2.44	52.0
56	D-24	DP-33	d	"W" 170+10.000	0.46	34.23	15.6	13.33	2.44	62.1
59	D-25	DP-36	e	"NW1" 173+62.500	0.46	39.63	18.1	13.12	2.44	59.9
62	D-26	DP-39	e	"D" 20+27.898	0.46	12.20	5.6	9.14	2.44	44.6
DB-8	D-27	DD-43	b	"QM1" 176+81.841	SEE DD-43 FOR DETAILS			53.0	6.10	452.5
70	D-27	DP-44	d	"RA5" 50+43.500	0.46	8.74	4.0	6.10	2.44	29.7
76	D-28	DP-50	bb	"B" 10+50.000	0.46	10.21	4.7	20.94	2.44	102.1
78	D-28	DP-51	g	"QM4" 178+78.014	0.46	8.73	4.0	9.14	2.44	44.6
81	D-29	DP-53	d	"NW2" 180+30.081	0.61	9.85	6.0	10.86	2.44	53.0

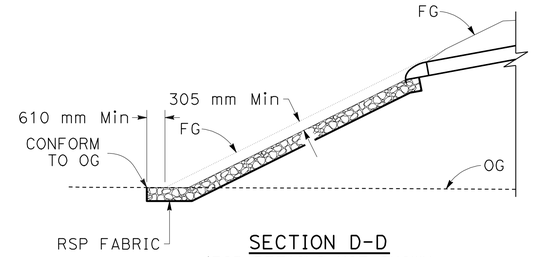

SECTION D-D
(FOR DETAILS NOT SHOWN SEE DRAINAGE PROFILE)

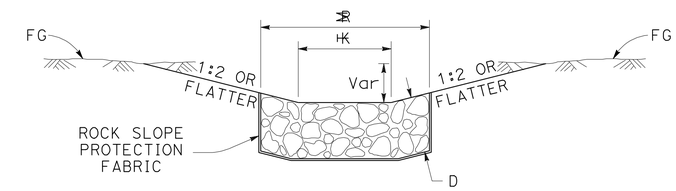

HK 762 mm FOR 450 mm PIPE
914 mm FOR 600 mm PIPE
1220 mm FOR 900 mm PIPE

HR 1372 mm FOR 450 mm PIPE
1829 mm FOR 600 mm PIPE
2734 mm FOR 900 mm PIPE

SECTION A-A

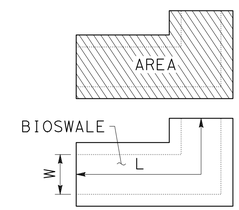

PLAN

BIOSWALE DETAIL
(FOR DETAILS NOT SHOWN SEE ECD-1 AND ECD-2)

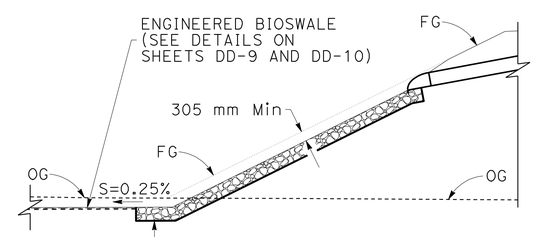

SECTION B-B
(FOR DETAILS NOT SHOWN SEE DRAINAGE PROFILE)

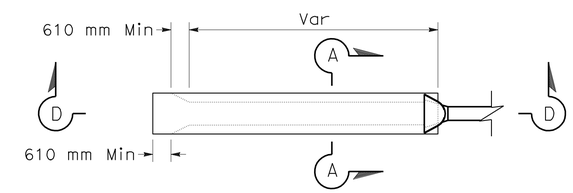

PLAN

DRAINAGE SYSTEM NO.

7-f, 13-h, 14-h, 17-h, 18-h,
22-l, 23-d, 24-e, 26-p, 31-c,
32-c, 33-d, 38-e, 40-b, 41-d,
42-e, 44-d, 49-c, 50-l, 67-d,
68-e, 74-e, 76-f-q, 78-f,
79-f, 80-e, 82-d, 83-d

RSP DETAILS DOWN FILL
(FOR DETAILS NOT SHOWN SEE DD-1 AND DD-2)

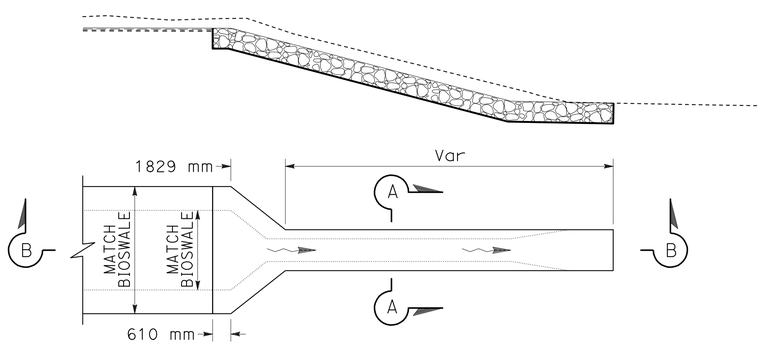

PLAN

DRAINAGE SYSTEM NO.

36-d, 38-e, 46-e, 47-e, 54-f, 56-d,
59-e, 72-d, 76-bb, 78-g, 81-d

RSP DETAILS DOWN EXISTING DRAINAGE DISCHARGING FROM A BIOSWALE
(FOR DETAILS NOT SHOWN SEE DRAINAGE PROFILE)

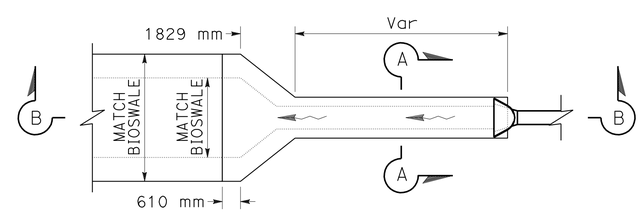

PLAN

DRAINAGE SYSTEM NO.

36-d, 38-e, 46-e, 47-e, 54-f, 56-d,
59-e, 72-d, 76-bb, 78-g, 81-d

RSP DETAILS DOWN FILL DISCHARGING TO A BIOSWALE
(FOR DETAILS NOT SHOWN SEE DD-1 AND DD-2)

ALL DIMENSIONS ARE IN METERS UNLESS OTHERWISE SHOWN.

DRAINAGE DETAILS

NO SCALE

DD-11

STATE OF CALIFORNIA - DEPARTMENT OF TRANSPORTATION
Caltrans 03-DESIGN EAST

FUNCTIONAL SUPERVISOR: DOUGLAS S. JONES
CALCULATED-DESIGNED BY: SCOTT FOSTER
CHECKED BY: KAO THAO
REVISED BY: MGA
DATE REVISED: 05-30-11

LAST REVISION 05-30-11
DATE PLOTTED => 28-JAN-2012
TIME PLOTTED => 07:00

Dist	COUNTY	ROUTE	KILOMETER POST TOTAL PROJECT	SHEET No.	TOTAL SHEETS
01	Men	101	R69.4/R78.9	345	939

Mitch Andrus 9-22-11
REGISTERED CIVIL ENGINEER DATE

1-23-12
PLANS APPROVAL DATE

REGISTERED PROFESSIONAL ENGINEER MITCH ANDRUS No. C48753 Exp. 9-30-12 CIVIL STATE OF CALIFORNIA

THE STATE OF CALIFORNIA OR ITS OFFICERS OR AGENTS SHALL NOT BE RESPONSIBLE FOR THE ACCURACY OR COMPLETENESS OF ELECTRONIC COPIES OF THIS PLAN SHEET.

Caltrans Metric

SETTLEMENT BASIN TABLE

DRAINAGE SYSTEM No.	PLAN SHEET No.	FOR MORE INFO SEE	POINT A STATION	POINT A OFFSET m		POINT B STATION	POINT B OFFSET m		BASIN DIMENSIONS WIDTH m	LENGTH m	Elev m
15	D-5	DP-7	"H" 99+21.952	20.31	R+	"H" 99+28.048	20.31	R+	3.05	6.10	448.90
23	D-5	DP-11	"H" 100+74.160	23.30	R+	"H" 100+78.499	21.07	R+	3.05	4.88	446.10
27	D-6	DD-14	"H" 98+83.614	78.39	L+	"H" 98+89.665	77.65	L+	3.05	6.10	444.90
31	D-6	DP-15	"U3" 108+73.937	23.77	L+	"U3" 108+79.008	23.77	L+	2.44	4.69	444.40
32	D-6	DP-15	"U3" 109+44.988	17.00	L+	"U3" 109+54.988	16.71	L+	2.44	10.00	445.37
33	D-7	DP-16	"A" 110+48.782	34.29	L+	"A" 110+53.964	34.29	L+	2.44	5.18	443.25
41	D-9	DP-21	"AS" 46+04.345	22.51	L+	"AS" 46+16.124	22.63	L+	2.44	11.92	431.72
42	D-11	DP-22	"A" 125+27.500	35.44	L+	"A" 125+32.500	35.44	L+	2.44	5.00	424.00
44	D-12	DP-24	"A" 128+68.240	39.12	L+	"A" 128+75.907	38.30	L+	2.44	7.38	422.12
49	D-17	DP-28	"A" 145+91.324	30.16	L+	"A" 100+97.430	30.16	L+	2.44	6.10	413.25
50	D-17	DP-29	"A" 147+11.950	34.59	L+	"A" 147+18.046	34.59	L+	3.05	6.10	413.00

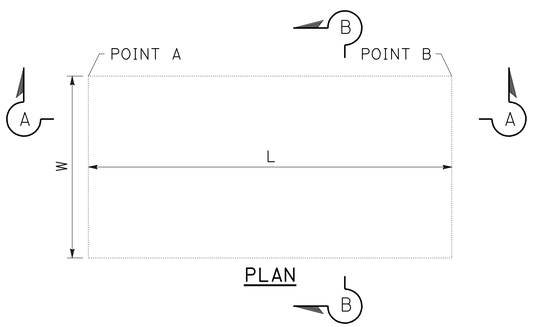

PLAN

SETTLEMENT BASIN DETAIL

(USE MEASUREMENTS AND ELEVATIONS SHOWN UNLESS OTHERWISE DIRECTED BY ENGINEER)

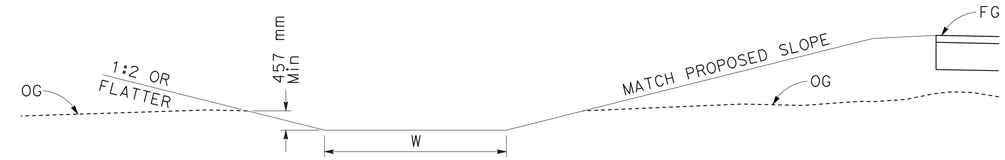

SECTION B-B

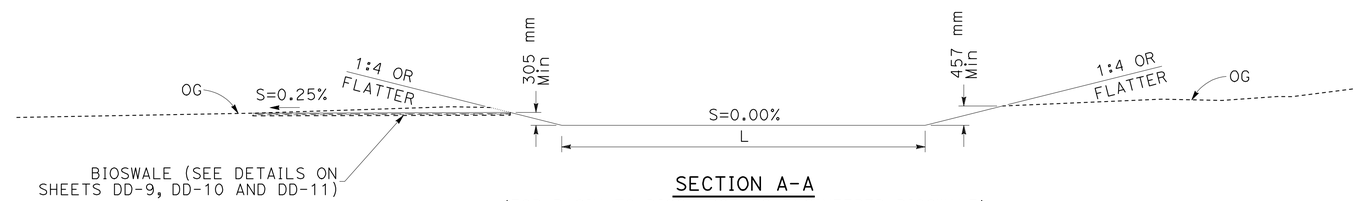

SECTION A-A

(FOR BASIN TO DISCHARGE TO ENGINEERED BIOSWALE)

DRAINAGE SYSTEM NO.

23, 27, 31, 32, 33, 41, 42, 44, 49, 50

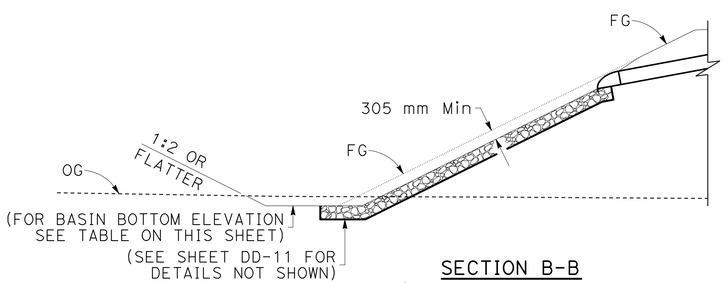

SECTION B-B

(FOR DRAINAGE SYSTEM DISCHARGE TO BASIN)

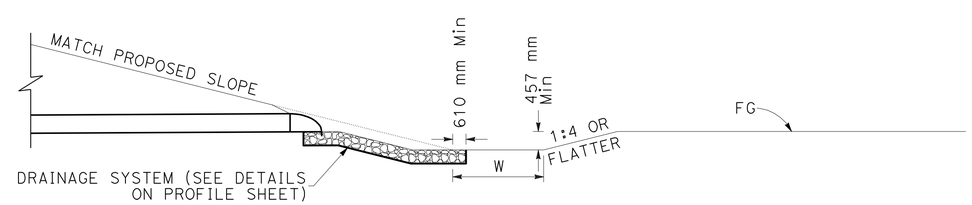

SECTION B-B

(FOR BASIN TO DISCHARGE TO DRAINAGE SYSTEM)

DRAINAGE SYSTEM NO.

15

ALL DIMENSIONS ARE IN METERS UNLESS OTHERWISE SHOWN.

DRAINAGE DETAILS

NO SCALE

DD-12

STATE OF CALIFORNIA - DEPARTMENT OF TRANSPORTATION
Caltrans 03-DESIGN EAST

FUNCTIONAL SUPERVISOR: DOUGLAS S. JONES
CALCULATED-DESIGNED BY: SCOTT FOSTER
CHECKED BY: KAO THAO
REVISED BY: MGA
DATE REVISED: 05-30-11

LAST REVISION 05-30-11
DATE PLOTTED => 28-JAN-2012
TIME PLOTTED => 07:00

Dist	COUNTY	ROUTE	KILOMETER POST TOTAL PROJECT	SHEET No.	TOTAL SHEETS
01	Men	101	R69.4/R78.9	346	939

Caltrans Metric

Mitch Andrus 9-22-11
REGISTERED CIVIL ENGINEER DATE

1-23-12
PLANS APPROVAL DATE

REGISTERED PROFESSIONAL ENGINEER MITCH ANDRUS No. C48753 Exp. 9-30-12 CIVIL STATE OF CALIFORNIA

THE STATE OF CALIFORNIA OR ITS OFFICERS OR AGENTS SHALL NOT BE RESPONSIBLE FOR THE ACCURACY OR COMPLETENESS OF ELECTRONIC COPIES OF THIS PLAN SHEET.

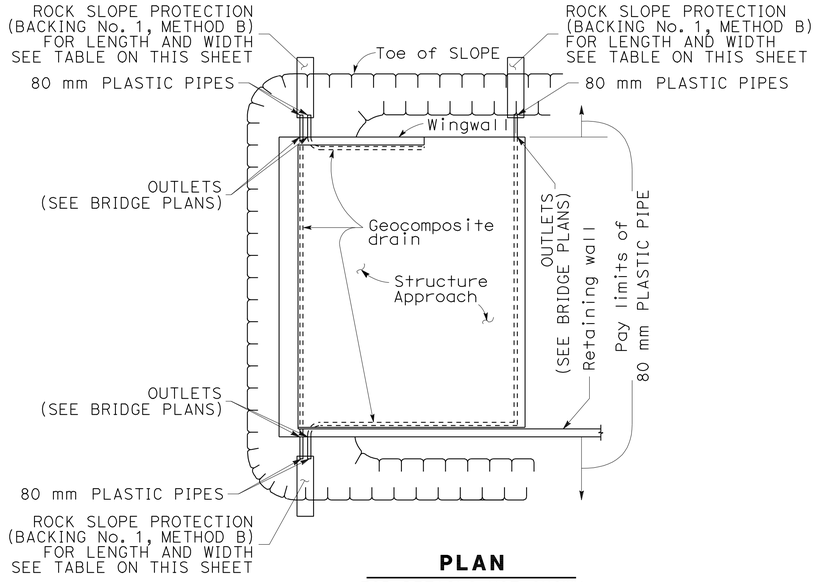

PLAN

FOR DETAILS NOT SHOWN (SEE BRIDGE PLAN)

BRIDGE ABUTMENT DRAINAGE					
BRIDGE No.	ABUT	80 mm PLASTIC PIPE	RSP DIMENSIONS		
			LENGTH	WIDTH	VOLUME
		m	m	m	m^3
10-0128R	1	30.0	25.0	0.61	15.3
	2	30.0	25.0	0.61	15.3
10-0128L	1	30.0	25.0	0.61	15.3
	2	30.0	25.0	0.61	15.3
10-0129R	1	30.0	10.0	0.61	6.1
	2	30.0	30.0	0.61	18.3
10-0129L	1	30.0	30.0	0.61	18.3
	2	30.0	30.0	0.61	18.3
10-0129F	1	30.0	20.0	0.61	12.2
	2	30.0	10.0	0.61	6.1
10-0129G	1	30.0	20.0	0.61	12.2
	2	30.0	15.0	0.61	9.2
10-0157	1	30.0	10.0	0.61	6.1
	2	30.0	10.0	0.61	6.1
10-0159	1	30.0	30.0	0.61	18.3
	2	30.0	30.0	0.61	18.3
10-0165	1	30.0	10.0	0.61	6.1
	34	30.0	10.0	0.61	6.1
10-0171	1	30.0	10.0	0.61	6.1
	2	30.0	10.0	0.61	6.1
10-0173	1	30.0	10.0	0.61	6.1
	2	30.0	10.0	0.61	6.1
10-0174	1	30.0	10.0	0.61	6.1
	2	30.0	10.0	0.61	6.1
10-174K	1	30.0	10.0	0.61	6.1
	2	30.0	10.0	0.61	6.1
10-0174S	1	30.0	10.0	0.61	6.1
	2	30.0	10.0	0.61	6.1
10-0305	1	30.0	10.0	0.61	6.1
	2	30.0	10.0	0.61	6.1

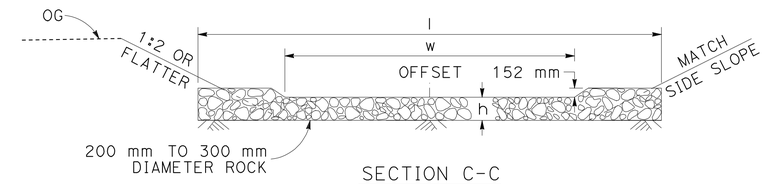

SECTION C-C

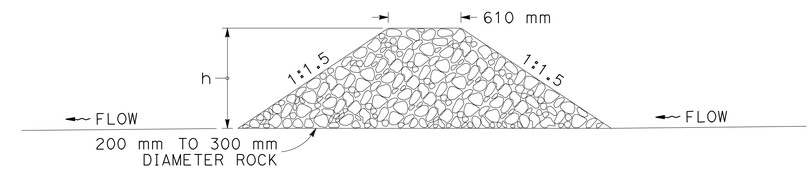

SECTION B-B

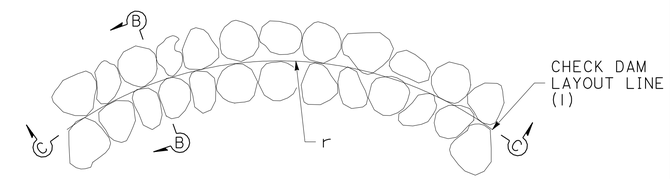

PLAN

CHECK DAM DESIGN

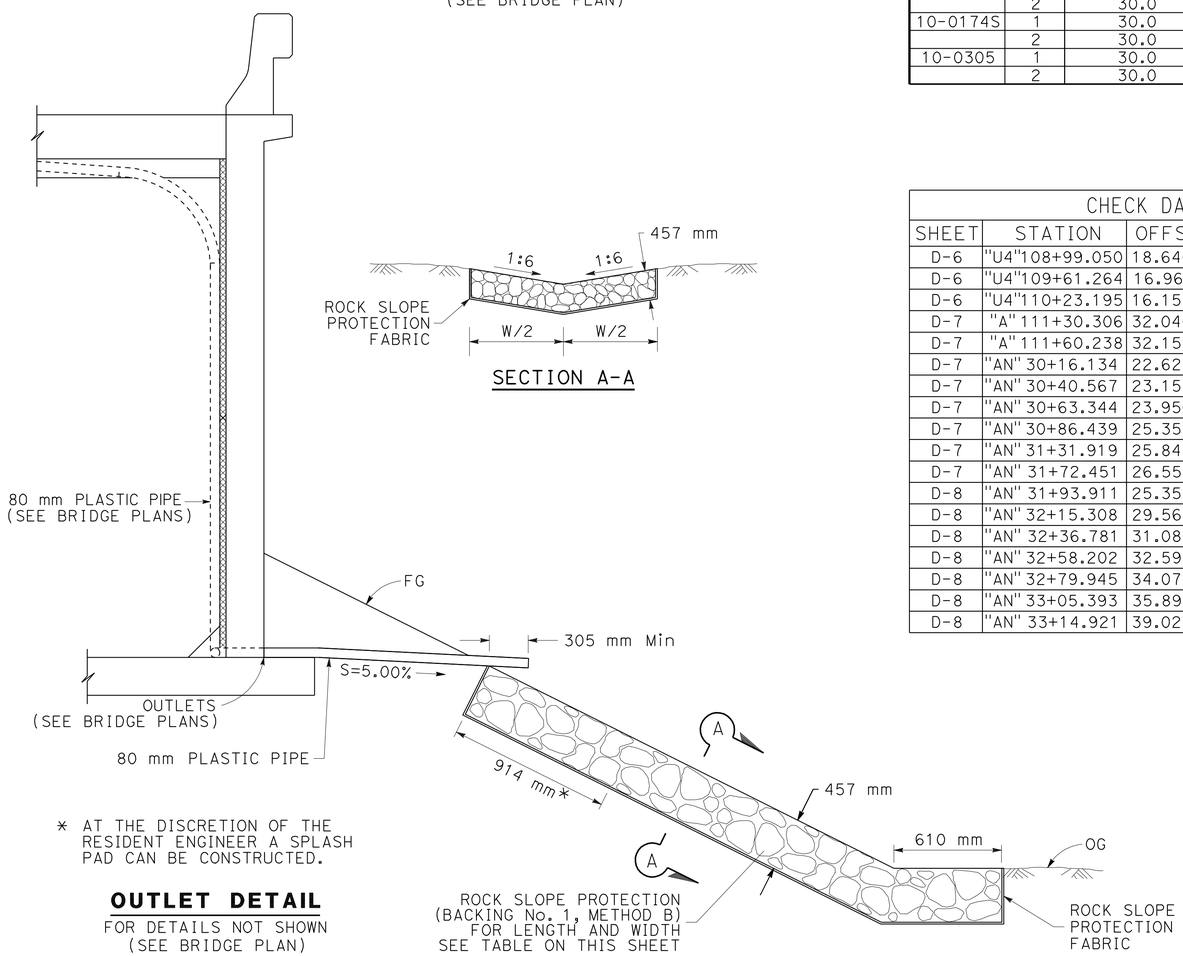

SECTION A-A

* AT THE DISCRETION OF THE RESIDENT ENGINEER A SPLASH PAD CAN BE CONSTRUCTED.

OUTLET DETAIL

FOR DETAILS NOT SHOWN (SEE BRIDGE PLAN)

CHECK DAM DETAIL TABLE						
SHEET	STATION	OFFSET	h	r	w	l
D-6	"U4"108+99.050	18.640 R+	0.610	6.096	6.858	10.973
D-6	"U4"109+61.264	16.961 R+	0.610	6.096	6.858	10.973
D-6	"U4"110+23.195	16.155 R+	0.610	6.096	6.858	10.973
D-7	"A" 111+30.306	32.040 R+	0.610	7.620	7.620	12.192
D-7	"A" 111+60.238	32.156 R+	0.610	7.620	7.620	12.192
D-7	"AN" 30+16.134	22.626 R+	0.610	7.620	7.620	12.192
D-7	"AN" 30+40.567	23.153 R+	0.610	7.620	7.620	12.192
D-7	"AN" 30+63.344	23.950 R+	0.610	7.620	7.620	12.192
D-7	"AN" 30+86.439	25.356 R+	0.610	7.620	7.620	12.192
D-7	"AN" 31+31.919	25.843 R+	0.610	7.620	7.620	12.192
D-7	"AN" 31+72.451	26.554 R+	0.610	7.620	7.620	12.192
D-8	"AN" 31+93.911	25.356 R+	0.610	7.620	7.620	12.192
D-8	"AN" 32+15.308	29.564 R+	0.610	7.620	7.620	12.192
D-8	"AN" 32+36.781	31.086 R+	0.610	7.620	7.620	12.192
D-8	"AN" 32+58.202	32.592 R+	0.610	7.620	7.620	12.192
D-8	"AN" 32+79.945	34.073 R+	0.762	7.620	7.620	12.192
D-8	"AN" 33+05.393	35.894 R+	0.762	7.620	7.620	12.192
D-8	"AN" 33+14.921	39.029 R+	0.762	7.620	7.620	12.192

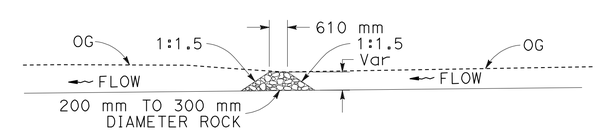

CHECK DAM DETAIL

ALL DIMENSIONS ARE IN METERS UNLESS OTHERWISE SHOWN.

DRAINAGE DETAILS

NO SCALE

DD-13

REVISED BY	MGA	DATE REVISED	05-30-11
CALCULATED-DESIGNED BY	SCOTT FOSTER		
CHECKED BY	KAO THAO		
FUNCTIONAL SUPERVISOR	DOUGLAS S. JONES		

STATE OF CALIFORNIA - DEPARTMENT OF TRANSPORTATION
Caltrans 03-DESIGN EAST

LAST REVISION 08-29-11
DATE PLOTTED => 28-JAN-2012
TIME PLOTTED => 07:00

Dist	COUNTY	ROUTE	KILOMETER POST TOTAL PROJECT	SHEET No.	TOTAL SHEETS
01	Men	101	R69.4/R78.9	347	939

Mitch Andrus 9-22-11
REGISTERED CIVIL ENGINEER DATE

1-23-12
PLANS APPROVAL DATE

REGISTERED PROFESSIONAL ENGINEER MITCH ANDRUS No. C48753 Exp. 9-30-12 CIVIL STATE OF CALIFORNIA

THE STATE OF CALIFORNIA OR ITS OFFICERS OR AGENTS SHALL NOT BE RESPONSIBLE FOR THE ACCURACY OR COMPLETENESS OF ELECTRONIC COPIES OF THIS PLAN SHEET.

Caltrans Metric

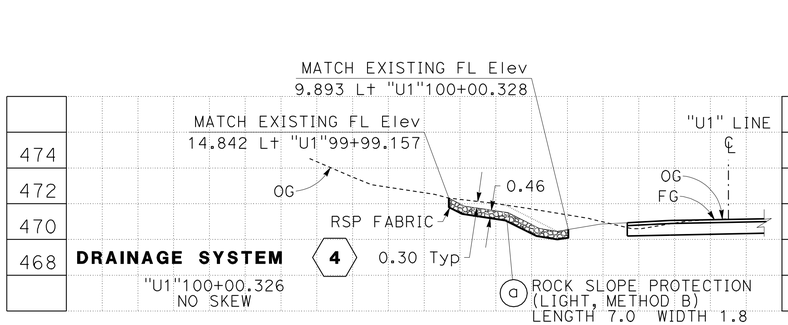

DRAINAGE SYSTEM 4

"U1"100+00.326
NO SKEW

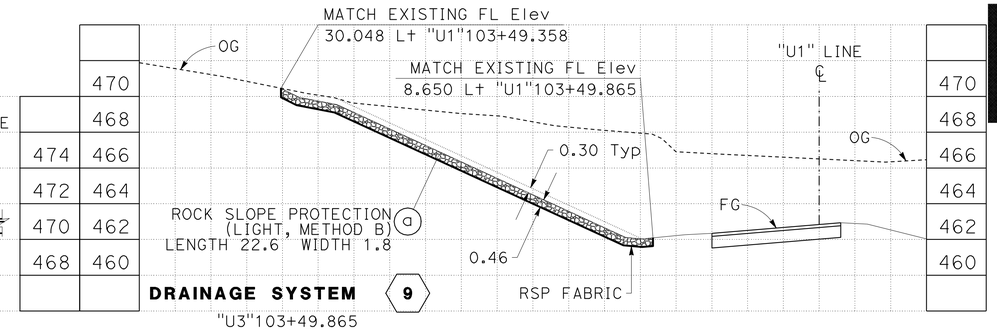

DRAINAGE SYSTEM 9

"U3"103+49.865
NO SKEW

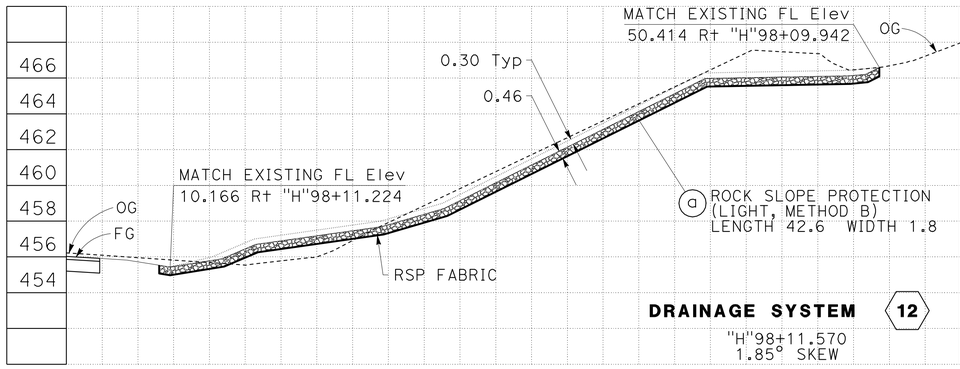

DRAINAGE SYSTEM 12

"H"98+11.570
1.85° SKEW

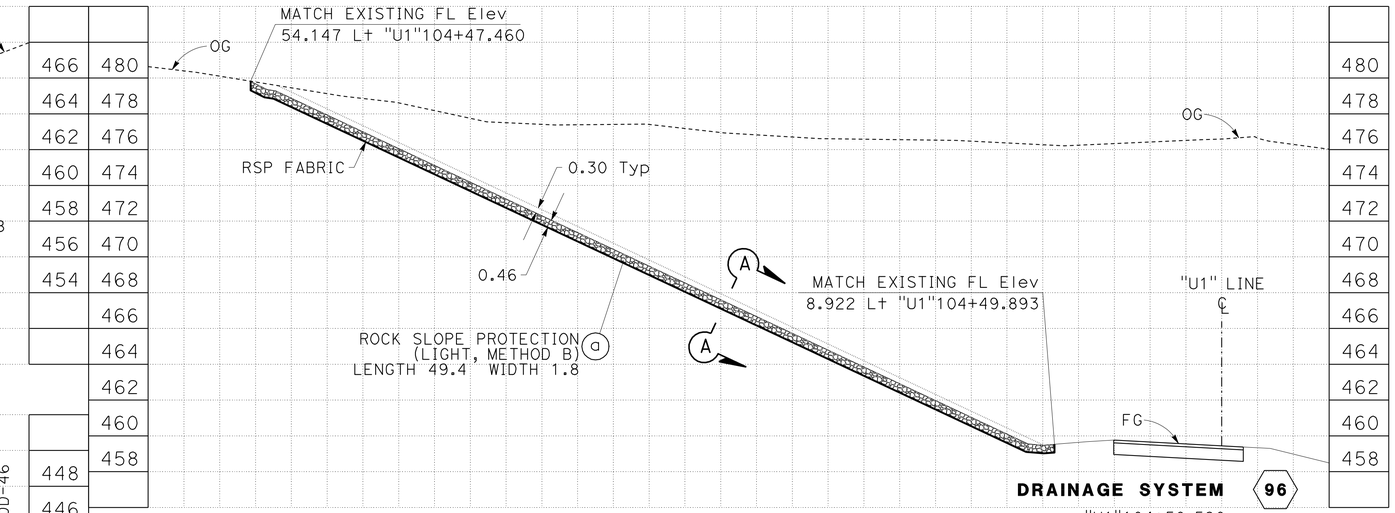

DRAINAGE SYSTEM 96

"U1"104+50.590
6.35° SKEW

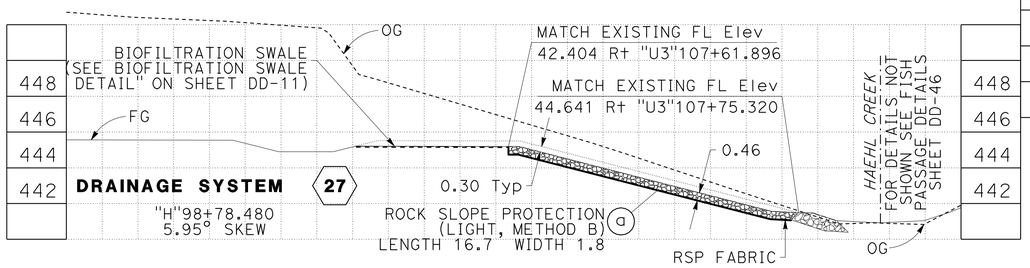

DRAINAGE SYSTEM 27

"H"98+78.480
5.95° SKEW

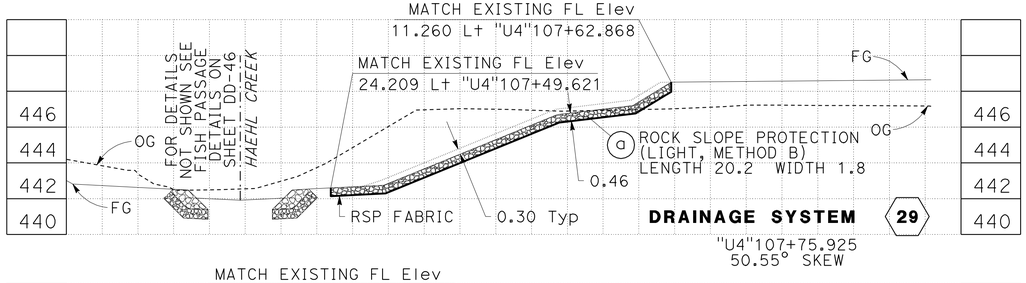

DRAINAGE SYSTEM 29

"U4"107+75.925
50.55° SKEW

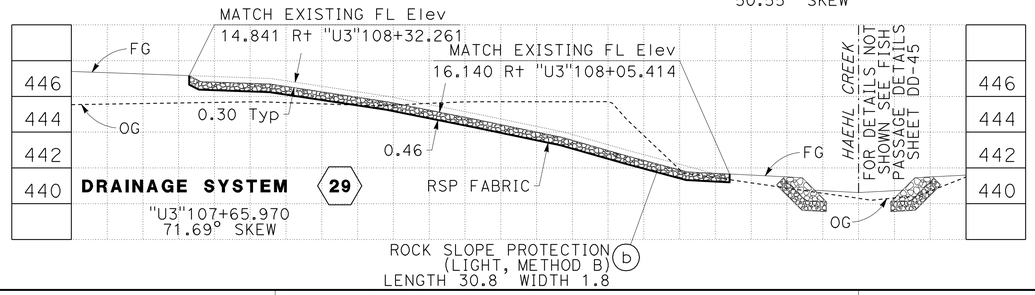

DRAINAGE SYSTEM 29

"U3"107+65.970
71.69° SKEW

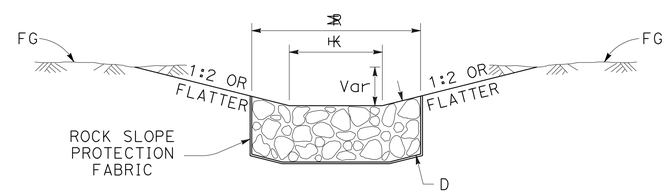

HK 914 m
HR 1829 mm

SECTION A-A
(TYPICAL DOWN SLOPES)

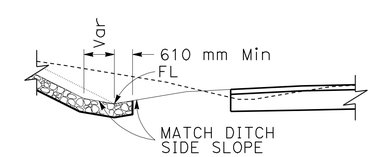

RSP WITH DITCH

DRAINAGE SYSTEM NO.

4, 9, 12, 27, 29, 96

ALL DIMENSIONS ARE IN METERS UNLESS OTHERWISE SHOWN.

DRAINAGE DETAILS

NO SCALE

DD-14

REVISED BY	DATE REVISED
MGA	05-30-11

CALCULATED-DESIGNED BY: KAO THAO
CHECKED BY: SCOTT FOSTER
FUNCTIONAL SUPERVISOR: DOUGLAS S. JONES

STATE OF CALIFORNIA - DEPARTMENT OF TRANSPORTATION
Caltrans 03-DESIGN EAST

LAST REVISION 05-31-11 | DATE PLOTTED => 28-JAN-2012 | TIME PLOTTED => 07:00

Dist	COUNTY	ROUTE	KILOMETER POST TOTAL PROJECT	SHEET No.	TOTAL SHEETS
01	Men	101	R69.4/R78.9	348	939

Mitch Andrus 9-22-11
REGISTERED CIVIL ENGINEER DATE

1-23-12
PLANS APPROVAL DATE

REGISTERED PROFESSIONAL ENGINEER MITCH ANDRUS No. C48753 Exp. 9-30-12 CIVIL STATE OF CALIFORNIA

THE STATE OF CALIFORNIA OR ITS OFFICERS OR AGENTS SHALL NOT BE RESPONSIBLE FOR THE ACCURACY OR COMPLETENESS OF ELECTRONIC COPIES OF THIS PLAN SHEET.

Caltrans Metric

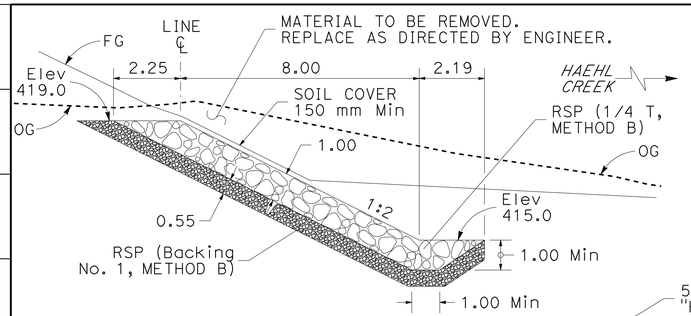

ROCK SLOPE PROTECTION
HAEHL CREEK
"HC1" 10+47.918 TO 10+73.268
"HC2" 10+10.000 TO 11+08.426

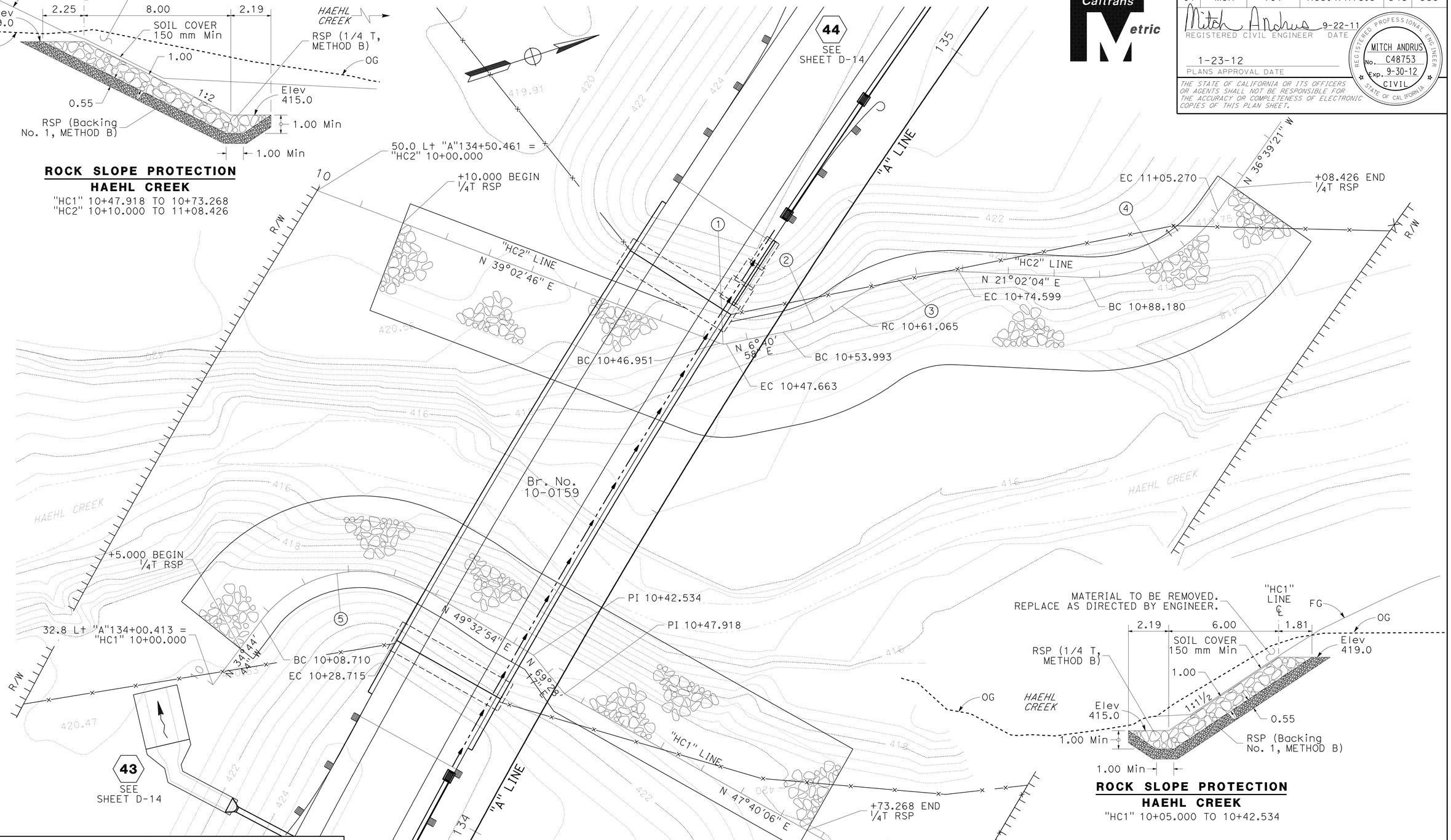

ROCK SLOPE PROTECTION
HAEHL CREEK
"HC1" 10+05.000 TO 10+42.534

CURVE DATA				
No.	R	Δ	T	L
1	1.261	32°21'47"	0.366	0.712
2	16.589	24°25'20"	3.590	7.071
3	20.000	38°46'26"	7.038	13.535
4	16.973	57°41'25"	9.348	17.090
5	13.598	80°17'38"	12.307	20.005

APPROVED FOR DRAINAGE WORK ONLY.

ALL DIMENSIONS ARE IN METERS UNLESS OTHERWISE SHOWN.

DRAINAGE DETAILS

NO SCALE

DD-15

REVISED BY	DATE REVISED
MGA	05-30-11

CALCULATED-DESIGNED BY: SCOTT FOSTER
CHECKED BY: KAO THAO
FUNCTIONAL SUPERVISOR: DOUGLAS S. JONES

STATE OF CALIFORNIA - DEPARTMENT OF TRANSPORTATION
Caltrans 03-DESIGN EAST

LAST REVISION 08-11-11 | DATE PLOTTED => 28-JAN-2012 | TIME PLOTTED => 07:01

Dist	COUNTY	ROUTE	KILOMETER POST TOTAL PROJECT	SHEET No.	TOTAL SHEETS
01	Men	101	R69.4/R78.9	349	939

Mitch Andrus 9-22-11
REGISTERED CIVIL ENGINEER DATE

1-23-12
PLANS APPROVAL DATE

REGISTERED PROFESSIONAL ENGINEER MITCH ANDRUS No. C48753 Exp. 9-30-12 CIVIL STATE OF CALIFORNIA

THE STATE OF CALIFORNIA OR ITS OFFICERS OR AGENTS SHALL NOT BE RESPONSIBLE FOR THE ACCURACY OR COMPLETENESS OF ELECTRONIC COPIES OF THIS PLAN SHEET.

Caltrans Metric

NOTE:

1. FOR CROSS SECTION DETAIL SEE SHEET DD-17.

RSP LIMIT TABLE

☐	STATION	OFFSET	Elev	☐	STATION	OFFSET	Elev
1	"W" 147+96.469	38.352 L+	413.000	11	"CV" 9+38.643	6.000 R+	412.000
2	"W" 147+96.469	52.379 L+	411.000	12	"CV" 9+36.650	6.904 R+	410.000
3	"W" 148+05.973	37.421 L+	413.000	13	"CV" 9+39.380	12.800 R+	410.000
4	"W" 148+05.973	52.093 L+	411.484	14	"CV" 9+49.151	14.263 R+	412.800
5	"W" 148+18.542	54.578 L+	411.421	15	"CV" 9+42.179	16.664 R+	410.000
6	"W" 148+20.000	56.548 L+	411.000	16	"CV" 9+51.582	18.000 L+	412.800
7	"W" 148+40.000	50.862 L+	411.313	17	"CV" 9+52.415	18.960 L+	412.800
8	"W" 148+40.000	56.788 L+	411.000	18	"CV" 9+46.731	22.949 R+	410.000
9	"CV" 9+36.066	17.689 R+	412.971	19	"CV" 9+53.854	21.364 R+	412.800
10	"CV" 9+36.110	11.359 R+	412.971	20	"CV" 9+48.830	24.942 R+	410.000

CURVE DATA

No. ⊕	R	Δ	T	L
1	10′	32°26′56"	2.91	5.66
2	70′	3°26′24"	2.10	4.20

DS No.	FOR MORE INFORMATION SEE SHEET		
⬡	D-	DD-	DP-
53	18	17	30

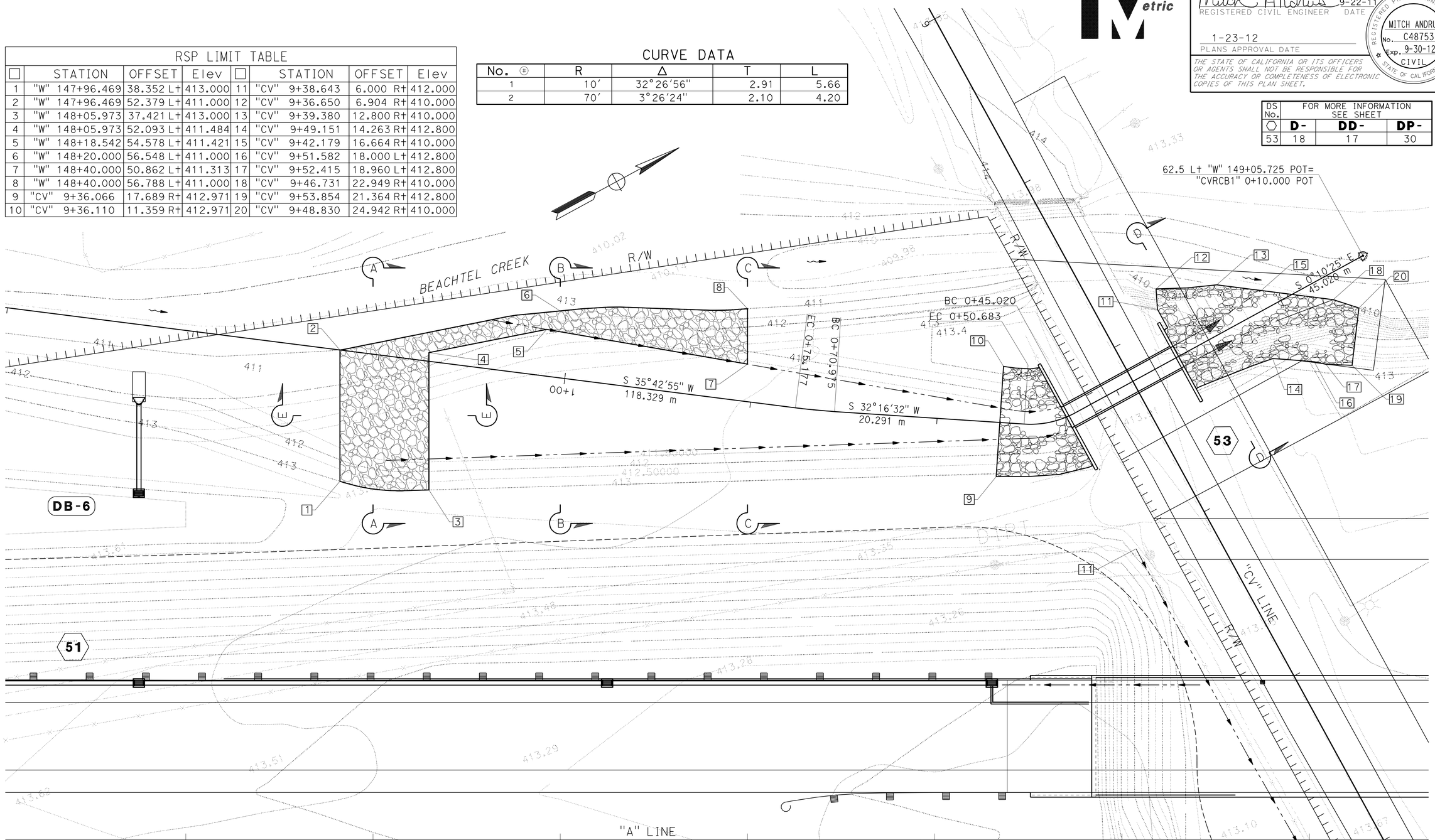

ALL DIMENSIONS ARE IN METERS UNLESS OTHERWISE SHOWN.

DRAINAGE DETAILS

NO SCALE

DD-16

APPROVED FOR DRAINAGE WORK ONLY

STATE OF CALIFORNIA - DEPARTMENT OF TRANSPORTATION
Caltrans 03-DESIGN EAST

FUNCTIONAL SUPERVISOR: DOUGLAS S. JONES
CALCULATED-DESIGNED BY: KAO THAO
CHECKED BY: SCOTT FOSTER
REVISED BY: MGA
DATE REVISED: 05-30-11

LAST REVISION 08-11-11
DATE PLOTTED => 31-JAN-2012
TIME PLOTTED => 13:04

Dist	COUNTY	ROUTE	KILOMETER POST TOTAL PROJECT	SHEET No.	TOTAL SHEETS
01	Men	101	R69.4/R78.9	350	939

Mitch Andrus 9-22-11
REGISTERED CIVIL ENGINEER DATE

1-23-12
PLANS APPROVAL DATE

REGISTERED PROFESSIONAL ENGINEER
MITCH ANDRUS
No. C48753
Exp. 9-30-12
CIVIL
STATE OF CALIFORNIA

THE STATE OF CALIFORNIA OR ITS OFFICERS OR AGENTS SHALL NOT BE RESPONSIBLE FOR THE ACCURACY OR COMPLETENESS OF ELECTRONIC COPIES OF THIS PLAN SHEET.

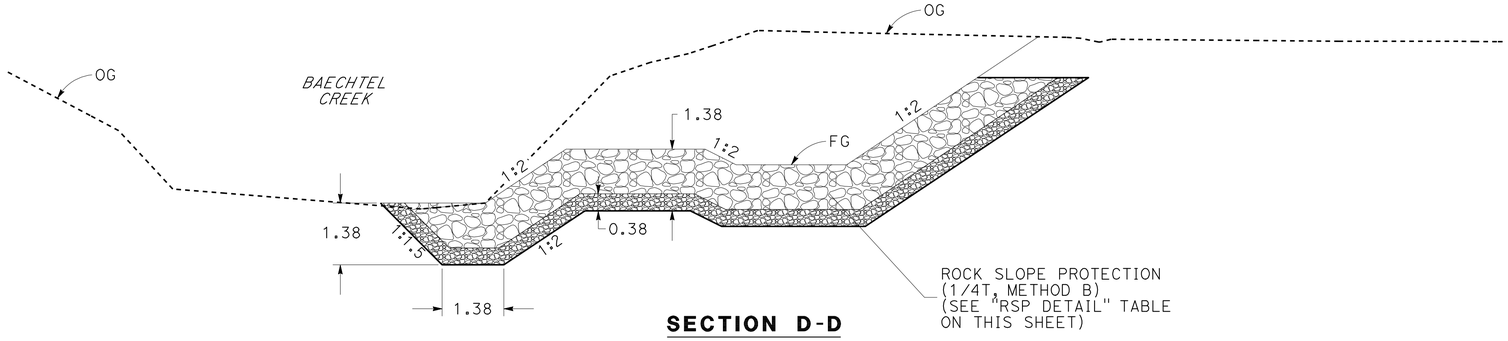

SECTION D-D

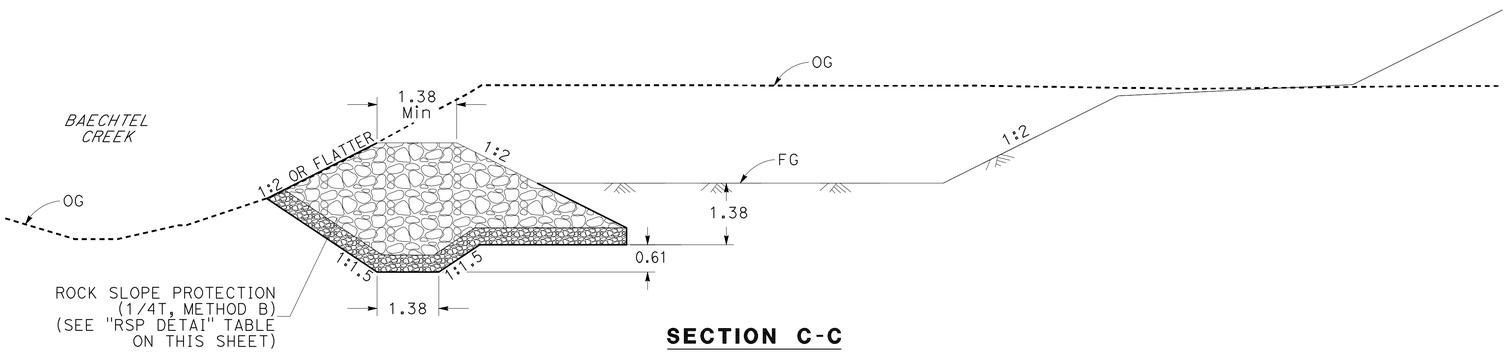

SECTION C-C

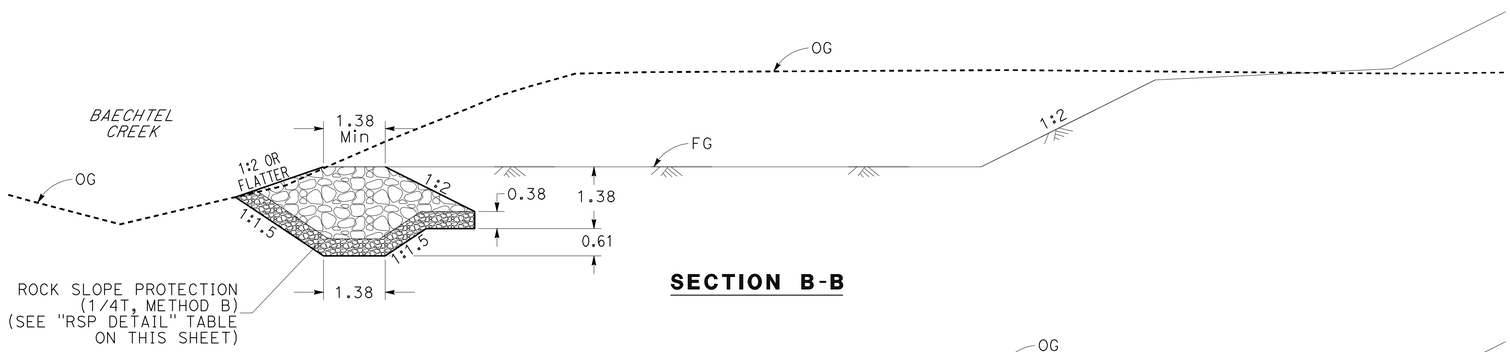

SECTION B-B

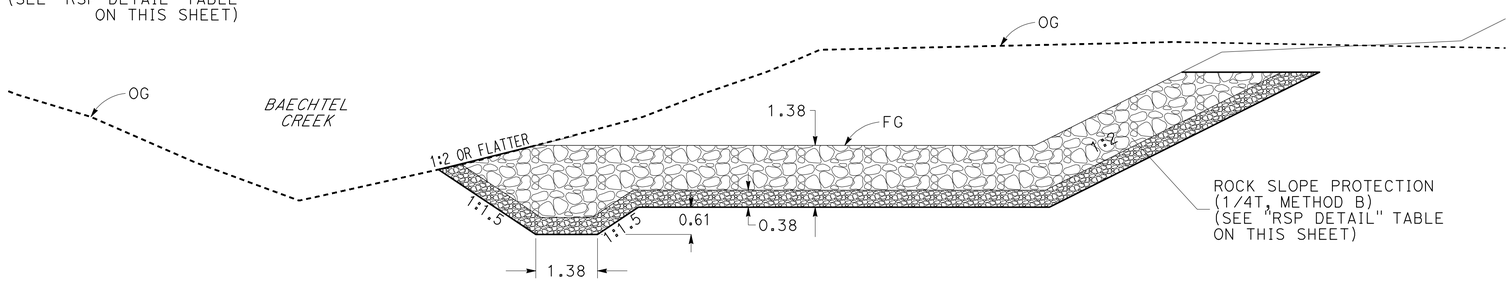

SECTION A-A

RSP DETAIL							
DRAINAGE SYSTEM No.	DRAINAGE UNIT	RSP (1/4T, METHOD B) DIMENSIONS			RSP (BACKING No. 1, METHOD B)DIMENSIONS		
		DEPTH	AREA	VOLUME	DEPTH	AREA	VOLUME
		m	m^2	m^3	m	m^2	m^3
53	c	1.00	99.47	19.03	0.38	99.47	19.03
	f	1.00	163.31	19.03	0.38	163.31	19.03
	h	1.00	262.91	19.03	0.38	262.91	19.03

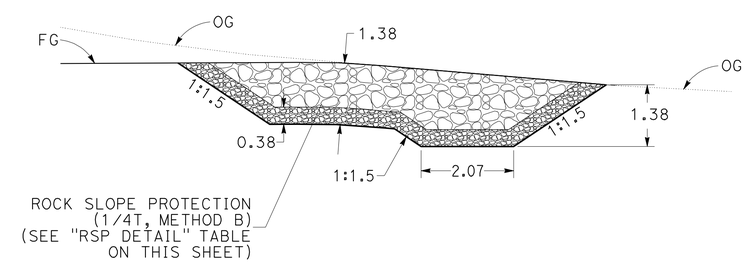

SECTION E-E

APPROVED FOR DRAINAGE WORK ONLY.

ALL DIMENSIONS ARE IN METERS UNLESS OTHERWISE SHOWN.

DRAINAGE DETAILS

NO SCALE

DD-17

REVISED BY	DATE REVISED
MGA	05-30-11

CALCULATED-DESIGNED BY: KAO THAO
CHECKED BY: SCOTT FOSTER
FUNCTIONAL SUPERVISOR: DOUGLAS S. JONES

STATE OF CALIFORNIA - DEPARTMENT OF TRANSPORTATION
Caltrans 03-DESIGN EAST

LAST REVISION 05-30-11
DATE PLOTTED => 28-JAN-2012
TIME PLOTTED => 07:01

Dist	COUNTY	ROUTE	KILOMETER POST TOTAL PROJECT	SHEET No.	TOTAL SHEETS
01	Men	101	R69.4/R78.9	351	939

Mitch Andrus 9-22-11
REGISTERED CIVIL ENGINEER DATE

1-23-12
PLANS APPROVAL DATE

REGISTERED PROFESSIONAL ENGINEER MITCH ANDRUS No. C48753 Exp. 9-30-12 CIVIL STATE OF CALIFORNIA

THE STATE OF CALIFORNIA OR ITS OFFICERS OR AGENTS SHALL NOT BE RESPONSIBLE FOR THE ACCURACY OR COMPLETENESS OF ELECTRONIC COPIES OF THIS PLAN SHEET.

Caltrans Metric

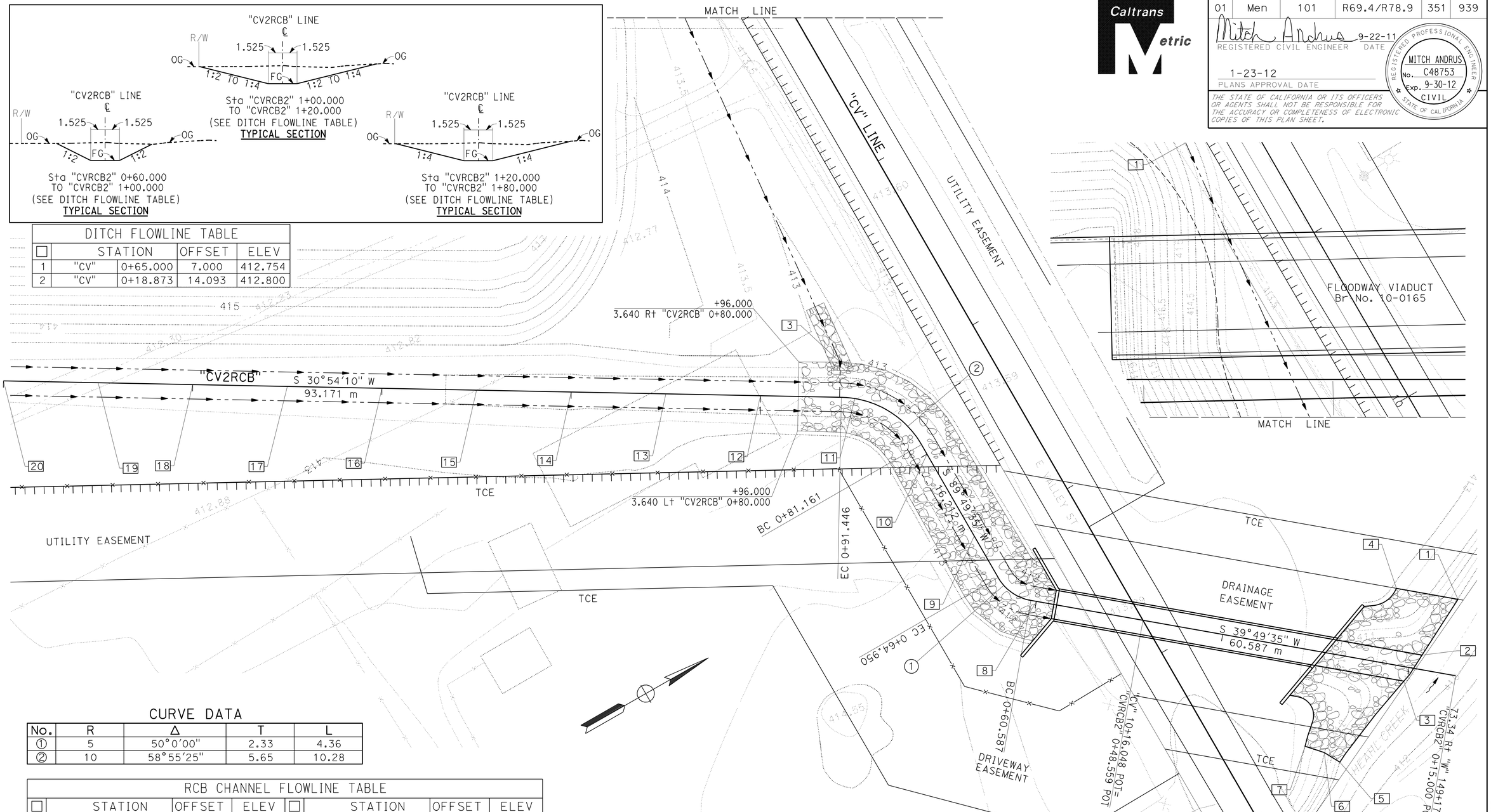

DITCH FLOWLINE TABLE				
☐	STATION		OFFSET	ELEV
1	"CV"	0+65.000	7.000	412.754
2	"CV"	0+18.873	14.093	412.800

CURVE DATA

No.	R	Δ	T	L
①	5	50°0'00"	2.33	4.36
②	10	58°55'25"	5.65	10.28

RCB CHANNEL FLOWLINE TABLE									
☐	STATION		OFFSET	ELEV	☐	STATION		OFFSET	ELEV
1	"CV2RCB"	0+16.170	8.000	410.000	11	"CV2RCB"	0+90.000	-	411.701
2	"CV2RCB"	0+18.873	1.525	410.000	12	"CV2RCB"	1+00.000	-	411.770
3	"CV2RCB"	0+20.280	1.525	410.000	13	"CV2RCB"	1+10.000	-	411.839
4	"CV2RCB"	0+22.778	8.000	412.800	14	"CV2RCB"	1+20.000	-	411.908
5	"CV2RCB"	0+25.461	11.132	410.000	15	"CV2RCB"	1+30.000	-	411.978
6	"CV2RCB"	0+27.264	10.420	412.000	16	"CV2RCB"	1+40.000	-	412.047
7	"CV2RCB"	0+29.363	10.124	413.000	17	"CV2RCB"	1+50.000	-	412.116
8	"CV2RCB"	0+60.000	-	411.494	18	"CV2RCB"	1+60.000	-	412.185
9	"CV2RCB"	0+70.000	-	411.563	19	"CV2RCB"	1+70.000	-	412.254
10	"CV2RCB"	0+80.000	-	411.632	20	"CV2RCB"	1+80.000	-	412.323

ALL DIMENSIONS ARE IN METERS UNLESS OTHERWISE SHOWN.

DRAINAGE DETAILS

NO SCALE

DD-18

APPROVED FOR DRAINAGE WORK ONLY

STATE OF CALIFORNIA - DEPARTMENT OF TRANSPORTATION
Caltrans 03-DESIGN EAST

FUNCTIONAL SUPERVISOR: DOUGLAS S. JONES
CALCULATED-DESIGNED BY: KAO THAO
CHECKED BY: SCOTT FOSTER
REVISED BY: MGA
DATE REVISED: 05-30-11

LAST REVISION 05-30-11
DATE PLOTTED => 31-JAN-2012
TIME PLOTTED => 13:05

Dist	COUNTY	ROUTE	KILOMETER POST TOTAL PROJECT	SHEET No.	TOTAL SHEETS
01	Men	101	R69.4/R78.9	352	939

Mitch Andrus 9-22-11
REGISTERED CIVIL ENGINEER DATE

1-23-12
PLANS APPROVAL DATE

REGISTERED PROFESSIONAL ENGINEER MITCH ANDRUS No. C48753 Exp. 9-30-12 CIVIL STATE OF CALIFORNIA

THE STATE OF CALIFORNIA OR ITS OFFICERS OR AGENTS SHALL NOT BE RESPONSIBLE FOR THE ACCURACY OR COMPLETENESS OF ELECTRONIC COPIES OF THIS PLAN SHEET.

Caltrans Metric

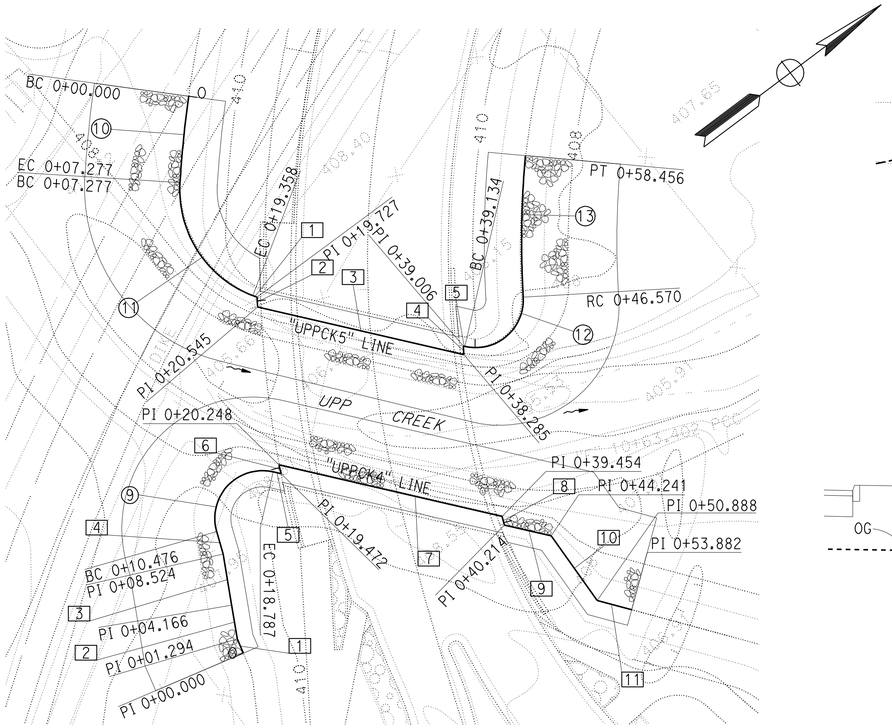

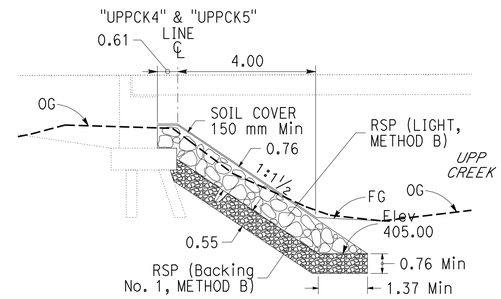

ROCK SLOPE PROTECTION
UPP CREEK
"UPPCK4" 0+20.248 TO 0+39.454
"UPPCK5" 0+20.545 TO 0+38.285

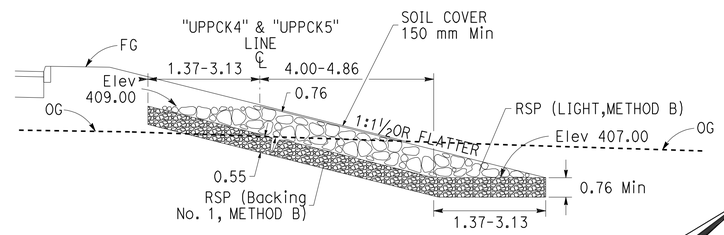

ROCK SLOPE PROTECTION
UPP CREEK
"UPPCK4" 0+00.000 TO 0+20.248
"UPPCK4" 0+39.454 TO 0+53.882
"UPPCK5" 0+00.000 TO 0+20.545
"UPPCK5" 0+38.285 TO 0+58.456

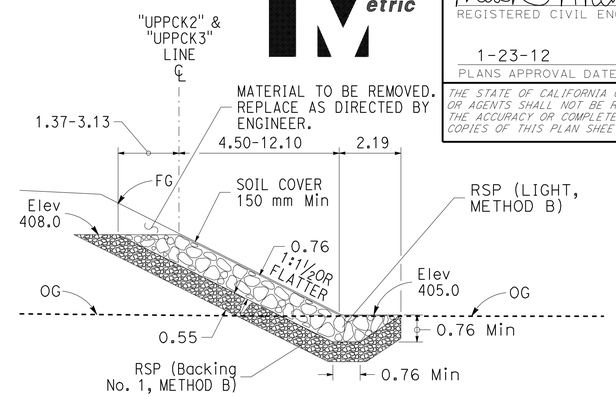

ROCK SLOPE PROTECTION
UPP CREEK
"UPPCK2" 0+00.000 TO 0+13.312
"UPPCK2" 1+43.061 TO 1+55.691
"UPPCK3" 0+00.000 TO 0+17.031
"UPPCK3" 1+28.757 TO 1+45.083

TANGENT DATA ("UPPCK5" LINE)		
No.	L	BEARING
1	0.369	57°37'08"
2	0.818	57°02'51"
3	17.740	49°51'00"
4	0.722	57°02'47"
5	0.128	50°00'38"

TANGENT DATA ("UPPCK4" LINE)		
No.	L	BEARING
1	1.294	76°19'46"
2	2.872	62°38'43"
3	4.358	62°38'51"
4	1.952	69°11'52"
5	0.685	49°50'47"
6	0.776	67°18'12"
7	19.206	49°50'59"
8	0.760	67°18'06"
9	4.027	49°51'02"
10	6.647	88°44'41"
11	2.994	51°58'41"

TANGENT DATA ("UPPCK3" LINE)		
No.	L	BEARING
1	6.399	14°02'40"
2	2.995	78°26'22"
3	10.769	38°26'22"
4	4.979	31°31'06"
5	17.884	38°19'01"
6	15.357	38°01'00"
7	13.225	38°01'00"
8	0.303	14°36'34"
9	13.347	49°00'58"
10	16.641	2°50'14"
11	13.306	35°47'56"

CURVE DATA				
No.	R	Δ	T	L
1	5.000	51°35'55"	2.417	4.503
2	4.500	39°45'39"	1.627	3.123
3	4.500	60°6'21"	2.604	4.721
4	5.000	87°30'58"	4.788	7.637
5	13.000	23°24'27"	2.693	5.311
6	15.250	34°24'24"	4.722	9.158
7	5.250	51°51'10"	2.552	4.751
8	5.250	32°57'42"	1.553	3.020
9	4.000	119°2'38"	6.797	8.311
10	99.004	4°12'40"	3.640	7.277
11	9.500	72°51'32"	7.012	12.080
12	4.000	106°30'42"	5.358	7.436
13	79.999	8°30'47"	5.954	11.886

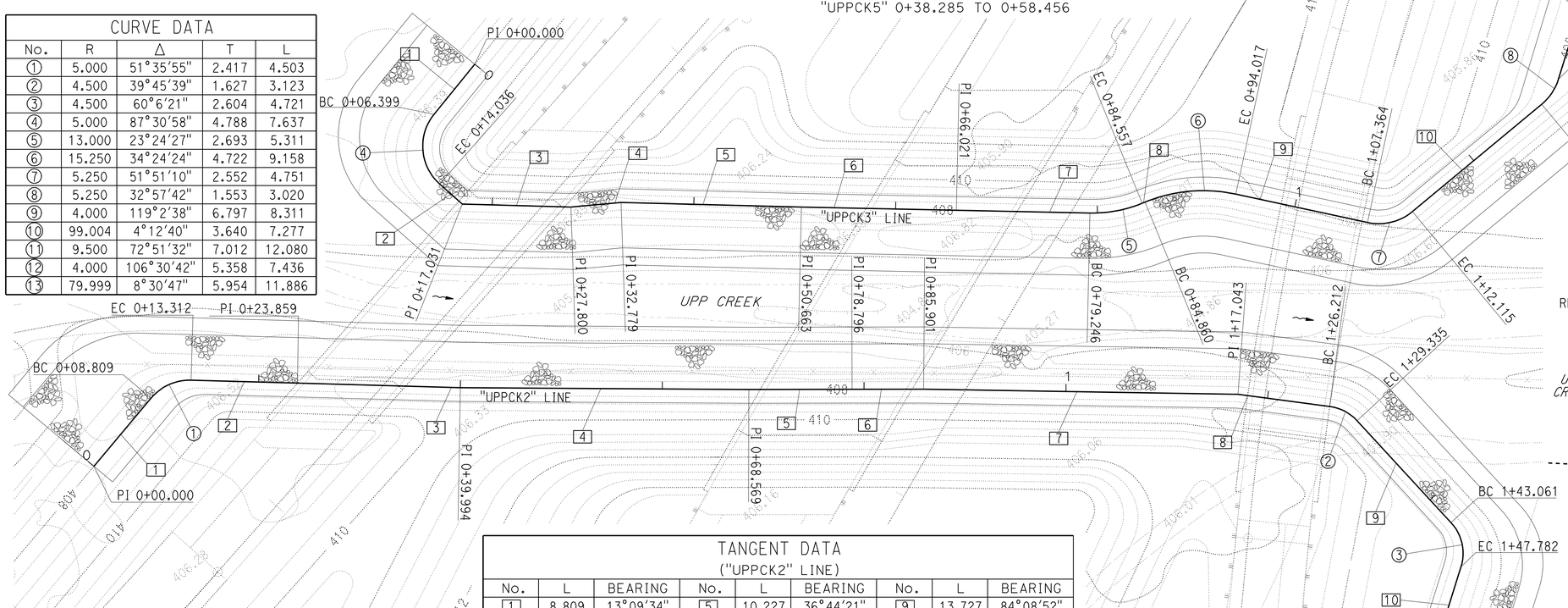

TANGENT DATA ("UPPCK2" LINE)								
No.	L	BEARING	No.	L	BEARING	No.	L	BEARING
1	8.809	13°09'34"	5	10.227	36°44'21"	9	13.727	84°08'52"
2	10.547	38°26'22"	6	7.105	36°44'21"	10	7.909	35°44'46"
3	16.136	38°26'22"	7	31.142	37°46'01"			
4	28.575	37°12'07"	8	9.168	44°23'12"			

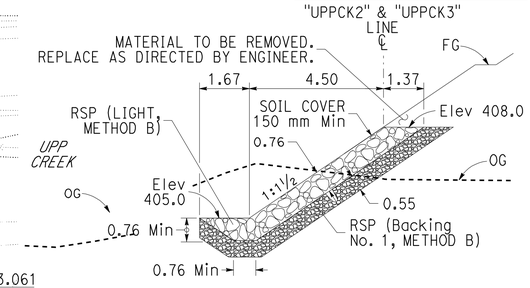

ROCK SLOPE PROTECTION
UPP CREEK
"UPPCK2" 0+13.312 TO 1+43.061
"UPPCK3" 0+17.031 TO 1+28.757

ALL DIMENSIONS ARE IN METERS UNLESS OTHERWISE SHOWN.

DRAINAGE DETAILS

NO SCALE

DD-19

CALCULATED-DESIGNED BY	KAO THAO
CHECKED BY	SCOTT FOSTER
REVISED BY	MGA
DATE REVISED	05-30-11
FUNCTIONAL SUPERVISOR	DOUGLAS S. JONES

STATE OF CALIFORNIA - DEPARTMENT OF TRANSPORTATION
Caltrans 03-DESIGN EAST

LAST REVISION 05-30-11 | DATE PLOTTED => 28-JAN-2012 | TIME PLOTTED => 07:01

NOTES:

1. FOR ACCURATE RIGHT OF WAY DATA, CONTACT RIGHT OF WAY ENGINEERING AT THE DISTRICT OFFICE.
2. FOR BREAK LOCATION & "G" GAP DISTANCE, SEE "CAMBER DESIGN TABLE" ON PROFILE SHEET FOR EACH TEMPORARY DRAINAGE SYSTEM.

TDS No.	FOR MORE INFORMATION SEE SHEET		
⬡	D-	DD-	ECD-
T-1	12	21,27	-

Dist	COUNTY	ROUTE	KILOMETER POST TOTAL PROJECT	SHEET No.	TOTAL SHEETS
01	Men	101	R69.4/R78.9	353	939

Mitch Andrus 9-22-11
REGISTERED CIVIL ENGINEER DATE

1-23-12
PLANS APPROVAL DATE

REGISTERED PROFESSIONAL ENGINEER MITCH ANDRUS No. C48753 Exp. 9-30-12 CIVIL STATE OF CALIFORNIA

THE STATE OF CALIFORNIA OR ITS OFFICERS OR AGENTS SHALL NOT BE RESPONSIBLE FOR THE ACCURACY OR COMPLETENESS OF ELECTRONIC COPIES OF THIS PLAN SHEET.

Caltrans Metric

CULVERT CAMBER DESIGN DETAIL

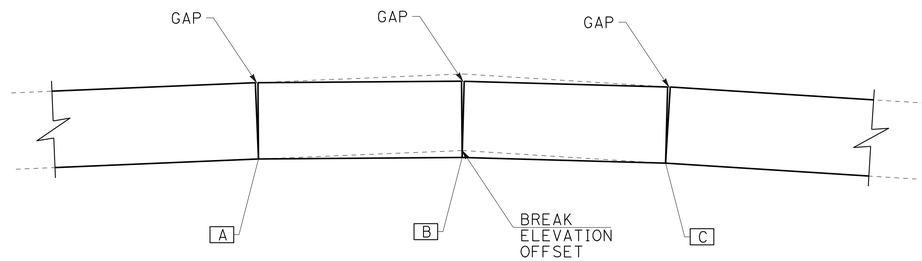

TYPICAL CAMBER AT TOP

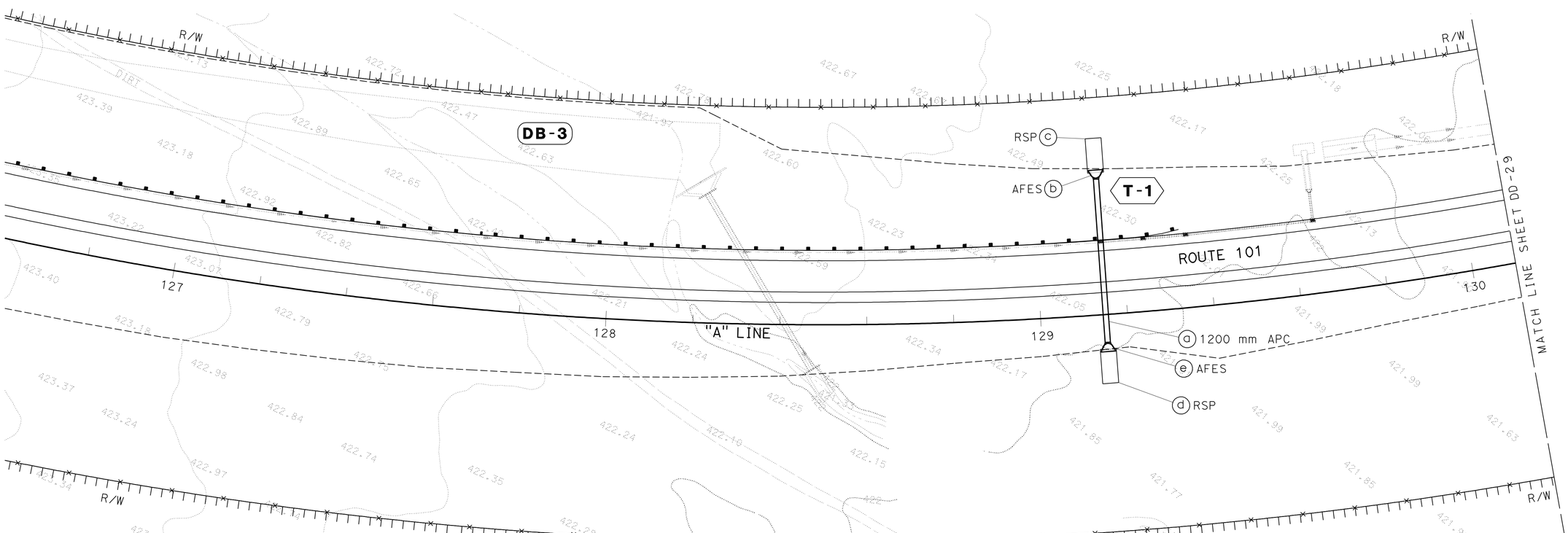

ALL DIMENSIONS ARE IN METERS UNLESS OTHERWISE SHOWN.

DRAINAGE DETAILS

NO SCALE

DD-20

APPROVED FOR DRAINAGE WORK ONLY

MGA	05-30-11
REVISED BY	DATE REVISED
KAO THAO	SCOTT FOSTER
CALCULATED-DESIGNED BY	CHECKED BY
FUNCTIONAL SUPERVISOR	DOUGLAS S. JONES

STATE OF CALIFORNIA - DEPARTMENT OF TRANSPORTATION
Caltrans 03-DESIGN EAST

LAST REVISION 08-11-11 | DATE PLOTTED => 31-JAN-2012 | TIME PLOTTED => 13:05

Dist	COUNTY	ROUTE	KILOMETER POST TOTAL PROJECT	SHEET No.	TOTAL SHEETS
01	Men	101	R69.4/R78.9	354	939

Mitch Andrus 9-22-11
REGISTERED CIVIL ENGINEER DATE

1-23-12
PLANS APPROVAL DATE

REGISTERED PROFESSIONAL ENGINEER MITCH ANDRUS No. C48753 Exp. 9-30-12 CIVIL STATE OF CALIFORNIA

THE STATE OF CALIFORNIA OR ITS OFFICERS OR AGENTS SHALL NOT BE RESPONSIBLE FOR THE ACCURACY OR COMPLETENESS OF ELECTRONIC COPIES OF THIS PLAN SHEET.

Caltrans Metric

NOTES:

1. FOR ACCURATE RIGHT OF WAY DATA, CONTACT RIGHT OF WAY ENGINEERING AT THE DISTRICT OFFICE.
2. FOR BREAK LOCATION & "G" GAP DISTANCE, SEE "CAMBER DESIGN TABLE" ON PROFILE SHEET FOR EACH TEMPORARY DRAINAGE SYSTEM.

TDS No.	FOR MORE INFORMATION SEE SHEET		
⬡	D-	DD-	ECD-
T-2	13	20,28	-

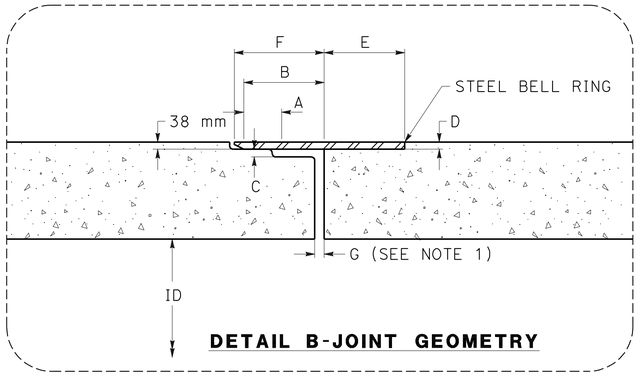

DETAIL B-JOINT GEOMETRY

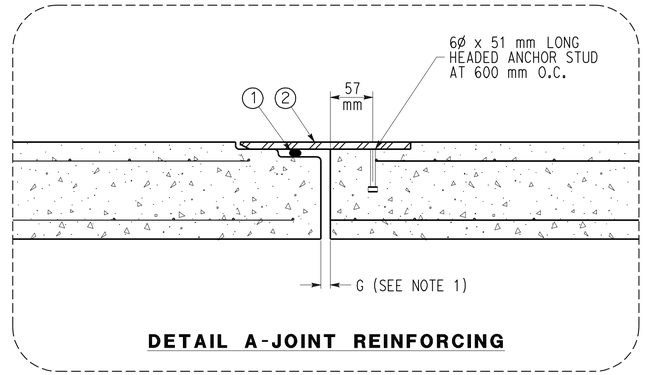

DETAIL A-JOINT REINFORCING

DIMENSIONAL DATA						
A	B	C	D	E	F	G
(mm)	(mm)	(mm)	(mm)	(mm)	(mm)	(mm)
50	108	10.4	9.5	108	121	VAR (SEE NOTE 1)

DIMENSIONAL DATA	
ITEM	DESCRIPTION
1	ISOPRENE GASKET - PS-2300M-4F x Var
2	6.4 mm THICK x 250 mm TALL STEEL BAND

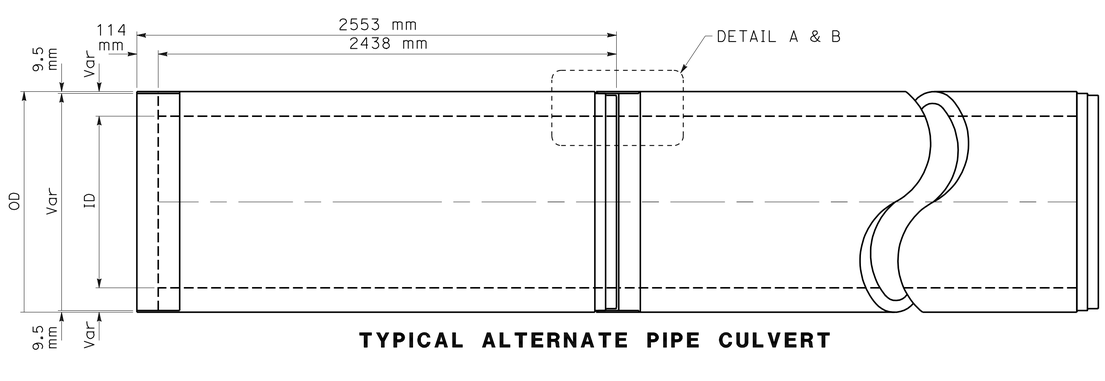

TYPICAL ALTERNATE PIPE CULVERT

CULVERT CAMBER DESIGN DETAIL

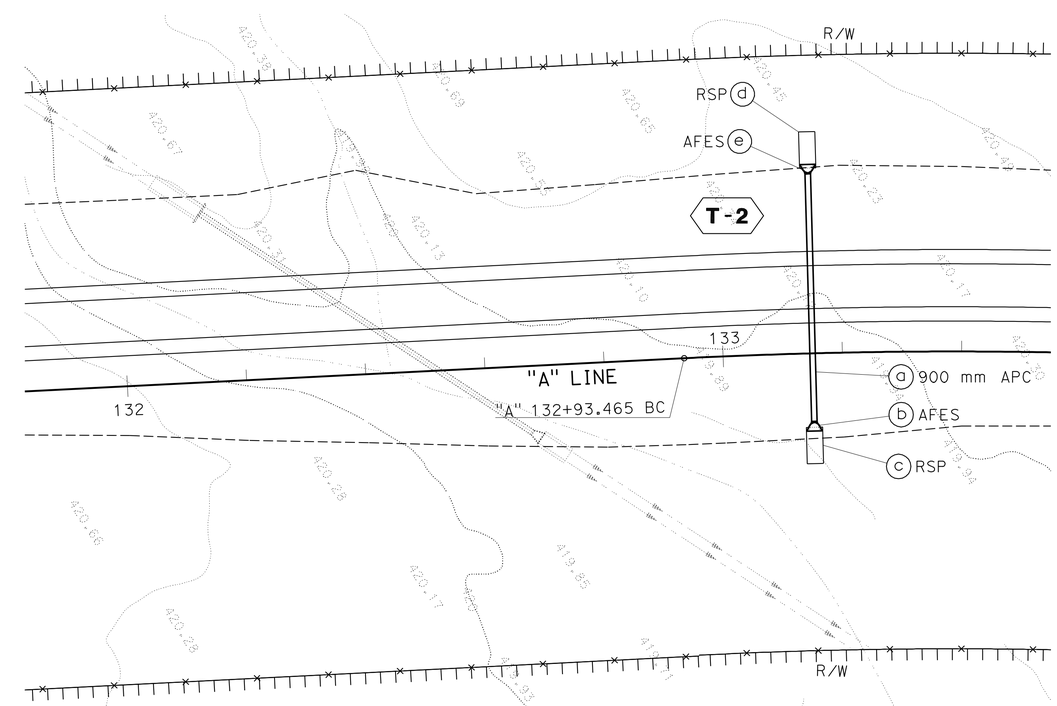

ALL DIMENSIONS ARE IN METERS UNLESS OTHERWISE SHOWN.

DRAINAGE DETAILS

NO SCALE

DD-21

STATE OF CALIFORNIA - DEPARTMENT OF TRANSPORTATION
Caltrans 03-DESIGN EAST

FUNCTIONAL SUPERVISOR: DOUGLAS S. JONES
CALCULATED-DESIGNED BY: KAO THAO
CHECKED BY: SCOTT FOSTER
REVISED BY: MGA
DATE REVISED: 05-30-11

LAST REVISION 05-30-11
DATE PLOTTED => 28-JAN-2012
TIME PLOTTED => 07:02

NOTES:

1. FOR ACCURATE RIGHT OF WAY DATA, CONTACT RIGHT OF WAY ENGINEERING AT THE DISTRICT OFFICE.
2. FOR BREAK LOCATION & "G" GAP DISTANCE, SEE "CAMBER DESIGN TABLE" ON PROFILE SHEET FOR EACH TEMPORARY DRAINAGE SYSTEM.

TDS No.	FOR MORE INFORMATION SEE SHEET		
⬡	D-	DD-	ECD-
T-3	23	20,21,29	-

Dist	COUNTY	ROUTE	KILOMETER POST TOTAL PROJECT	SHEET No.	TOTAL SHEETS
01	Men	101	R69.4/R78.9	355	939

Mitch Andrus 9-22-11
REGISTERED CIVIL ENGINEER DATE

1-23-12
PLANS APPROVAL DATE

REGISTERED PROFESSIONAL ENGINEER MITCH ANDRUS No. C48753 Exp. 9-30-12 CIVIL STATE OF CALIFORNIA

THE STATE OF CALIFORNIA OR ITS OFFICERS OR AGENTS SHALL NOT BE RESPONSIBLE FOR THE ACCURACY OR COMPLETENESS OF ELECTRONIC COPIES OF THIS PLAN SHEET.

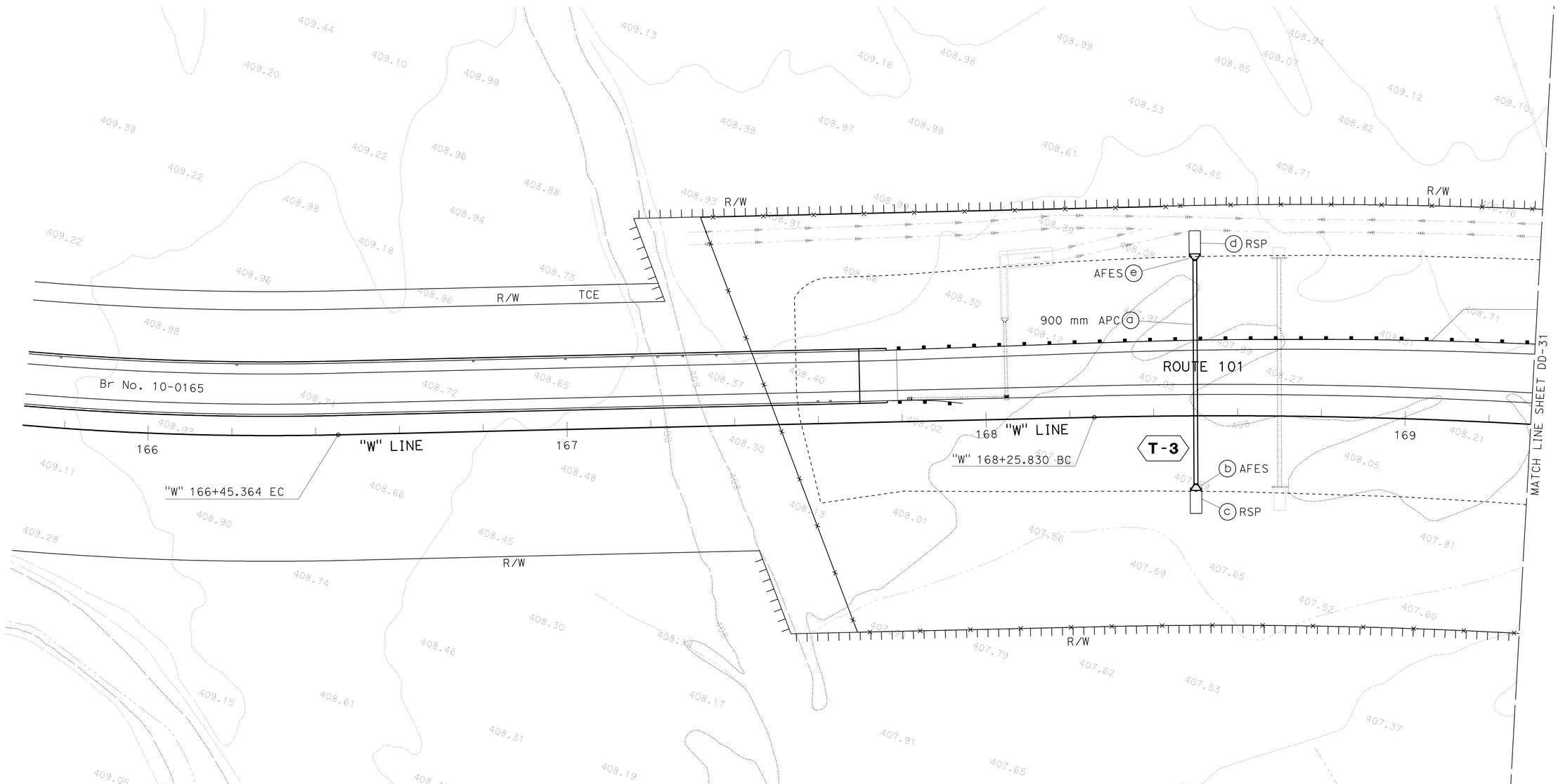

ALL DIMENSIONS ARE IN METERS UNLESS OTHERWISE SHOWN.

DRAINAGE DETAILS

NO SCALE

DD-22

APPROVED FOR DRAINAGE WORK ONLY

MGA	05-30-11	REVISED BY	DATE REVISED
KAO THAO	SCOTT FOSTER	CALCULATED-DESIGNED BY	CHECKED BY
FUNCTIONAL SUPERVISOR	DOUGLAS S. JONES		

STATE OF CALIFORNIA - DEPARTMENT OF TRANSPORTATION
Caltrans 03-DESIGN EAST

LAST REVISION 08-11-11 DATE PLOTTED => 31-JAN-2012 TIME PLOTTED => 13:05

NOTES:

1. FOR ACCURATE RIGHT OF WAY DATA, CONTACT RIGHT OF WAY ENGINEERING AT THE DISTRICT OFFICE.
2. FOR BREAK LOCATION & "G" GAP DISTANCE, SEE "CAMBER DESIGN TABLE" ON PROFILE SHEET FOR EACH TEMPORARY DRAINAGE SYSTEM.

TDS No.	FOR MORE INFORMATION SEE SHEET		
⬡	D-	DD-	ECD-
T-4	24	20,21,30	-

Dist	COUNTY	ROUTE	KILOMETER POST TOTAL PROJECT	SHEET No.	TOTAL SHEETS
01	Men	101	R69.4/R78.9	356	939

Mitch Andrus 9-22-11
REGISTERED CIVIL ENGINEER DATE

1-23-12
PLANS APPROVAL DATE

REGISTERED PROFESSIONAL ENGINEER MITCH ANDRUS No. C48753 Exp. 9-30-12 CIVIL STATE OF CALIFORNIA

THE STATE OF CALIFORNIA OR ITS OFFICERS OR AGENTS SHALL NOT BE RESPONSIBLE FOR THE ACCURACY OR COMPLETENESS OF ELECTRONIC COPIES OF THIS PLAN SHEET.

Caltrans Metric

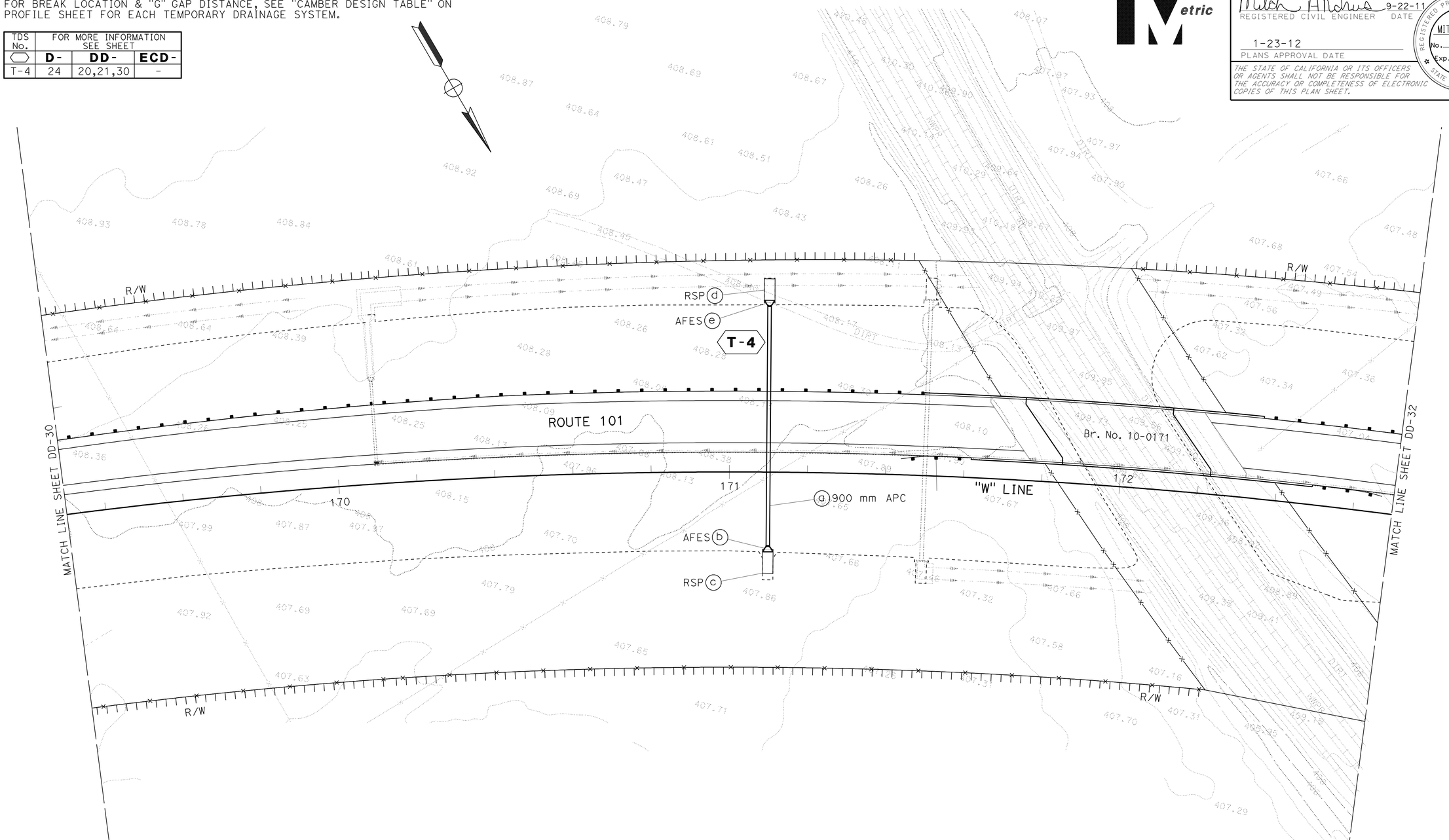

ALL DIMENSIONS ARE IN METERS UNLESS OTHERWISE SHOWN.

DRAINAGE DETAILS

NO SCALE

DD-23

APPROVED FOR DRAINAGE WORK ONLY

STATE OF CALIFORNIA - DEPARTMENT OF TRANSPORTATION
Caltrans 03-DESIGN EAST

FUNCTIONAL SUPERVISOR: DOUGLAS S. JONES
CALCULATED-DESIGNED BY: KAO THAO
CHECKED BY: SCOTT FOSTER
REVISED BY: MGA
DATE REVISED: 05-30-11

LAST REVISION 08-11-11
DATE PLOTTED => 31-JAN-2012
TIME PLOTTED => 13:05

NOTES:

1. FOR ACCURATE RIGHT OF WAY DATA, CONTACT RIGHT OF WAY ENGINEERING AT THE DISTRICT OFFICE.
2. FOR BREAK LOCATION & "G" GAP DISTANCE, SEE "CAMBER DESIGN TABLE" ON PROFILE SHEET FOR EACH TEMPORARY DRAINAGE SYSTEM.

TDS No.	FOR MORE INFORMATION SEE SHEET		
⬡	D-	DD-	ECD-
T-5	25	1,20,21,31	-
T-6	25	1,20,21,32	-
T-7	25	1,20,21,33	-

Dist	COUNTY	ROUTE	KILOMETER POST TOTAL PROJECT	SHEET No.	TOTAL SHEETS
01	Men	101	R69.4/R78.9	357	939

Mitch Andrus 9-22-11
REGISTERED CIVIL ENGINEER DATE

1-23-12
PLANS APPROVAL DATE

REGISTERED PROFESSIONAL ENGINEER MITCH ANDRUS No. C48753 Exp. 9-30-12 CIVIL STATE OF CALIFORNIA

THE STATE OF CALIFORNIA OR ITS OFFICERS OR AGENTS SHALL NOT BE RESPONSIBLE FOR THE ACCURACY OR COMPLETENESS OF ELECTRONIC COPIES OF THIS PLAN SHEET.

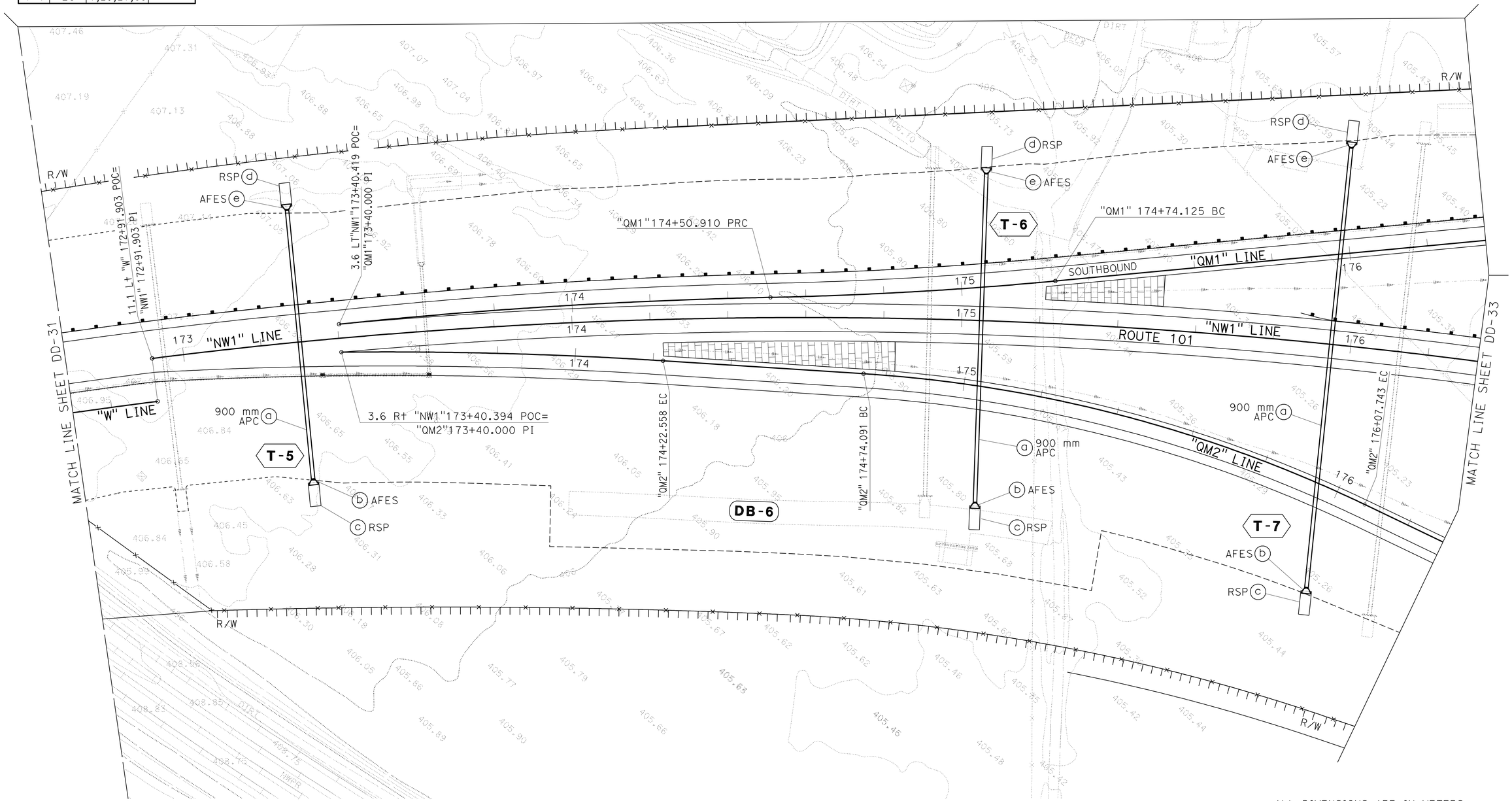

ALL DIMENSIONS ARE IN METERS UNLESS OTHERWISE SHOWN.

DRAINAGE DETAILS

NO SCALE

DD-24

APPROVED FOR DRAINAGE WORK ONLY

STATE OF CALIFORNIA - DEPARTMENT OF TRANSPORTATION
Caltrans 03-DESIGN EAST

FUNCTIONAL SUPERVISOR: DOUGLAS S. JONES
CALCULATED-DESIGNED BY: KAO THAO
CHECKED BY: SCOTT FOSTER
REVISED BY: MGA
DATE REVISED: 05-30-11

LAST REVISION 08-11-11
DATE PLOTTED => 31-JAN-2012
TIME PLOTTED => 13:05

NOTES:

1. FOR ACCURATE RIGHT OF WAY DATA, CONTACT RIGHT OF WAY ENGINEERING AT THE DISTRICT OFFICE.
2. FOR BREAK LOCATION & "G" GAP DISTANCE, SEE "CAMBER DESIGN TABLE" ON PROFILE SHEET FOR EACH TEMPORARY DRAINAGE SYSTEM.

Dist	COUNTY	ROUTE	KILOMETER POST TOTAL PROJECT	SHEET No.	TOTAL SHEETS
01	Men	101	R69.4/R78.9	358	939

Mitch Andrus 9-22-11
REGISTERED CIVIL ENGINEER DATE

1-23-12
PLANS APPROVAL DATE

REGISTERED PROFESSIONAL ENGINEER MITCH ANDRUS No. C48753 Exp. 9-30-12 CIVIL STATE OF CALIFORNIA

THE STATE OF CALIFORNIA OR ITS OFFICERS OR AGENTS SHALL NOT BE RESPONSIBLE FOR THE ACCURACY OR COMPLETENESS OF ELECTRONIC COPIES OF THIS PLAN SHEET.

TDS No.	FOR MORE INFORMATION SEE SHEET		
⬡	D-	DD-	ECD-
T-8	29	1,20,21,34	-
T-9	29	1,20,21,35	-

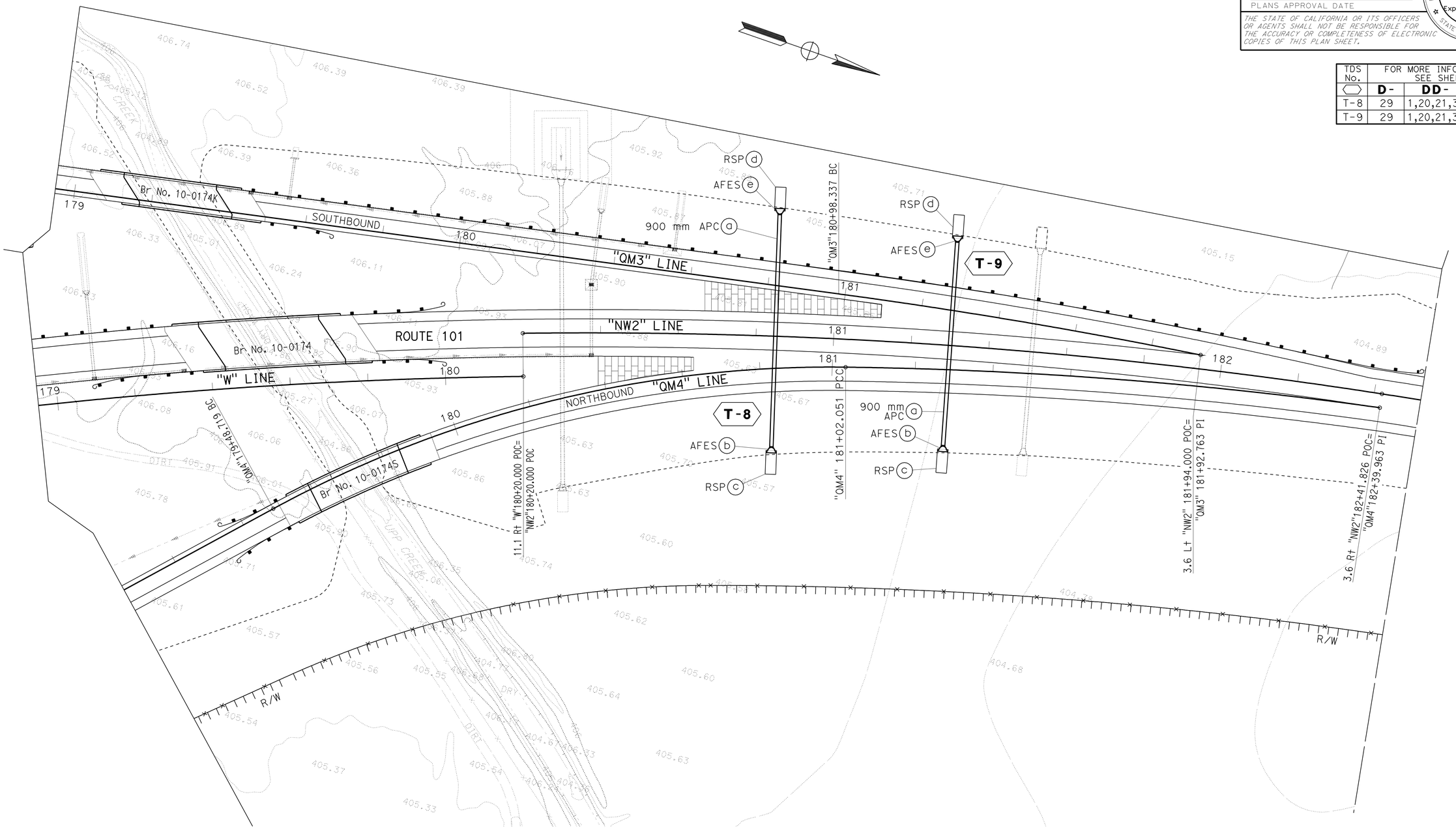

ALL DIMENSIONS ARE IN METERS UNLESS OTHERWISE SHOWN.

DRAINAGE DETAILS

NO SCALE

DD-25

APPROVED FOR DRAINAGE WORK ONLY

REVISED BY	MGA	CALCULATED-DESIGNED BY	KAO THAO
DATE REVISED	05-30-11	CHECKED BY	SCOTT FOSTER
FUNCTIONAL SUPERVISOR	DOUGLAS S. JONES		

STATE OF CALIFORNIA - DEPARTMENT OF TRANSPORTATION
Caltrans **03-DESIGN EAST**

LAST REVISION 08-11-11 DATE PLOTTED => 31-JAN-2012 TIME PLOTTED => 13:05

NOTES:

1. FOR ACCURATE RIGHT OF WAY DATA, CONTACT RIGHT OF WAY ENGINEERING AT THE DISTRICT OFFICE.
2. FOR BREAK LOCATION & "G" GAP DISTANCE, SEE "CAMBER DESIGN TABLE" ON PROFILE SHEET FOR EACH TEMPORARY DRAINAGE SYSTEM.

TDS No.	FOR MORE INFORMATION SEE SHEET		
⬡	D-	DD-	ECD-
T-10	31	1,20,21,36	-

Dist	COUNTY	ROUTE	KILOMETER POST TOTAL PROJECT	SHEET No.	TOTAL SHEETS
01	Men	101	R69.4/R78.9	359	939

Mitch Andrus 9-22-11
REGISTERED CIVIL ENGINEER DATE

1-23-12
PLANS APPROVAL DATE

REGISTERED PROFESSIONAL ENGINEER MITCH ANDRUS No. C48753 Exp. 9-30-12 CIVIL STATE OF CALIFORNIA

THE STATE OF CALIFORNIA OR ITS OFFICERS OR AGENTS SHALL NOT BE RESPONSIBLE FOR THE ACCURACY OR COMPLETENESS OF ELECTRONIC COPIES OF THIS PLAN SHEET.

Caltrans Metric

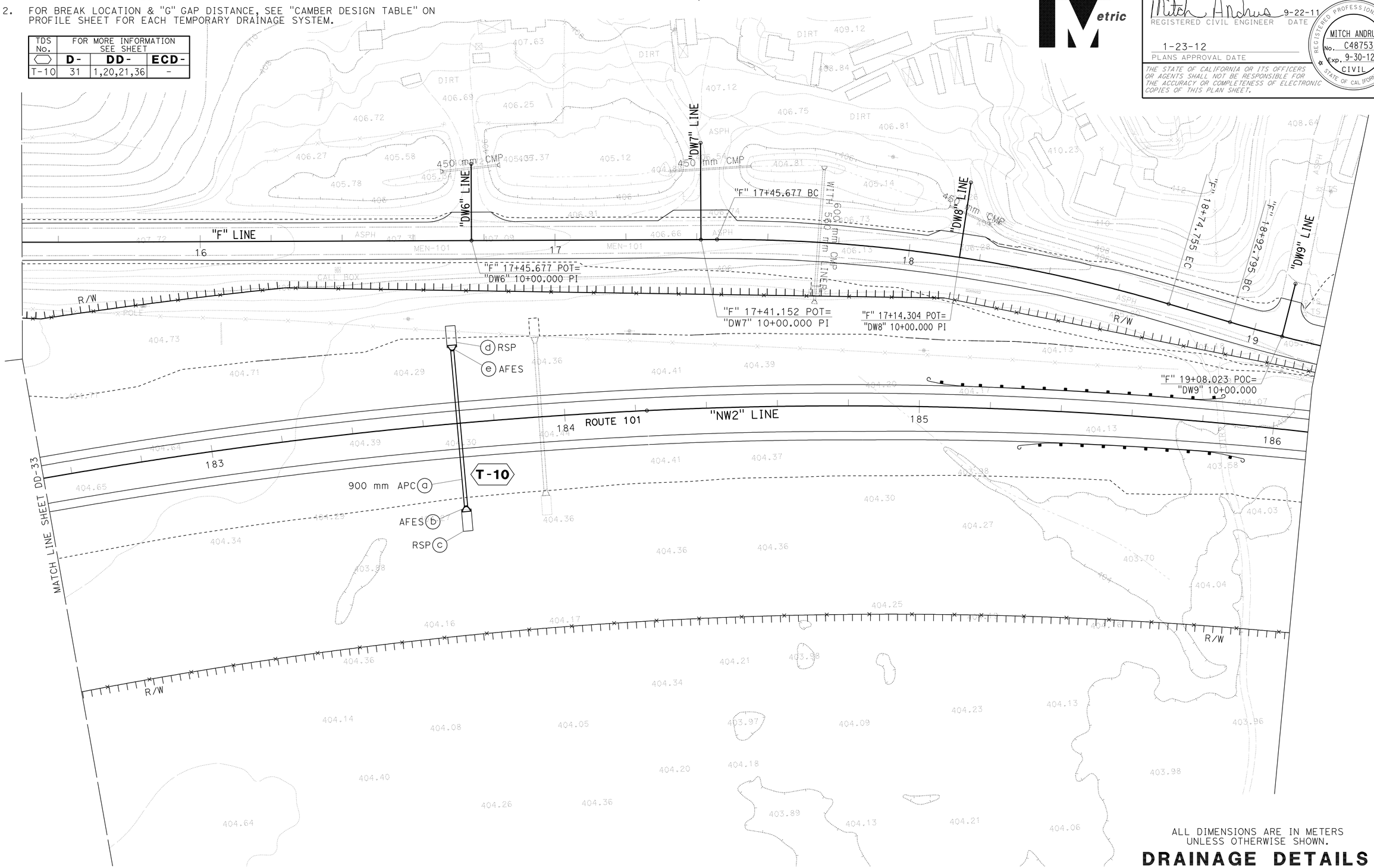

ALL DIMENSIONS ARE IN METERS UNLESS OTHERWISE SHOWN.

DRAINAGE DETAILS

NO SCALE

DD-26

APPROVED FOR DRAINAGE WORK ONLY

STATE OF CALIFORNIA - DEPARTMENT OF TRANSPORTATION
Caltrans 03-DESIGN EAST

FUNCTIONAL SUPERVISOR: DOUGLAS S. JONES
CALCULATED-DESIGNED BY: KAO THAO
CHECKED BY: SCOTT FOSTER
REVISED BY: MGA
DATE REVISED: 05-30-11

LAST REVISION 08-11-11
DATE PLOTTED => 31-JAN-2012
TIME PLOTTED => 13:05

Dist	COUNTY	ROUTE	KILOMETER POST TOTAL PROJECT	SHEET No.	TOTAL SHEETS
01	Men	101	R69.4/R78.9	360	939

Mitch Andrus 9-22-11
REGISTERED CIVIL ENGINEER DATE

1-23-12
PLANS APPROVAL DATE

REGISTERED PROFESSIONAL ENGINEER MITCH ANDRUS No. C48753 Exp. 9-30-12 CIVIL STATE OF CALIFORNIA

THE STATE OF CALIFORNIA OR ITS OFFICERS OR AGENTS SHALL NOT BE RESPONSIBLE FOR THE ACCURACY OR COMPLETENESS OF ELECTRONIC COPIES OF THIS PLAN SHEET.

Caltrans Metric

TDS No.	FOR MORE INFORMATION SEE SHEET		
⬡	D-	DD-	ECD-
T-1	12	1,20, 21	-

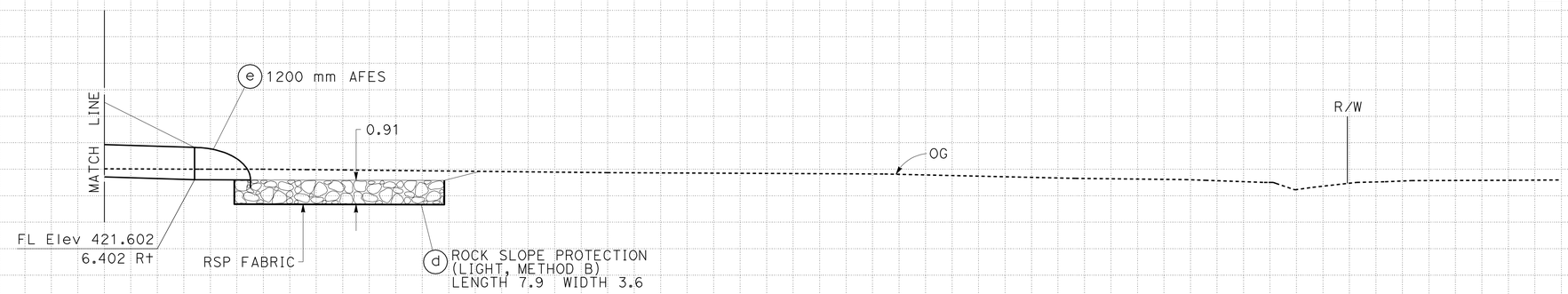

CAMBER DESIGN TABLE

	1st BREAK					2nd BREAK			
☐	STATION	OFFSET	Elev	GAP	☐	STATION	OFFSET	Elev	GAP
A	"A" 129+15.000	21.038Lt	421.913	9.7 mm	A	"A" 129+15.000	6.039Lt	421.933	12.2 mm
B	"A" 129+15.000	18.600Lt	421.945	9.7 mm	B	"A" 129+15.000	3.600Lt	421.903	12.2 mm
C	"A" 129+15.000	16.161Lt	421.959	9.7 mm	C	"A" 129+15.000	1.163Lt	421.848	12.2 mm

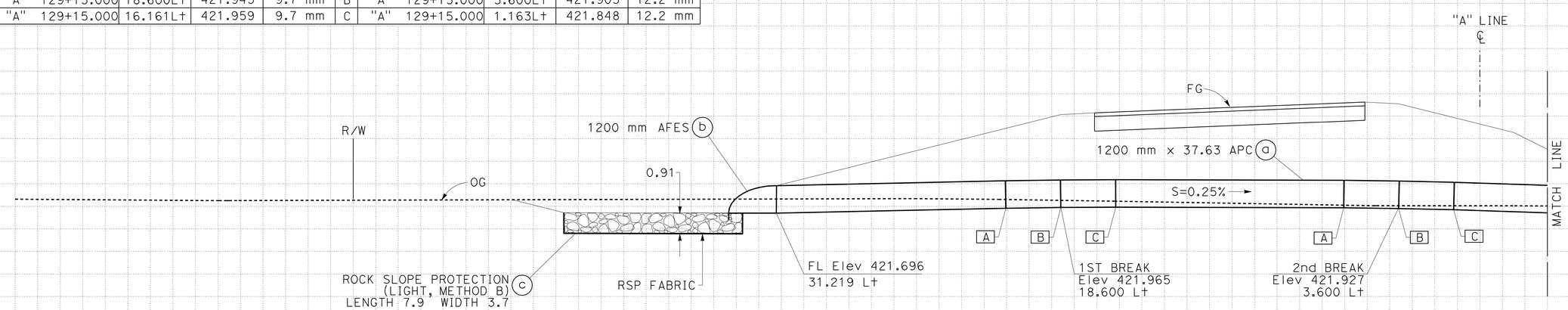

TEMPORARY DRAINAGE SYSTEM ⬡ T-1

"A"129+15.000
NO SKEW

ALL DIMENSIONS ARE IN METERS UNLESS OTHERWISE SHOWN

DRAINAGE DETAILS

SCALE: Horiz 1:100
Vert 1:100

APPROVED FOR DRAINAGE WORK ONLY.

DD-27

REVISED BY	DATE REVISED
GMA	05-31-11

CALCULATED-DESIGNED BY: KAO THAO
CHECKED BY: SCOTT FOSTER
FUNCTIONAL SUPERVISOR: DOUGLAS S. JONES

STATE OF CALIFORNIA - DEPARTMENT OF TRANSPORTATION
Caltrans 03-DESIGN EAST

LAST REVISION 08-11-11
DATE PLOTTED => 28-JAN-2012
TIME PLOTTED => 07:02

Dist	COUNTY	ROUTE	KILOMETER POST TOTAL PROJECT	SHEET No.	TOTAL SHEETS
01	Men	101	R69.4/R78.9	361	939

Mitch Andrus 9-22-11
REGISTERED CIVIL ENGINEER DATE

1-23-12
PLANS APPROVAL DATE

REGISTERED PROFESSIONAL ENGINEER MITCH ANDRUS No. C48753 Exp. 9-30-12 CIVIL STATE OF CALIFORNIA

THE STATE OF CALIFORNIA OR ITS OFFICERS OR AGENTS SHALL NOT BE RESPONSIBLE FOR THE ACCURACY OR COMPLETENESS OF ELECTRONIC COPIES OF THIS PLAN SHEET.

Caltrans Metric

TDS No.	FOR MORE INFORMATION SEE SHEET		
⬡	D-	DD-	ECD-
T-2	13	1,20, 21	-

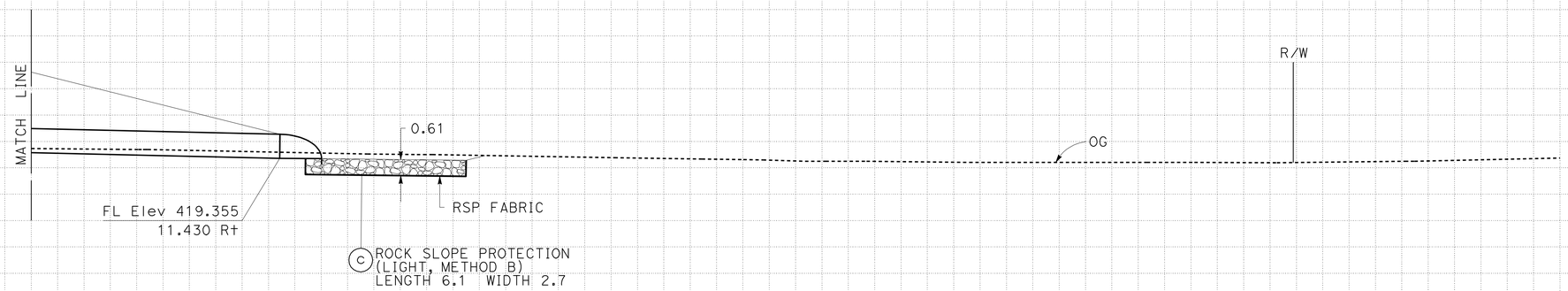

CAMBER DESIGN TABLE

	1st BREAK					2nd BREAK			
☐	STATION	OFFSET	Elev	GAP	☐	STATION	OFFSET	Elev	GAP
A	"A" 133+05.000	19.538Lt	419.726	6.3 mm	A	"A" 133+05.000	6.038Lt	419.709	5.4 mm
B	"A" 133+05.000	17.100Lt	419.747	6.3 mm	B	"A" 133+05.000	3.600Lt	419.682	5.4 mm
C	"A" 133+05.000	14.662Lt	419.752	6.3 mm	C	"A" 133+05.000	1.162Lt	419.641	5.4 mm

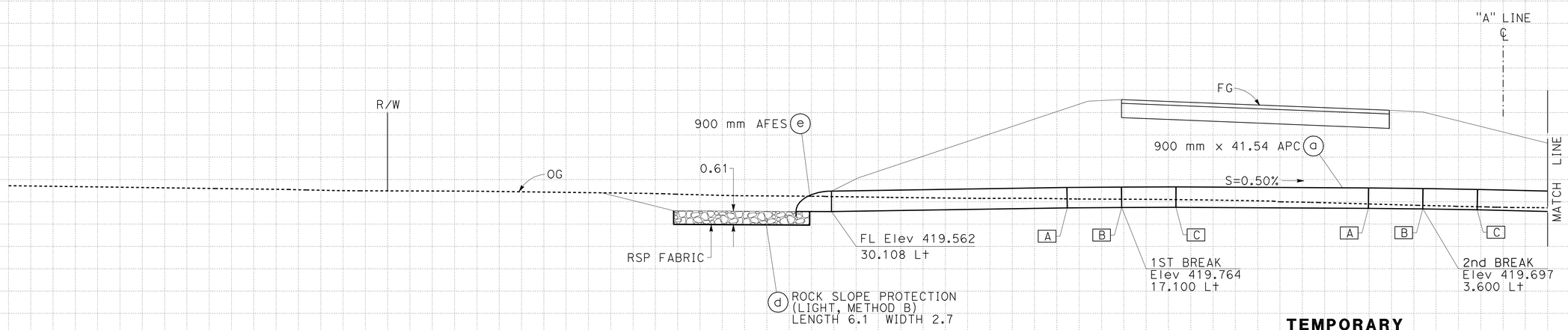

TEMPORARY DRAINAGE SYSTEM T-2

"A"133+15.000
NO SKEW

ALL DIMENSIONS ARE IN METERS
UNLESS OTHERWISE SHOWN

DRAINAGE DETAILS

SCALE: Horiz 1:100
Vert 1:100

APPROVED FOR DRAINAGE WORK ONLY.

DD-28

REVISED BY	DATE REVISED
GMA	05-31-11

CALCULATED-DESIGNED BY: KAO THAO
CHECKED BY: SCOTT FOSTER
FUNCTIONAL SUPERVISOR: DOUGLAS S. JONES

STATE OF CALIFORNIA - DEPARTMENT OF TRANSPORTATION
Caltrans 03-DESIGN EAST

LAST REVISION 08-11-11 DATE PLOTTED => 28-JAN-2012 TIME PLOTTED => 07:03

Dist	COUNTY	ROUTE	KILOMETER POST TOTAL PROJECT	SHEET No.	TOTAL SHEETS
01	Men	101	R69.4/R78.9	362	939

Mitch Andrus 9-22-11
REGISTERED CIVIL ENGINEER DATE

1-23-12
PLANS APPROVAL DATE

REGISTERED PROFESSIONAL ENGINEER MITCH ANDRUS No. C48753 Exp. 9-30-12 CIVIL STATE OF CALIFORNIA

THE STATE OF CALIFORNIA OR ITS OFFICERS OR AGENTS SHALL NOT BE RESPONSIBLE FOR THE ACCURACY OR COMPLETENESS OF ELECTRONIC COPIES OF THIS PLAN SHEET.

Caltrans Metric

TDS No.	FOR MORE INFORMATION SEE SHEET		
⬡	D-	DD-	ECD-
T-3	23	1,20, 21, 22	-

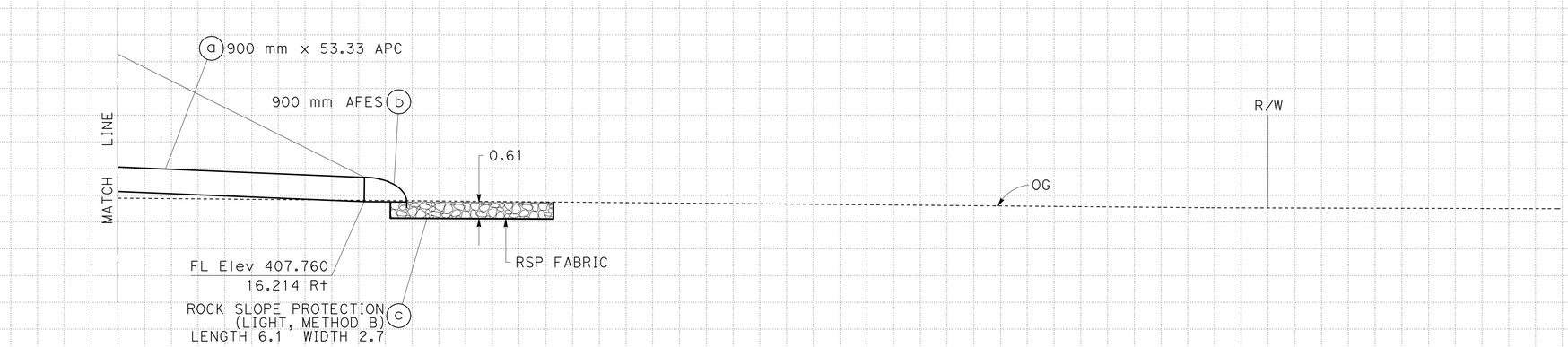

CAMBER DESIGN TABLE

	1st BREAK					2nd BREAK			
☐	STATION	OFFSET	Elev	GAP	☐	STATION	OFFSET	Elev	GAP
A	"W" 168+50.000	20.506Lt	408.575	11.6 mm	A	"W" 168+50.000	6.039Lt	408.596	11.1 mm
B	"W" 168+50.000	18.068Lt	408.625	11.6 mm	B	"W" 168+50.000	3.601Lt	408.554	11.1 mm
C	"W" 168+50.000	15.629Lt	408.643	11.6 mm	C	"W" 168+50.000	1.163Lt	408.482	11.1 mm

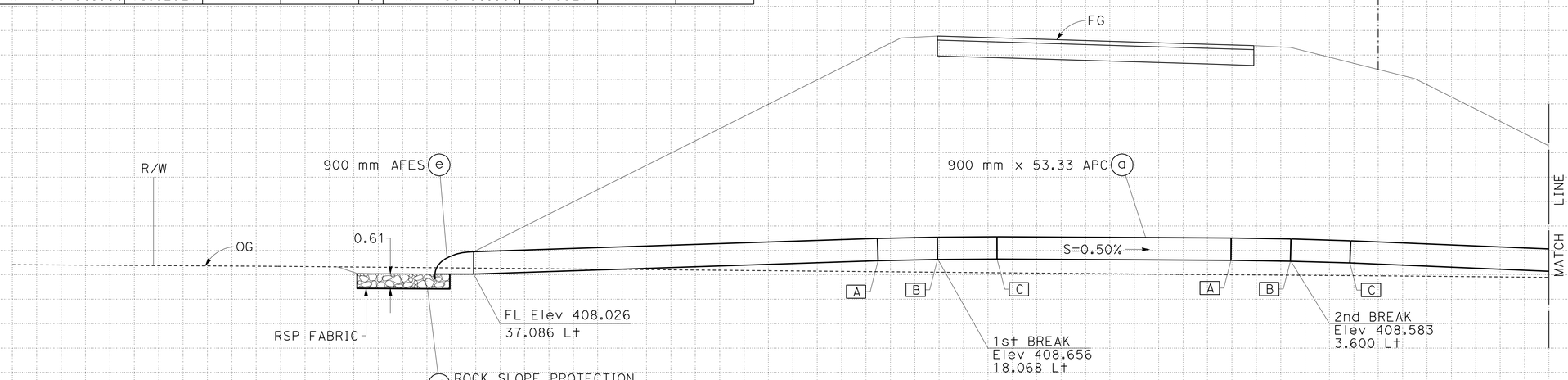

TEMPORARY DRAINAGE SYSTEM ⬡ T-3

"W"168+50.000
NO SKEW

APPROVED FOR DRAINAGE WORK ONLY.

ALL DIMENSIONS ARE IN METERS
UNLESS OTHERWISE SHOWN

DRAINAGE DETAILS

SCALE: Horiz 1:100
Vert 1:100

DD-29

REVISED BY	DATE REVISED
GMA	05-31-11

CALCULATED-DESIGNED BY: KAO THAO
CHECKED BY: SCOTT FOSTER
FUNCTIONAL SUPERVISOR: DOUGLAS S. JONES

STATE OF CALIFORNIA - DEPARTMENT OF TRANSPORTATION
Caltrans 03-DESIGN EAST

LAST REVISION 08-11-11 DATE PLOTTED => 28-JAN-2012 TIME PLOTTED => 07:03

Dist	COUNTY	ROUTE	KILOMETER POST TOTAL PROJECT	SHEET No.	TOTAL SHEETS
01	Men	101	R69.4/R78.9	363	939

Caltrans Metric

Mitch Andrus 9-22-11
REGISTERED CIVIL ENGINEER DATE

1-23-12
PLANS APPROVAL DATE

REGISTERED PROFESSIONAL ENGINEER MITCH ANDRUS No. C48753 Exp. 9-30-12 CIVIL STATE OF CALIFORNIA

THE STATE OF CALIFORNIA OR ITS OFFICERS OR AGENTS SHALL NOT BE RESPONSIBLE FOR THE ACCURACY OR COMPLETENESS OF ELECTRONIC COPIES OF THIS PLAN SHEET.

TDS No.	FOR MORE INFORMATION SEE SHEET		
⬡	D-	DD-	ECD-
T-4	24	1,20, 21, 23	-

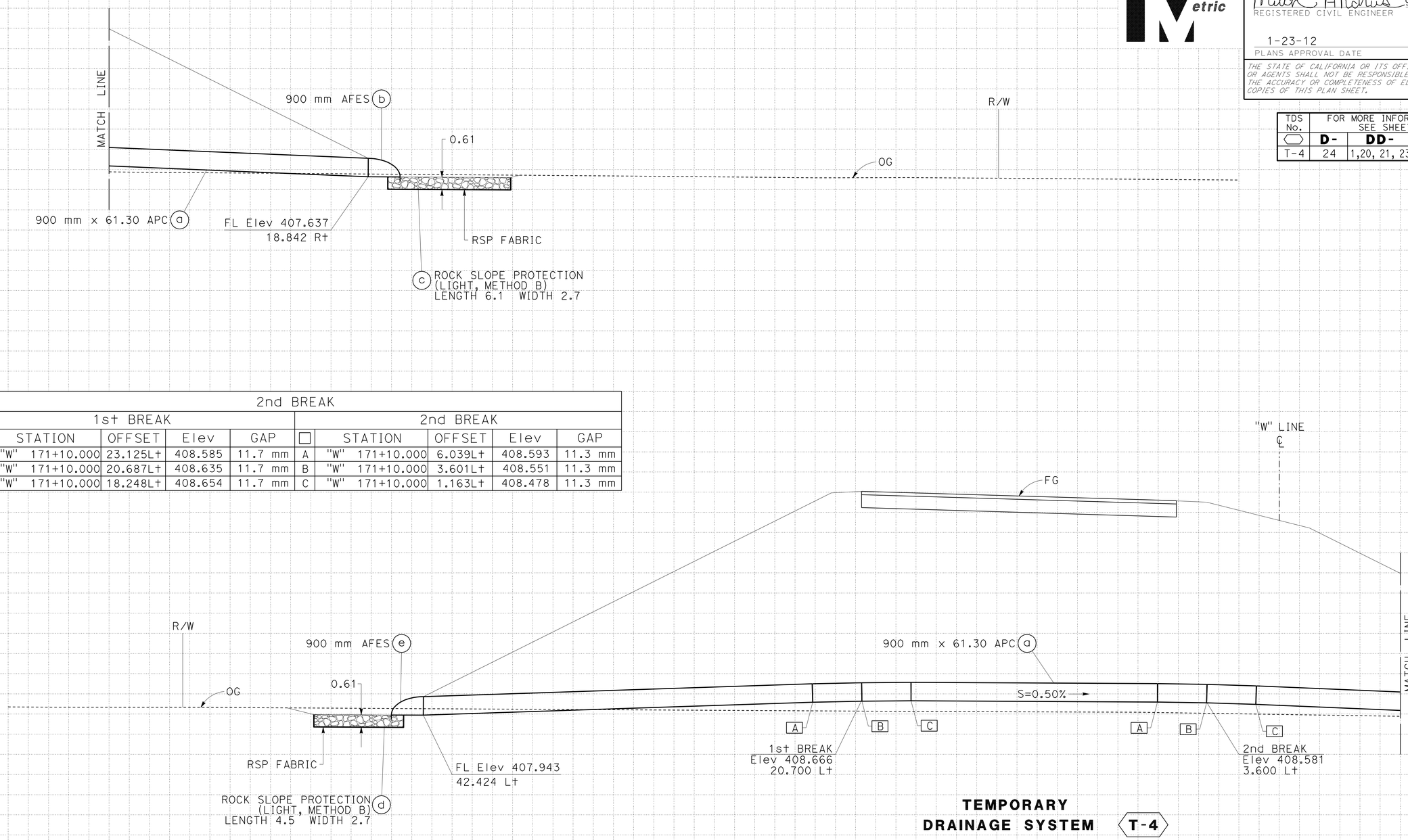

2nd BREAK									
1st BREAK					2nd BREAK				
☐	STATION	OFFSET	Elev	GAP	☐	STATION	OFFSET	Elev	GAP
A	"W" 171+10.000	23.125Lt	408.585	11.7 mm	A	"W" 171+10.000	6.039Lt	408.593	11.3 mm
B	"W" 171+10.000	20.687Lt	408.635	11.7 mm	B	"W" 171+10.000	3.601Lt	408.551	11.3 mm
C	"W" 171+10.000	18.248Lt	408.654	11.7 mm	C	"W" 171+10.000	1.163Lt	408.478	11.3 mm

TEMPORARY DRAINAGE SYSTEM (T-4)

"W"171+10.000
NO SKEW

APPROVED FOR DRAINAGE WORK ONLY.

ALL DIMENSIONS ARE IN METERS
UNLESS OTHERWISE SHOWN

DRAINAGE DETAILS

SCALE: Horiz 1:100
Vert 1:100

DD-30

REVISED BY	DATE REVISED
GMA	05-31-11

CALCULATED-DESIGNED BY: KAO THAO
CHECKED BY: SCOTT FOSTER
FUNCTIONAL SUPERVISOR: DOUGLAS S. JONES

STATE OF CALIFORNIA - DEPARTMENT OF TRANSPORTATION
Caltrans 03-DESIGN EAST

LAST REVISION 08-11-11
DATE PLOTTED => 28-JAN-2012
TIME PLOTTED => 07:03

Dist	COUNTY	ROUTE	KILOMETER POST TOTAL PROJECT	SHEET No.	TOTAL SHEETS
01	Men	101	R69.4/R78.9	364	939

Mitch Andrus 9-22-11
REGISTERED CIVIL ENGINEER DATE

1-23-12
PLANS APPROVAL DATE

REGISTERED PROFESSIONAL ENGINEER MITCH ANDRUS No. C48753 Exp. 9-30-12 CIVIL STATE OF CALIFORNIA

THE STATE OF CALIFORNIA OR ITS OFFICERS OR AGENTS SHALL NOT BE RESPONSIBLE FOR THE ACCURACY OR COMPLETENESS OF ELECTRONIC COPIES OF THIS PLAN SHEET.

Caltrans Metric

TDS No.	FOR MORE INFORMATION SEE SHEET		
⬡	D-	DD-	ECD-
T-5	25	1,20, 21, 24	-

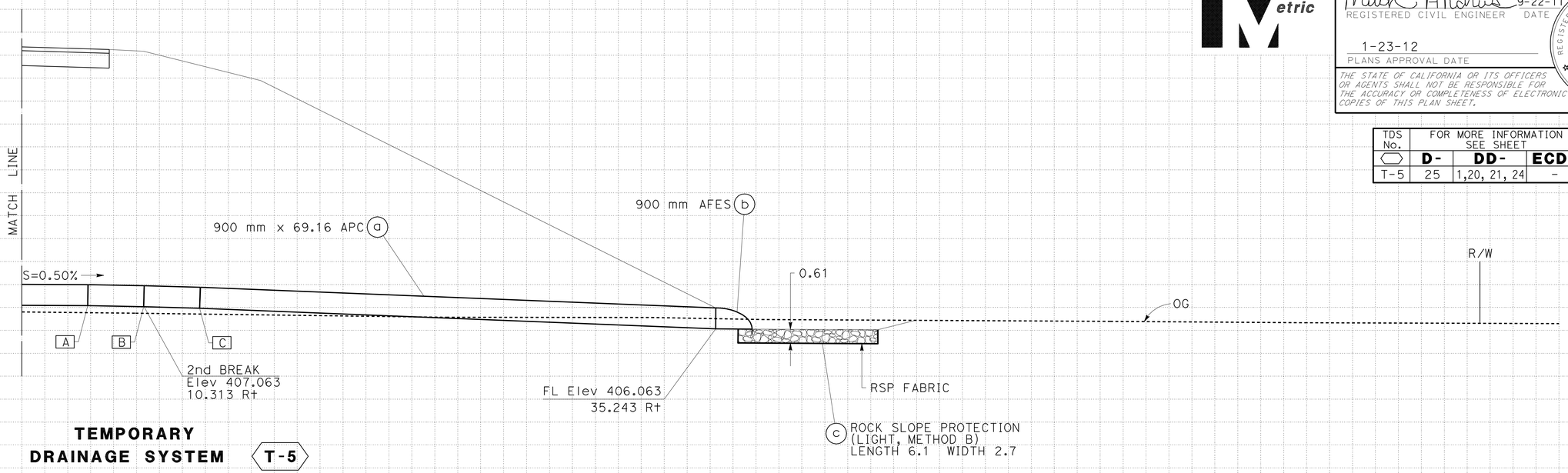

TEMPORARY DRAINAGE SYSTEM ⬡ T-5

"NW1"173+30.000
NO SKEW

CAMBER DESIGN TABLE

	1st BREAK					2nd BREAK			
☐	STATION	OFFSET	Elev	GAP	☐	STATION	OFFSET	Elev	GAP
A	"NW1" 173+30.000	12.023Lt	407.087	11.0 mm	A	"NW1" 173+30.000	7.875Rt	407.075	10.7 mm
B	"NW1" 173+30.000	9.585Lt	407.133	11.0 mm	B	"NW1" 173+30.000	10.313Rt	407.034	10.7 mm
C	"NW1" 173+30.000	7.147Lt	407.150	11.0 mm	C	"NW1" 173+30.000	12.750Rt	406.965	10.7 mm

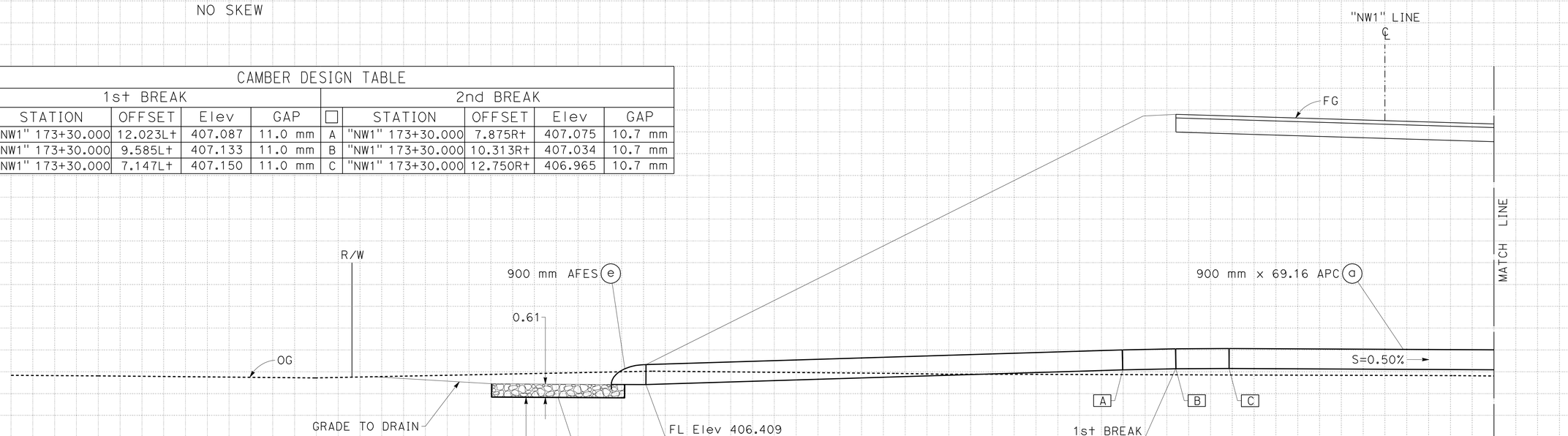

APPROVED FOR DRAINAGE WORK ONLY.

ALL DIMENSIONS ARE IN METERS
UNLESS OTHERWISE SHOWN

DRAINAGE DETAILS

SCALE: Horiz 1:100
Vert 1:100

DD-31

GMA	05-31-11	REVISED BY / DATE REVISED
SCOTT FOSTER	KAO THAO	CALCULATED-DESIGNED BY / CHECKED BY
DOUGLAS S. JONES		FUNCTIONAL SUPERVISOR

STATE OF CALIFORNIA - DEPARTMENT OF TRANSPORTATION
Caltrans 03-DESIGN EAST

LAST REVISION 08-11-11 DATE PLOTTED => 28-JAN-2012 TIME PLOTTED => 07:03

Dist	COUNTY	ROUTE	KILOMETER POST TOTAL PROJECT	SHEET No.	TOTAL SHEETS
01	Men	101	R69.4/R78.9	365	939

Mitch Andrus 9-22-11
REGISTERED CIVIL ENGINEER DATE

1-23-12
PLANS APPROVAL DATE

REGISTERED PROFESSIONAL ENGINEER MITCH ANDRUS No. C48753 Exp. 9-30-12 CIVIL STATE OF CALIFORNIA

THE STATE OF CALIFORNIA OR ITS OFFICERS OR AGENTS SHALL NOT BE RESPONSIBLE FOR THE ACCURACY OR COMPLETENESS OF ELECTRONIC COPIES OF THIS PLAN SHEET.

Caltrans Metric

TDS No.	FOR MORE INFORMATION SEE SHEET		
⬡	D-	DD-	ECD-
T-6	25	1,20, 21, 24	-

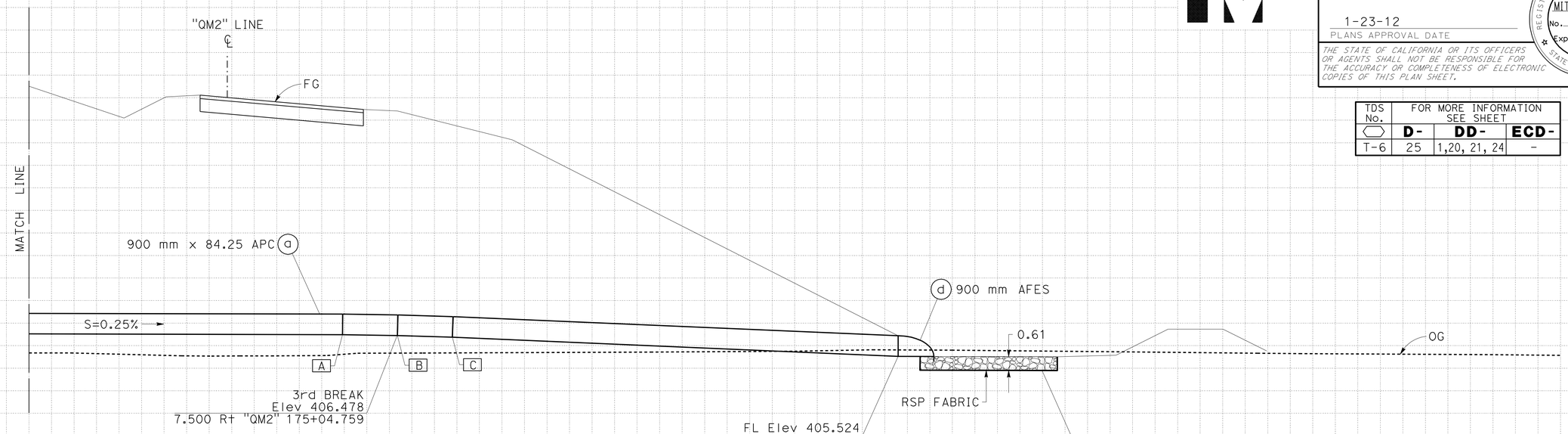

TEMPORARY DRAINAGE SYSTEM T-6

"NW1"175+05.000
NO SKEW

CAMBER DESIGN TABLE

	1st BREAK					2nd BREAK			
☐	STATION	OFFSET	Elev	GAP	☐	STATION	OFFSET	Elev	GAP
A	"NW1" 175+05.000	18.249Lt	406.485	12.5 mm	A	"QM2" 175+04.468	5.078Rt	406.485	12.3 mm
B	"NW1" 175+05.000	15.811Lt	406.545	12.5 mm	B	"QM2" 175+04.759	7.499Rt	406.446	12.3 mm
C	"NW1" 175+05.000	13.373Lt	406.573	12.5 mm	C	"QM2" 175+05.054	9.920Rt	406.374	12.3 mm

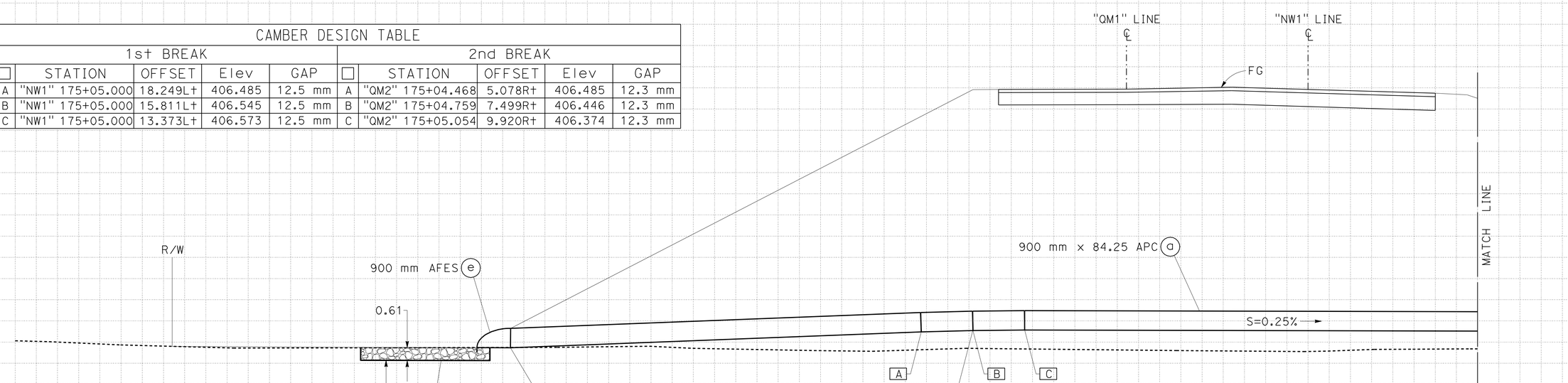

APPROVED FOR DRAINAGE WORK ONLY.

ALL DIMENSIONS ARE IN METERS
UNLESS OTHERWISE SHOWN

DRAINAGE DETAILS

SCALE: Horiz 1:100
Vert 1:100

DD-32

GMA	05-31-11	REVISED BY / DATE REVISED
KAO THAO	SCOTT FOSTER	CALCULATED-DESIGNED BY / CHECKED BY
DOUGLAS S. JONES		FUNCTIONAL SUPERVISOR

STATE OF CALIFORNIA - DEPARTMENT OF TRANSPORTATION
Caltrans 03-DESIGN EAST

LAST REVISION 08-11-11 DATE PLOTTED => 28-JAN-2012 TIME PLOTTED => 07:03

Dist	COUNTY	ROUTE	KILOMETER POST TOTAL PROJECT	SHEET No.	TOTAL SHEETS
01	Men	101	R69.4/R78.9	366	939

Mitch Andrus 9-22-11
REGISTERED CIVIL ENGINEER DATE

1-23-12
PLANS APPROVAL DATE

REGISTERED PROFESSIONAL ENGINEER MITCH ANDRUS No. C48753 Exp. 9-30-12 CIVIL STATE OF CALIFORNIA

THE STATE OF CALIFORNIA OR ITS OFFICERS OR AGENTS SHALL NOT BE RESPONSIBLE FOR THE ACCURACY OR COMPLETENESS OF ELECTRONIC COPIES OF THIS PLAN SHEET.

Caltrans Metric

TDS No.	FOR MORE INFORMATION SEE SHEET		
⬡	D-	DD-	ECD-
T-7	25	1,20, 21, 24	-

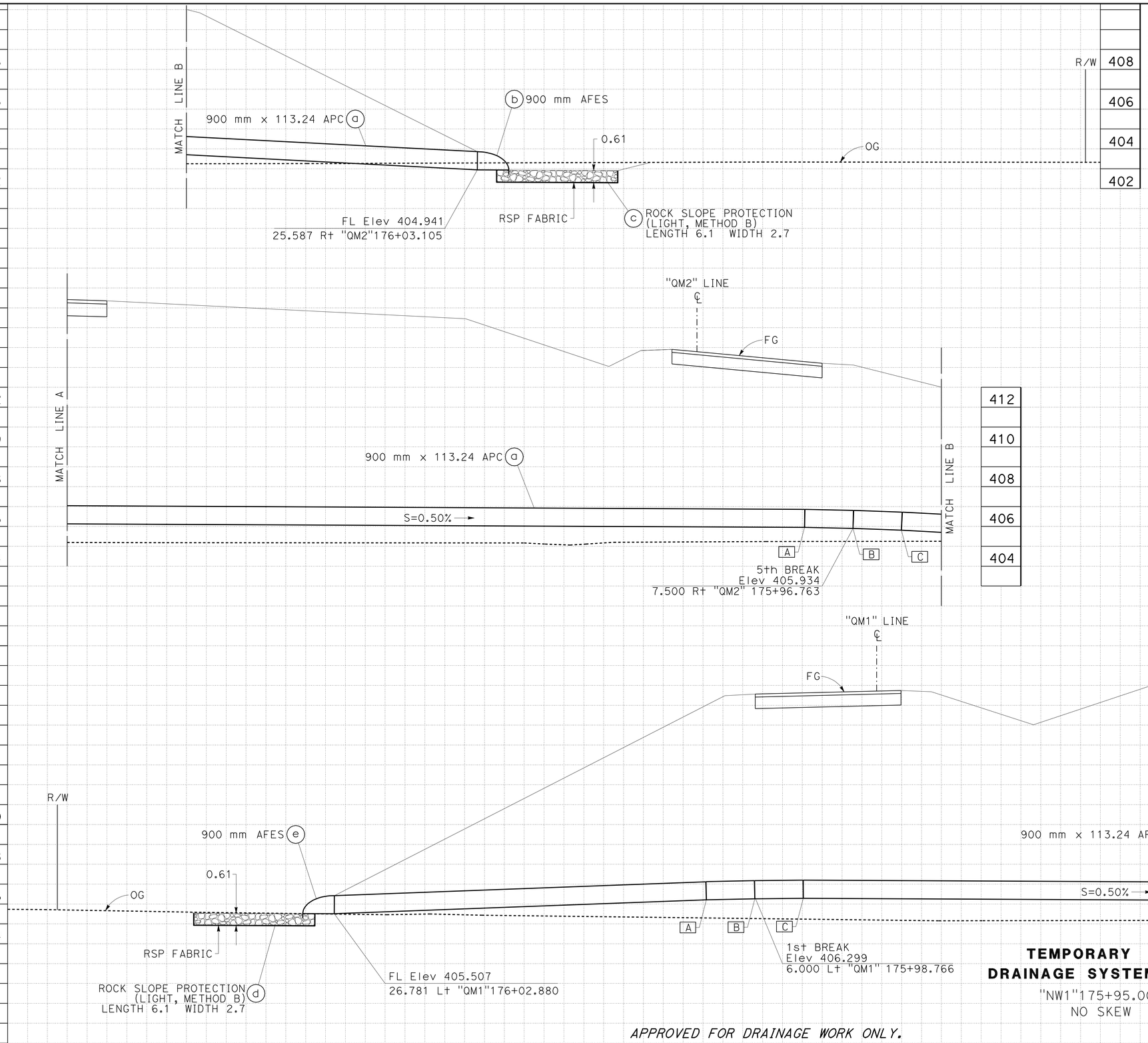

CAMBER DESIGN TABLE 1st BREAK				
☐	STATION	OFFSET	Elev	GAP
A	"QM1" 175+99.243	3.626Lt	406.206	12.9 mm
B	"QM1" 175+98.770	6.018Lt	406.262	12.9 mm
C	"QM1" 175+98.296	8.409Lt	406.284	12.9 mm

2nd BREAK				
☐	STATION	OFFSET	Elev	GAP
A	"QM2" 175+95.994	5.158Rt	405.947	14.3 mm
B	"QM2" 175+96.756	7.478Rt	405.896	14.3 mm
C	"QM2" 175+97.529	9.796Rt	405.807	14.3 mm

TEMPORARY DRAINAGE SYSTEM (T-7)

"NW1"175+95.000
NO SKEW

ALL DIMENSIONS ARE IN METERS UNLESS OTHERWISE SHOWN

DRAINAGE DETAILS

SCALE: Horiz 1:100
Vert 1:100

APPROVED FOR DRAINAGE WORK ONLY.

DD-33

REVISED BY	DATE REVISED
GMA	05-31-11

CALCULATED-DESIGNED BY: KAO THAO
CHECKED BY: SCOTT FOSTER
FUNCTIONAL SUPERVISOR: DOUGLAS S. JONES

STATE OF CALIFORNIA - DEPARTMENT OF TRANSPORTATION
Caltrans 03-DESIGN EAST

LAST REVISION 08-12-11
DATE PLOTTED => 28-JAN-2012
TIME PLOTTED => 07:03

Dist	COUNTY	ROUTE	KILOMETER POST TOTAL PROJECT	SHEET No.	TOTAL SHEETS
01	Men	101	R69.4/R78.9	367	939

Mitch Andrus 9-22-11
REGISTERED CIVIL ENGINEER DATE

1-23-12
PLANS APPROVAL DATE

REGISTERED PROFESSIONAL ENGINEER MITCH ANDRUS No. C48753 Exp. 9-30-12 CIVIL STATE OF CALIFORNIA

THE STATE OF CALIFORNIA OR ITS OFFICERS OR AGENTS SHALL NOT BE RESPONSIBLE FOR THE ACCURACY OR COMPLETENESS OF ELECTRONIC COPIES OF THIS PLAN SHEET.

Caltrans Metric

TDS No.	FOR MORE INFORMATION SEE SHEET		
⬡	D-	DD-	ECD-
T-8	29	1,20, 21, 25	-

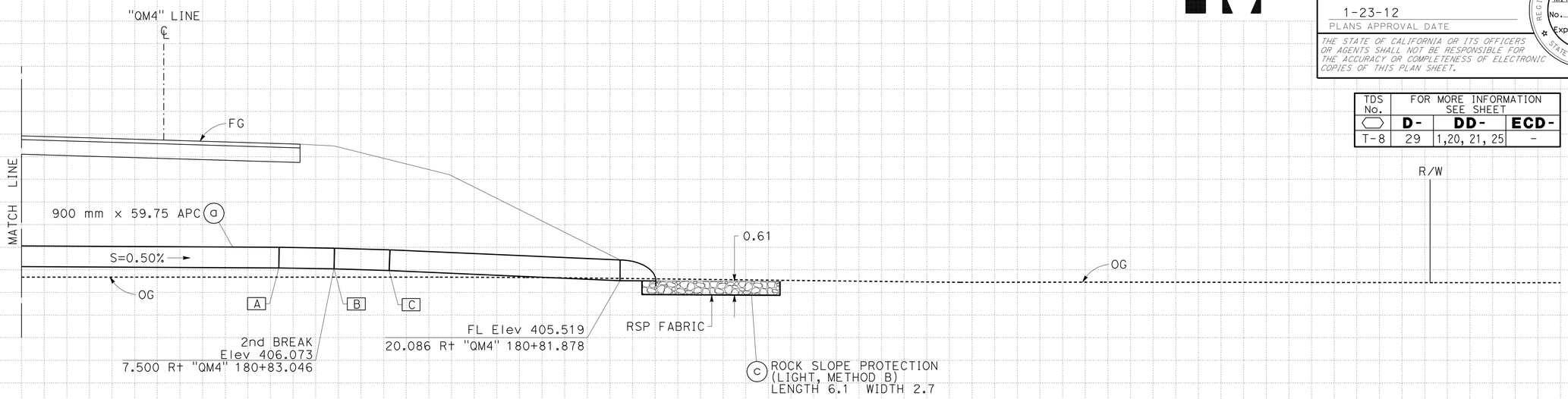

CAMBER DESIGN TABLE

	1st BREAK					2nd BREAK			
☐	STATION	OFFSET	Elev	GAP	☐	STATION	OFFSET	Elev	GAP
A	"QM3" 180+81.400	9.992L+	406.153	13.9 mm	A	"QM4" 180+83.260	5.071R+	406.086	11.9 mm
B	"QM3" 180+81.637	7.566L+	406.215	13.9 mm	B	"QM4" 180+83.046	7.500R+	406.042	11.9 mm
C	"QM3" 180+81.874	5.141L+	406.240	13.9 mm	C	"QM4" 180+82.829	9.928R+	405.966	11.9 mm

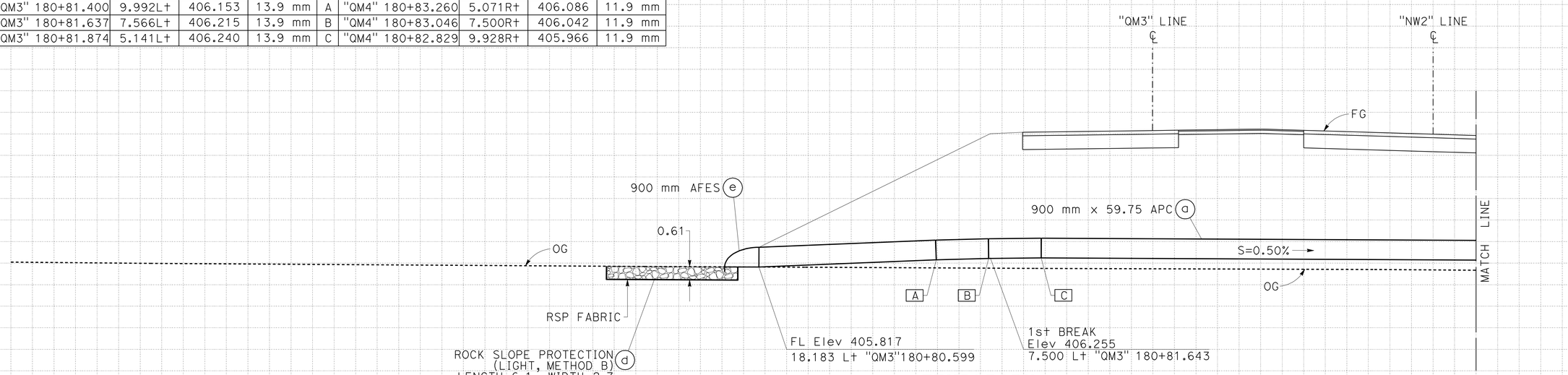

TEMPORARY DRAINAGE SYSTEM (T-8)

"NW2"180+85.000
NO SKEW

APPROVED FOR DRAINAGE WORK ONLY.

ALL DIMENSIONS ARE IN METERS
UNLESS OTHERWISE SHOWN

DRAINAGE DETAILS

SCALE: Horiz 1:100
Vert 1:100

DD-34

REVISED BY	DATE REVISED
GMA	05-31-11

CALCULATED-DESIGNED BY: KAO THAO
CHECKED BY: SCOTT FOSTER
FUNCTIONAL SUPERVISOR: DOUGLAS S. JONES

STATE OF CALIFORNIA - DEPARTMENT OF TRANSPORTATION
Caltrans 03-DESIGN EAST

LAST REVISION 08-12-11
DATE PLOTTED => 28-JAN-2012
TIME PLOTTED => 07:03

Dist	COUNTY	ROUTE	KILOMETER POST TOTAL PROJECT	SHEET No.	TOTAL SHEETS
01	Men	101	R69.4/R78.9	368	939

Mitch Andrus 9-22-11
REGISTERED CIVIL ENGINEER DATE

1-23-12
PLANS APPROVAL DATE

REGISTERED PROFESSIONAL ENGINEER MITCH ANDRUS No. C48753 Exp. 9-30-12 CIVIL STATE OF CALIFORNIA

THE STATE OF CALIFORNIA OR ITS OFFICERS OR AGENTS SHALL NOT BE RESPONSIBLE FOR THE ACCURACY OR COMPLETENESS OF ELECTRONIC COPIES OF THIS PLAN SHEET.

Caltrans Metric

TDS No.	FOR MORE INFORMATION SEE SHEET		
⬡	D-	DD-	ECD-
T-9	29	1,20, 21, 25	-

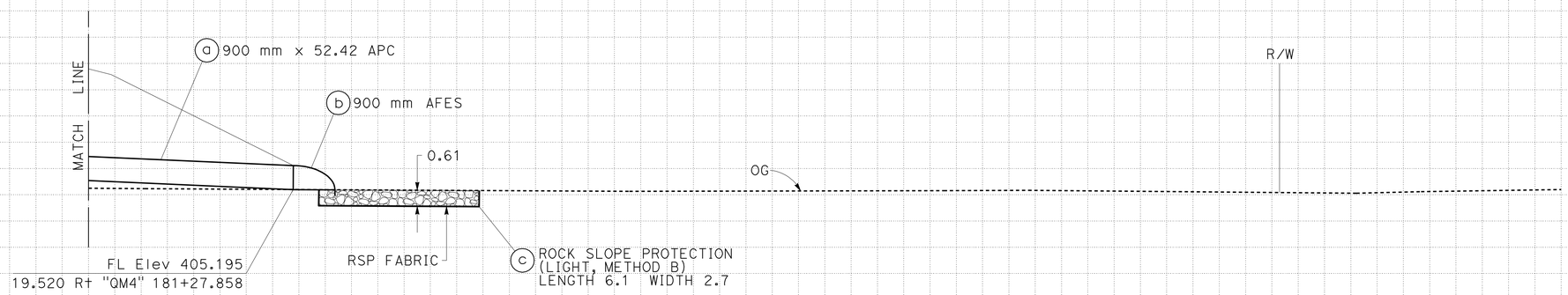

CAMBER DESIGN TABLE

	1st BREAK					2nd BREAK			
☐	STATION	OFFSET	Elev	GAP	☐	STATION	OFFSET	Elev	GAP
A	"NW2" 181+30.000	15.091Lt	405.795	10.5 mm	A	"NW2" 181+30.000	11.320Rt	405.746	12.1 mm
B	"NW2" 181+30.000	12.653Lt	405.838	10.5 mm	B	"NW2" 181+30.000	13.758Rt	405.702	12.1 mm
C	"NW2" 181+30.000	10.214Lt	405.854	10.5 mm	C	"NW2" 181+30.000	16.195Rt	405.625	12.1 mm

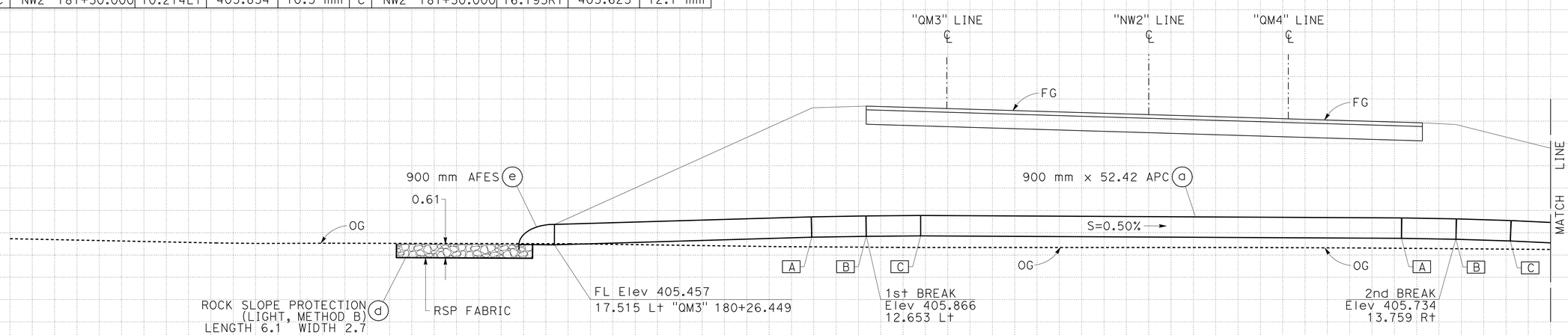

TEMPORARY DRAINAGE SYSTEM ⬡ T-9

"NW2"181+30.000
NO SKEW

ALL DIMENSIONS ARE IN METERS UNLESS OTHERWISE SHOWN

DRAINAGE DETAILS

SCALE: Horiz 1:100
Vert 1:100

APPROVED FOR DRAINAGE WORK ONLY.

DD-35

REVISED BY: GMA — DATE REVISED: 05-31-11
CALCULATED-DESIGNED BY: KAO THAO — CHECKED BY: SCOTT FOSTER
FUNCTIONAL SUPERVISOR: DOUGLAS S. JONES

STATE OF CALIFORNIA - DEPARTMENT OF TRANSPORTATION
Caltrans 03-DESIGN EAST

LAST REVISION 08-12-11 — DATE PLOTTED => 28-JAN-2012 — TIME PLOTTED => 07:03

Dist	COUNTY	ROUTE	KILOMETER POST TOTAL PROJECT	SHEET No.	TOTAL SHEETS
01	Men	101	R69.4/R78.9	369	939

Caltrans Metric

Mitch Andrus 9-22-11
REGISTERED CIVIL ENGINEER DATE

1-23-12
PLANS APPROVAL DATE

REGISTERED PROFESSIONAL ENGINEER MITCH ANDRUS No. C48753 Exp. 9-30-12 CIVIL STATE OF CALIFORNIA

THE STATE OF CALIFORNIA OR ITS OFFICERS OR AGENTS SHALL NOT BE RESPONSIBLE FOR THE ACCURACY OR COMPLETENESS OF ELECTRONIC COPIES OF THIS PLAN SHEET.

TDS No.	FOR MORE INFORMATION SEE SHEET		
⬡	D-	DD-	ECD-
T-10	31	1,20, 21, 26	-

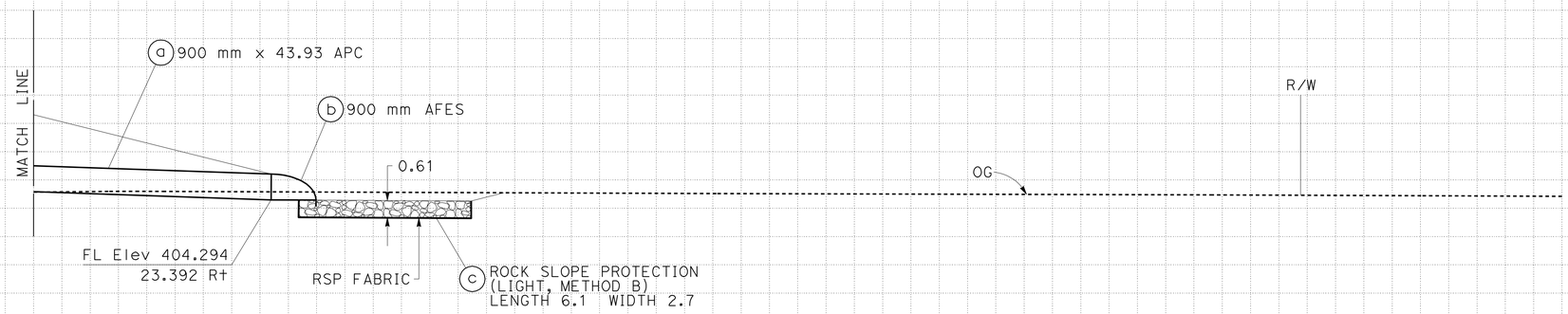

CAMBER DESIGN TABLE

	1st BREAK					2nd BREAK			
☐	STATION	OFFSET	Elev	GAP	☐	STATION	OFFSET	Elev	GAP
A	"NW2" 183+70.000	8.438Lt	404.757	7.6 mm	A	"NW2" 183+70.000	8.662Rt	404.733	9.0 mm
B	"NW2" 183+70.000	6.000Lt	404.786	7.6 mm	B	"NW2" 183+70.000	11.100Rt	404.697	9.0 mm
C	"NW2" 183+70.000	3.561Lt	404.794	7.6 mm	C	"NW2" 183+70.000	13.537Rt	404.636	9.0 mm

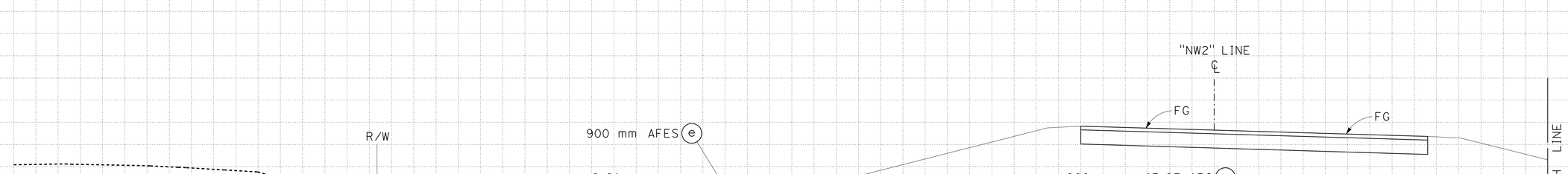

TEMPORARY DRAINAGE SYSTEM T-10

"NW2"183+70.000
NO SKEW

ALL DIMENSIONS ARE IN METERS UNLESS OTHERWISE SHOWN

DRAINAGE DETAILS

SCALE: Horiz 1:100
Vert 1:100

APPROVED FOR DRAINAGE WORK ONLY.

DD-36

GMA	05-31-11
REVISED BY	DATE REVISED
KAO THAO	SCOTT FOSTER
CALCULATED-DESIGNED BY	CHECKED BY
FUNCTIONAL SUPERVISOR	DOUGLAS S. JONES

STATE OF CALIFORNIA - DEPARTMENT OF TRANSPORTATION
Caltrans 03-DESIGN EAST

LAST REVISION 08-12-11 DATE PLOTTED => 28-JAN-2012 TIME PLOTTED => 07:03

Dist	COUNTY	ROUTE	KILOMETER POST TOTAL PROJECT	SHEET No.	TOTAL SHEETS
01	Men	101	R69.4/R78.9	370	939

Mitch Andrus 9-22-11
REGISTERED CIVIL ENGINEER DATE

1-23-12
PLANS APPROVAL DATE

REGISTERED PROFESSIONAL ENGINEER MITCH ANDRUS No. C48753 Exp. 9-30-12 CIVIL STATE OF CALIFORNIA

THE STATE OF CALIFORNIA OR ITS OFFICERS OR AGENTS SHALL NOT BE RESPONSIBLE FOR THE ACCURACY OR COMPLETENESS OF ELECTRONIC COPIES OF THIS PLAN SHEET.

Caltrans Metric

BASIN CONTOUR GRADING TABLE			
☐	STATION	OFFSET	Elev
1	"U1"101+04.464	22.510 Lt	465.500
2	"U1"101+00.480	16.840 Lt	465.500
3	"U1"101+02.269	15.144 Lt	465.500
4	"U1"101+15.553	21.981 Lt	465.500
5	"U1"101+19.993	14.513 Lt	465.500

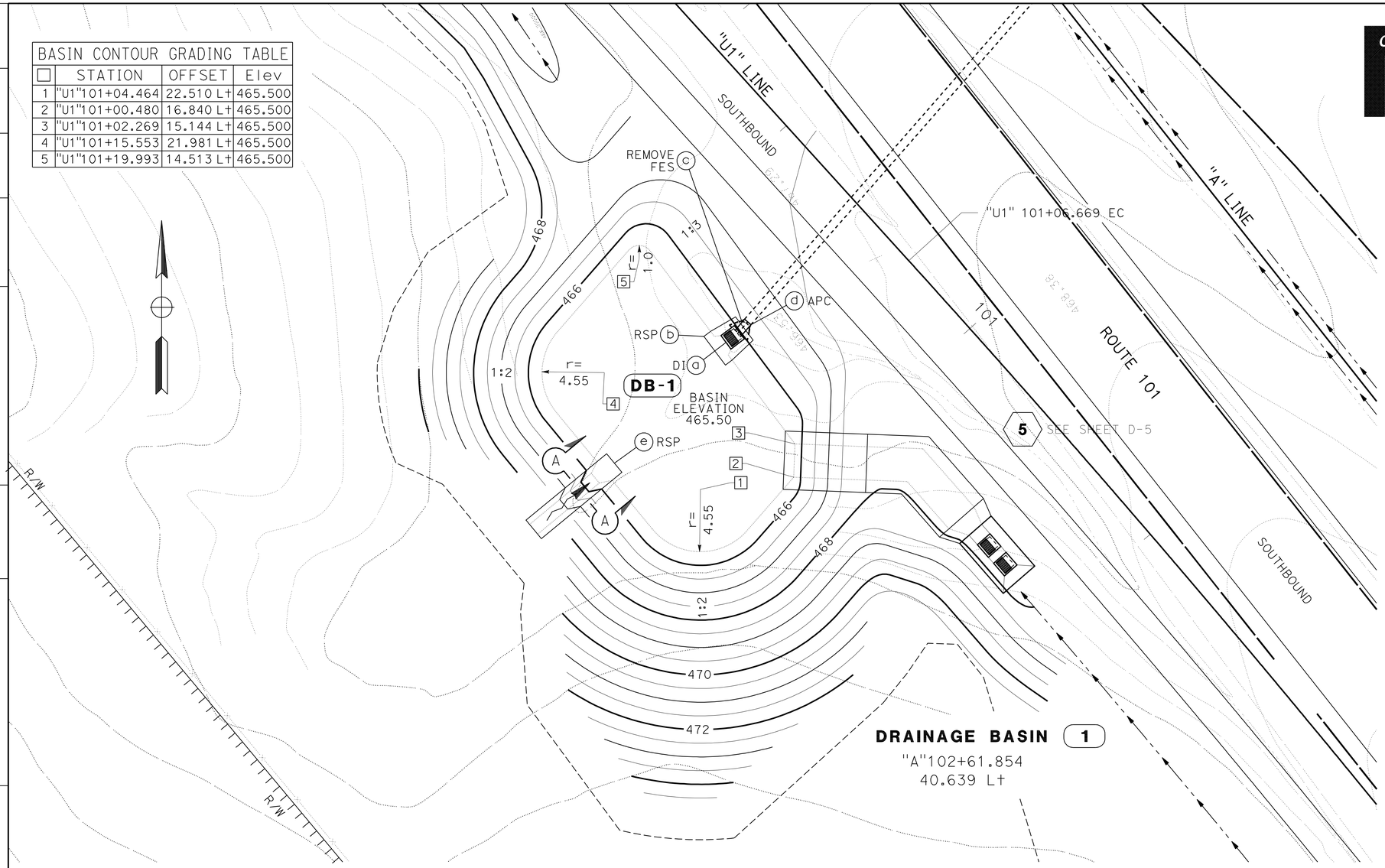

APPROVED FOR DRAINAGE WORK ONLY.

RSP DETAIL				
DRAINAGE BASIN No.	DRAINAGE UNIT	RSP DIMENSIONS		
		DEPTH	AREA	VOLUME
		m	m^2	m^3
1	b	0.46	5.10	2.3
1	d	0.46	15.49	7.1

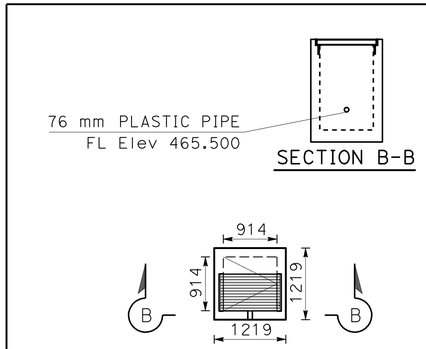

SECTION B-B

DETAIL DB-1 a

TYPE G2-DI
(DIMENSIONS IN MILLIMETERS)
FOR DETAILS NOT SHOWN, SEE STANDARD PLAN D73
No Scale

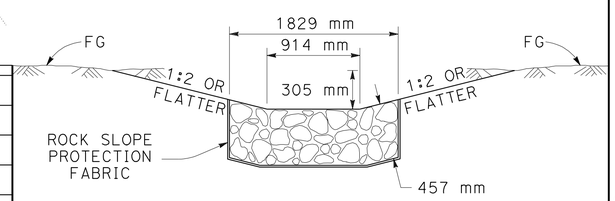

SECTION A-A

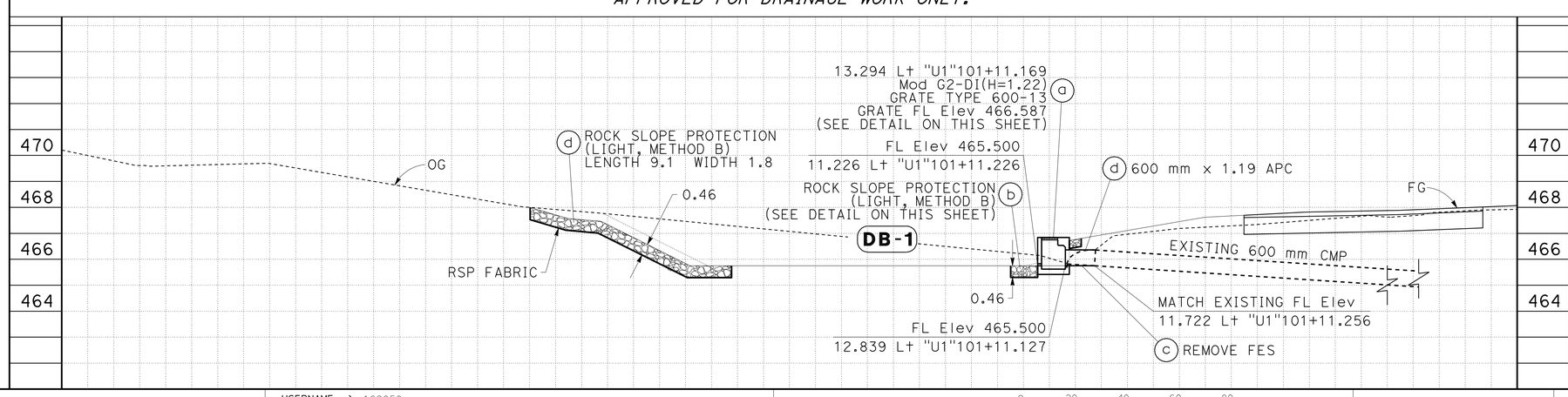

ALL DIMENSIONS ARE IN METERS UNLESS OTHERWISE SHOWN.

DRAINAGE DETAILS

NO SCALE

DD-37

STATE OF CALIFORNIA - DEPARTMENT OF TRANSPORTATION
Caltrans 03-DESIGN EAST

FUNCTIONAL SUPERVISOR: DOUGLAS S. JONES
CALCULATED-DESIGNED BY: SCOTT FOSTER
CHECKED BY: KAO THAO
REVISED BY: MGA
DATE REVISED: 05-30-11

LAST REVISION 08-12-11
DATE PLOTTED => 28-JAN-2012
TIME PLOTTED => 07:03

Dist	COUNTY	ROUTE	KILOMETER POST TOTAL PROJECT	SHEET No.	TOTAL SHEETS
01	Men	101	R69.4/R78.9	371	939

Mitch Andrus 9-22-11
REGISTERED CIVIL ENGINEER DATE

1-23-12
PLANS APPROVAL DATE

REGISTERED PROFESSIONAL ENGINEER MITCH ANDRUS No. C48753 Exp. 9-30-12 CIVIL STATE OF CALIFORNIA

THE STATE OF CALIFORNIA OR ITS OFFICERS OR AGENTS SHALL NOT BE RESPONSIBLE FOR THE ACCURACY OR COMPLETENESS OF ELECTRONIC COPIES OF THIS PLAN SHEET.

Caltrans Metric

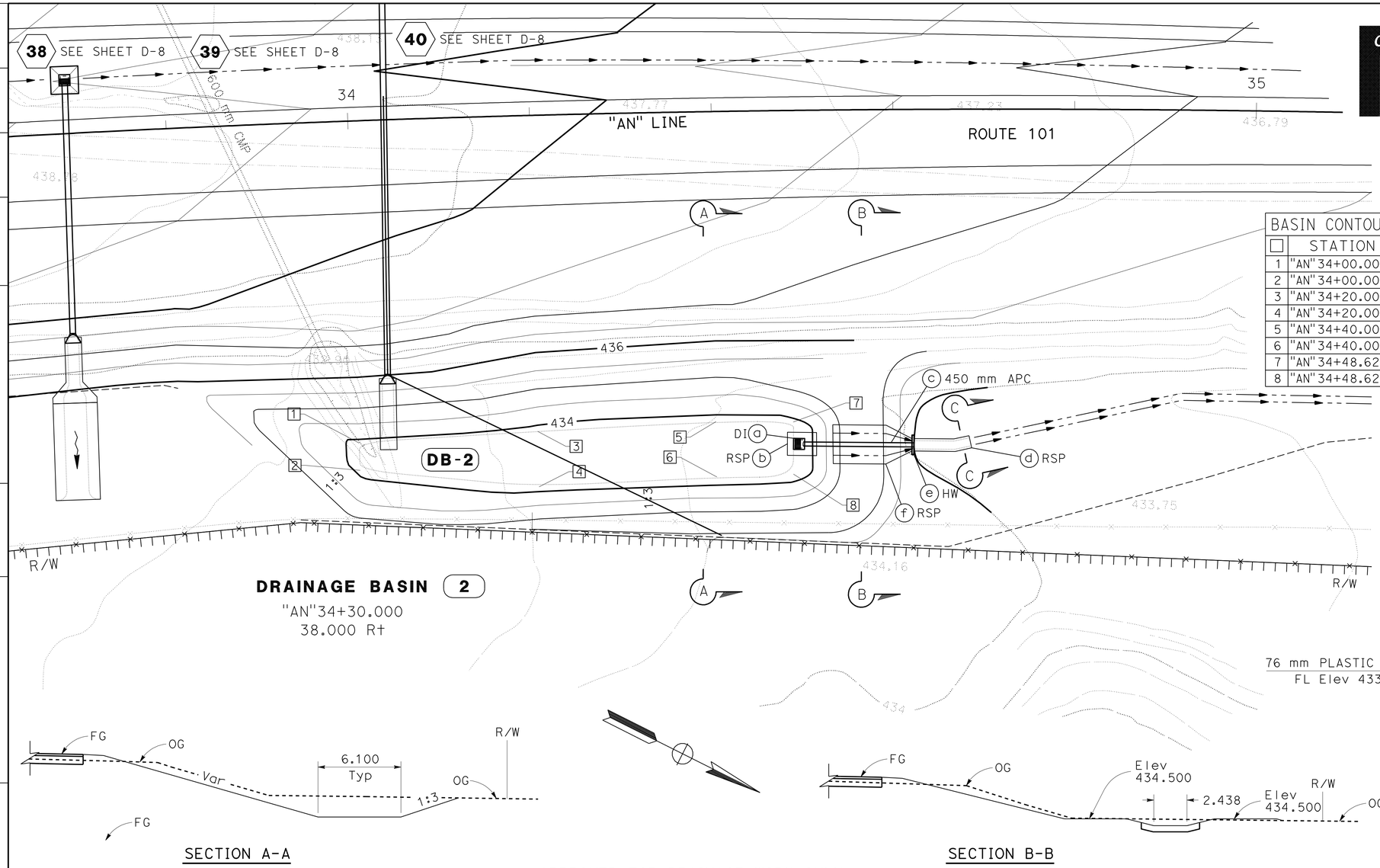

BASIN CONTOUR GRADING TABLE

☐	STATION	OFFSET	Elev
1	"AN"34+00.000	36.140 R†	433.876
2	"AN"34+00.000	39.697 R†	433.876
3	"AN"34+20.000	42.140 R†	433.826
4	"AN"34+20.000	34.963 R†	433.826
5	"AN"34+40.000	41.060 R†	433.776
6	"AN"34+40.000	42.140 R†	433.776
7	"AN"34+48.625	34.963 R†	433.750
8	"AN"34+48.625	41.060 R†	433.750

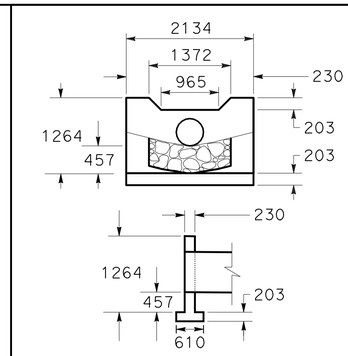

DETAIL DB-2 e

MODIFIED PIPE HEADWALL
(DIMENSIONS IN MILLIMETERS)
FOR DETAILS NOT SHOWN,
SEE STANDARD PLAN D89
NO SCALE

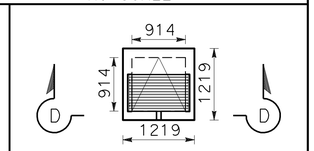

DETAIL DB-2 a

TYPE G2-DI
(DIMENSIONS IN MILLIMETERS)
FOR DETAILS NOT SHOWN,
SEE STANDARD PLAN D73
NO SCALE

APPROVED FOR DRAINAGE WORK ONLY.

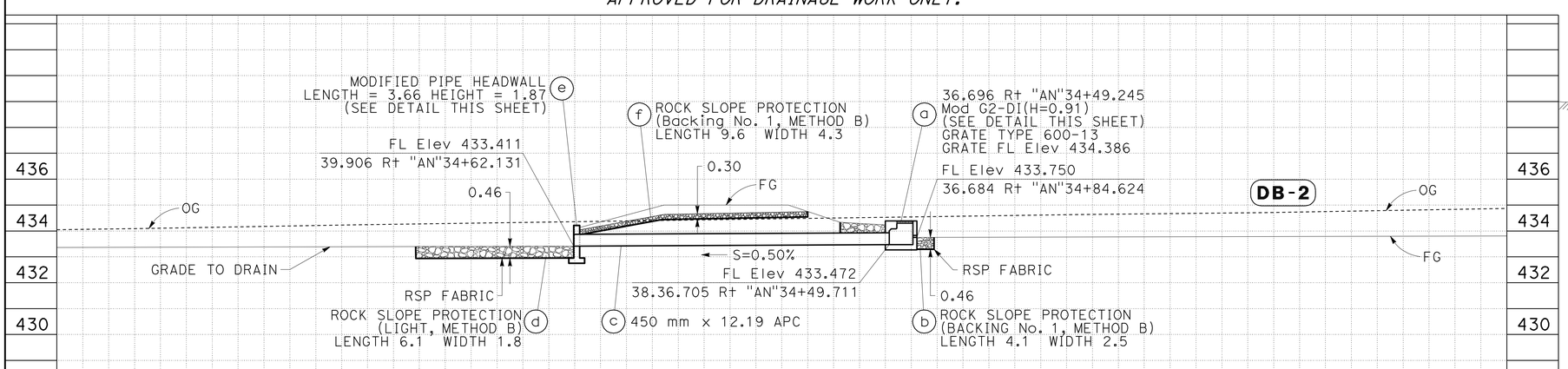

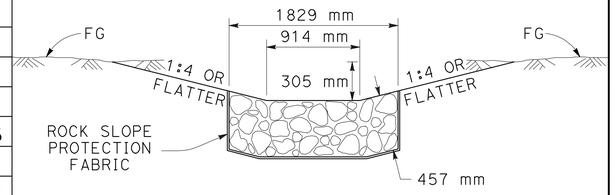

SECTION C-C

ALL DIMENSIONS ARE IN METERS
UNLESS OTHERWISE SHOWN.

DRAINAGE DETAILS

NO SCALE

DD-38

REVISED BY	DATE REVISED
MGA	05-30-11

CALCULATED-DESIGNED BY: SCOTT FOSTER
CHECKED BY: KAO THAO
FUNCTIONAL SUPERVISOR: DOUGLAS S. JONES

STATE OF CALIFORNIA - DEPARTMENT OF TRANSPORTATION
Caltrans 03-DESIGN EAST

LAST REVISION 08-12-11 DATE PLOTTED => 28-JAN-2012 TIME PLOTTED => 07:04

Dist	COUNTY	ROUTE	KILOMETER POST TOTAL PROJECT	SHEET No.	TOTAL SHEETS
01	Men	101	R69.4/R78.9	372	939

Mitch Andrus 9-22-11
REGISTERED CIVIL ENGINEER DATE

1-23-12
PLANS APPROVAL DATE

REGISTERED PROFESSIONAL ENGINEER MITCH ANDRUS No. C48753 Exp. 9-30-12 CIVIL STATE OF CALIFORNIA

THE STATE OF CALIFORNIA OR ITS OFFICERS OR AGENTS SHALL NOT BE RESPONSIBLE FOR THE ACCURACY OR COMPLETENESS OF ELECTRONIC COPIES OF THIS PLAN SHEET.

Caltrans Metric

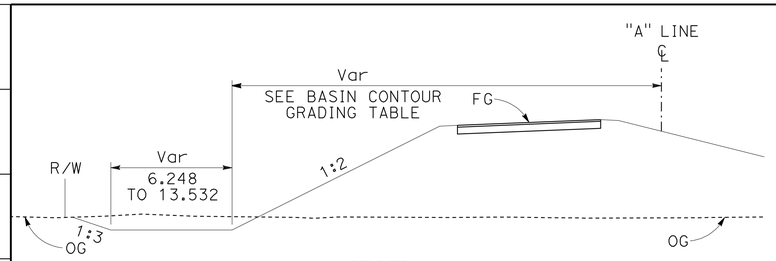

SECTION A-A

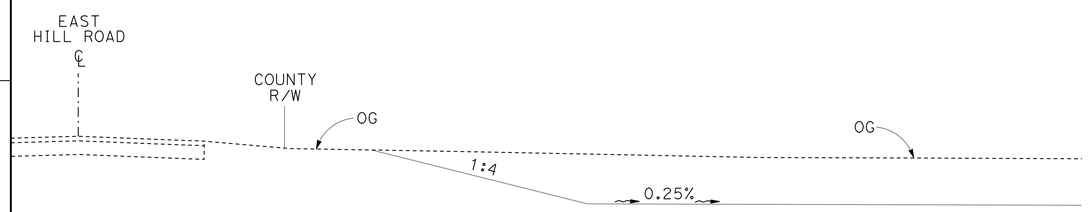

SECTION B-B
(FOR DETAIL NOT SHOWN SEE BASIN CONTOUR GRADING TABLE)

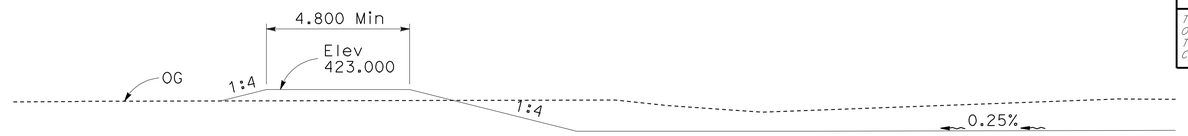

SECTION C-C
(FOR DETAIL NOT SHOWN SEE BASIN CONTOUR GRADING TABLE)

RSP DETAIL				
DRAINAGE BASIN No.	DRAINAGE UNIT	RSP DIMENSIONS		
		DEPTH	AREA	VOLUME
		m	m^2	m^3
3	b	0.91	32.589	29.8

BASIN CONTOUR GRADING TABLE			
☐	STATION	OFFSET	Elev
1	"A" 126+13.216	38.354 Lt	422.115
2	"A" 126+13.216	44.490 Lt	422.115
3	"A" 126+20.000	38.110 Lt	422.098
4	"A" 126+20.000	44.496 Lt	422.098
5	"A" 126+40.000	37.806 Lt	422.048
6	"A" 126+40.000	44.692 Lt	422.048
7	"A" 126+60.000	37.444 Lt	421.998
8	"A" 126+60.000	44.838 Lt	421.998
9	"A" 126+80.000	36.544 Lt	421.948
10	"A" 126+80.000	45.625 Lt	421.948
11	"A" 127+00.000	36.544 Lt	421.898
12	"A" 127+00.000	45.801 Lt	421.898
13	"A" 127+20.000	36.005 Lt	421.848
14	"A" 127+20.000	46.384 Lt	421.848
15	"A" 127+40.000	35.408 Lt	421.798
16	"A" 127+40.000	46.564 Lt	421.798
17	"A" 127+60.000	34.753 Lt	421.748
18	"A" 127+60.000	46.856 Lt	421.748
19	"A" 127+80.000	34.039 Lt	421.698
20	"A" 127+80.000	46.305 Lt	421.698
21	"A" 128+00.000	33.266 Lt	421.648
22	"A" 128+00.000	48.240 Lt	421.648
23	"A" 128+20.000	32.430 Lt	421.600
24	"A" 128+20.000	45.961 Lt	421.600
25	"A" 128+25.000	42.361 Lt	421.600
26	"A" 128+25.000	45.961 Lt	421.600

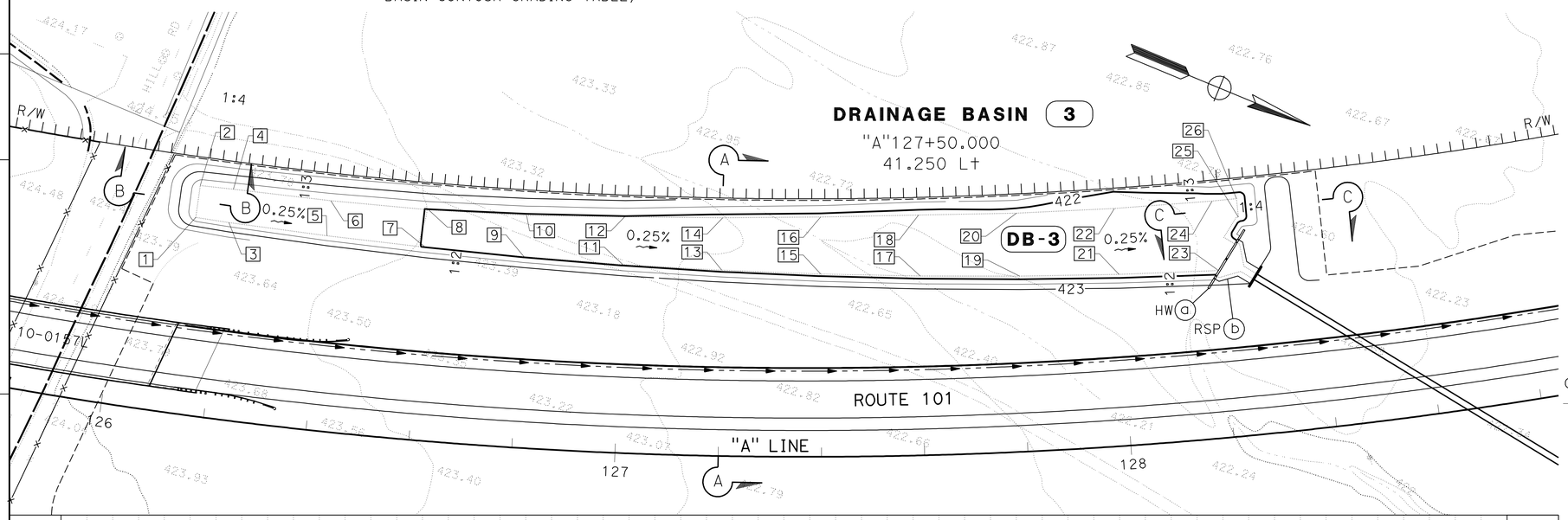

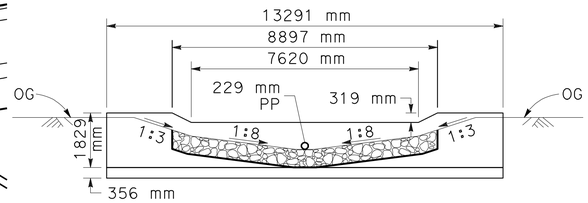

SECTION D-D

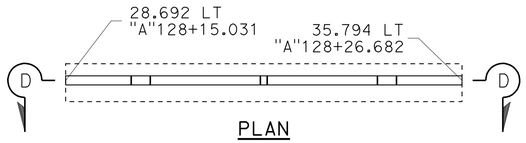

PLAN

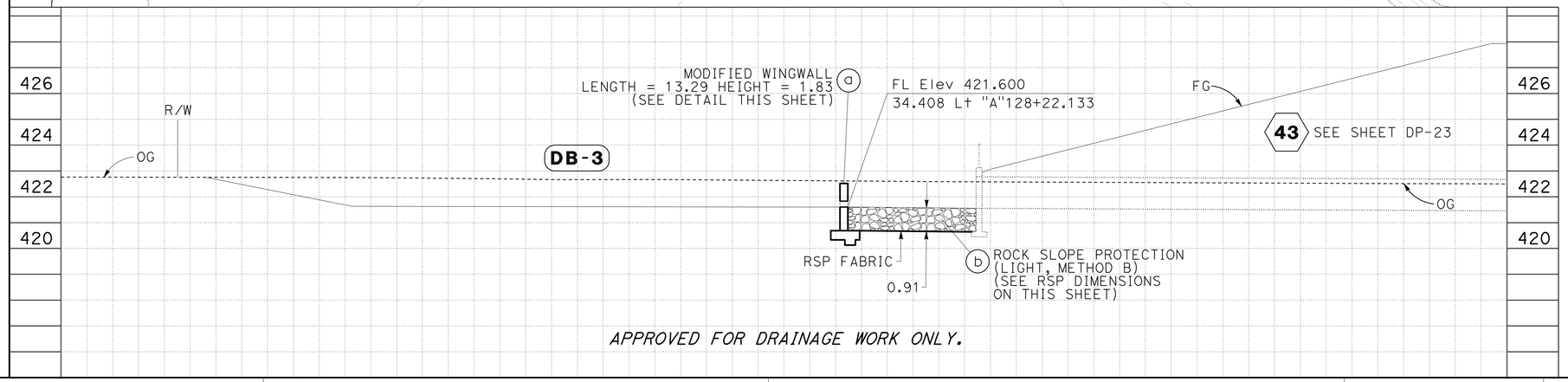

APPROVED FOR DRAINAGE WORK ONLY.

Mod HEADWALL DETAIL
NO SCALE
(FOR DETAIL NOT SHOWN SEE Std PLAN D90)

ALL DIMENSIONS ARE IN METERS
UNLESS OTHERWISE SHOWN.

DRAINAGE DETAILS

NO SCALE

DD-39

MGA	05-30-11	REVISED BY	DATE REVISED
SCOTT FOSTER	KAO THAO		
CALCULATED-DESIGNED BY	CHECKED BY		
FUNCTIONAL SUPERVISOR	DOUGLAS S. JONES		

STATE OF CALIFORNIA - DEPARTMENT OF TRANSPORTATION
Caltrans 03-DESIGN EAST

LAST REVISION 08-12-11 DATE PLOTTED => 28-JAN-2012 TIME PLOTTED => 07:04

Dist	COUNTY	ROUTE	KILOMETER POST TOTAL PROJECT	SHEET No.	TOTAL SHEETS
01	Men	101	R69.4/R78.9	373	939

Mitch Andrus 9-22-11
REGISTERED CIVIL ENGINEER DATE

1-23-12
PLANS APPROVAL DATE

REGISTERED PROFESSIONAL ENGINEER MITCH ANDRUS No. C48753 Exp. 9-30-12 CIVIL STATE OF CALIFORNIA

THE STATE OF CALIFORNIA OR ITS OFFICERS OR AGENTS SHALL NOT BE RESPONSIBLE FOR THE ACCURACY OR COMPLETENESS OF ELECTRONIC COPIES OF THIS PLAN SHEET.

Caltrans Metric

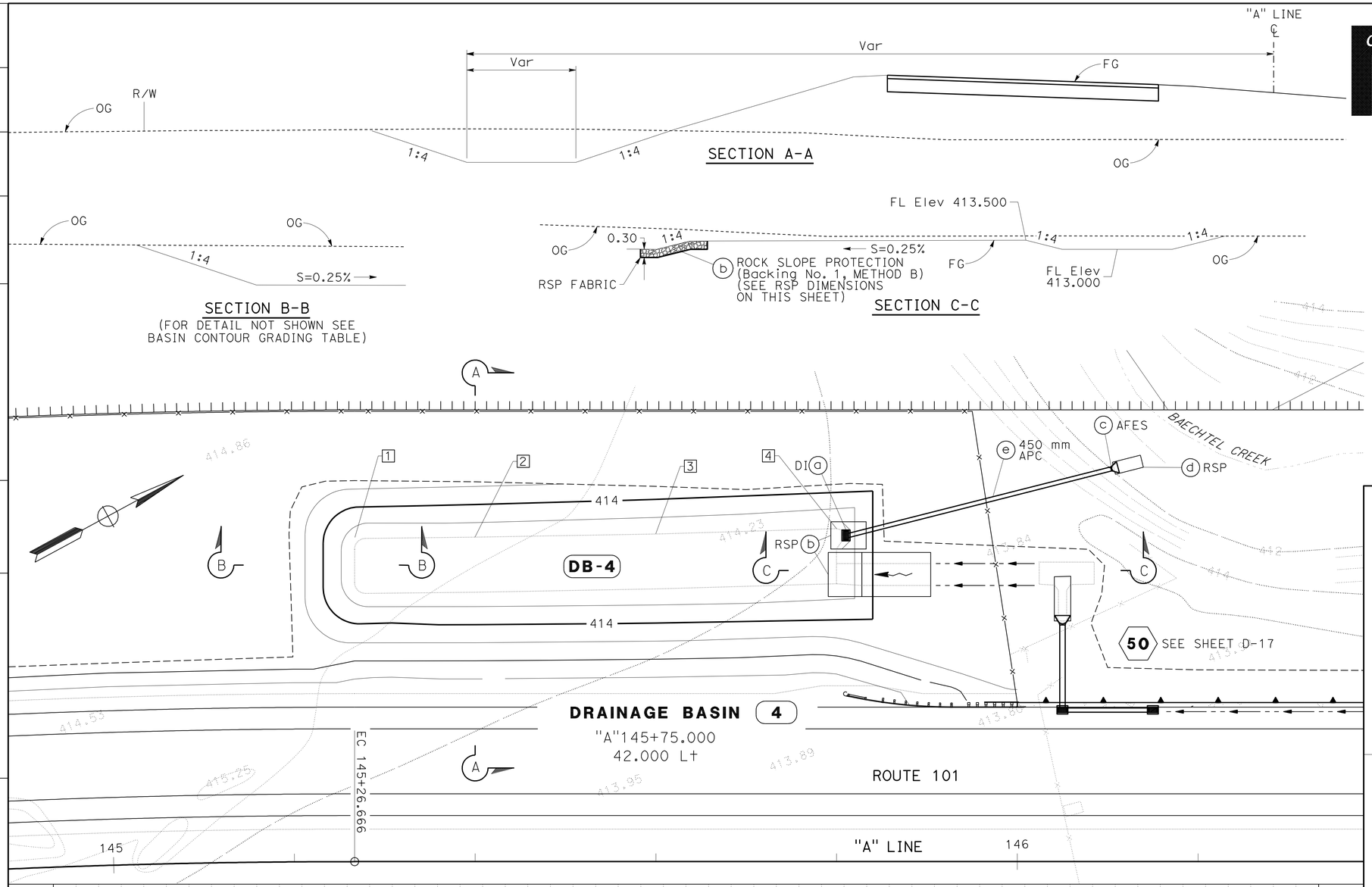

BASIN CONTOUR GRADING TABLE			
☐	STATION	OFFSET	Elev
1	"A" 145+26.666	35.768 Lt	413.133
2	"A" 145+40.000	35.913 Lt	413.100
3	"A" 145+60.000	36.288 Lt	413.050
4	"A" 145+80.000	36.850 Lt	413.000

RSP DETAIL				
DRAINAGE BASIN No.	DRAINAGE UNIT	RSP DIMENSIONS		
		DEPTH	AREA	VOLUME
		m	m^2	m^3
5	b	0.30	28.92	8.8
	d	0.46	4.39	2.0

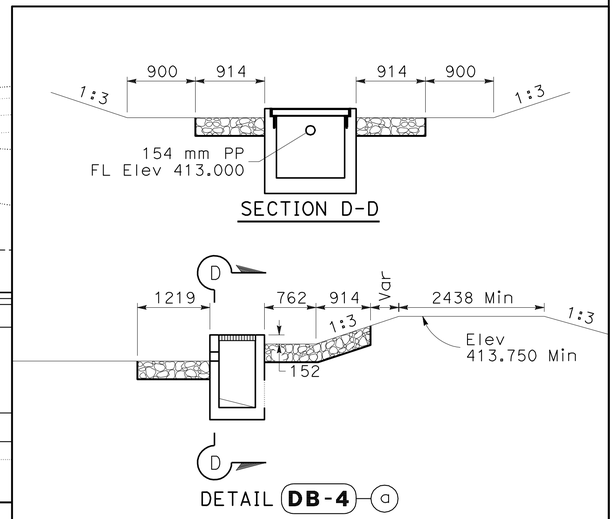

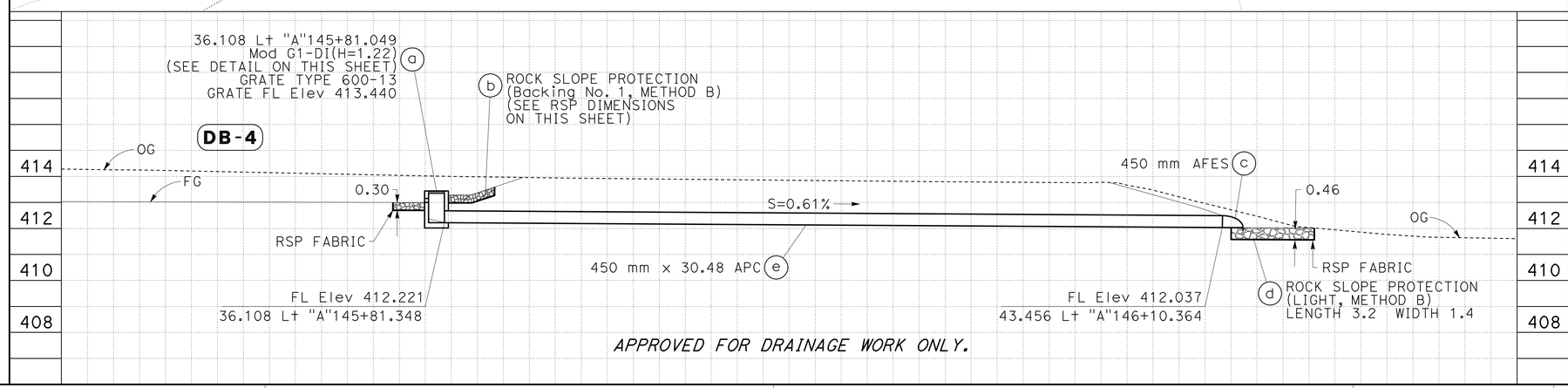

ALL DIMENSIONS ARE IN METERS UNLESS OTHERWISE SHOWN.

DRAINAGE DETAILS

NO SCALE

DD-40

REVISED BY	DATE REVISED
MGA	05-30-11

CALCULATED-DESIGNED BY	CHECKED BY
SCOTT FOSTER	KAO THAO

FUNCTIONAL SUPERVISOR: DOUGLAS S. JONES

STATE OF CALIFORNIA - DEPARTMENT OF TRANSPORTATION
Caltrans 03-DESIGN EAST

LAST REVISION 08-12-11 DATE PLOTTED => 28-JAN-2012 TIME PLOTTED => 07:04

Dist	COUNTY	ROUTE	KILOMETER POST TOTAL PROJECT	SHEET No.	TOTAL SHEETS
01	Men	101	R69.4/R78.9	374	939

Mitch Andrus 9-22-11
REGISTERED CIVIL ENGINEER DATE

1-23-12
PLANS APPROVAL DATE

REGISTERED PROFESSIONAL ENGINEER MITCH ANDRUS No. C48753 Exp. 9-30-12 CIVIL STATE OF CALIFORNIA

THE STATE OF CALIFORNIA OR ITS OFFICERS OR AGENTS SHALL NOT BE RESPONSIBLE FOR THE ACCURACY OR COMPLETENESS OF ELECTRONIC COPIES OF THIS PLAN SHEET.

Caltrans Metric

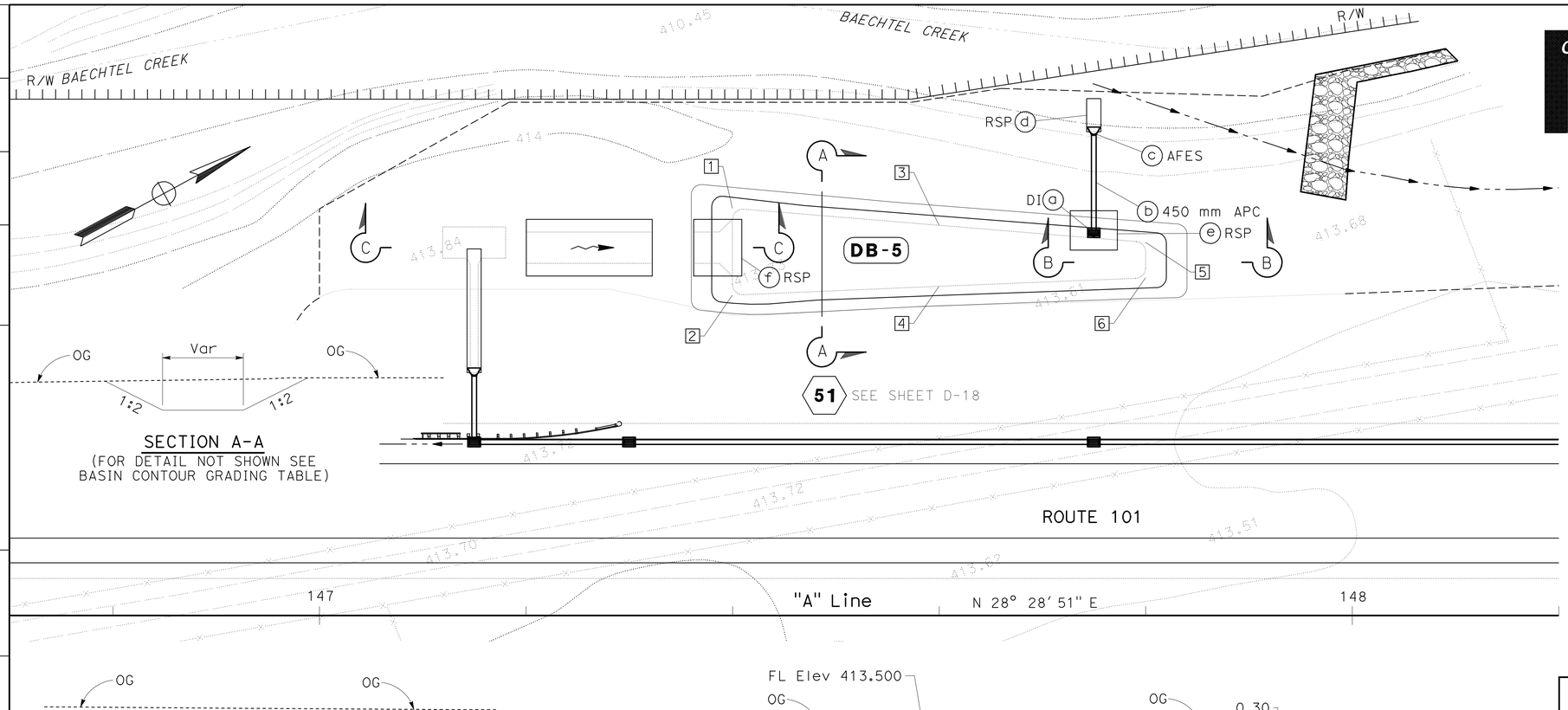

BASIN CONTOUR GRADING TABLE			
☐	STATION	OFFSET	Elev
1	"A" 147+18.108	34.089 Lt	412.500
2	"A" 147+20.000	35.565 Lt	412.500
3	"A" 147+23.356	34.089 Lt	412.500

RSP DETAIL				
DRAINAGE BASIN No.	DRAINAGE UNIT	RSP DIMENSIONS		
		DEPTH	AREA	VOLUME
		m	m^2	m^3
6	d	0.30	11.86	3.6
	e	0.46	4.39	2.0
	f	0.30	25.54	7.8

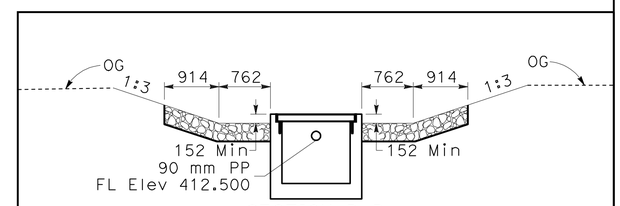

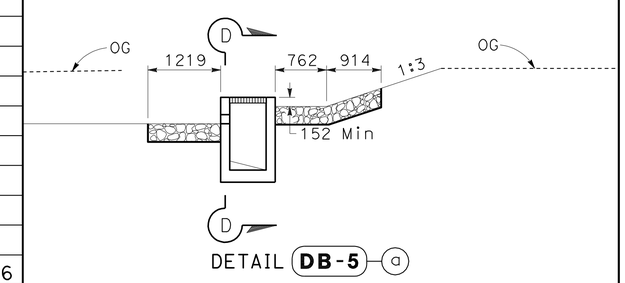

TYPE G2-DI
(DIMENSIONS IN MILLIMETERS)
FOR DETAILS NOT SHOWN, SEE STANDARD PLAN D73
NO SCALE

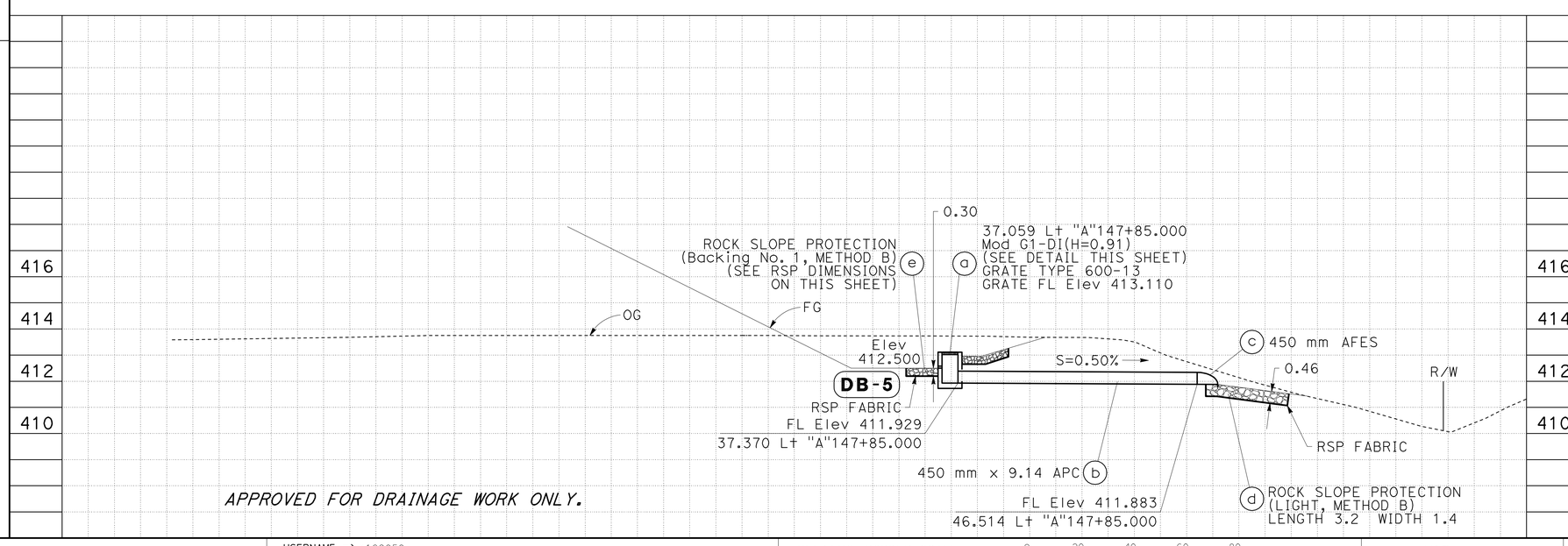

APPROVED FOR DRAINAGE WORK ONLY.

ALL DIMENSIONS ARE IN METERS UNLESS OTHERWISE SHOWN.

DRAINAGE DETAILS

NO SCALE

DD-41

REVISED BY	MGA
DATE REVISED	05-30-11
CALCULATED-DESIGNED BY	SCOTT FOSTER
CHECKED BY	KAO THAO
FUNCTIONAL SUPERVISOR	DOUGLAS S. JONES

STATE OF CALIFORNIA - DEPARTMENT OF TRANSPORTATION
Caltrans 03-DESIGN EAST

LAST REVISION 08-12-11
DATE PLOTTED => 28-JAN-2012
TIME PLOTTED => 07:04

Dist	COUNTY	ROUTE	KILOMETER POST TOTAL PROJECT	SHEET No.	TOTAL SHEETS
01	Men	101	R69.4/R78.9	375	939

Mitch Andrus 9-22-11
REGISTERED CIVIL ENGINEER DATE

1-23-12
PLANS APPROVAL DATE

REGISTERED PROFESSIONAL ENGINEER MITCH ANDRUS No. C48753 Exp. 9-30-12 CIVIL STATE OF CALIFORNIA

THE STATE OF CALIFORNIA OR ITS OFFICERS OR AGENTS SHALL NOT BE RESPONSIBLE FOR THE ACCURACY OR COMPLETENESS OF ELECTRONIC COPIES OF THIS PLAN SHEET.

Caltrans Metric

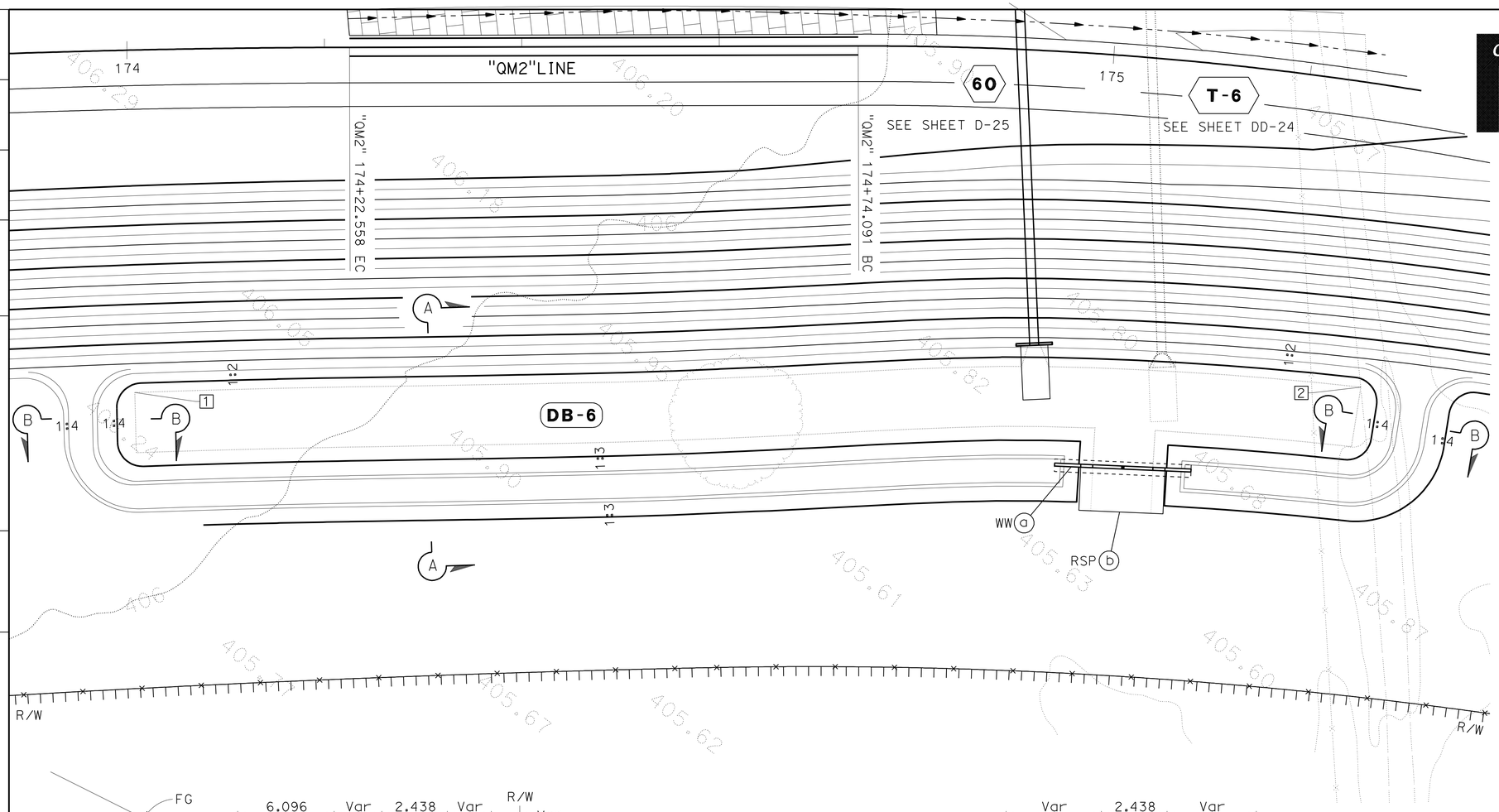

BASIN CONTOUR GRADING TABLE			
☐	STATION	OFFSET	Elev
1	"QM2"174+00.000	40.784 Rt	405.534
2	"QM2"175+30.000	36.712 Rt	405.534

RSP DETAIL				
DRAINAGE BASIN No.	DRAINAGE UNIT	RSP DIMENSIONS		
		DEPTH	AREA	VOLUME
		m	m^2	m^3
6	b	0.61	37.258	22.7

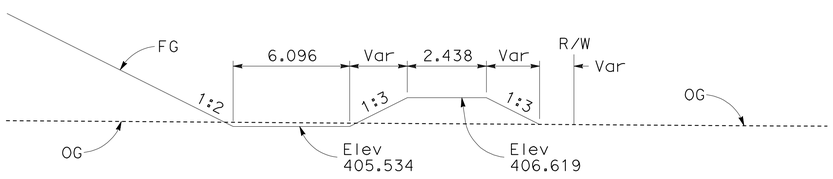

SECTION A-A

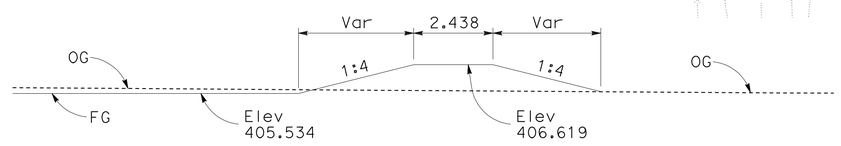

SECTION B-B

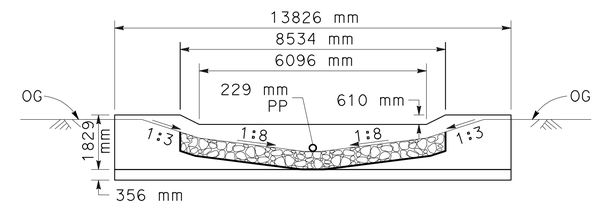

SECTION C-C

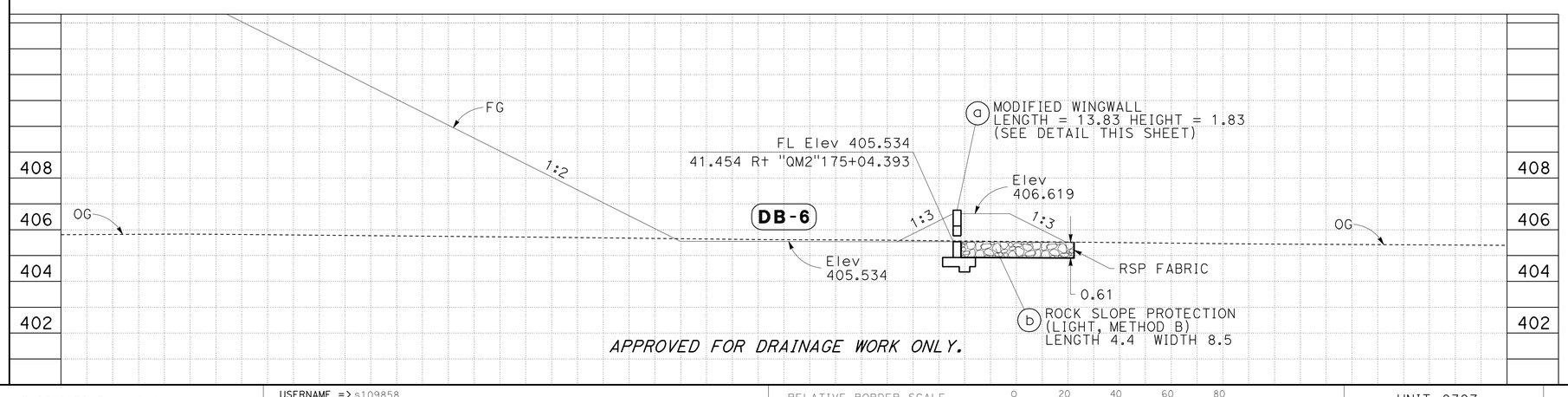

APPROVED FOR DRAINAGE WORK ONLY.

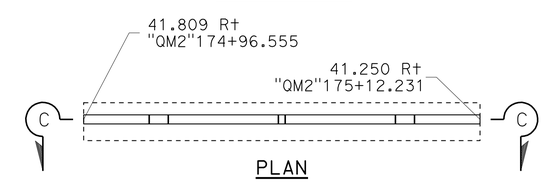

PLAN

Mod HEADWALL DETAIL

NO SCALE
(FOR DETAIL NOT SHOWN SEE Std PLAN D90)

ALL DIMENSIONS ARE IN METERS
UNLESS OTHERWISE SHOWN.

DRAINAGE DETAILS

NO SCALE

DD-42

REVISED BY	DATE REVISED
MGA	05-30-11

CALCULATED-DESIGNED BY: SCOTT FOSTER
CHECKED BY: KAO THAO
FUNCTIONAL SUPERVISOR: DOUGLAS S. JONES

STATE OF CALIFORNIA - DEPARTMENT OF TRANSPORTATION
Caltrans 03-DESIGN EAST

LAST REVISION 05-30-11 DATE PLOTTED => 28-JAN-2012 TIME PLOTTED => 07:04

Dist	COUNTY	ROUTE	KILOMETER POST TOTAL PROJECT	SHEET No.	TOTAL SHEETS
01	Men	101	R69.4/R78.9	376	939

Mitch Andrus 9-22-11
REGISTERED CIVIL ENGINEER DATE

1-23-12
PLANS APPROVAL DATE

REGISTERED PROFESSIONAL ENGINEER MITCH ANDRUS No. C48753 Exp. 9-30-12 CIVIL STATE OF CALIFORNIA

THE STATE OF CALIFORNIA OR ITS OFFICERS OR AGENTS SHALL NOT BE RESPONSIBLE FOR THE ACCURACY OR COMPLETENESS OF ELECTRONIC COPIES OF THIS PLAN SHEET.

Caltrans Metric

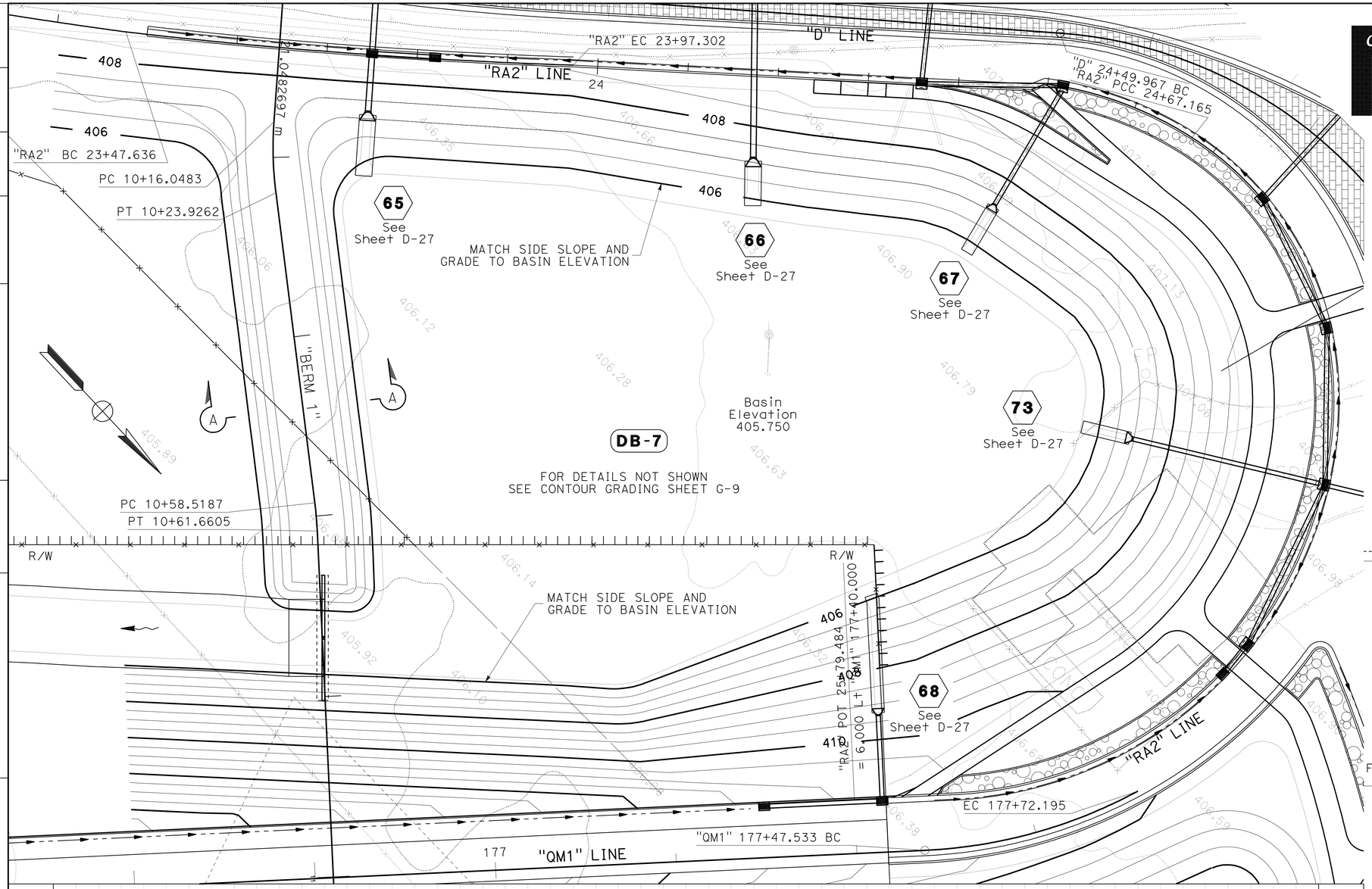

RSP DETAIL				
DRAINAGE BASIN No.	DRAINAGE UNIT	RSP DIMENSIONS		
		DEPTH	AREA	VOLUME
		m	m^2	m^3
8	b	0.61	31.215	19.0

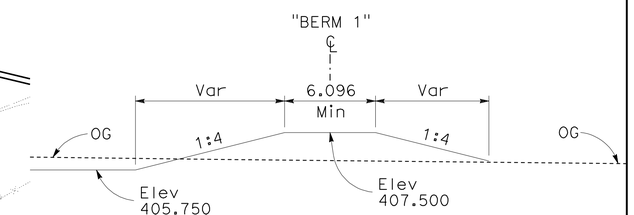

SECTION A-A

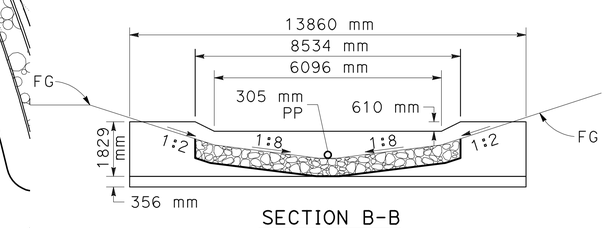

SECTION B-B

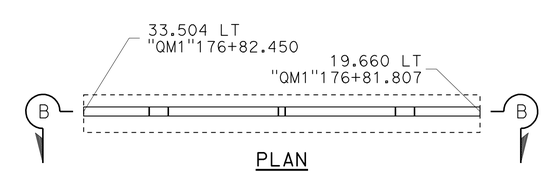

PLAN

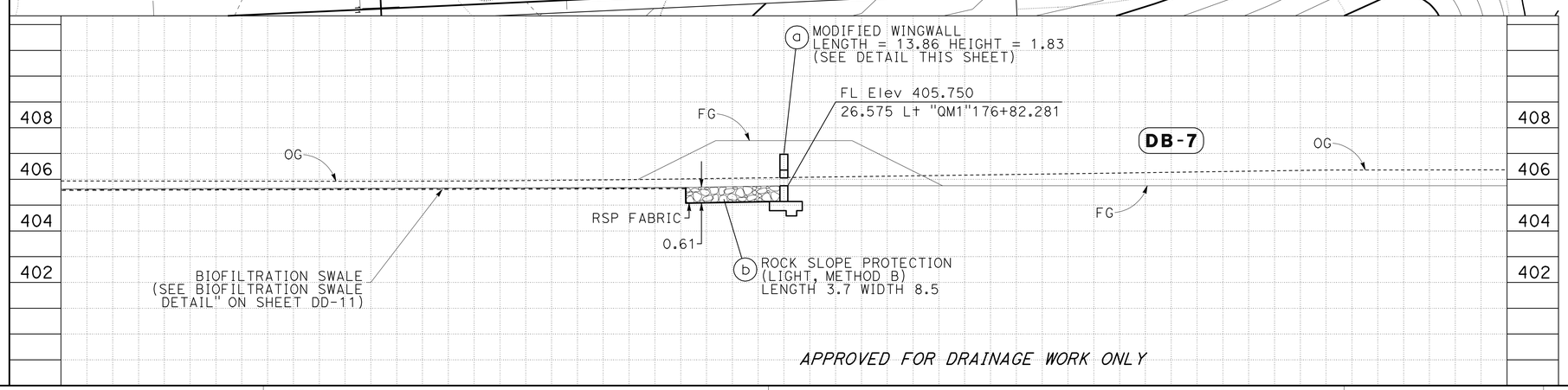

Mod HEADWALL DETAIL

NO SCALE
(FOR DETAIL NOT SHOWN SEE Std PLAN D90)

ALL DIMENSIONS ARE IN METERS UNLESS OTHERWISE SHOWN.

DRAINAGE DETAILS

NO SCALE

DD-43

FUNCTIONAL SUPERVISOR	CALCULATED-DESIGNED BY	CHECKED BY	REVISED BY	DATE REVISED
DOUGLAS S. JONES	SCOTT FOSTER	KAO THAO	MGA	05-30-11

STATE OF CALIFORNIA - DEPARTMENT OF TRANSPORTATION
Caltrans 03-DESIGN EAST

LAST REVISION 08-12-11 | DATE PLOTTED => 31-JAN-2012 | TIME PLOTTED => 13:05

Dist	COUNTY	ROUTE	KILOMETER POST TOTAL PROJECT	SHEET No.	TOTAL SHEETS
01	Men	101	R69.4/R78.9	377	939

Mitch Andrus 9-22-11
REGISTERED CIVIL ENGINEER DATE

1-23-12
PLANS APPROVAL DATE

REGISTERED PROFESSIONAL ENGINEER MITCH ANDRUS No. C48753 Exp. 9-30-12 CIVIL STATE OF CALIFORNIA

THE STATE OF CALIFORNIA OR ITS OFFICERS OR AGENTS SHALL NOT BE RESPONSIBLE FOR THE ACCURACY OR COMPLETENESS OF ELECTRONIC COPIES OF THIS PLAN SHEET.

Caltrans Metric

BIOSWALE FLOWLINE TABLE			
☐	STATION	OFFSET	Elev
1	"QM3" 180+21.825	32.812L+	406.054
2	"QM3" 180+23.325	22.059L+	406.027

SECTION C-C

SECTION D-D

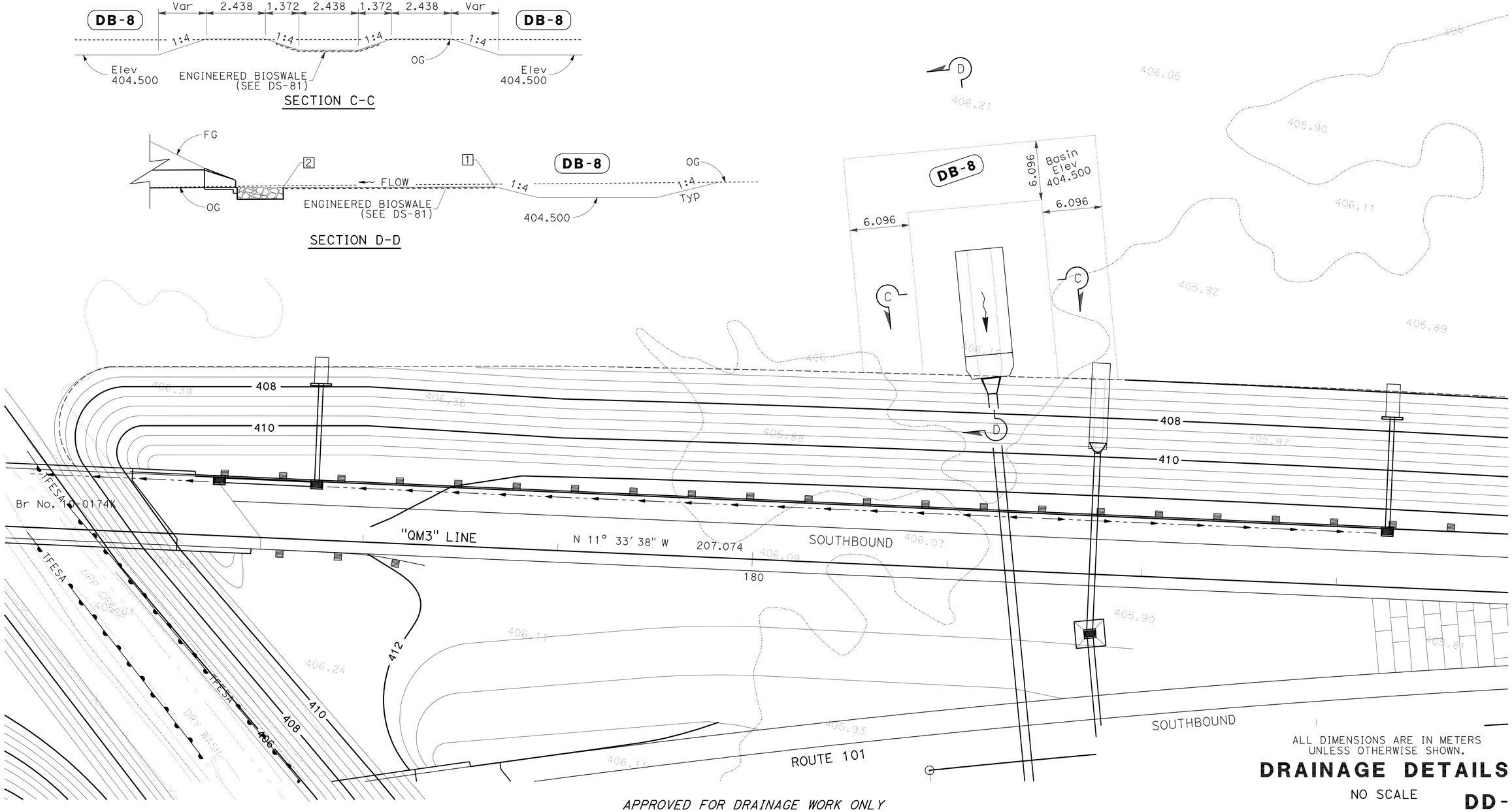

ALL DIMENSIONS ARE IN METERS
UNLESS OTHERWISE SHOWN.

DRAINAGE DETAILS

NO SCALE

DD-44

APPROVED FOR DRAINAGE WORK ONLY

STATE OF CALIFORNIA - DEPARTMENT OF TRANSPORTATION
Caltrans 03-DESIGN EAST

FUNCTIONAL SUPERVISOR: DOUGLAS S. JONES
CALCULATED-DESIGNED BY: SCOTT FOSTER
CHECKED BY: KAO THAO
REVISED BY: MGA
DATE REVISED: 05-30-11

LAST REVISION: DATE PLOTTED => 31-JAN-2012
TIME PLOTTED => 13:06

Dist	COUNTY	ROUTE	KILOMETER POST TOTAL PROJECT	SHEET No.	TOTAL SHEETS
01	Men	101	R69.4/R78.9	378	939

Mitch Andrus 9-22-11
REGISTERED CIVIL ENGINEER DATE

1-23-12
PLANS APPROVAL DATE

REGISTERED PROFESSIONAL ENGINEER MITCH ANDRUS No. C48753 Exp. 9-30-12 CIVIL STATE OF CALIFORNIA

THE STATE OF CALIFORNIA OR ITS OFFICERS OR AGENTS SHALL NOT BE RESPONSIBLE FOR THE ACCURACY OR COMPLETENESS OF ELECTRONIC COPIES OF THIS PLAN SHEET.

Caltrans Metric

LEGEND

- HABITAT BOULDER
- GRADE CONTROL STRUCTURE (ROCK SILL)
- GRADE CONTROL STRUCTURE (ROCK WEIR)
- BANKLINE ROCK
- BRUSH LAYERING
- LONGITUDINAL STONE TOE
- VEGETATED RSP
- PROPOSED CREEK FLOWLINES

NOTES:
1. FOR PROPOSED CONTOURS SEE CONTOUR GRADING SHEETS.

Br No. 10-129F

BANKLINE ROCK & STREAMBED MATERIAL	"HCI" STATION BEGIN	"HCI" STATION END	RSP SAND & GRAVEL m^3	RSP BACKING No. 1 m^3	RSP LIGHT m^3	RSP 1/4 T m^3	RSP 1/2 T m^3
L+	61+08.016	61+91.289	-	203.2	174.1	-	-
R+	61+10.292	61+91.289	-	197.6	169.3	-	-
	61+08.016	61+91.289	272.1	94.7	196.5	-	-
VEGETATED RSP							
L+	61+32.956	61+49.679	-	35.0	-	40.7	-
ROCK WEIR							
2			-	65.2	-	-	130.6
BOULDER CLUSTER							
6			-	-	-	-	13.5

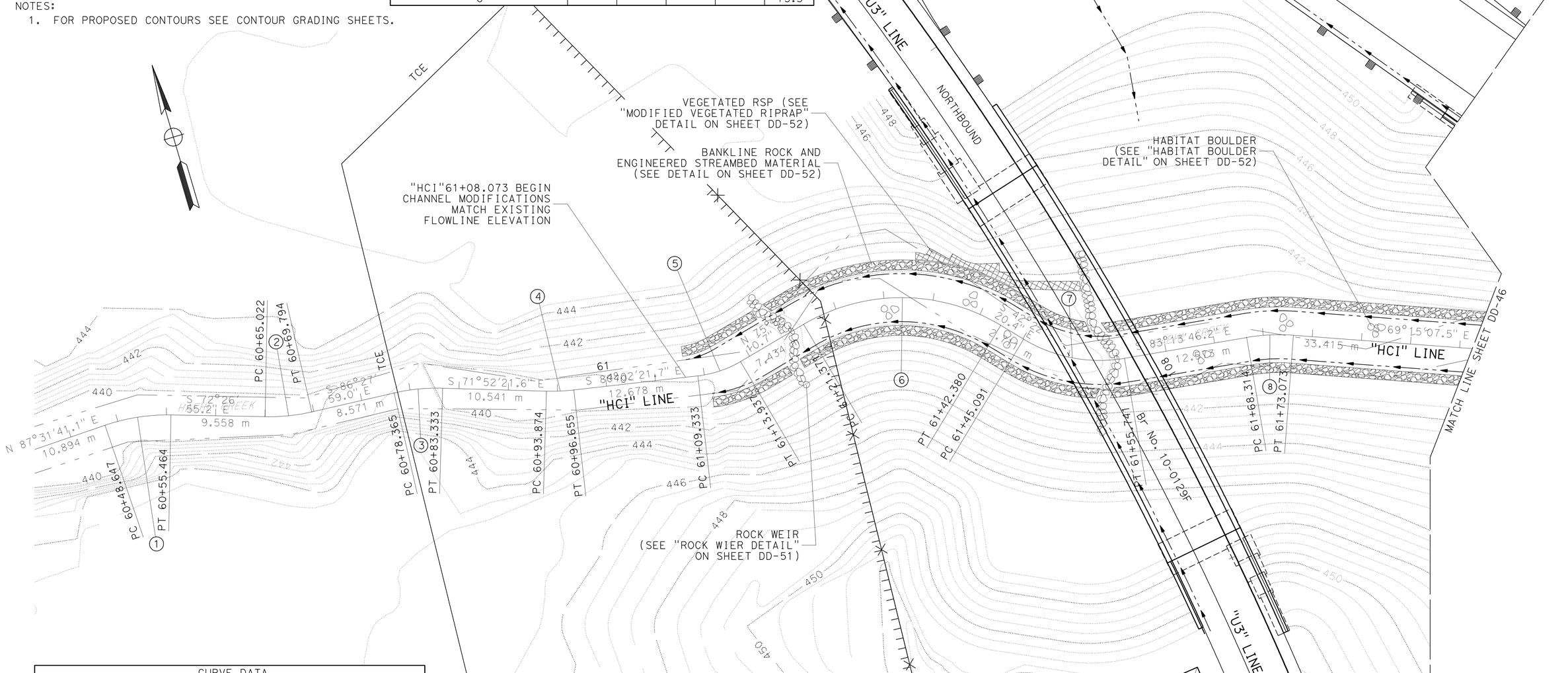

CURVE DATA				
No.	R	Δ	T	L
1	19.507	20°01'24"	3.444	6.817
2	19.507	14°01'04"	2.398	4.773
3	19.507	14°35'37"	2.498	4.969
4	19.507	8°10'01"	1.393	2.780
5	10.973	24°2'27"	2.336	4.604
6	19.507	61°42'29"	11.654	21.009
7	14.935	40°51'26"	5.563	10.650
8	19.507	13°58'39"	2.391	4.759

APPROVED FOR DRAINAGE WORK ONLY.

ALL DIMENSIONS ARE IN METERS UNLESS OTHERWISE SHOWN.

DRAINAGE DETAILS

NO SCALE

DD-45

REVISED BY	DATE REVISED
MGA	05-30-11

CALCULATED-DESIGNED BY: SCOTT FOSTER
CHECKED BY: KAO THAO
FUNCTIONAL SUPERVISOR: DOUGLAS S. JONES

STATE OF CALIFORNIA - DEPARTMENT OF TRANSPORTATION
Caltrans 03-DESIGN EAST

LAST REVISION 11-30-11
DATE PLOTTED => 28-JAN-2012
TIME PLOTTED => 06:10

Dist	COUNTY	ROUTE	KILOMETER POST TOTAL PROJECT	SHEET No.	TOTAL SHEETS
01	Men	101	R69.4/R78.9	379	939

Mitch Andrus 9-22-11
REGISTERED CIVIL ENGINEER DATE

1-23-12
PLANS APPROVAL DATE

REGISTERED PROFESSIONAL ENGINEER MITCH ANDRUS No. C48753 Exp. 9-30-12 CIVIL STATE OF CALIFORNIA

THE STATE OF CALIFORNIA OR ITS OFFICERS OR AGENTS SHALL NOT BE RESPONSIBLE FOR THE ACCURACY OR COMPLETENESS OF ELECTRONIC COPIES OF THIS PLAN SHEET.

Caltrans Metric

NOTES:
1. FOR PROPOSED CONTOURS SEE CONTOUR GRADING SHEETS.

CURVE DATA				
No.	R	Δ	T	L
9	19.507	35°5'50"	6.169	11.949
10	19.507	42°46'38"	7.640	14.564
11	19.507	49°25'47"	8.978	16.829
12	7.620	36°28'10"	2.510	4.850
13	7.620	35°26'40"	2.435	4.714
14	10.973	32°46'03"	3.226	6.275

Br No. 10-129R							
BANKLINE ROCK & STREAMBED MATERIAL			RSP				
"HCI" STATION			SAND & GRAVEL	BACKING No. 1	LIGHT	1/4 T	1/2 T
	BEGIN	END	m^3	m^3	m^3	m^3	m^3
L†	62+41.046	63+07.277	-	161.6	138.5	-	-
R†	62+41.046	63+19.661	-	191.8	164.4	-	-
	62+41.046	63+19.661	256.9	89.4	185.5	-	-
VEGETATED RSP							
L†	62+41.046	62+46.966	-	12.4	-	14.4	-
R†	62+41.046	62+68.168	-	58.0	-	67.5	-
R†	63+00.889	63+25.651	-	52.9	-	61.7	-
ROCK SILL							
1			-	14.3	-	-	28.8
ROCK WEIR							
2			-	74.4	-	-	149.0
BOULDER CLUSTER							
5			-	-	-	-	11.25

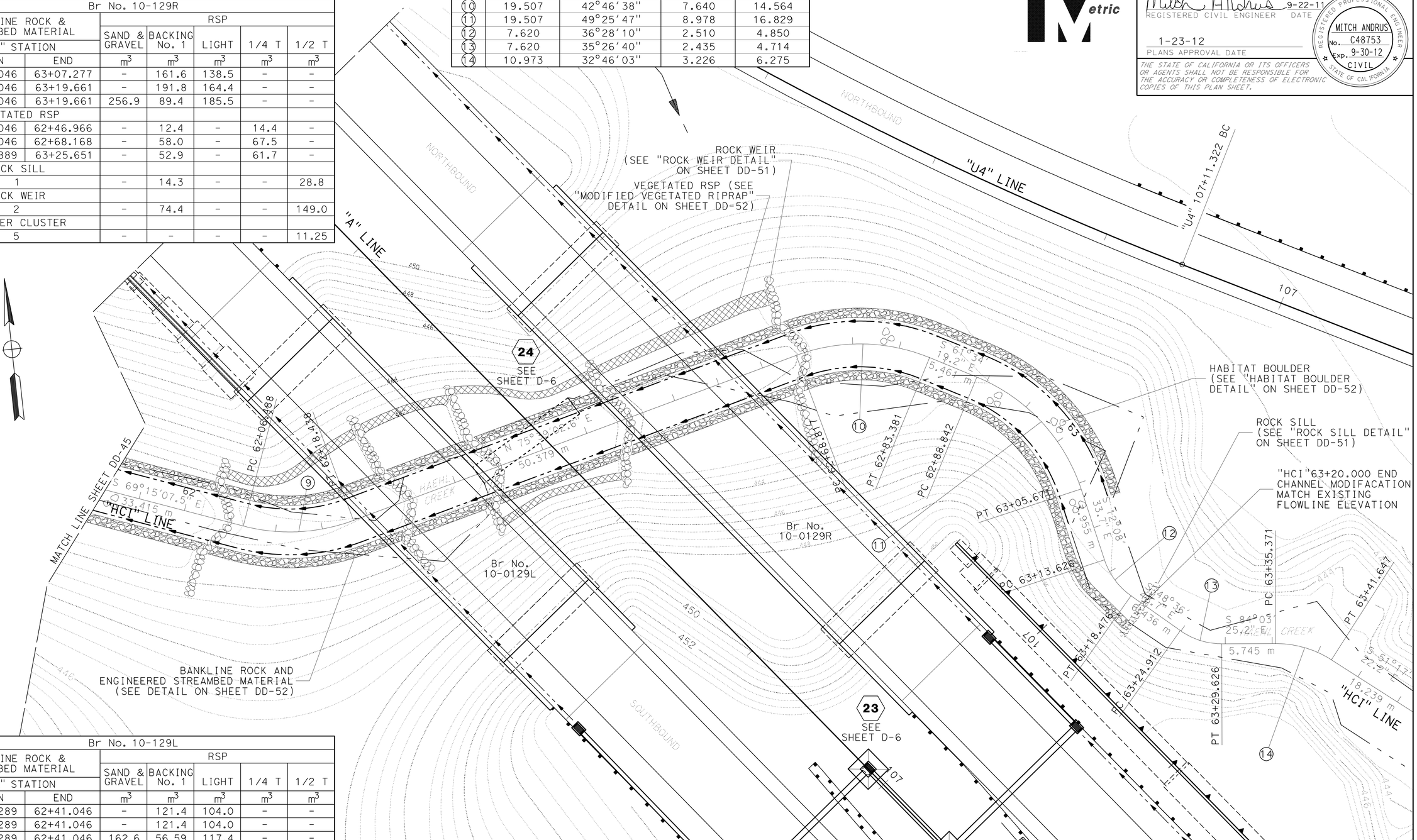

Br No. 10-129L							
BANKLINE ROCK & STREAMBED MATERIAL			RSP				
"HCI" STATION			SAND & GRAVEL	BACKING No. 1	LIGHT	1/4 T	1/2 T
	BEGIN	END	m^3	m^3	m^3	m^3	m^3
L†	61+91.289	62+41.046	-	121.4	104.0	-	-
R†	61+91.289	62+41.046	-	121.4	104.0	-	-
	61+91.289	62+41.046	162.6	56.59	117.4	-	-
VEGETATED RSP							
L†	62+03.515	62+41.046	-	78.6	-	91.4	-
R†	62+33.310	62+41.046	-	16.5	-	19.3	-
ROCK WEIR							
3			-	107.0	-	-	214.3
BOULDER CLUSTER							
1			-	-	-	-	2.25

APPROVED FOR DRAINAGE WORK ONLY.

ALL DIMENSIONS ARE IN METERS UNLESS OTHERWISE SHOWN.

DRAINAGE DETAILS

NO SCALE

DD-46

STATE OF CALIFORNIA - DEPARTMENT OF TRANSPORTATION
Caltrans 03-DESIGN EAST

FUNCTIONAL SUPERVISOR: DOUGLAS S. JONES
CALCULATED-DESIGNED BY: SCOTT FOSTER
CHECKED BY: KAO THAO
REVISED BY: MGA
DATE REVISED: 05-30-11

LAST REVISION 11-30-11
DATE PLOTTED => 28-JAN-2012
TIME PLOTTED => 06:10

Dist	COUNTY	ROUTE	KILOMETER POST TOTAL PROJECT	SHEET No.	TOTAL SHEETS
01	Men	101	R69.4/R78.9	380	939

Mitch Andrus 9-22-11
REGISTERED CIVIL ENGINEER DATE

1-23-12
PLANS APPROVAL DATE

REGISTERED PROFESSIONAL ENGINEER MITCH ANDRUS No. C48753 Exp. 9-30-12 CIVIL STATE OF CALIFORNIA

THE STATE OF CALIFORNIA OR ITS OFFICERS OR AGENTS SHALL NOT BE RESPONSIBLE FOR THE ACCURACY OR COMPLETENESS OF ELECTRONIC COPIES OF THIS PLAN SHEET.

Caltrans Metric

NOTE:

1. FOR PROPOSED CONTOURS SEE CONTOUR GRADING SHEETS.

CURVE DATA				
No.	R	Δ	T	L
17	14.938	7°44′20"	1.010	2.018
18	14.935	31°27′38"	4.207	8.201
19	14.935	40°01′13"	5.439	10.432
20	19.507	37°59′56"	6.717	12.937
21	19.507	70°00′48"	13.662	23.837
22	10.973	24°20′58"	2.367	4.663
23	10.973	35°07′20"	3.473	6.726
24	19.508	14°46′44"	2.530	5.032

Br No. 10-0129G							
BANKLINE ROCK & STREAMBED MATERIAL			RSP				
"HCI" STATION			SAND & GRAVEL	BACKING No. 1	LIGHT	1/4 T	1/2 T
	BEGIN	END	m^3	m^3	m^3	m^3	m^3
L†	64+10.543	64+81.139	-	172.3	147.6	-	-
R†	64+10.543	64+81.139	-	172.3	147.6	-	-
	64+10.543	64+81.139	230.7	80.3	166.6	-	-
LONGITUDINAL STONE TOE							
R†	64+63.684	64+76.692	-	-	57.5	-	-
VEGETATED RSP							
L†	61+32.956	61+49.679	-	47.0	-	54.7	-
R†	61+32.956	61+49.679	-	59.6	-	69.4	-
ROCK SILL							
2			-	86.7	-	-	175.0
BOULDER CLUSTER							
6			-	-	-	-	13.5

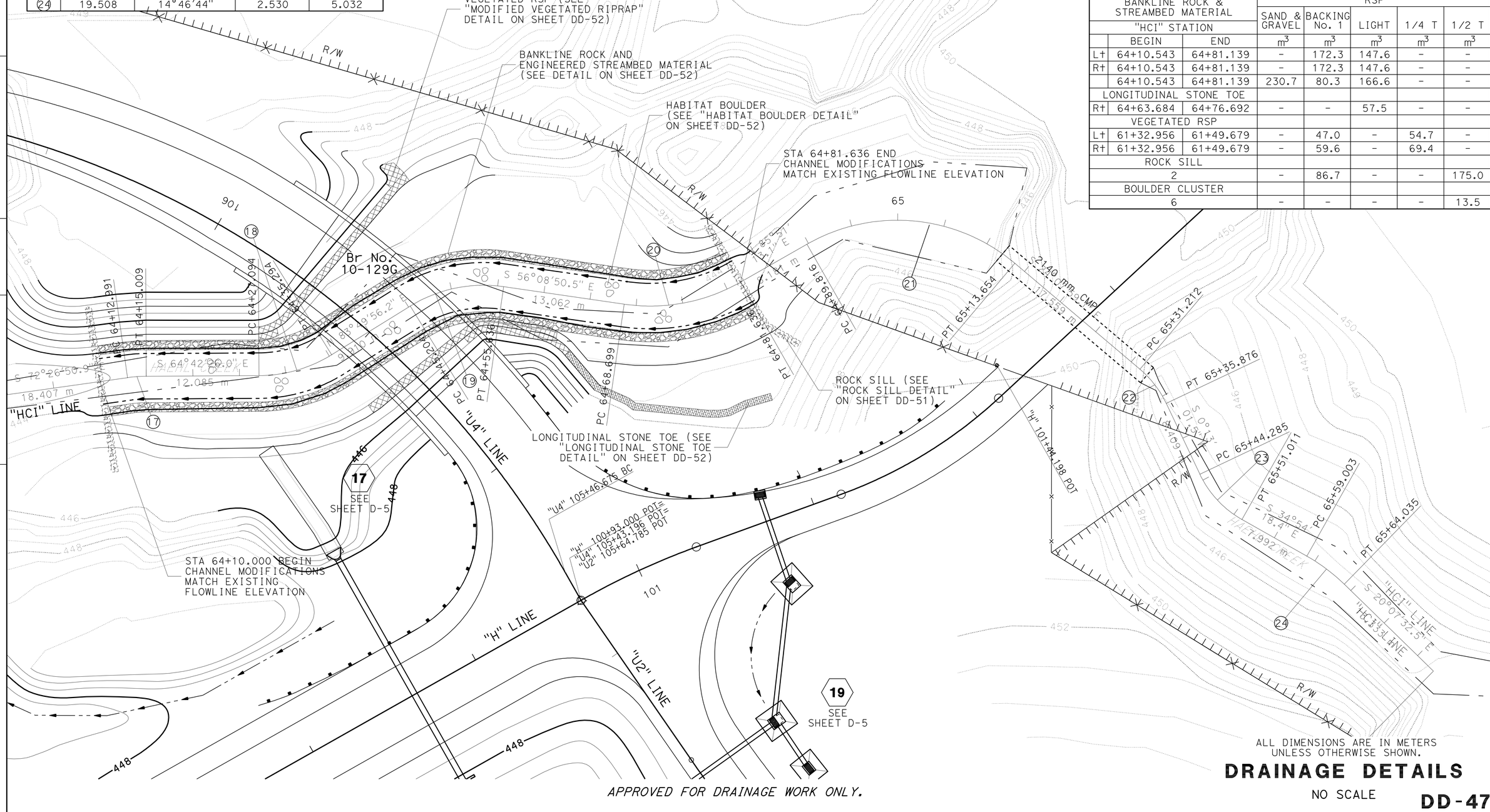

ALL DIMENSIONS ARE IN METERS UNLESS OTHERWISE SHOWN.

DRAINAGE DETAILS

NO SCALE

DD-47

APPROVED FOR DRAINAGE WORK ONLY.

STATE OF CALIFORNIA - DEPARTMENT OF TRANSPORTATION
Caltrans 03-DESIGN EAST

FUNCTIONAL SUPERVISOR: DOUGLAS S. JONES
CALCULATED-DESIGNED BY: SCOTT FOSTER
CHECKED BY: KAO THAO
REVISED BY: MGA
DATE REVISED: 05-30-11

LAST REVISION: 11-30-11
DATE PLOTTED => 28-JAN-2012
TIME PLOTTED => 06:10

Dist	COUNTY	ROUTE	KILOMETER POST TOTAL PROJECT	SHEET No.	TOTAL SHEETS
01	Men	101	R69.4/R78.9	381	939

Mitch Andrus 9-22-11
REGISTERED CIVIL ENGINEER DATE

1-23-12
PLANS APPROVAL DATE

REGISTERED PROFESSIONAL ENGINEER MITCH ANDRUS No. C48753 Exp. 9-30-12 CIVIL STATE OF CALIFORNIA

THE STATE OF CALIFORNIA OR ITS OFFICERS OR AGENTS SHALL NOT BE RESPONSIBLE FOR THE ACCURACY OR COMPLETENESS OF ELECTRONIC COPIES OF THIS PLAN SHEET.

Caltrans Metric

LEGEND

- HABITAT BOULDER
- GRADE CONTROL STRUCTURE (ROCK SILL)
- GRADE CONTROL STRUCTURE (ROCK WEIR)
- BANKLINE ROCK
- VEGETATED RSP
- BRUSH LAYERING
- PROPOSED CREEK FLOWLINES

NOTES:
1. FOR VEGETATED RSP DETAILS, SEE SHEET DD-19.

LOCATION			RSP	
Br No. 10-0174K			BACKING No. 1	LIGHT
ALIGNMENT	BEGIN	END	m^3	m^3
"UPPCK2"	0+00.000	+50.000	189.8	249.4
"UPPCK3"	0+00.000	+45.000	160.1	213.0

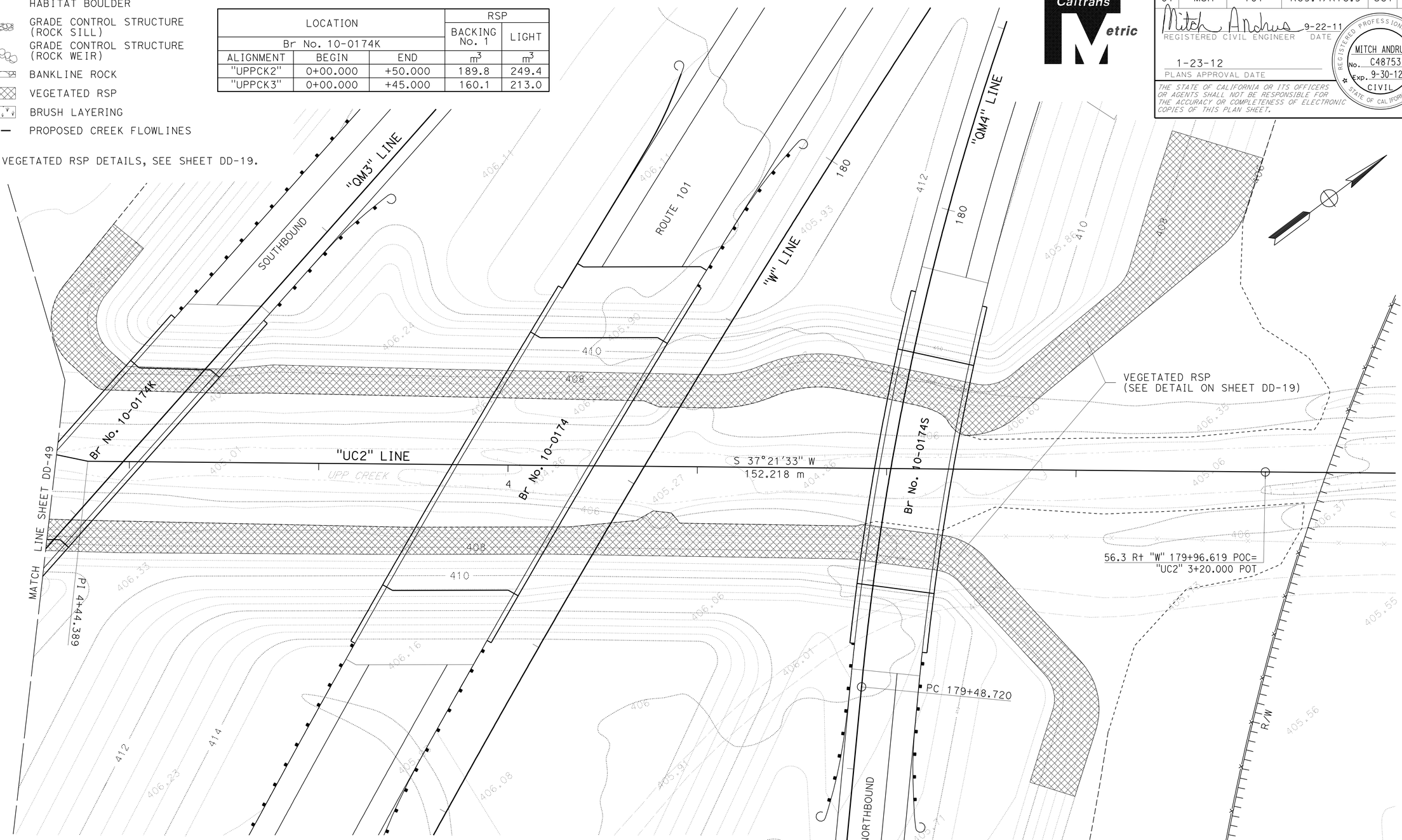

LOCATION			RSP	
Br No. 10-0174			BACKING No. 1	LIGHT
ALIGNMENT	BEGIN	END	m^3	m^3
"UPPCK2"	+50.000	1+00.000	263.0	281.2
"UPPCK3"	+45.000	+85.000	213.6	228.2

LOCATION			RSP	
Br No. 10-0174S			BACKING No. 1	LIGHT
ALIGNMENT	BEGIN	END	m^3	m^3
"UPPCK2"	1+00.000	1+55.691	287.9	339.7
"UPPCK3"	+85.000	1+45.083	311.3	355.0

APPROVED FOR FISH PASSAGE WORK ONLY.

ALL DIMENSIONS ARE IN METERS UNLESS OTHERWISE SHOWN.

DRAINAGE DETAILS

NO SCALE

DD-48

REVISED BY	DATE REVISED
MGA	05-30-11

CALCULATED-DESIGNED BY: KAO THAO
CHECKED BY: SCOTT FOSTER
FUNCTIONAL SUPERVISOR: DOUGLAS S. JONES

STATE OF CALIFORNIA - DEPARTMENT OF TRANSPORTATION
Caltrans 03-DESIGN EAST

LAST REVISION 12-01-11
DATE PLOTTED => 28-JAN-2012
TIME PLOTTED => 06:10

NOTES:
1. FOR PROPOSED CONTOURS SEE CONTOUR GRADING SHEETS.
2. FOR VEGETATED RSP DETAILS, SEE SHEETS DD-19.
3. FOR VEGETATED RSP QUANTITIES, SEE SHEETS DD-48.

BANKLINE ROCK & STREAMBED MATERIAL	RSP	
	BACKING No. 1	1/2 T
	m^3	m^3
ROCK WEIR		
3	83.8	167.8

Dist	COUNTY	ROUTE	KILOMETER POST TOTAL PROJECT	SHEET No.	TOTAL SHEETS
01	Men	101	R69.4/R78.9	382	939

Mitch Andrus 9-22-11
REGISTERED CIVIL ENGINEER DATE

1-23-12
PLANS APPROVAL DATE

REGISTERED PROFESSIONAL ENGINEER MITCH ANDRUS No. C48753 Exp. 9-30-12 CIVIL STATE OF CALIFORNIA

THE STATE OF CALIFORNIA OR ITS OFFICERS OR AGENTS SHALL NOT BE RESPONSIBLE FOR THE ACCURACY OR COMPLETENESS OF ELECTRONIC COPIES OF THIS PLAN SHEET.

Caltrans Metric

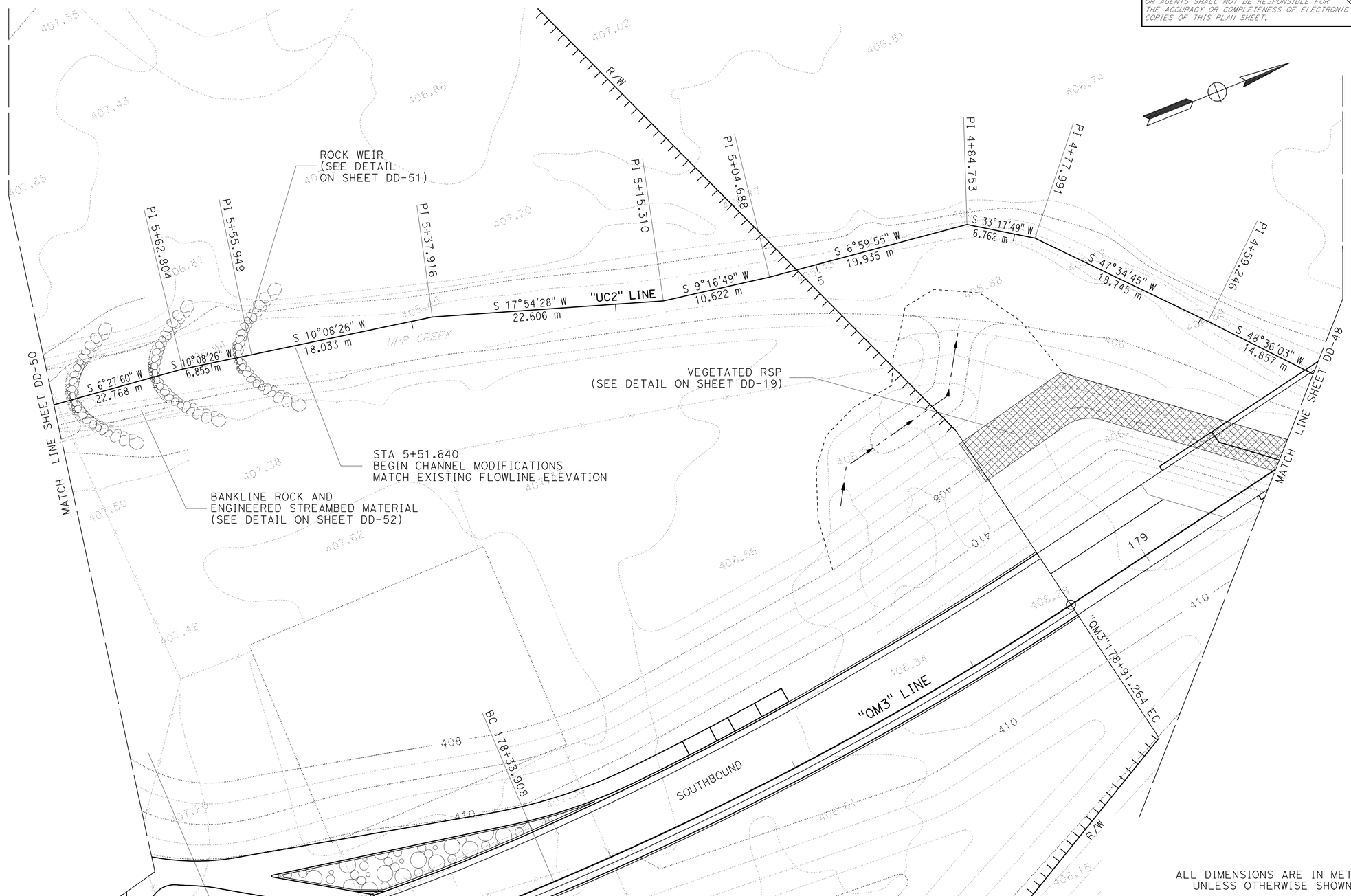

APPROVED FOR FISH PASSAGE WORK ONLY.

ALL DIMENSIONS ARE IN METERS
UNLESS OTHERWISE SHOWN.

DRAINAGE DETAILS

NO SCALE

DD-49

CALCULATED-DESIGNED BY	KAO THAO	REVISED BY	MGA
CHECKED BY	SCOTT FOSTER	DATE REVISED	05-30-11
FUNCTIONAL SUPERVISOR	DOUGLAS S. JONES		

STATE OF CALIFORNIA - DEPARTMENT OF TRANSPORTATION
Caltrans 03-DESIGN EAST

LAST REVISION 12-01-11 | DATE PLOTTED => 28-JAN-2012 | TIME PLOTTED => 06:10

Dist	COUNTY	ROUTE	KILOMETER POST TOTAL PROJECT	SHEET No.	TOTAL SHEETS
01	Men	101	R69.4/R78.9	383	939

Mitch Andrus 9-22-11
REGISTERED CIVIL ENGINEER DATE

1-23-12
PLANS APPROVAL DATE

REGISTERED PROFESSIONAL ENGINEER MITCH ANDRUS No. C48753 Exp. 9-30-12 CIVIL STATE OF CALIFORNIA

THE STATE OF CALIFORNIA OR ITS OFFICERS OR AGENTS SHALL NOT BE RESPONSIBLE FOR THE ACCURACY OR COMPLETENESS OF ELECTRONIC COPIES OF THIS PLAN SHEET.

Caltrans Metric

NOTES:
1. FOR VEGETATED RSP DETAILS, SEE SHEET DD-19.

CURVE DATA

No.	R	Δ	T	L
①	25	43°23'01"	9.94	18.93
②	25	38°39'46"	8.77	16.87

LOCATION			RSP	
Br No. 10-0305			BACKING No. 1	LIGHT
ALIGNMENT	BEGIN	END	m^3	m^3
"UPPCK4"	0+00.000	+53.882	198.6	266.3
"UPPCK5"	0+00.000	+58.456	216.5	290.4

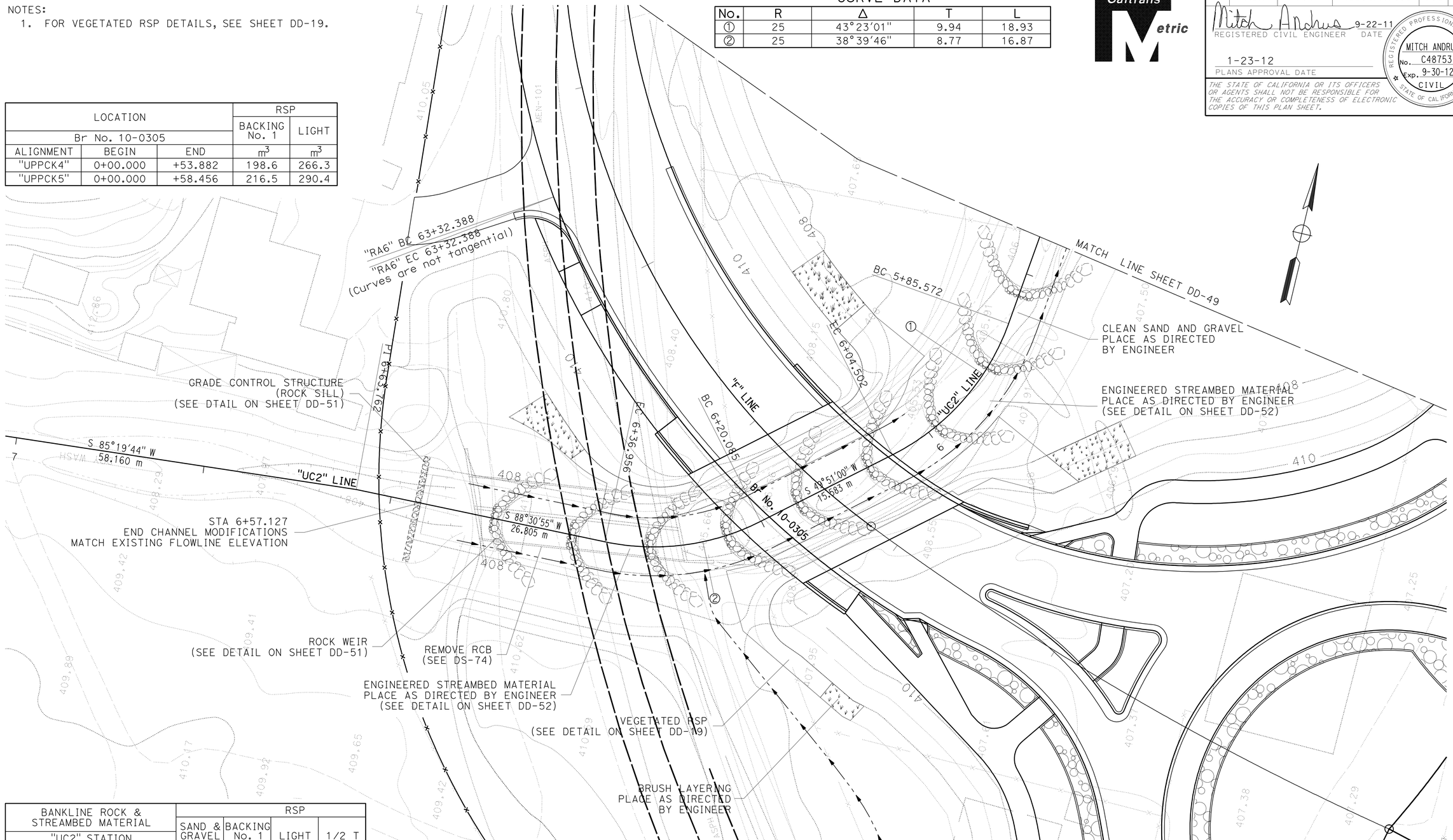

BANKLINE ROCK & STREAMBED MATERIAL			RSP			
"UC2" STATION			SAND & GRAVEL	BACKING No. 1	LIGHT	1/2 T
	BEGIN	END	m^3	m^3	m^3	m^3
L†	5+51.640	6+23.820	169.2	-	-	-
R†	6+23.820	6+57.127	123.2	268.2	294.6	-
ROCK SILL						
1			-	23.0	-	46.3
ROCK WEIR						
9			-	251.6	-	503.5

APPROVED FOR FISH PASSAGE WORK ONLY.

ALL DIMENSIONS ARE IN METERS
UNLESS OTHERWISE SHOWN.

DRAINAGE DETAILS

NO SCALE

DD-50

STATE OF CALIFORNIA - DEPARTMENT OF TRANSPORTATION
Caltrans 03-DESIGN EAST

FUNCTIONAL SUPERVISOR: DOUGLAS S. JONES
CALCULATED-DESIGNED BY: KAO THAO
CHECKED BY: SCOTT FOSTER
REVISED BY: MGA
DATE REVISED: 05-30-11

LAST REVISION 12-01-11
DATE PLOTTED => 28-JAN-2012
TIME PLOTTED => 06:10

Dist	COUNTY	ROUTE	KILOMETER POST TOTAL PROJECT	SHEET No.	TOTAL SHEETS
01	Men	101	R69.4/R78.9	384	939

Mitch Andrus 9-22-11
REGISTERED CIVIL ENGINEER DATE

1-23-12
PLANS APPROVAL DATE

REGISTERED PROFESSIONAL ENGINEER MITCH ANDRUS No. C48753 Exp. 9-30-12 CIVIL STATE OF CALIFORNIA

THE STATE OF CALIFORNIA OR ITS OFFICERS OR AGENTS SHALL NOT BE RESPONSIBLE FOR THE ACCURACY OR COMPLETENESS OF ELECTRONIC COPIES OF THIS PLAN SHEET.

Caltrans Metric

NOTES:

1. ½T ROCKS FOR ROCK WEIR AND ROCK SILLS ARE PLACED INDIVIDUALY, PACKED TIGHTLY TOGETHER, AND HAVE A MINIMUM OF THREE CONTACT POINTS WITH ADJACENT ROCKS.
2. PLACEMENT OF STONES 1, 2 AND 3 ARE TO BE DONE UNDER THE DIRECTION OF THE ENGINEER.

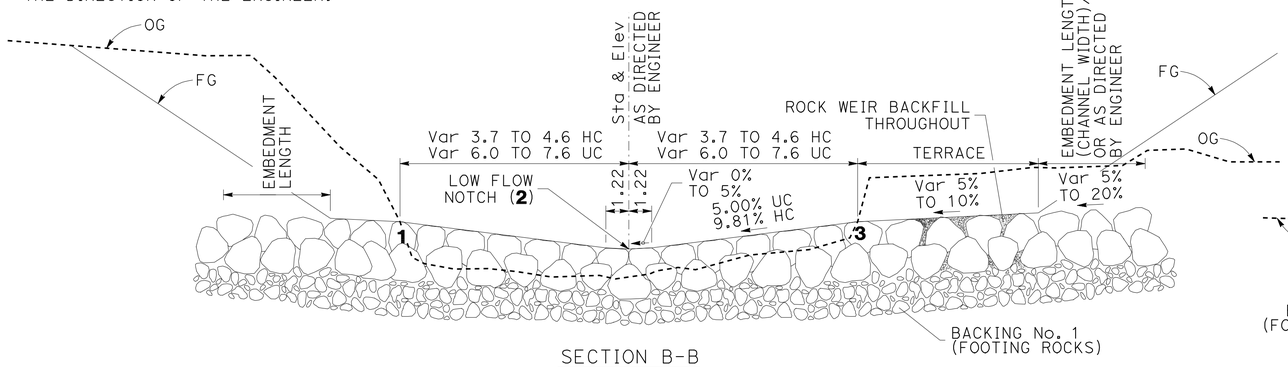

SECTION B-B

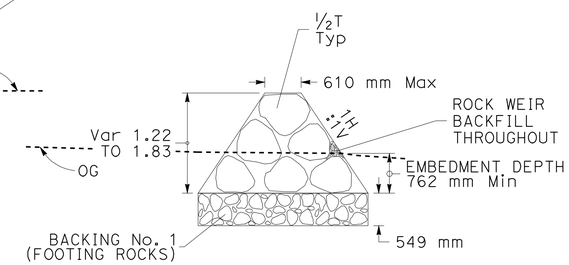

SECTION A-A

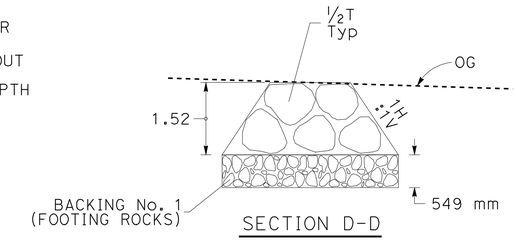

SECTION D-D

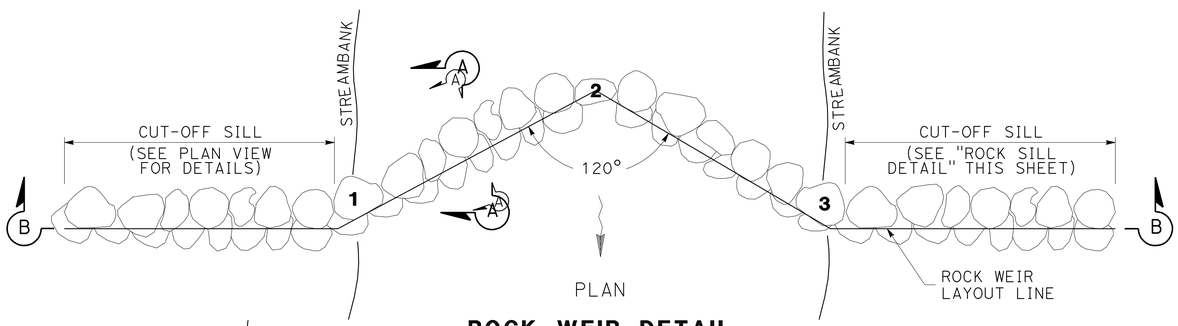

PLAN

ROCK WEIR DETAIL

(HAEHL CREEK)

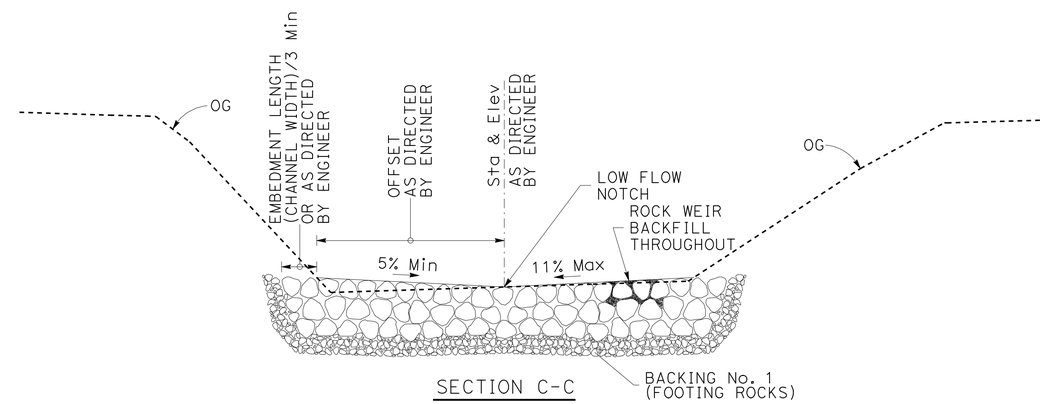

SECTION C-C

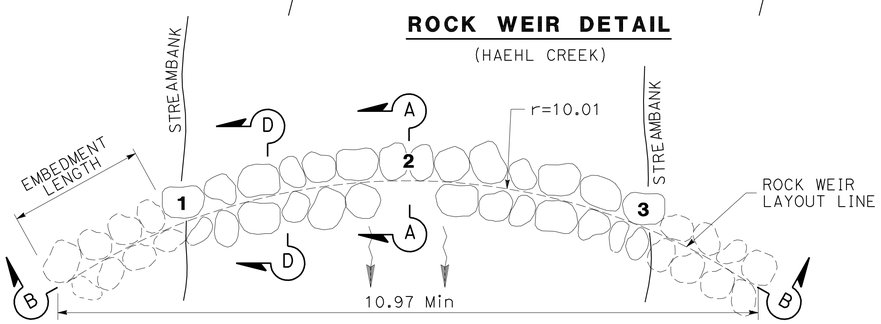

PLAN

ROCK WEIR DETAIL

(UPP CREEK)

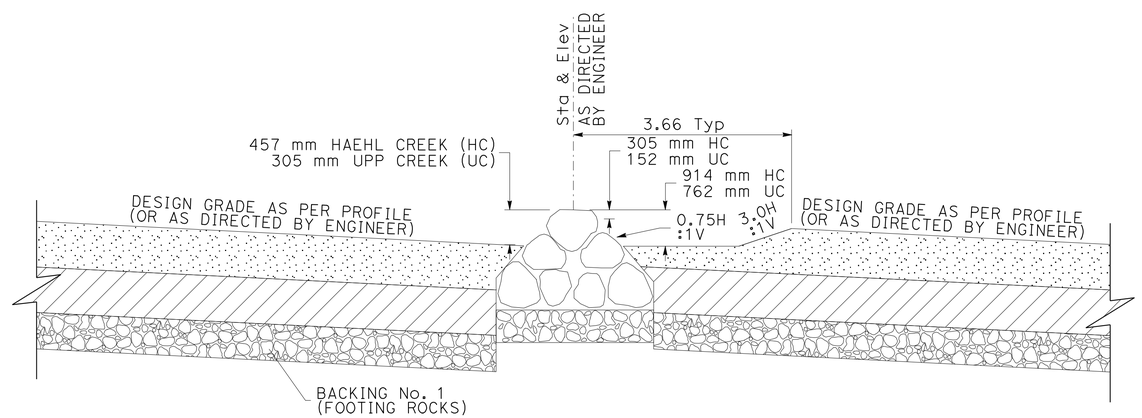

SCOUR POOL DETAIL

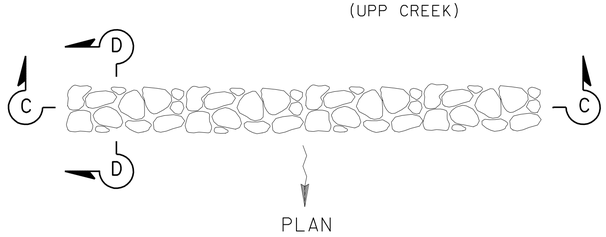

PLAN

ROCK SILL DETAIL

APPROVED FOR FISH PASSAGE WORK ONLY.

ALL DIMENSIONS ARE IN METERS UNLESS OTHERWISE SHOWN.

DRAINAGE DETAILS

NO SCALE

DD-51

REVISED BY	DATE REVISED
MGA	05-30-11

SCOTT FOSTER — KAO THAO — CALCULATED-DESIGNED BY — CHECKED BY

FUNCTIONAL SUPERVISOR: DOUGLAS S. JONES

STATE OF CALIFORNIA - DEPARTMENT OF TRANSPORTATION
Caltrans 03-DESIGN EAST

LAST REVISION 08-12-11 DATE PLOTTED => 28-JAN-2012 TIME PLOTTED => 06:10

Dist	COUNTY	ROUTE	KILOMETER POST TOTAL PROJECT	SHEET No.	TOTAL SHEETS
01	Men	101	R69.4/R78.9	385	939

Mitch Andrus 9-22-11
REGISTERED CIVIL ENGINEER DATE

1-23-12
PLANS APPROVAL DATE

REGISTERED PROFESSIONAL ENGINEER MITCH ANDRUS No. C48753 Exp. 9-30-12 CIVIL STATE OF CALIFORNIA

THE STATE OF CALIFORNIA OR ITS OFFICERS OR AGENTS SHALL NOT BE RESPONSIBLE FOR THE ACCURACY OR COMPLETENESS OF ELECTRONIC COPIES OF THIS PLAN SHEET.

Caltrans Metric

NOTES:

1. PLACEMENT OF HABITAT BOULDERS ARE TO BE DONE UNDER THE DIRECTION OF THE ENGINEER.
2. SUCCESSIVE DOWNSTREAM BOULDER SHOULD BE PLACED AT THE PERIPHERY OF THE WAKE OF UPSTREAM BOULDERS.

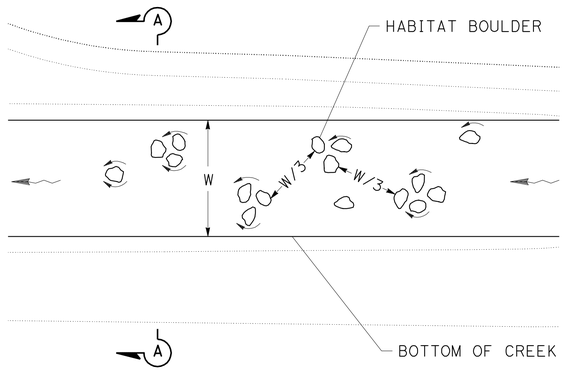

PLAN

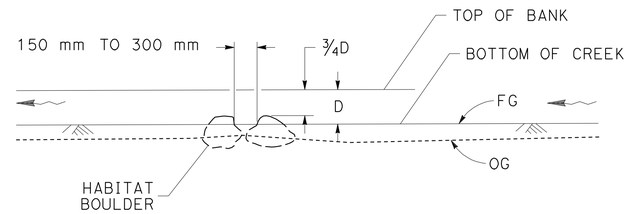

PROFILE

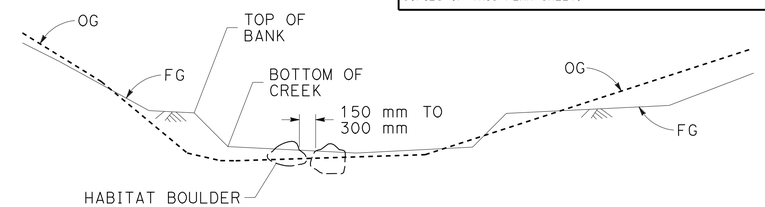

SECTION A-A

HABITAT BOULDER

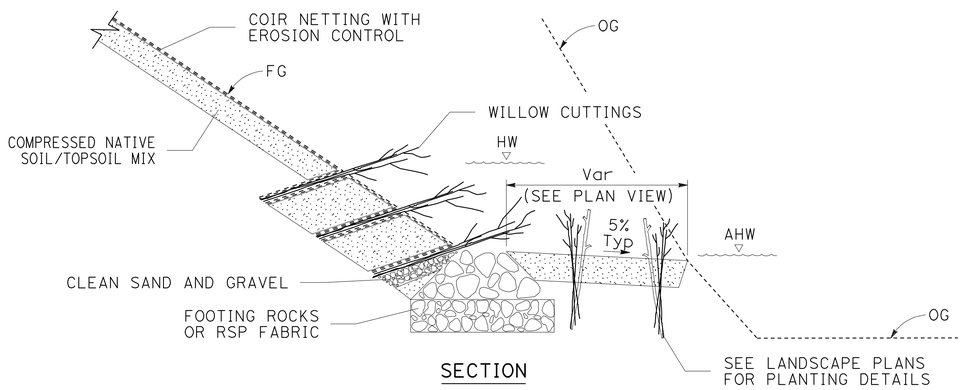

SECTION

MODIFED LONGITUDINAL STONE TOE WITH BRUSH LAYERING

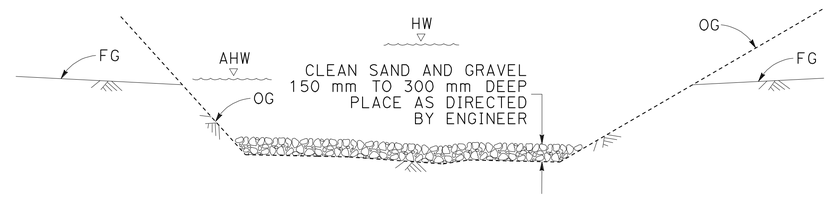

PLACING CLEAN SAND & GRAVEL IN EXISTING STREAMBED

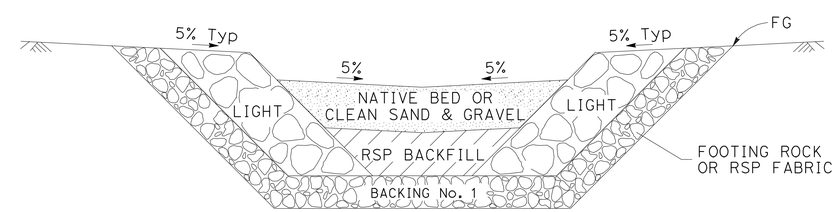

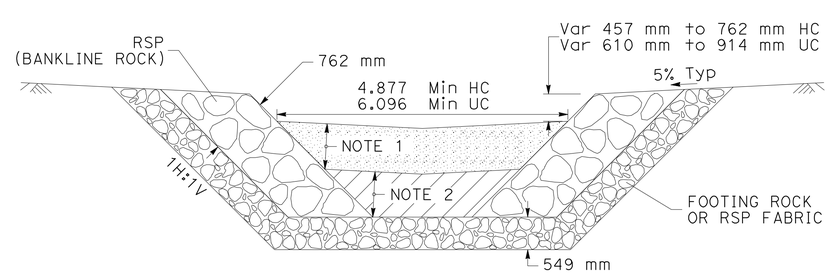

NOTES
1. FOR HAEHL CREEK 762 mm, UPP CREEK 762 mm.
2. FOR HAEHL CREEK 762 mm, UPP CREEK 762 mm.

TYPICAL BANKLINE ROCK & ENGINEERED STREAMBED MATERIAL

LIGHT

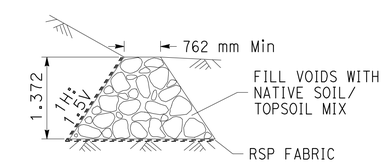

1/4T

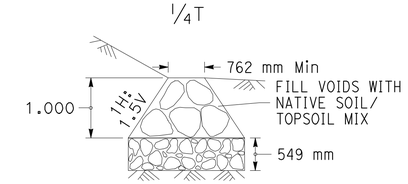

SECTION

LONGITUDINAL STONE TOE DETAIL

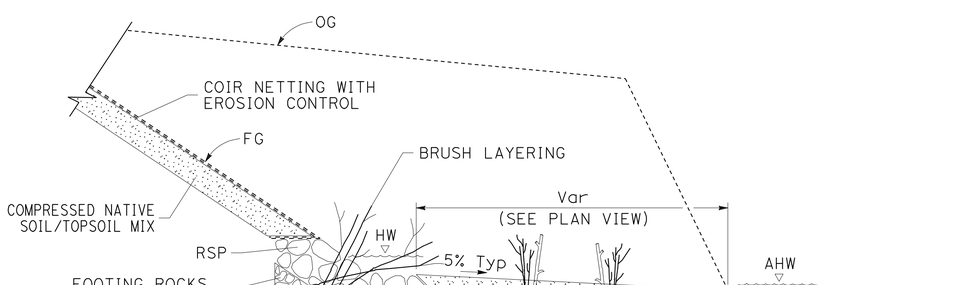

SECTION

MODIFED VEGETATED RIPRAP

APPROVED FOR FISH PASSAGE WORK ONLY.

ALL DIMENSIONS ARE IN METERS UNLESS OTHERWISE SHOWN.

DRAINAGE DETAILS

NO SCALE

DD-52

DGK	12-31-09		
BMM	05-30-11		
REVISED BY	DATE REVISED		
SCOTT FOSTER		CALCULATED-DESIGNED BY	
KAO THAO		CHECKED BY	
FUNCTIONAL SUPERVISOR			
DOUGLAS S. JONES			

STATE OF CALIFORNIA - DEPARTMENT OF TRANSPORTATION
Caltrans 03-DESIGN EAST

LAST REVISION 08-12-11 DATE PLOTTED => 28-JAN-2012 TIME PLOTTED => 06:10

Dist	COUNTY	ROUTE	KILOMETER POST TOTAL PROJECT	SHEET No.	TOTAL SHEETS
01	Men	101	R69.4/R78.9	386	939

REGISTERED CIVIL ENGINEER 9-22-11 DATE

1-23-12
PLANS APPROVAL DATE

REGISTERED PROFESSIONAL ENGINEER MITCH ANDRUS No. C48753 Exp. 9-30-12 CIVIL STATE OF CALIFORNIA

THE STATE OF CALIFORNIA OR ITS OFFICERS OR AGENTS SHALL NOT BE RESPONSIBLE FOR THE ACCURACY OR COMPLETENESS OF ELECTRONIC COPIES OF THIS PLAN SHEET.

NOTES:

1. THE INSIDE AND OUTSIDE SURFACES OF THE RCB ROOF SHALL BE MARKED "TOP".
2. H MINIMUM SHALL EQUAL THE WALL THICKNESS. H MAXIMUM SHALL BE 200 mm FOR SPANS THROUGH 2.4 m AND 355 mm FOR SPANS OVER 2.4 m.
3. QUANTITIES ARE APPROXIMATE AND FOR DESIGN PURPOSES ONLY.
4. FOR DESIGN AND DETAILS NOT SHOWN SEE SHEET DD-54, "PRECAST RCB CULVERT, MISCELLANEOUS DETAILS".
5. FOR EXTERNAL SEALING BAND APPLICATIONS SEE SHEET DD-55, "PRECAST RCB CULVERT, EXCAVATION AND BACKFILL DETAILS".

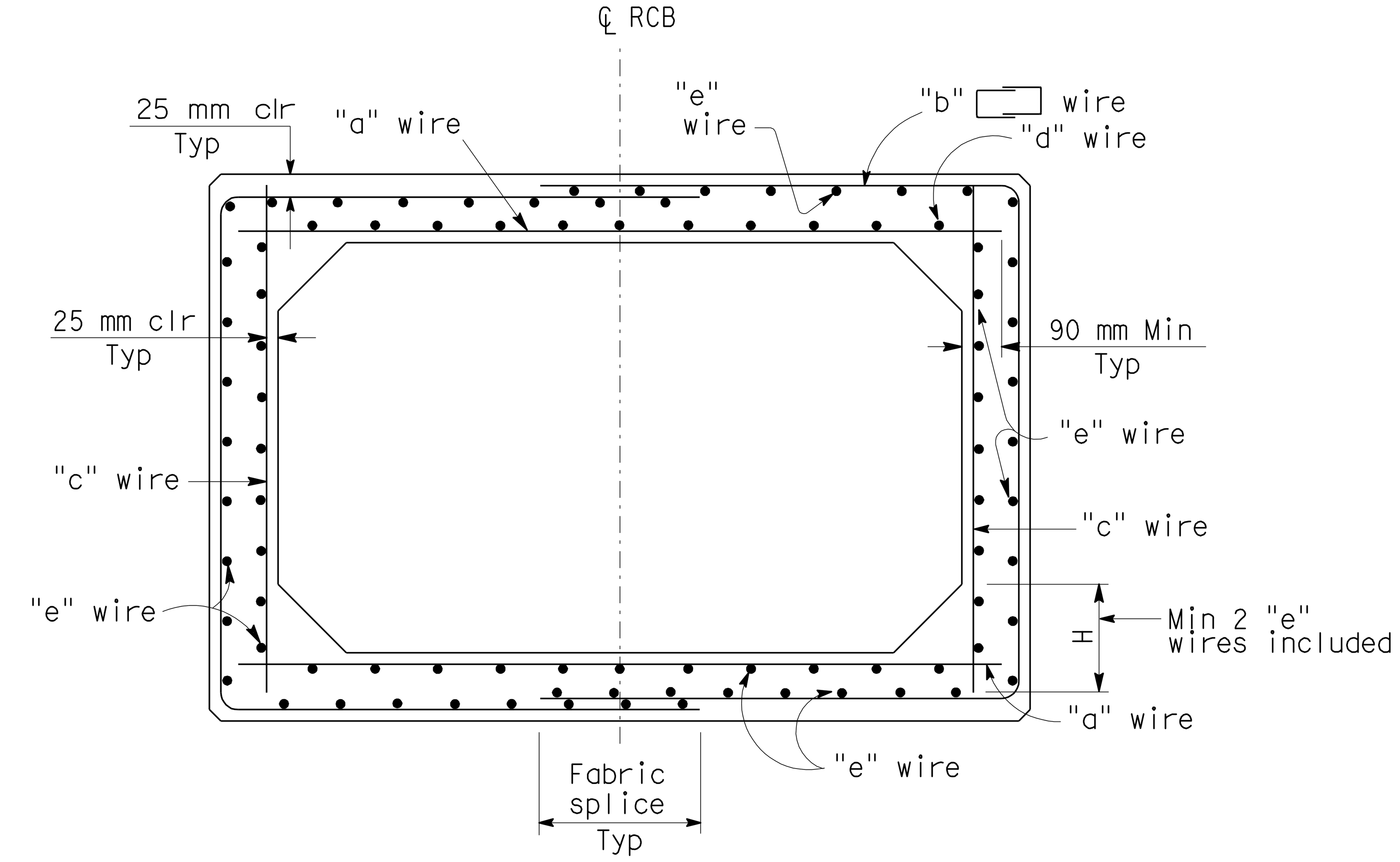

TYPICAL SECTION - SPANS 1.2 m THRU 3.7 m

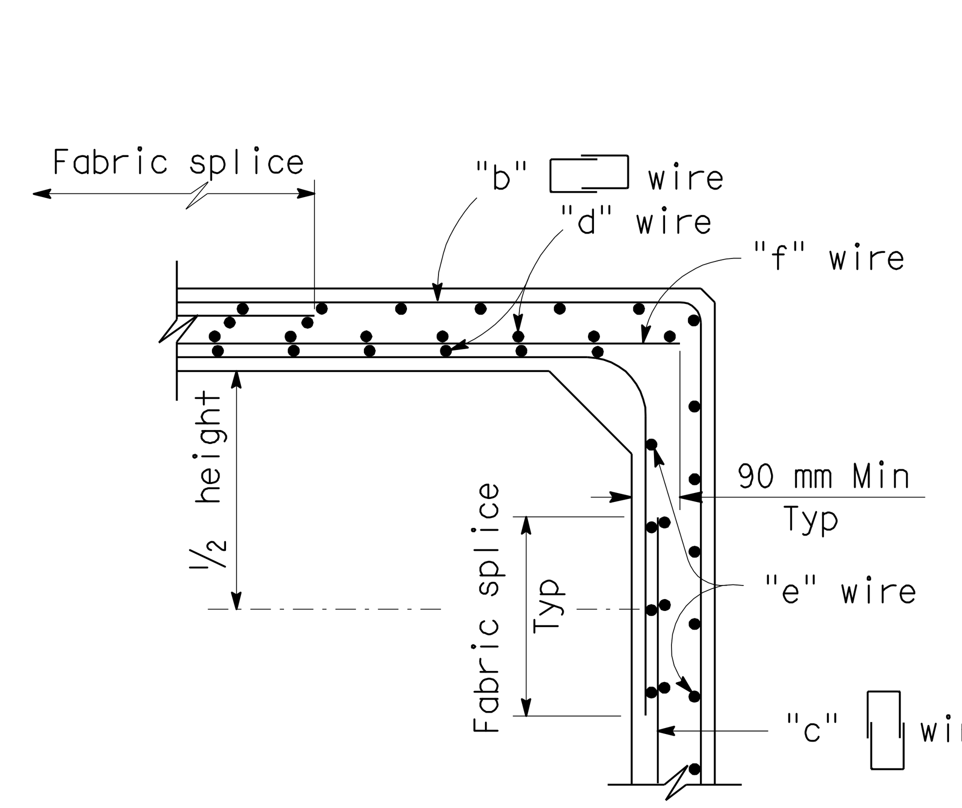

ALTERNATIVE DETAILING OPTION

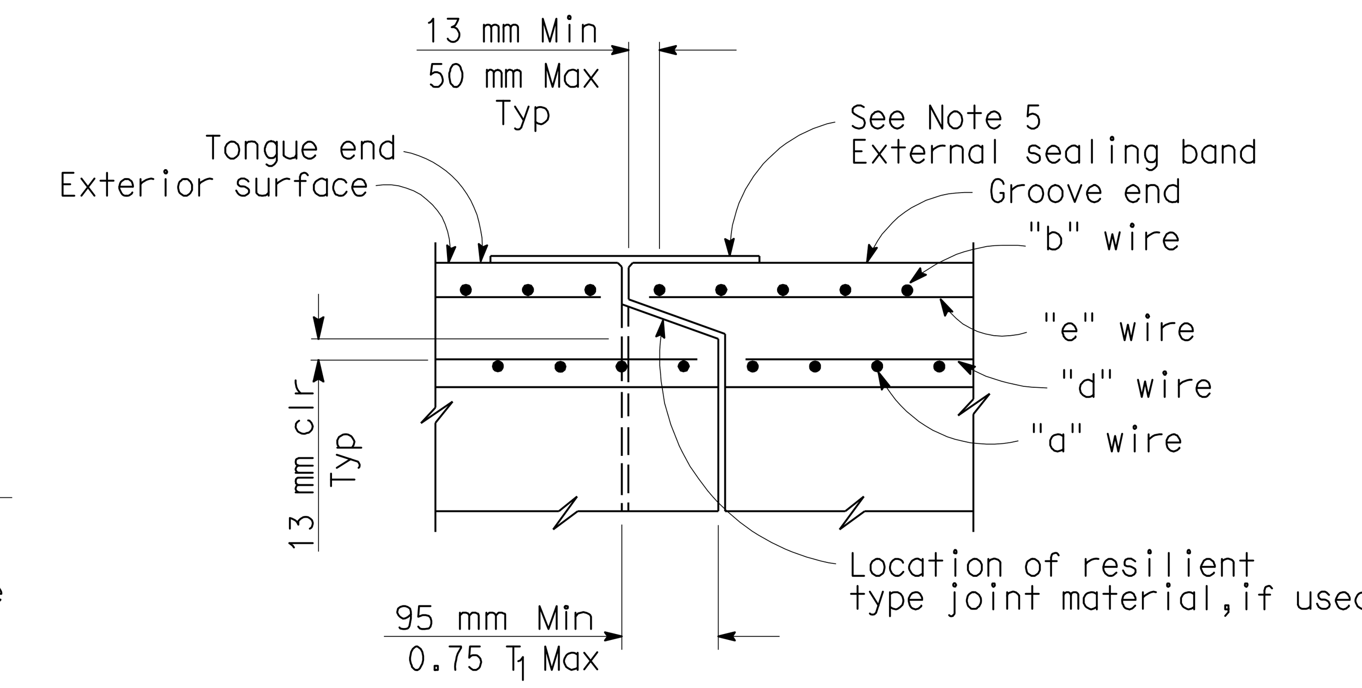

END JOINT DETAIL

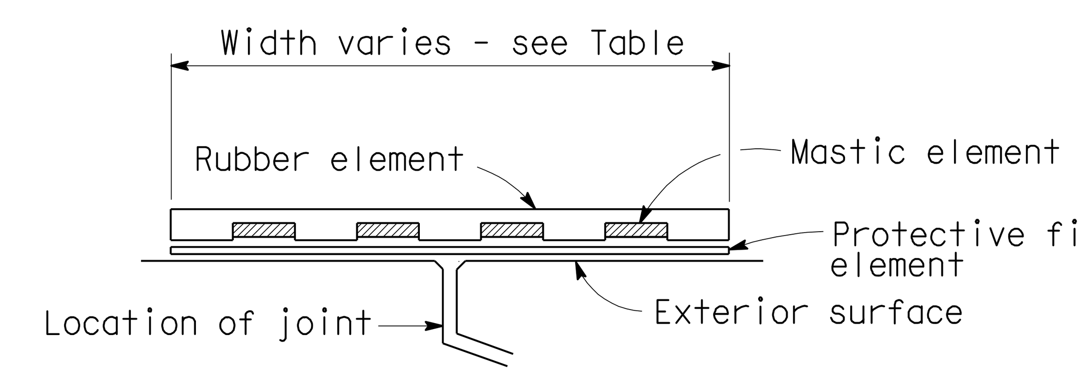

EXTERNAL SEALING BAND SCHEMATIC

TABLE	
SPAN (m)	EXTERNAL SEALING BAND WIDTH (mm)
1.2 m-1.8 m	230
2.1 m-2.4 m	280
3 m-3.7 m	330

DESIGN BEARING PRESSURE (MPa)		
SPAN \ COVER	3 m	6 m
1.2 m thru 2.4 m	0.11	0.19
3 m thru 3.7 m	0.12	0.20

DRAINAGE SYSTEM No.

22, 49, 53, 54

REINFORCE CONCRETE BOX

NO SCALE

AASHTO STANDARD SHAPE		M259						M273					
SPAN (m)		1.2						1.2					
HEIGHT (m)		0.6		0.9		1.2		0.6		0.9		1.2	
Maximum earth cover (m)		3.0	6.0	3.0	6.0	3.0	6.0	3.0	6.0	3.0	6.0	3.0	6.0
Concrete (mm) Roof	T_1	125	125	125	125	125	125	190	190	190	190	190	190
Concrete (mm) Side wall	T_2	125	125	125	125	125	125	125	125	125	125	125	125
Concrete (mm) Invert	T_3	125	125	125	125	125	125	150	150	150	150	150	150
Minimum welded wire fabric Reinf areas (Square mm/m)	"a"	870	870	910	910	955	955	615	615	655	655	655	655
	"b"	760	530	675	570	675	740	295	485	320	595	425	785
	"c"	275	275	275	275	275	380	275	275	275	275	275	425
	"d"	445	275	465	275	485	275	320	275	340	275	340	275
	"e"	275	275	275	275	275	275	275	275	275	275	275	275
	"f"	595	595	635	635	675	570	340	340	380	380	380	235
* Quantity Conc	m^3/m	0.55		0.65		0.73		0.70		0.78		0.85	
* Quantity Reinf	kg/m	79	67	83	79	92	94	52	60	60	71	70	91

AASHTO STANDARD SHAPE		M259								M273							
SPAN (m)		1.5								1.5							
HEIGHT (m)		0.6		0.9		1.2		1.5		0.6		0.9		1.2		1.5	
Maximum earth cover (m)		3.0	6.0	3.0	6.0	3.0	6.0	3.0	6.0	3.0	6.0	3.0	6.0	3.0	6.0	3.0	6.0
Concrete (mm) Roof	T_1	150	150	150	150	150	150	150	150	205	205	205	205	205	205	205	205
Concrete (mm) Side wall	T_2	150	150	150	150	150	150	150	150	150	150	150	150	150	150	150	150
Concrete (mm) Invert	T_3	150	150	150	150	150	150	150	150	180	180	180	180	180	180	180	180
Minimum welded wire fabric Reinf areas (Square mm/m)	"a"	805	805	870	870	890	890	910	910	655	655	700	700	720	720	720	720
	"b"	720	635	655	655	635	740	635	910	380	570	340	635	400	740	530	955
	"c"	275	275	275	275	275	275	295	485	275	275	275	275	275	275	295	530
	"d"	360	275	400	275	400	275	425	275	295	275	320	275	340	275	340	275
	"e"	275	275	275	275	275	275	275	275	275	275	275	275	275	275	275	275
	"f"	530	530	595	595	615	615	615	425	380	380	425	425	445	445	425	190
* Quantity Conc	m^3/m	0.80		0.88		0.98		1.08		0.93		1.03		1.10		1.20	
* Quantity Reinf	kg/m	83	77	91	86	97	100	106	124	63	70	67	82	77	95	92	122

AASHTO STANDARD SHAPE		M259								M273							
SPAN (m)		1.8								1.8							
HEIGHT (m)		0.9		1.2		1.5		1.8		0.9		1.2		1.5		1.8	
Maximum earth cover (m)		3.0	6.0	3.0	6.0	3.0	6.0	3.0	6.0	3.0	6.0	3.0	6.0	3.0	6.0	3.0	6.0
Concrete (mm) Roof	T_1	180	180	180	180	180	180	180	180	205	205	205	205	205	205	205	205
Concrete (mm) Side wall	T_2	180	180	180	180	180	180	180	180	180	180	180	180	180	180	180	180
Concrete (mm) Invert	T_3	180	180	180	180	180	180	180	180	180	180	180	180	180	180	180	180
Minimum welded wire fabric Reinf areas (Square mm/m)	"a"	825	825	870	870	890	890	890	890	760	805	785	845	805	845	805	825
	"b"	635	760	615	805	615	930	740	1100	485	760	530	825	615	930	740	1100
	"c"	295	295	295	295	295	295	360	615	295	295	295	295	295	295	380	615
	"d"	340	275	360	275	380	275	380	275	320	275	340	275	340	275	340	275
	"e"	275	275	275	275	275	275	275	275	275	275	275	275	275	275	275	275
	"f"	530	530	570	570	595	595	530	275	465	510	485	550	510	550	425	210
* Quantity Conc	m^3/m	1.18		1.28		1.38		1.48		1.23		1.33		1.43		1.56	
* Quantity Reinf	kg/m	100	106	107	121	116	134	134	164	89	107	100	121	112	132	131	161

AASHTO STANDARD SHAPE		M259 AND M273										M259 AND M273									
SPAN (m)		2.1										2.4									
HEIGHT (m)		0.9		1.2		1.5		1.8		2.1		1.2		1.5		1.8		2.1		2.4	
Maximum earth cover (m)		3.0	6.0	3.0	6.0	3.0	6.0	3.0	6.0	3.0	6.0	3.0	6.0	3.0	6.0	3.0	6.0	3.0	6.0	3.0	6.0
Concrete (m)	$T_1=T_2=T_3$	205	205	205	205	205	205	205	205	205	205	205	205	205	205	205	205	205	205	205	205
Minimum welded wire fabric Reinf areas (Square mm/m)	"a"	825	930	845	995	890	1015	890	1015	910	1015	950	1250	995	1290	1015	1310	1015	1310	1035	1290
	"b"	655	890	635	910	635	995	740	1120	890	1310	720	1165	785	1230	870	1335	995	1505	1165	1735
	"c"	340	340	340	340	340	340	340	380	465	740	340	340	340	340	340	340	380	570	615	995
	"d"	320	275	340	275	340	275	340	275	340	275	340	275	360	275	360	275	360	275	380	275
	"e"	275	275	275	275	275	275	275	275	275	275	275	275	275	275	275	275	275	275	275	275
	"f"	485	595	510	655	550	675	550	635	445	275	615	910	655	955	675	975	635	740	425	295
* Quantity Conc	m^3/m	1.48		1.60		1.73		1.85		1.98		1.73		1.85		1.98		2.10		2.23	
* Quantity Reinf	kg/m	115	133	122	145	125	153	145	180	170	217	143	185	158	208	175	222	195	254	232	305

AASHTO STANDARD SHAPE		M259 AND M273												M259 AND M273													
SPAN (m)		3.0												3.7													
HEIGHT (m)		1.5		1.8		2.1		2.4		2.7		3.0		1.8		2.1		2.4		2.7		3.0		3.4		3.7	
Maximum earth cover (m)		3.0	6.0	3.0	6.0	3.0	6.0	3.0	6.0	3.0	6.0	3.0	6.0	3.0	6.0	3.0	6.0	3.0	6.0	3.0	6.0	3.0	6.0	3.0	6.0	3.0	6.0
Concrete (m)	$T_1=T_2=T_3$	255	255	255	255	255	255	255	255	255	255	255	255	305	305	305	305	305	305	305	305	305	305	305	305	305	305
Minimum welded wire fabric Reinf areas (Square mm/m)	"a"	950	1500	975	1565	975	1590	995	1610	995	1590	995	1565	1080	1800	1100	1840	1120	1885	1145	1905	1145	1905	1145	1885	1120	1865
	"b"	955	1420	995	1480	1060	1565	1165	1715	1315	1905	1505	2160	1120	1695	1165	1755	1230	1840	1335	1970	1460	2140	1630	2370	1820	2625
	"c"	445	445	445	445	445	445	445	445	570	845	845	1270	530	530	530	530	530	530	530	530	530	740	805	1145	1080	1610
	"d"	320	275	320	275	320	275	320	275	320	275	320	275	320	275	320	275	340	275	340	275	340	275	340	275	340	275
	"e"	275	275	275	275	275	275	275	275	275	275	275	275	275	275	275	275	275	275	275	275	275	275	275	275	275	275
	"f"	510	1060	530	1120	530	1145	550	1165	425	740	150	295	550	1270	570	1310	595	1355	615	1375	615	1165	340	740	45	255
* Quantity Conc	m^3/m	2.70		2.85		3.00		3.20		3.35		3.50		3.90		4.10		4.26		4.47		4.65		4.85		5.00	
* Quantity Reinf	kg/m	198	265	213	288	228	305	250	340	280	440	330	452	260	360	275	385	295	410	320	442	347	490	395	555	450	635

* See Note 3

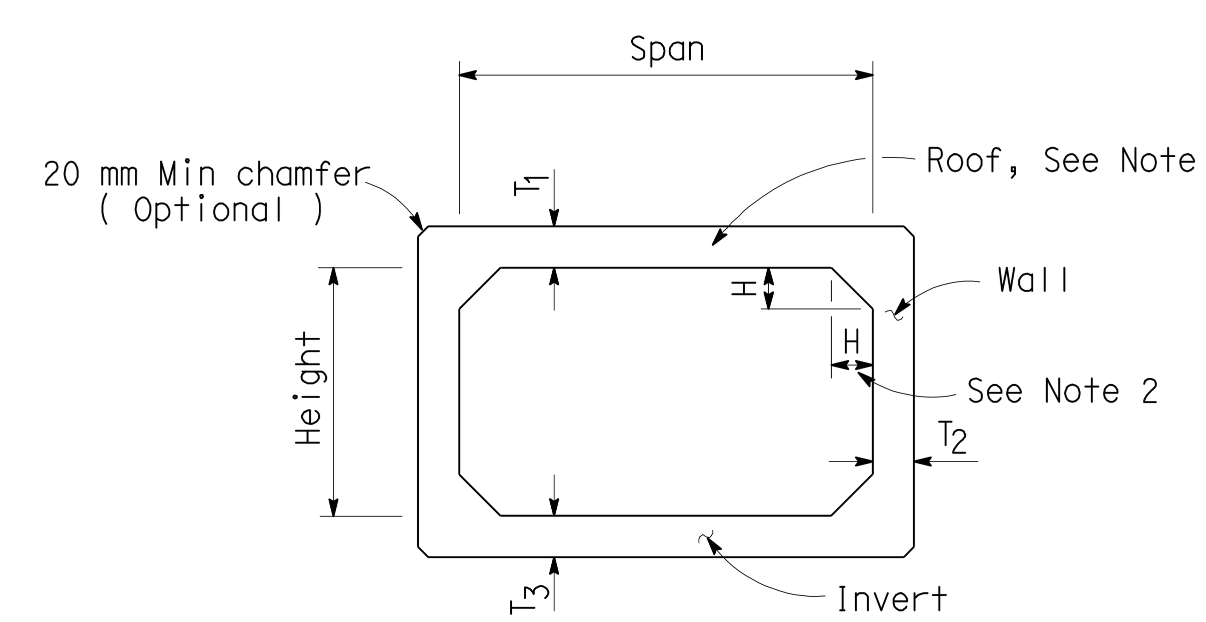

SCHEMATIC

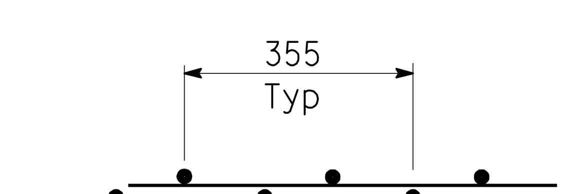

FABRIC SPLICE DETAIL

CULVERT - PRECAST RCB REINFORCEMENT AND DESIGN TABLES

ALL DIMENSIONS ARE IN METERS UNLESS OTHERWISE SHOWN.

DRAINAGE DETAILS

NO SCALE

DD-53

STATE OF CALIFORNIA - DEPARTMENT OF TRANSPORTATION
03-DESIGN EAST

FUNCTIONAL SUPERVISOR: DOUGLAS S. JONES
CALCULATED-DESIGNED BY: KAO THAO
CHECKED BY: SCOTT FOSTER
REVISED BY: MGA
DATE REVISED: 05-30-11

LAST REVISION 05-30-11
DATE PLOTTED => 28-JAN-2012
TIME PLOTTED => 06:10

Dist	COUNTY	ROUTE	KILOMETER POST TOTAL PROJECT	SHEET No.	TOTAL SHEETS
01	Men	101	R69.4/R78.9	387	939

Mitch Andrus 9-22-11
REGISTERED CIVIL ENGINEER DATE

1-23-12
PLANS APPROVAL DATE

REGISTERED PROFESSIONAL ENGINEER MITCH ANDRUS No. C48753 Exp. 9-30-12 CIVIL STATE OF CALIFORNIA

THE STATE OF CALIFORNIA OR ITS OFFICERS OR AGENTS SHALL NOT BE RESPONSIBLE FOR THE ACCURACY OR COMPLETENESS OF ELECTRONIC COPIES OF THIS PLAN SHEET.

Caltrans Metric

DESIGN NOTES:

Specifications:

Design: Bridge Design Specifications (1983 AASHTO Specifications with revisions by Caltrans). Depth of cover is assumed to be uniform.

Earth Load:

Earth pressures for two conditions:
2240 kg/m³ vert, 670 kg/m³ horiz
2240 kg/m³ vert, 2240 kg/m³ horiz

Unit Stresses:

f'c = 35 MPa
f'y = 450 MPa for weld wire fabric
n = 7

Shear:

Maximum allowable shear, $v=0.291\sqrt{f'c,MPa}$

Exclusion:

Axial loading on the members has not been considered.

Earthwork:

See "Precast RCB Culvert, Excavation and Backfill Details" Sheets.

GENERAL NOTES:

Designation:

Standard single or multiple precast box culverts are shown on the plans as span times height with maximum cover over roof thus: 2.4 x 1.5 m RCB with 3 m or double 3 m x 1.5 m RCB with 6 m, followed by alternatives.

Alternatives:

Single cell:

Standard dimensions of AASHTO Material Specification 'M259' or 'M273'.

Multiple Cell:

Constructed by placing single cells adjacent to each other. Inlet and outlet ends of culvert will be rounded unless square ends are designated. Parapet will be shown unless designated in plans. Such designation may be different for inlet and outlet ends.

Limitations:

Where the overfill is less than 300 mm, Precast RCB culverts are not to be used. Precast RCB culverts are not to be used in siphon or pressurized installations unless appropriate "watertight" jointing is provided.

Special Reinforcement Coverage:

Precast RCB culvert standard details are not to be used in a corrosive environment or where there is a severe abrasive flow condition or freeze-thaw locations.

Special design:

Required for culvert with different conditions, or loads or design bearing pressures greater than those given on these plans. Required for culverts where end details need higher skew angles or higher parapets or barrier sections.

CONSTRUCTION NOTES:

Cutoff Walls:

1.2 m Cutoff walls are to be provided at inlet and/or outlet unless channel is lined and unless otherwise shown. These walls are to be extended if scour conditions warrant. See Standard Plans D84, D85 and D86A.

Wingwalls:

Wingwalls shall be cast-in-place and shall conform to standard plan details for box culvert wingwalls. See Standard Plans D84, D85 and D86A.

Earthwork:

See "Precast RCB Culvert, Excavation and Backfill Details" sheet.

Construction Loads:

Strutting may be required near temporary ends. For construction loads on culverts, See Standard Plan D88.

Parapet "P" Bars			
Span \ Skew Angle	0° to 15°	16° to 30°	31° to 45°
1.2 m	#16	#16	#16
1.8 m	#16	#16	*
2.4 m	#16	#16	*
3 m	#16	*	*
3.7 m	#19	*	*

PARAPET REINFORCEMENT

* Design limited by skew of precast reinforced concrete box section

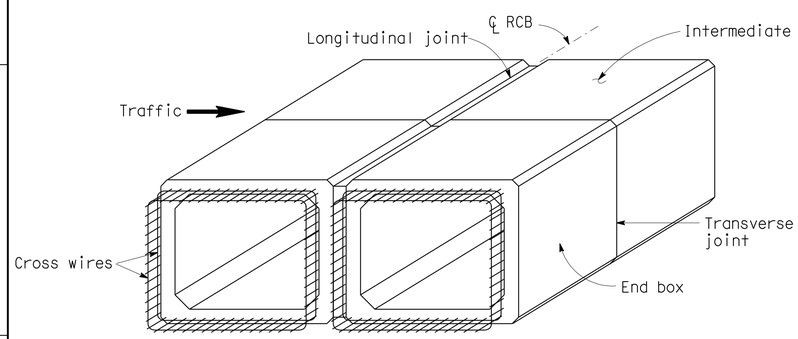

PRECAST RCB TERMINOLOGY

NOTE: Inner and outer reinforcement to be exposed as required to tie to cast-in-place construction. A minimum of two cross wires shall be exposed on all sides.

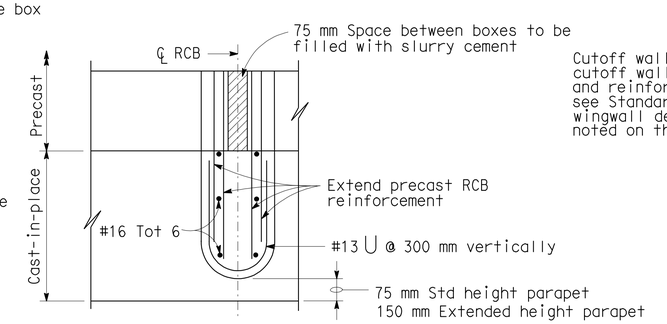

PARTIAL PLAN INTERIOR WALL MULTI CELL CULVERT

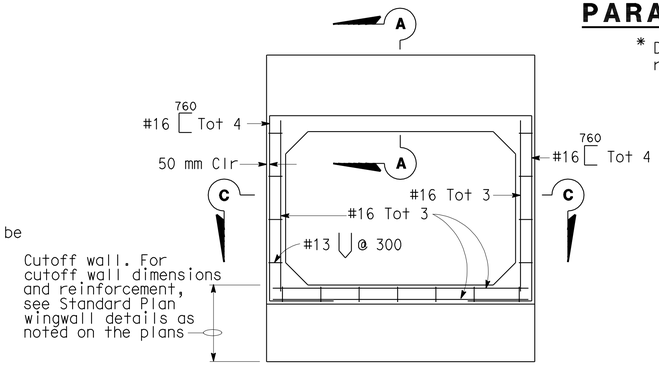

CAST-IN-PLACE END ELEVATION

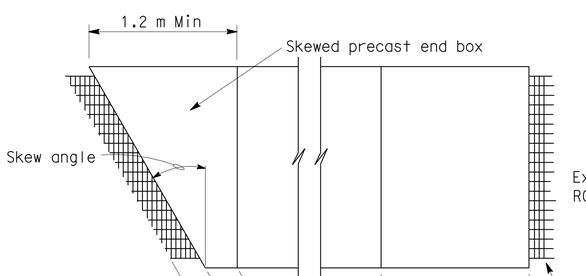

PARTIAL PLAN VIEW

For illustrative purposes only.
For correct skew direction see plans.

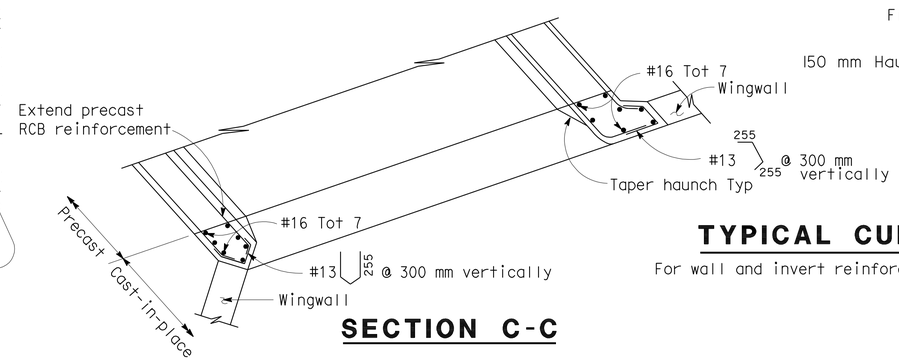

SECTION C-C

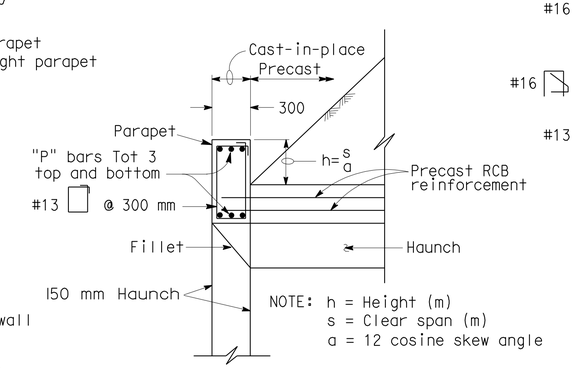

SECTION A-A

(Standard Height Parapet)

TYPICAL CULVERT END DETAILS

For wall and invert reinforcement not shown, See "End Elevation" detail.

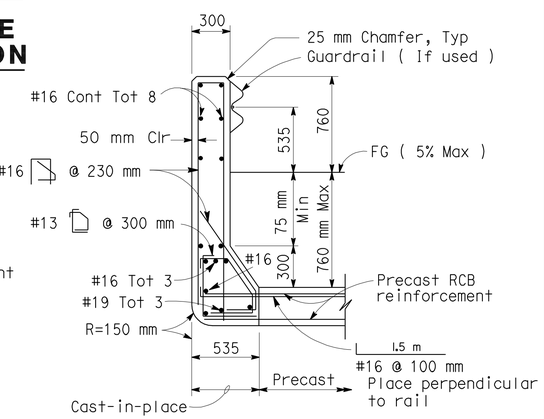

SECTION A-A

(Extended Height Parapet)

CULVERT - PRECAST RCB MISCELLANEOUS DETAILS

ALL DIMENSIONS ARE IN METERS UNLESS OTHERWISE SHOWN.

DRAINAGE DETAILS

NO SCALE

DD-54

STATE OF CALIFORNIA - DEPARTMENT OF TRANSPORTATION
Caltrans 03-DESIGN EAST

FUNCTIONAL SUPERVISOR: DOUGLAS S. JONES
CALCULATED-DESIGNED BY: KAO THAO
CHECKED BY: SCOTT FOSTER
REVISED BY: MGA
DATE REVISED: 05-30-11

LAST REVISION 05-30-11
DATE PLOTTED => 28-JAN-2012
TIME PLOTTED => 06:11

Dist	COUNTY	ROUTE	KILOMETER POST TOTAL PROJECT	SHEET No.	TOTAL SHEETS
01	Men	101	R69.4/R78.9	388	939

Mitch Andrus 9-22-11
REGISTERED CIVIL ENGINEER DATE

1-23-12
PLANS APPROVAL DATE

REGISTERED PROFESSIONAL ENGINEER MITCH ANDRUS No. C48753 Exp. 9-30-12 CIVIL STATE OF CALIFORNIA

THE STATE OF CALIFORNIA OR ITS OFFICERS OR AGENTS SHALL NOT BE RESPONSIBLE FOR THE ACCURACY OR COMPLETENESS OF ELECTRONIC COPIES OF THIS PLAN SHEET.

Caltrans Metric

NOTES:

1. Slope or shore excavation sides as necessary.
2. Dimensions shown are minimum.
3. Method 2 and 3 for single or multiple boxes requires an approved external sealing band. See "Precast RCB Culvert, Reinforcement and Design Tables" sheet.
4. Construction of Roadway Structural Section in Method 2 or Method 3 shall not disturb the external sealing band installation.

LEGEND:

- Structure excavation (Culvert)
- Structure backfill (Culvert) 95% relative compaction
- Roadway embankment
- Slurry cement backfill
- Sand bedding (Culvert)
- Roadway structural section
- Original ground

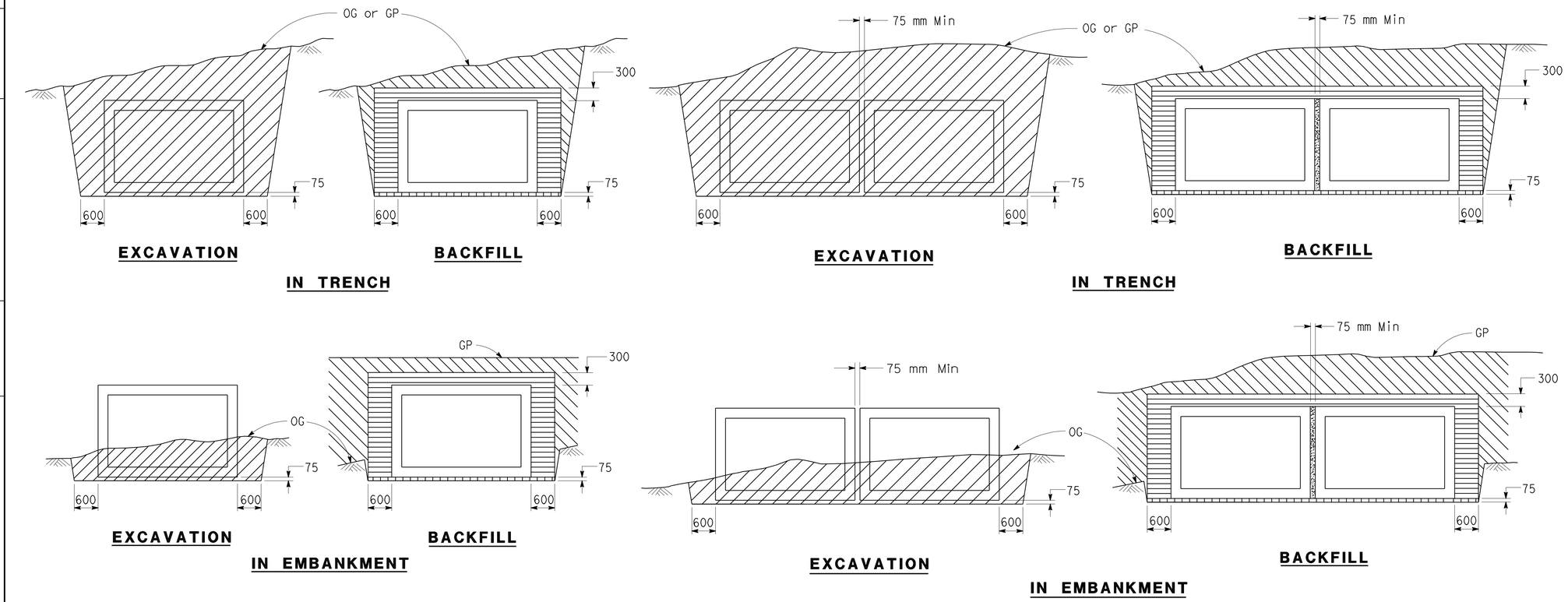

FILL HEIGHT GREATER THAN 600 mm

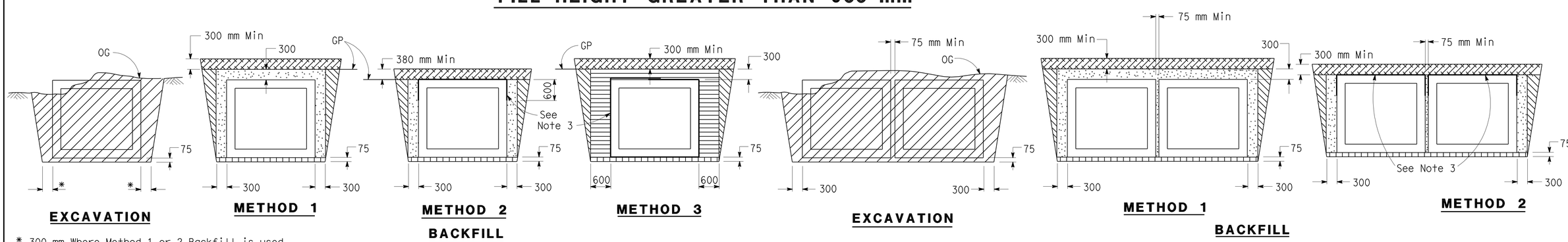

* 300 mm Where Method 1 or 2 Backfill is used.
600 mm Where Method 3 Backfill is used.

FILL HEIGHT 600 mm OR LESS

CULVERT - PRECAST RCB
EXCAVATION AND BACKFILL DETAILS

ALL DIMENSIONS ARE IN METERS UNLESS OTHERWISE SHOWN.

DRAINAGE DETAILS

NO SCALE

DD-55

MGA	05-30-11
REVISED BY	DATE REVISED
KAO THAO	SCOTT FOSTER
CALCULATED-DESIGNED BY	CHECKED BY
FUNCTIONAL SUPERVISOR	DOUGLAS S. JONES

STATE OF CALIFORNIA - DEPARTMENT OF TRANSPORTATION
Caltrans 03-DESIGN EAST

LAST REVISION 05-30-11 | DATE PLOTTED => 28-JAN-2012 | TIME PLOTTED => 06:11

NOTES:

1. ALLOWABLE ALTERNATIVES FOR APC & AFES FOR ALL DRAINAGE SYSTEMS ON SHEET D-1 TO D-33 ARE LISTED ON THIS SHEET.
2. SEE SHEET DQ-18 FOR DETENTION BASIN QUANTITIES.
3. SEE SHEET DQ-18 FOR BRIDGE RSP QUANTITIES.
4. SEE STRUCTURE PLANS FOR ADDITIONAL QUANTITIES.

ABBREVIATIONS

CFES - CONCRETE FLARED END SECTION
DB - DETENTION BASIN
(N) - NOT A SEPARATE PAY ITEM, FOR INFORMATION ONLY.
T - Tonne
P - POSITIVE JOINT CLASSIFICATION
S - STANDARD JOINT CLASSIFICATION

LEGEND

DRAINAGE SYSTEM NUMBER
TEMPORARY DRAINAGE SYSTEM NUMBER
DRAINAGE DETENTION BASIN NUMBER
DRAINAGE UNIT

Caltrans Metric

Dist	COUNTY	ROUTE	KILOMETER POST TOTAL PROJECT	SHEET No.	TOTAL SHEETS
01	Men	101	R69.4/R78.9	389	939

Mitch Andrus 9-22-11
REGISTERED CIVIL ENGINEER DATE

1-23-12
PLANS APPROVAL DATE

REGISTERED PROFESSIONAL ENGINEER MITCH ANDRUS No. C48753 Exp. 9-30-12 CIVIL STATE OF CALIFORNIA

THE STATE OF CALIFORNIA OR ITS OFFICERS OR AGENTS SHALL NOT BE RESPONSIBLE FOR THE ACCURACY OR COMPLETENESS OF ELECTRONIC COPIES OF THIS PLAN SHEET.

DRAINAGE QUANTITIES

REMOVE ITEMS								Misc ITEMS							CONCRETE AND STEEL						APC				AFES				RCP		CFES	RSP										JACKED PIPE								
	ABANDON CULVERT	ABANDON RCB	REMOVE RCB CULVERT	REMOVE WINGWALL	REMOVE CULVERT	REMOVE INLET	REMOVE FES	REMOVE HEADWALL	NPS 6 SUPPLY LINE (BRIDGE)	(N) SLURRY BACKFILL	(N) MINOR CONCRETE	CABLE RAILING	MISCELLANEOUS IRON AND STEEL	DRAINAGE INLET MARKER (STAMPED CONCRETE INLET)	DRAINAGE INLET MARKER (PLASTIC)	CLASS 2 CONCRETE (WINGWALLS)	CLASS 1 CONCRETE (BOX CULVERT)	MINOR CONCRETE (MINOR STRUCTURE)	MINOR CONCRETE (MISCELLANEOUS CONSTRUCTION)	BAR REINFORCING STEEL (WINGWALLS)	BAR REINFORCING STEEL (BOX CULVERT)	450 mm ALTERNATIVE PIPE CULVERT	600 mm ALTERNATIVE PIPE CULVERT	900 mm ALTERNATIVE PIPE CULVERT	1200 mm ALTERNATIVE PIPE CULVERT	450 mm ALTERNATIVE FLARED END SECTION	600 mm ALTERNATIVE FLARED END SECTION	900 mm ALTERNATIVE FLARED END SECTION	1200 mm ALTERNATIVE FLARED END SECTION	900 mm REINFORCED CONCRETE PIPE	1050 mm REINFORCED CONCRETE PIPE	900 mm CONCRETE FLARED END SECTION	CLEAN SAND AND GRAVEL	RSP (BACKING No. 1, METHOD B)	RSP (LIGHT, METHOD B)	RSP (1/4 T, METHOD B)	RSP (1/2 T, METHOD A)	RSP (1 T, METHOD B)	RSP FABRIC	(N) PERMEABLE MATERIAL	(N) PERMEABLE MATERIAL FABRIC	900 mm REINFORCED CONCRETE PIPE (CLASS III)	1200 mm REINFORCED CONCRETE PIPE (CLASS III)	80 mm PLASTIC PIPE (OUTLET)	DRAINAGE PLAN SHEET No.	DRAINAGE PROFILE No.	DRAINAGE SYSTEM No.	DRAINAGE UNIT	STATION	DESCRIPTION
m	EA	EA	EA	m	EA	EA	EA	m	m^3	m^3	m	kg	EA	EA	m^3	m^3	m^3	m^3	kg	kg	m	m	m	m	EA	EA	EA	EA	m	m	EA	m^3	m^3	m^3	m^3	m^3	m^3	m^2	m^3	m^2	m	m	m						
												85					0.86																				0.34	3.68				1	1	1	a	"A" 96+65.876	Mod G1-DI (H=1.22) GRATE TYPE 600-13
												85					0.86																				0.34	3.68							b		Mod G1-DI (H=1.22) GRATE TYPE 600-13
													1					2.08																											c		CONCRETE APRON (Dbl G1-DI)
																																	3.6			13.0									d		RSP (LIGHT, METHOD B)
												85					0.86																				0.34	3.68				2	1	2	a	"A" 98+49.578	Mod G1-DI (H=1.22) GRATE Type 600-13
												85					0.86																				0.34	3.68							b		Mod G1-DI (H=1.22) GRATE TYPE 600-13
													1					2.08																											c		CONCRETE APRON (Dbl G1-DI)
																																	23.7			86.1									d		RSP (LIGHT, METHOD B)
												85					1.19																				0.34	3.68				2	1	3	a	"A" 98+63.487	Mod G1-DI (H=1.83) GRATE TYPE 600-13
																																	6.5			21.0									b		RSP (LIGHT, METHOD B)
																																	6.3			24.6									c		RSP (LIGHT, METHOD B)
																		1.50																											d		CONCRETE APRON (G1-DI)
																																	4.9			15.6									a	"A" 100+00.326	RSP (LIGHT, METHOD B)
												85					0.86																				0.34	3.68				3	2	5	a	"U2" 101+57.578	Mod G1-DI (H=1.22) GRATE TYPE 600-13
												85					0.86																				0.34	3.68							b		Mod G1-DI (H=1.22) GRATE TYPE 600-13
													1					2.08																											c		CONCRETE APRON (Dbl G1-DI)
																																	4.1			14.6									d		RSP (LIGHT, METHOD B)
																																	15.0			57.3									e		RSP (LIGHT, METHOD B)
												85					1.18																				0.45	4.46				3	2	6	a	"A" 100+86.210	Mod G2-DI (H=1.22) GRATE TYPE 600-13
												85					1.18																				0.45	4.46							b		Mod G2-DI (H=1.22) GRATE TYPE 600-13
																																	2.2			9.6									c		RSP (LIGHT, METHOD B)
													1					2.17																											d		CONCRETE APRON (Dbl G2-DI)
																																	12.7			37.6									e		RSP (LIGHT, METHOD B)
						1																																			3	3	7	a	"U" 102+76.434	REMOVE FES
																						2.25																							b		600 mm APC
												85					5.29																												c		G2-DI (H=3.69) GRATE TYPE 600-13
																						30.48																							d		600 mm APC
													1					1.83																											e		CONCRETE APRON (G2-DI)
																																	33.3			110.9									f		RSP (LIGHT, METHOD B)
																										1																			g		600 mm AFES
						1						850	5				14.00	11.74				32.73				1							112.3			390.3	3.28	34.68				SHEET TOTAL					

DRAINAGE QUANTITIES
DQ-1

STATE OF CALIFORNIA - DEPARTMENT OF TRANSPORTATION
Caltrans 03-DESIGN EAST

FUNCTIONAL SUPERVISOR: DOUGLAS S. JONES
CALCULATED-DESIGNED BY: KAO THAO
CHECKED BY: SCOTT FOSTER
REVISED BY: MGA
DATE REVISED: 05-30-11

LAST REVISION 11-30-11
DATE PLOTTED => 28-JAN-2012
TIME PLOTTED => 06:33

Dist	COUNTY	ROUTE	KILOMETER POST TOTAL PROJECT	SHEET No.	TOTAL SHEETS
01	Men	101	R69.4/R78.9	390	939

Mitch Andrus 9-22-11
REGISTERED CIVIL ENGINEER DATE

1-23-12
PLANS APPROVAL DATE

REGISTERED PROFESSIONAL ENGINEER MITCH ANDRUS No. C48753 Exp. 9-30-12 CIVIL STATE OF CALIFORNIA

THE STATE OF CALIFORNIA OR ITS OFFICERS OR AGENTS SHALL NOT BE RESPONSIBLE FOR THE ACCURACY OR COMPLETENESS OF ELECTRONIC COPIES OF THIS PLAN SHEET.

Caltrans Metric

DRAINAGE QUANTITIES

		REMOVE ITEMS						Misc ITEMS							CONCRETE AND STEEL						APC				AFES				RCP		CFES	RSP									JACKED PIPE							
ABANDON CULVERT	ABANDON RCB CULVERT	REMOVE RCB CULVERT	REMOVE WINGWALL	REMOVE CULVERT	REMOVE INLET	REMOVE FES	REMOVE HEADWALL	NPS 6 SUPPLY LINE (BRIDGE)	(N) SLURRY BACKFILL	(N) MINOR CONCRETE	CABLE RAILING	MISCELLANEOUS IRON AND STEEL	DRAINAGE INLET MARKER (STAMPED CONCRETE INLET)	DRAINAGE INLET MARKER (PLASTIC)	CLASS 2 CONCRETE (WINGWALLS)	CLASS 1 CONCRETE (BOX CULVERT)	MINOR CONCRETE (MINOR STRUCTURE)	MINOR CONCRETE (MISCELLANEOUS CONSTRUCTION)	BAR REINFORCING STEEL (WINGWALLS)	BAR REINFORCING STEEL (BOX CULVERT)	450 mm ALTERNATIVE PIPE CULVERT	600 mm ALTERNATIVE PIPE CULVERT	900 mm ALTERNATIVE PIPE CULVERT	1200 mm ALTERNATIVE PIPE CULVERT	450 mm ALTERNATIVE FLARED END SECTION	600 mm ALTERNATIVE FLARED END SECTION	900 mm ALTERNATIVE FLARED END SECTION	1200 mm ALTERNATIVE FLARED END SECTION	900 mm REINFORCED CONCRETE PIPE	1050 mm REINFORCED CONCRETE PIPE	900 mm CONCRETE FLARED END SECTION	CLEAN SAND AND GRAVEL	RSP (BACKING No. 1, METHOD B)	RSP (LIGHT, METHOD B)	RSP (1/4 T, METHOD B)	RSP (1/2 T, METHOD A)	RSP (1 T, METHOD B)	RSP FABRIC	(N) PERMEABLE MATERIAL	(N) PERMEABLE MATERIAL FABRIC	900 mm REINFORCED CONCRETE PIPE (CLASS III)	1200 mm REINFORCED CONCRETE PIPE (CLASS III)	80 mm PLASTIC PIPE (OUTLET)	DRAINAGE PLAN SHEET No.	DRAINAGE PROFILE No.	DRAINAGE SYSTEM No.	DRAINAGE UNIT	STATION	DESCRIPTION
m	EA	EA	EA	m	EA	EA	EA	m	m^3	m^3	m	kg	EA	EA	m^3	m^3	m^3	m^3	kg	kg	m	m	m	m	EA	EA	EA	EA	m	m	EA	m^3	m^3	m^3	m^3	m^3	m^3	m^2	m^3	m^2	m	m	m						
				24.7																																							3	4	8	a	"A" 103+15.637	REMOVE CULVERT (300 mm)
																																		17.2									3	-	9	a	"U" 103+49.866	RSP (LIGHT, METHOD B)
												85					0.86																					0.34	3.68				4	4	10	a	"H" 97+61.705	Mod G1-DI (H=1.22) GRATE TYPE 600-13
													1					1.50																												b		CONCRETE APRON (G1-DI)
																																		3.0				11.8									c		RSP (LIGHT, METHOD B)
				18.2																																							4	4	11	a	"H" 97+96.641	REMOVE CULVERT (300 mm)
				30.3																																							4	5	12	a	"H" 98+20.354	REMOVE CULVERT (1200 mm)
																																		32.3				109.2									b		RSP (LIGHT, METHOD B)
																	1.19																										4	5	13	a	"U1" 105+52.500	G1-DI (H=1.83) GRATE TYPE 600-13
																	0.94																													b		G1-DI (H=1.37) GRATE TYPE 600-13
																					14.05																									c		450 mm APC
																		1.96																												d		CONCRETE APRON (G1-DI)
																		1.96																												e		CONCRETE APRON (G1-DI)
																						21.34																								f		600 mm APC
																	1.07																													g		MODIFIED PIPE HEADWALL (600 mm)
																																		13.8				46.9									h		RSP (LIGHT, METHOD B)
												85					1.97																										4	6	14	a	"U3" 107+50.000	Mod G2-DI (H=2.44) GRATE TYPE 600-13
												85					0.98																													b		G1-DI (H=0.91) GRATE TYPE 600-13
																					18.29																									c		450 mm APC
													1					1.67																												d		CONCRETE APRON (G2-DI)
													1					1.50																												e		CONCRETE APRON (G1-DI)
																						24.38																								f		600 mm APC
																	1.07																													g		MODIFIED PIPE HEADWALL (600 mm)
																																		13.5				46.1									h		RSP (LIGHT, METHOD B)
																						39.62																					5	7	15	a	"H" 99+25.000	600 mm APC
																									1																					b		600 mm AFES
																																		3.6				13.4									c		RSP (LIGHT, METHOD B)
																																		3.6				13.4									d		RSP (LIGHT, METHOD B)
																									1																					e		600 mm AFES
				29.4																																							5	7	16	a	"H" 99+13.145	REMOVE CULVERT (450 mm)
												85					1.19																										5	8	17	a	"U1" 106+30.000	G1-DI (H=1.83) GRATE TYPE 600-13
												85					1.19																													b		G1-DI (H=0.91) GRATE TYPE 600-13
																					20.67																									c		450 mm APC
													1					1.50																												d		CONCRETE APRON (G1-DI)
													1					1.50																												e		CONCRETE APRON (G2-DI)
																						18.29																								f		600 mm APC
																	1.07																													g		MODIFIED PIPE HEADWALL (600 mm)
																																		20.3				68.3									h		RSP (LIGHT, METHOD B)
				102.6								425	5				11.53	11.59			53.01	103.63			2								107.3				309.1	0.34	3.68				SHEET TOTAL					

STATE OF CALIFORNIA - DEPARTMENT OF TRANSPORTATION
Caltrans 03-DESIGN EAST

FUNCTIONAL SUPERVISOR: DOUGLAS S. JONES
CALCULATED-DESIGNED BY: KAO THAO
CHECKED BY: SCOTT FOSTER
REVISED BY: MGA
DATE REVISED: 05-30-11

DRAINAGE QUANTITIES
DQ-2

LAST REVISION 11-30-11
DATE PLOTTED => 28-JAN-2012
TIME PLOTTED => 06:11

Dist	COUNTY	ROUTE	KILOMETER POST TOTAL PROJECT	SHEET No.	TOTAL SHEETS
01	Men	101	R69.4/R78.9	391	939

Mitch Andrus 9-22-11
REGISTERED CIVIL ENGINEER DATE

1-23-12
PLANS APPROVAL DATE

REGISTERED PROFESSIONAL ENGINEER MITCH ANDRUS No. C48753 Exp. 9-30-12 CIVIL STATE OF CALIFORNIA

THE STATE OF CALIFORNIA OR ITS OFFICERS OR AGENTS SHALL NOT BE RESPONSIBLE FOR THE ACCURACY OR COMPLETENESS OF ELECTRONIC COPIES OF THIS PLAN SHEET.

Caltrans Metric

DRAINAGE QUANTITIES

		REMOVE ITEMS						Misc ITEMS							CONCRETE AND STEEL						APC				AFES				RCP		CFES	RSP									JACKED PIPE							
ABANDON CULVERT	ABANDON RCB	REMOVE RCB CULVERT	REMOVE WINGWALL	REMOVE CULVERT	REMOVE INLET	REMOVE FES	REMOVE HEADWALL	NPS 6 SUPPLY LINE (BRIDGE)	(N) SLURRY BACKFILL	(N) MINOR CONCRETE	CABLE RAILING	MISCELLANEOUS IRON AND STEEL	DRAINAGE INLET MARKER (STAMPED CONCRETE INLET)	DRAINAGE INLET MARKER (PLASTIC)	CLASS 2 CONCRETE (WINGWALLS)	CLASS 1 CONCRETE (BOX CULVERT)	MINOR CONCRETE (MINOR STRUCTURE)	MINOR CONCRETE (MISCELLANEOUS CONSTRUCTION)	BAR REINFORCING STEEL (WINGWALLS)	BAR REINFORCING STEEL (BOX CULVERT)	450 mm ALTERNATIVE PIPE CULVERT	600 mm ALTERNATIVE PIPE CULVERT	900 mm ALTERNATIVE PIPE CULVERT	1200 mm ALTERNATIVE PIPE CULVERT	450 mm ALTERNATIVE FLARED END SECTION	600 mm ALTERNATIVE FLARED END SECTION	900 mm ALTERNATIVE FLARED END SECTION	1200 mm ALTERNATIVE FLARED END SECTION	900 mm REINFORCED CONCRETE PIPE	1050 mm REINFORCED CONCRETE PIPE	900 mm CONCRETE FLARED END SECTION	CLEAN SAND AND GRAVEL	RSP (BACKING No. 1, METHOD B)	RSP (LIGHT, METHOD B)	RSP (1/4 T, METHOD B)	RSP (1/2 T, METHOD A)	RSP (1 T, METHOD B)	RSP FABRIC	(N) PERMEABLE MATERIAL	(N) PERMEABLE MATERIAL FABRIC	900 mm REINFORCED CONCRETE PIPE (CLASS III)	1200 mm REINFORCED CONCRETE PIPE (CLASS III)	80 mm PLASTIC PIPE (OUTLET)	DRAINAGE PLAN SHEET No.	DRAINAGE PROFILE No.	DRAINAGE SYSTEM No.	DRAINAGE UNIT	STATION	DESCRIPTION
m	EA	EA	EA	m	EA	EA	EA	m	m^3	m^3	m	kg	EA	EA	m^3	m^3	m^3	m^3	kg	kg	m	m	m	m	EA	EA	EA	EA	m	m	EA	m^3	m^3	m^3	m^3	m^3	m^3	m^2	m^3	m^2	m	m	m						
												85					1.19																									5	8	18	a	"U1" 103+86.788	G1-DI (H=1.83) GRATE TYPE 600-13
												85					1.19																												b		G1-DI (H=1.83) GRATE TYPE 600-13
																					20.89																									c		450 mm APC
													1					1.50																											d		CONCRETE APRON (G1-DI)
													1					1.50																											e		CONCRETE APRON (G1-DI)
																						18.29																							f		600 mm APC
																										1																			g		600 mm AFES
																																		40.1			133.1								h		RSP (LIGHT, METHOD B)
				39.2																																						5	9	19	a	"U1" 104+63.647	REMOVE CULVERT (200 mm)
				28.5																																						5	9	20	a	"U1" 103+72.185	REMOVE CULVERT (200 mm)
				44.0																																						5	10	21	a	"U1" 105+05.235	REMOVE CULVERT (600 mm)
																					24.39																						5	10	22	a	"A" 105+50.000	450 mm APC
												85					0.69																												b		G1-DI (H=0.91) GRATE TYPE 600-13
													1					1.50																											c		CONCRETE APRON (G1-DI)
												85					1.19																												d		G1-DI (H=1.83) GRATE TYPE 600-13
													1					1.50																											e		CONCRETE APRON (G1-DI)
												85		1			1.97																												f		Mod G4-DI (H=2.44) GRATE TYPE 600-13
												85		1			0.94																												g		G3-DI (H=1.37) GRATE TYPE 600-13
																					15.09																									h		450 mm APC
																						18.42																							i		600 mm APC
																						6.10																							j		600 mm APC
																	1.07																												k		MODIFIED PIPE HEADWALL (600 mm)
																																		19.6			65.9								l		RSP (LIGHT, METHOD B)
																						27.43																				5	11	23	a	"H" 100+72.500	600 mm APC
																	1.07																												b		MODIFIED PIPE HEADWALL (600 mm)
																																		0.8			4.1								c		RSP (LIGHT, METHOD B)
																																		11.6			39.8								d		RSP (LIGHT, METHOD B)
																										1																			e		600 mm AFES
																							21.34																			5	11	24	a	"U4" 106+30.000	900 mm APC
											3.05																																		b		CABLE RAILING
																	1.07																												c		MODIFIED PIPE HEADWALL (900 mm)
																																		4.8			14.8								d		RSP (LIGHT, METHOD B)
																																		15.4			39.8								e		RSP (LIGHT, METHOD B)
																	1.95																												f		MODIFIED PIPE HEADWALL (900 mm)
											3.05																																		g		CABLE RAILING
				111.7							6.10	510	4	2			12.33	6.00			60.37	70.24	21.34			2								92.3			297.5										SHEET TOTAL

STATE OF CALIFORNIA - DEPARTMENT OF TRANSPORTATION
Caltrans 03-DESIGN EAST

FUNCTIONAL SUPERVISOR: DOUGLAS S. JONES
CALCULATED-DESIGNED BY: KAO THAO
CHECKED BY: SCOTT FOSTER
REVISED BY: MGA
DATE REVISED: 05-30-11

LAST REVISION 11-30-11
DATE PLOTTED => 28-JAN-2012
TIME PLOTTED => 06:11

DRAINAGE QUANTITIES
DQ-3

Dist	COUNTY	ROUTE	KILOMETER POST TOTAL PROJECT	SHEET No.	TOTAL SHEETS
01	Men	101	R69.4/R78.9	392	939

Mitch Andrus 9-22-11
REGISTERED CIVIL ENGINEER DATE

1-23-12
PLANS APPROVAL DATE

REGISTERED PROFESSIONAL ENGINEER MITCH ANDRUS No. C48753 Exp. 9-30-12 CIVIL STATE OF CALIFORNIA

THE STATE OF CALIFORNIA OR ITS OFFICERS OR AGENTS SHALL NOT BE RESPONSIBLE FOR THE ACCURACY OR COMPLETENESS OF ELECTRONIC COPIES OF THIS PLAN SHEET.

Caltrans Metric

DRAINAGE QUANTITIES

		REMOVE ITEMS						Misc ITEMS							CONCRETE AND STEEL						APC				AFES				RCP		CFES	RSP									JACKED PIPE								
ABANDON CULVERT	ABANDON RCB	REMOVE RCB CULVERT	REMOVE WINGWALL	REMOVE CULVERT	REMOVE INLET	REMOVE FES	REMOVE HEADWALL	NPS 6 SUPPLY LINE (BRIDGE)	(N) SLURRY BACKFILL	(N) MINOR CONCRETE	CABLE RAILING	MISCELLANEOUS IRON AND STEEL	DRAINAGE INLET MARKER (STAMPED CONCRETE INLET)	DRAINAGE INLET MARKER (PLASTIC)	CLASS 2 CONCRETE (WINGWALLS)	CLASS 1 CONCRETE (BOX CULVERT)	MINOR CONCRETE (MINOR STRUCTURE)	MINOR CONCRETE (MISCELLANEOUS CONSTRUCTION)	BAR REINFORCING STEEL (WINGWALLS)	BAR REINFORCING STEEL (BOX CULVERT)	450 mm ALTERNATIVE PIPE CULVERT	600 mm ALTERNATIVE PIPE CULVERT	900 mm ALTERNATIVE PIPE CULVERT	1200 mm ALTERNATIVE PIPE CULVERT	450 mm ALTERNATIVE FLARED END SECTION	600 mm ALTERNATIVE FLARED END SECTION	900 mm ALTERNATIVE FLARED END SECTION	1200 mm ALTERNATIVE FLARED END SECTION	900 mm REINFORCED CONCRETE PIPE	1050 mm REINFORCED CONCRETE PIPE	900 mm CONCRETE FLARED END SECTION	CLEAN SAND AND GRAVEL	RSP (BACKING No. 1, METHOD B)	RSP (LIGHT, METHOD B)	RSP (1/4 T, METHOD B)	RSP (1/2 T, METHOD A)	RSP (1 T, METHOD B)	RSP FABRIC	(N) PERMEABLE MATERIAL	(N) PERMEABLE MATERIAL FABRIC	900 mm REINFORCED CONCRETE PIPE (CLASS III)	1200 mm REINFORCED CONCRETE PIPE (CLASS III)	80 mm PLASTIC PIPE (OUTLET)	DRAINAGE PLAN SHEET No.	DRAINAGE PROFILE No.	DRAINAGE SYSTEM No.	DRAINAGE UNIT	STATION	DESCRIPTION
m	EA	EA	EA	m	EA	EA	EA	m	m^3	m^3	m	kg	EA	EA	m^3	m^3	m^3	m^3	kg	kg	m	m	m	m	EA	EA	EA	EA	m	m	EA	m^3	m^3	m^3	m^3	m^3	m^3	m^2	m^3	m^2	m	m	m						
												85					1.45																									5	12	25	a	"U2" 105+44.178	G2-DI (H=1.22) GRATE TYPE 600-13
																						18.29																								b		600 mm APC
																																	4.6			15.8										c		RSP (LIGHT, METHOD B)
																	1.07																													d		MODIFIED PIPE HEADWALL (600 mm)
													1					1.79																											e		CONCRETE APRON (G2-DI)
												85					0.86																													f		G1-DI (H=1.22) GRATE TYPE 600-13
													1					1.50																											g		CONCRETE APRON (G1-DI)
																					5.24																									h		450 mm APC
																					14.11																									i		450 mm APC
																					9.28																									j		450 mm APC
												85		1			1.03																													k		G3-DI (H=1.52) GRATE TYPE 600-13
												85					1.68																													l		G2-DI (H=1.52) GRATE TYPE 600-13
													1					1.79																											m		CONCRETE APRON (G2-DI)
												85		1			0.86																									6	13	26	a	"A" 107+02.306	G3-DI (H=1.22) GRATE TYPE 600-13
												85		1			1.19																													b		G3-DI (H=1.83) GRATE TYPE 600-13
																					12.44																									c		450 mm APC
												85					1.38																													d		Mod G2-DI (H=2.13) GRATE TYPE 600-13
																						18.28																								e		600 mm APC
													1					1.60																											f		CONCRETE APRON (G2-DI)
												85					1.28																													g		Mod G2-DI (H=2.13) GRATE TYPE 600-13
																						11.39																								h		600 mm APC
													1					1.60																											i		CONCRETE APRON (G2-DI)
												85		1			1.97																													j		Mod G4-DI (H=3.35) GRATE TYPE 600-13
																						18.27																								k		600 mm APC
												85		1			0.94																													l		G3-DI (H=1.37) GRATE TYPE 600-13
																					23.77																									m		450 mm APC
																						9.14																								n		600 mm APC
																	1.07																													o		MODIFIED PIPE HEADWALL (600 mm)
																																	22.7			76.6										p		RSP (LIGHT, METHOD B)
				12.6																																					6	14	28	a	"A" 107+52.648	REMOVE CULVERT (1980 mm)
																																	6.6			23.4					6	-	29	a		RSP (LIGHT, METHOD B)
																																	10.5			36.4								b		RSP (LIGHT, METHOD B)
												85		1			1.19																									6	14	30	a	"A" 109+07.809	G1-DI (H=1.83) GRATE TYPE 600-13
																						15.24																								b		600 mm APC
																																	3.0			11.7								c		RSP (LIGHT, METHOD B)
																										1																			d		600 mm AFES
													1					1.50																											e		CONCRETE APRON (G1-DI)
																					36.93																									f		450 mm APC
				12.6								935	6	6			15.97	9.78			101.77	90.61				1							47.4			163.9										SHEET TOTAL		

DRAINAGE QUANTITIES
DQ-4

STATE OF CALIFORNIA - DEPARTMENT OF TRANSPORTATION
Caltrans 03-DESIGN EAST

FUNCTIONAL SUPERVISOR: DOUGLAS S. JONES
CALCULATED-DESIGNED BY: KAO THAO
CHECKED BY: SCOTT FOSTER
REVISED BY: MGA
DATE REVISED: 05-30-11

LAST REVISION 11-30-11
DATE PLOTTED => 28-JAN-2012
TIME PLOTTED => 06:11

Dist	COUNTY	ROUTE	KILOMETER POST TOTAL PROJECT	SHEET No.	TOTAL SHEETS
01	Men	101	R69.4/R78.9	393	939

Mitch Andrus 9-22-11
REGISTERED CIVIL ENGINEER DATE

1-23-12
PLANS APPROVAL DATE

REGISTERED PROFESSIONAL ENGINEER MITCH ANDRUS No. C48753 Exp. 9-30-12 CIVIL STATE OF CALIFORNIA

THE STATE OF CALIFORNIA OR ITS OFFICERS OR AGENTS SHALL NOT BE RESPONSIBLE FOR THE ACCURACY OR COMPLETENESS OF ELECTRONIC COPIES OF THIS PLAN SHEET.

Caltrans Metric

DRAINAGE QUANTITIES

	REMOVE ITEMS						Misc ITEMS							CONCRETE AND STEEL						APC				AFES				RCP		CFES	RSP									JACKED PIPE							
	ABANDON CULVERT	ABANDON RCB	REMOVE RCB CULVERT	REMOVE WINGWALL	REMOVE CULVERT	REMOVE INLET	REMOVE FES	REMOVE HEADWALL	NPS 6 SUPPLY LINE (BRIDGE)	(N) SLURRY BACKFILL	(N) MINOR CONCRETE	CABLE RAILING	MISCELLANEOUS IRON AND STEEL	DRAINAGE INLET MARKER (STAMPED CONCRETE INLET)	DRAINAGE INLET MARKER (PLASTIC)	CLASS 2 CONCRETE (WINGWALLS)	CLASS 1 CONCRETE (BOX CULVERT)	MINOR CONCRETE (MINOR STRUCTURE)	MINOR CONCRETE (MISCELLANEOUS CONSTRUCTION)	BAR REINFORCING STEEL (WINGWALLS)	BAR REINFORCING STEEL (BOX CULVERT)	450 mm ALTERNATIVE PIPE CULVERT	600 mm ALTERNATIVE PIPE CULVERT	900 mm ALTERNATIVE PIPE CULVERT	1200 mm ALTERNATIVE PIPE CULVERT	450 mm ALTERNATIVE FLARED END SECTION	600 mm ALTERNATIVE FLARED END SECTION	900 mm ALTERNATIVE FLARED END SECTION	1200 mm ALTERNATIVE FLARED END SECTION	900 mm REINFORCED CONCRETE PIPE	1050 mm REINFORCED CONCRETE PIPE	900 mm CONCRETE FLARED END SECTION	CLEAN SAND AND GRAVEL	RSP (BACKING No. 1, METHOD B)	RSP (LIGHT, METHOD B)	RSP (1/4 T, METHOD B)	RSP (1/2 T, METHOD A)	RSP (1 T, METHOD B)	RSP FABRIC	(N) PERMEABLE MATERIAL	(N) PERMEABLE MATERIAL FABRIC	900 mm REINFORCED CONCRETE PIPE (CLASS III)	1200 mm REINFORCED CONCRETE PIPE (CLASS III)	80 mm PLASTIC PIPE (OUTLET)	DRAINAGE PLAN SHEET No.	DRAINAGE PROFILE No.	DRAINAGE SYSTEM No.	DRAINAGE UNIT	STATION	DESCRIPTION
m	EA	EA	EA	m	EA	EA	EA	m	m^3	m^3	m	kg	EA	EA	m^3	m^3	m^3	m^3	kg	kg	m	m	m	m	EA	EA	EA	EA	m	m	EA	m^3	m^3	m^3	m^3	m^3	m^3	m^2	m^3	m^2	m	m	m						
													85					1.19																									6	14	30	g		G1-DI (H=1.83) GRATE TYPE 600-13
														1					1.50																												h		CONCRETE APRON (G1-DI)
																						16.57																									i		450 mm APC
													85					1.03																												j		G1-DI (H=1.52) GRATE TYPE 600-13
														1					1.50																												k		CONCRETE APRON (G1-DI)
													85		1			1.19																									6	15	31	a	"U3" 108+75.000	Mod G4-DI (H=2.44) GRATE TYPE 600-13
																						9.14																									b		450 mm APC
																																	5.8				22.3										c		RSP (LIGHT, METHOD B)
																									1																						d		450 mm AFES
													85					1.19																									6	15	32	a	"A" 109+46.389	Mod G1-DI (H=1.83) GRATE TYPE 600-13
																							15.24																								b		600 mm APC
																																	4.8				15.2										c		RSP (LIGHT, METHOD B)
																										1																					d		600 mm AFES
														1					1.50																												e		CONCRETE APRON (G1-DI)
																						12.19																									f		450 mm APC
														1					1.50																												g		CONCRETE APRON (G1-DI)
													85					1.19																												h		G1-DI (H=1.83) GRATE TYPE 600-13
																						23.88																									i		450 mm APC
														1					1.50																												j		CONCRETE APRON (G1-DI)
													85					1.03																												k		G1-DI (H=1.52) GRATE TYPE 600-13
													85					0.69																									7	16	33	a	"A" 110+50.000	G1-DI (H=0.91) GRATE TYPE 600-13
																							28.96																								b		600 mm APC
														1					1.50																												c		CONCRETE APRON (G1-DI)
																																	4.5				16.3										d		RSP (LIGHT, METHOD B)
																										1																					e		600 mm AFES
					75.6																																					7	16	34	a	"A" 110+71.840	REMOVE CULVERT (900 mm)
																								79.25																							b		900 mm APC
																																	74.5				151.4										c		RSP (LIGHT, METHOD B)
																											1																				d		900 mm AFES
																																	10.2				27.5										e		RSP (LIGHT, METHOD B)
																											1																				f		900 mm AFES
					12.2																																					7	17	35	a	"A" 112+58.850	REMOVE CULVERT (750 mm)
													85					1.58																				0.45	4.46				7	17	36	a	"AS" 41+30.000	Mod G2-DI (H=1.83) GRATE TYPE 600-13
																							25.91																								b		600 mm APC
														1					1.60																												c		CONCRETE APRON (G2-DI)
																																	5.7				19.8										d		RSP (LIGHT, METHOD B)
																										1																					e		600 mm AFES
					87.8								680	7	1			9.09	10.60			61.78	70.11	79.25		1	3	2					105.5				252.5	0.45	4.46								SHEET TOTAL	

DRAINAGE QUANTITIES
DQ-5

CALCULATED-DESIGNED BY KAO THAO
CHECKED BY SCOTT FOSTER
REVISED BY MGA
DATE REVISED 05-30-11
FUNCTIONAL SUPERVISOR DOUGLAS S. JONES

STATE OF CALIFORNIA - DEPARTMENT OF TRANSPORTATION
Caltrans 03-DESIGN EAST

LAST REVISION 11-30-11
DATE PLOTTED => 28-JAN-2012
TIME PLOTTED => 06:11

Dist	COUNTY	ROUTE	KILOMETER POST TOTAL PROJECT	SHEET No.	TOTAL SHEETS
01	Men	101	R69.4/R78.9	394	939

Mitch Andrus 9-22-11
REGISTERED CIVIL ENGINEER DATE

1-23-12
PLANS APPROVAL DATE

REGISTERED PROFESSIONAL ENGINEER MITCH ANDRUS No. C48753 Exp. 9-30-12 CIVIL STATE OF CALIFORNIA

THE STATE OF CALIFORNIA OR ITS OFFICERS OR AGENTS SHALL NOT BE RESPONSIBLE FOR THE ACCURACY OR COMPLETENESS OF ELECTRONIC COPIES OF THIS PLAN SHEET.

Caltrans Metric

DRAINAGE QUANTITIES

	REMOVE ITEMS						Misc ITEMS							CONCRETE AND STEEL							APC				AFES				RCP		CFES	RSP									JACKED PIPE							
ABANDON CULVERT	ABANDON RCB	REMOVE RCB CULVERT	REMOVE WINGWALL	REMOVE CULVERT	REMOVE INLET	REMOVE FES	REMOVE HEADWALL	NPS 6 SUPPLY LINE (BRIDGE)	(N) SLURRY BACKFILL	(N) MINOR CONCRETE	CABLE RAILING	MISCELLANEOUS IRON AND STEEL	DRAINAGE INLET MARKER (STAMPED CONCRETE INLET)	DRAINAGE INLET MARKER (PLASTIC)	CLASS 2 CONCRETE (WINGWALLS)	CLASS 1 CONCRETE (BOX CULVERT)	MINOR CONCRETE (MINOR STRUCTURE)	MINOR CONCRETE (MISCELLANEOUS CONSTRUCTION)	BAR REINFORCING STEEL (WINGWALLS)	BAR REINFORCING STEEL (BOX CULVERT)	450 mm ALTERNATIVE PIPE CULVERT	600 mm ALTERNATIVE PIPE CULVERT	900 mm ALTERNATIVE PIPE CULVERT	1200 mm ALTERNATIVE PIPE CULVERT	450 mm ALTERNATIVE FLARED END SECTION	600 mm ALTERNATIVE FLARED END SECTION	900 mm ALTERNATIVE FLARED END SECTION	1200 mm ALTERNATIVE FLARED END SECTION	900 mm REINFORCED CONCRETE PIPE	1050 mm REINFORCED CONCRETE PIPE	900 mm CONCRETE FLARED END SECTION	CLEAN SAND AND GRAVEL	RSP (BACKING No. 1, METHOD B)	RSP (LIGHT, METHOD B)	RSP (1/4 T, METHOD B)	RSP (1/2 T, METHOD A)	RSP (1 T, METHOD B)	RSP FABRIC	(N) PERMEABLE MATERIAL	(N) PERMEABLE MATERIAL FABRIC	900 mm REINFORCED CONCRETE PIPE (CLASS III)	1200 mm REINFORCED CONCRETE PIPE (CLASS III)	80 mm PLASTIC PIPE (OUTLET)	DRAINAGE PLAN SHEET No.	DRAINAGE PROFILE No.	DRAINAGE SYSTEM No.	DRAINAGE UNIT	STATION	DESCRIPTION
m	EA	EA	EA	m	EA	EA	EA	m	m^3	m^3	m	kg	EA	EA	m^3	m^3	m^3	m^3	kg	kg	m	m	m	m	EA	EA	EA	EA	m	m	EA	m^3	m^3	m^3	m^3	m^3	m^3	m^2	m^3	m^2	m	m	m						
				131.4																																						8	18	37	a	"AS" 42+46.680	REMOVE CULVERT (1050 mm)
						1																																							b		REMOVE FES
						1																																							c		REMOVE FES
																														143.26																d		1050 mm RCP
																	2.29																													e		MODIFIED PIPE HEADWALL (1050 mm)
											3.51																																		f		CABLE RAILING
																																	139.2				228.8									g		RSP (LIGHT, METHOD B)
																																	15.6				35.1									h		RSP (LIGHT, METHOD B)
																	2.29																													i		MODIFIED PIPE HEADWALL (1050 mm)
											3.51																																		j		CABLE RAILING
																						27.43																				8	19	38	a	"AN" 33+70.000	600 mm APC
												85					1.97																					0.45	4.46							b		Mod G2-DI (H=2.44) GRATE TYPE 600-13
													1					1.67																											c		CONCRETE APRON (G2-DI)
																									1																					d		600 mm AFES
																																	8.2				28.0									e		RSP (LIGHT, METHOD B)
24.58								7.17																																		8	20	39	a	"AN" 43+85.602	ABANDON CULVERT (600 mm)
24.79								7.24																																					b		ABANDON CULVERT (600 mm)
				6.1																																									c		REMOVE CULVERT (600 mm)
				6.1																																									d		REMOVE CULVERT (600 mm)
					1																																								e		REMOVE DI
						1																																							f		REMOVE FES
																						60.96																				8	20	40	a	"AS" 44+07.378	600 mm APC
																																	8.9				26.6									b		RSP (LIGHT, METHOD B)
																									1																					c		600 mm AFES
																	1.07																													d		MODIFIED PIPE HEADWALL (600 mm)
																																	3.6				12.0									e		RSP (LIGHT, METHOD B)
												85					1.19																									9	21	41	a	"AN" 46+05.552	G1-DI (H=1.83) GRATE TYPE 600-13
																						27.43																								b		600 mm APC
													1					1.50																											c		CONCRETE APRON (G1-DI)
																																	6.9				24.4									d		RSP (LIGHT, METHOD B)
																									1																					e		600 mm AFES
												85					1.19																													f		G1-DI (H=1.83) GRATE TYPE 600-13
													1					1.50																											g		CONCRETE APRON (G1-DI)
																					12.04																									h		450 mm APC
49.37				143.6	1	3		14.41			7.02	255	3				10.00	4.67			12.04	115.82			3				143.26				182.4				354.9	0.45	4.46				SHEET TOTAL				

STATE OF CALIFORNIA - DEPARTMENT OF TRANSPORTATION
Caltrans 03-DESIGN EAST

FUNCTIONAL SUPERVISOR: DOUGLAS S. JONES
CALCULATED-DESIGNED BY: KAO THAO
CHECKED BY: SCOTT FOSTER
REVISED BY: MGA
DATE REVISED: 05-30-11

DRAINAGE QUANTITIES
DQ-6

LAST REVISION 11-30-11
DATE PLOTTED => 28-JAN-2012
TIME PLOTTED => 06:11

Dist	COUNTY	ROUTE	KILOMETER POST TOTAL PROJECT	SHEET No.	TOTAL SHEETS
01	Men	101	R69.4/R78.9	395	939

Mitch Andrus 9-22-11
REGISTERED CIVIL ENGINEER DATE

1-23-12
PLANS APPROVAL DATE

REGISTERED PROFESSIONAL ENGINEER MITCH ANDRUS No. C48753 Exp. 9-30-12 CIVIL STATE OF CALIFORNIA

THE STATE OF CALIFORNIA OR ITS OFFICERS OR AGENTS SHALL NOT BE RESPONSIBLE FOR THE ACCURACY OR COMPLETENESS OF ELECTRONIC COPIES OF THIS PLAN SHEET.

Caltrans Metric

DRAINAGE QUANTITIES

		REMOVE ITEMS						Misc ITEMS							CONCRETE AND STEEL						APC				AFES				RCP		CFES	RSP									JACKED PIPE								
	ABANDON CULVERT	ABANDON RCB	REMOVE RCB CULVERT	REMOVE WINGWALL	REMOVE CULVERT	REMOVE INLET	REMOVE FES	REMOVE HEADWALL	NPS 6 SUPPLY LINE (BRIDGE)	(N) SLURRY BACKFILL	(N) MINOR CONCRETE	CABLE RAILING	MISCELLANEOUS IRON AND STEEL	DRAINAGE INLET MARKER (STAMPED CONCRETE INLET)	DRAINAGE INLET MARKER (PLASTIC)	CLASS 2 CONCRETE (WINGWALLS)	CLASS 1 CONCRETE (BOX CULVERT)	MINOR CONCRETE (MINOR STRUCTURE)	MINOR CONCRETE (MISCELLANEOUS CONSTRUCTION)	BAR REINFORCING STEEL (WINGWALLS)	BAR REINFORCING STEEL (BOX CULVERT)	450 mm ALTERNATIVE PIPE CULVERT	600 mm ALTERNATIVE PIPE CULVERT	900 mm ALTERNATIVE PIPE CULVERT	1200 mm ALTERNATIVE PIPE CULVERT	450 mm ALTERNATIVE FLARED END SECTION	600 mm ALTERNATIVE FLARED END SECTION	900 mm ALTERNATIVE FLARED END SECTION	1200 mm ALTERNATIVE FLARED END SECTION	900 mm REINFORCED CONCRETE PIPE	1050 mm REINFORCED CONCRETE PIPE	900 mm CONCRETE FLARED END SECTION	CLEAN SAND AND GRAVEL	RSP (BACKING No. 1, METHOD B)	RSP (LIGHT, METHOD B)	RSP (1/4 T, METHOD B)	RSP (1/2 T, METHOD A)	RSP (1 T, METHOD B)	RSP FABRIC	(N) PERMEABLE MATERIAL	(N) PERMEABLE MATERIAL FABRIC	900 mm REINFORCED CONCRETE PIPE (CLASS III)	1200 mm REINFORCED CONCRETE PIPE (CLASS III)	80 mm PLASTIC PIPE (OUTLET)	DRAINAGE PLAN SHEET No.	DRAINAGE PROFILE No.	DRAINAGE SYSTEM No.	DRAINAGE UNIT	STATION	DESCRIPTION
m	EA	EA	EA	m	EA	EA	EA	m	m^3	m^3	m	kg	EA	EA	m^3	m^3	m^3	m^3	kg	kg	m	m	m	m	EA	EA	EA	EA	m	m	EA	m^3	m^3	m^3	m^3	m^3	m^3	m^2	m^3	m^2	m	m	m						
													85		1			0.94																									11	22	42	a	"A" 125+30.000	G3-DI (H=1.37) GRATE TYPE 600-13
													85		1			1.19																												b		G3-DI (H=1.83) GRATE TYPE 600-13
																						24.10																									c		450 mm APC
																						4.57																									d		450 mm APC
																																		10.1			38.2										e		RSP (LIGHT, METHOD B)
																		0.83																													f		MODIFIED PIPE HEADWALL (450 mm)
																																									47.24		12	23	43	a	"A" 128+41.087	JACKED 1200 mm RCP (CLASS III)
												3.96																																			b		CABLE RAILING
																		2.81																													c		1200 mm HEADWALL
																																		24.5			46.8										d		RSP (LIGHT, METHOD B)
																		2.81																													e		1200 mm HEADWALL
												3.96																																			f		CABLE RAILING
													85		1			1.19																									12	24	44	a	"A" 128+70.000	G3-DI (H=1.83) GRATE TYPE 600-13
																						7.62																									b		450 mm APC
																									1																						c		450 mm AFES
																																		9.4			35.6										d		RSP (LIGHT, METHOD B)
																						30.48																									e		450 mm APC
													85		1			1.19																													f		G3-DI (H=1.83) GRATE TYPE 600-13
																													67.06													13	25	45	a	"A" 132+52.219	900 mm RCP
																															1																b		900 mm CFES
																																		9.2			25.1										c		RSP (LIGHT, METHOD B)
																		1.95																													d		MODIFIED PIPE HEADWALL (900 mm)
												3.05																																			e		CABLE RAILING
																																		15.6			40.2										f		RSP (LIGHT, METHOD B)
													85		1			1.19																				0.34	3.68			13	26	46	a	"A" 133+90.000	Mod G3-DI (H=1.83) GRATE TYPE 600-13
													85		1			1.19																				0.34	3.68						b		Mod G3-DI (H=1.83) GRATE TYPE 600-13
																						13.01																									c		450 mm APC
																							18.29																								d		600 mm APC
																																		11.2			38.1										e		RSP (LIGHT, METHOD B)
																										1																						f		600 mm AFES
													85		1			1.19																				0.34	3.68			14	26	47	a	"A" 135+05.000	Mod G3-DI (H=1.83) GRATE TYPE 600-13
													85		1			1.19																				0.34	3.68						b		Mod G3-DI (H=1.83) GRATE TYPE 600-13
																						15.24																									c		450 mm APC
																							18.29																								d		600 mm APC
																																		13.3			45.0										e		RSP (LIGHT, METHOD B)
																										1																						f		600 mm AFES
													85		1			1.19																				0.34	3.68						g		Mod G3-DI (H=1.83) GRATE TYPE 600-13
																						14.11																									h		450 mm APC
												10.97	765		9			18.86				109.13	36.58			1	2			67.06		1			93.3			269.0	1.70	18.40		47.24							SHEET TOTAL

DRAINAGE QUANTITIES
DQ-7

STATE OF CALIFORNIA - DEPARTMENT OF TRANSPORTATION
Caltrans 03-DESIGN EAST

FUNCTIONAL SUPERVISOR: DOUGLAS S. JONES
CALCULATED-DESIGNED BY: KAO THAO
CHECKED BY: SCOTT FOSTER
REVISED BY: MGA
DATE REVISED: 05-30-11

LAST REVISION 11-30-11
DATE PLOTTED => 28-JAN-2012
TIME PLOTTED => 06:11

Dist	COUNTY	ROUTE	KILOMETER POST TOTAL PROJECT	SHEET No.	TOTAL SHEETS
01	Men	101	R69.4/R78.9	396	939

Mitch Andrus 9-22-11
REGISTERED CIVIL ENGINEER DATE

1-23-12
PLANS APPROVAL DATE

REGISTERED PROFESSIONAL ENGINEER MITCH ANDRUS No. C48753 Exp. 9-30-12 CIVIL STATE OF CALIFORNIA

THE STATE OF CALIFORNIA OR ITS OFFICERS OR AGENTS SHALL NOT BE RESPONSIBLE FOR THE ACCURACY OR COMPLETENESS OF ELECTRONIC COPIES OF THIS PLAN SHEET.

Caltrans Metric

DRAINAGE QUANTITIES

	REMOVE ITEMS						Misc ITEMS							CONCRETE AND STEEL						APC				AFES				RCP		CFES	RSP									JACKED PIPE							
ABANDON CULVERT	ABANDON RCB	REMOVE RCB CULVERT	REMOVE WINGWALL	REMOVE CULVERT	REMOVE INLET	REMOVE FES	REMOVE HEADWALL	NPS 6 SUPPLY LINE (BRIDGE)	(N) SLURRY BACKFILL	(N) MINOR CONCRETE	CABLE RAILING	MISCELLANEOUS IRON AND STEEL	DRAINAGE INLET MARKER (STAMPED CONCRETE INLET)	DRAINAGE INLET MARKER (PLASTIC)	CLASS 2 CONCRETE (WINGWALLS)	CLASS 1 CONCRETE (BOX CULVERT)	MINOR CONCRETE (MINOR STRUCTURE)	MINOR CONCRETE (MISCELLANEOUS CONSTRUCTION)	BAR REINFORCING STEEL (WINGWALLS)	BAR REINFORCING STEEL (BOX CULVERT)	450 mm ALTERNATIVE PIPE CULVERT	600 mm ALTERNATIVE PIPE CULVERT	900 mm ALTERNATIVE PIPE CULVERT	1200 mm ALTERNATIVE PIPE CULVERT	450 mm ALTERNATIVE FLARED END SECTION	600 mm ALTERNATIVE FLARED END SECTION	900 mm ALTERNATIVE FLARED END SECTION	1200 mm ALTERNATIVE FLARED END SECTION	900 mm REINFORCED CONCRETE PIPE	1050 mm REINFORCED CONCRETE PIPE	900 mm CONCRETE FLARED END SECTION	CLEAN SAND AND GRAVEL	RSP (BACKING No. 1, METHOD B)	RSP (LIGHT, METHOD B)	RSP (1/4 T, METHOD B)	RSP (1/2 T, METHOD A)	RSP (1 T, METHOD B)	RSP FABRIC	(N) PERMEABLE MATERIAL	(N) PERMEABLE MATERIAL FABRIC	900 mm REINFORCED CONCRETE PIPE (CLASS III)	1200 mm REINFORCED CONCRETE PIPE (CLASS III)	80 mm PLASTIC PIPE (OUTLET)	DRAINAGE PLAN SHEET No.	DRAINAGE PROFILE No.	DRAINAGE SYSTEM No.	DRAINAGE UNIT	STATION	DESCRIPTION
m	EA	EA	EA	m	EA	EA	EA	m	m^3	m^3	m	kg	EA	EA	m^3	m^3	m^3	m^3	kg	kg	m	m	m	m	EA	EA	EA	EA	m	m	EA	m^3	m^3	m^3	m^3	m^3	m^3	m^2	m^3	m^2	m	m	m						
																58.70				5600																						16	27	48	a	"A" 141+74.906	1.83 x 0.90 x 53.85 RCB
															2.61				65																											b		WING WALLS (TYPE B)
																																	15.3			34.0										c		RSP (LIGHT, METHOD B)
																																	12.2			31.2										d		RSP (LIGHT, METHOD B)
											4.27																																			e		CABLE RAILING
															2.61				65																											f		WING WALLS (TYPE B)
											4.27																																			g		CABLE RAILING
												85		1			1.19																										17	28	49	a	"A" 146+05.000	G3-DI (H=1.83) GRATE TYPE 600-13
																					9.14																									b		450 mm APC
																																	3.1			11.8										c		RSP (LIGHT, METHOD B)
																									1																					d		450 mm AFES
												85		1			1.19																													e		G3-DI (H=1.83) GRATE TYPE 600-13
																					18.29																									f		450 mm APC
												85		1			1.19																										17	29	50	a	"A" 147+15.000	G3-DI (H=1.83) GRATE TYPE 600-13
																					40.20																									b		450 mm APC
												85		1			1.19																													c		G3-DI (H=1.83) GRATE TYPE 600-13
																					49.11																									d		450 mm APC
												85		1			1.19																													e		G3-DI (H=1.83) GRATE TYPE 600-13
												85		1			1.19																													f		G3-DI (H=1.83) GRATE TYPE 600-13
																					40.11																									g		450 mm APC
												85		1			1.19																													h		G3-DI (H=1.83) GRATE TYPE 600-13
																					18.11																									i		450 mm APC
																					6.10																									j		450 mm APC
																									1																					k		450 mm AFES
																																	7.8			29.8										l		RSP (LIGHT, METHOD B)
								12.4																																						m		NPS 6 SUPPLY LINE (BRIDGE)
										9.45						24.63				2776																							18	30	51	a	"CV" 9+44.131	2.44 x 1.83 x 13.61 RCB
															19.82				1131																											b		WING WALLS (TYPE B)
																																	113.8			135.2										c		RSP (LIGHT, METHOD B)
											12.19																																			d		CABLE RAILING
															19.82				1131																											e		WING WALLS (TYPE B)
																																	249.7			242.4										f		RSP (LIGHT, METHOD B)
											8.94																																			g		CABLE RAILING
																																	1230.6			431.3										h		RSP (LIGHT, METHOD B)
								12.4		9.45	29.67	595		7	44.86	83.33	8.33		2392	8376	181.06				2								1632.5			915.7										SHEET TOTAL		

STATE OF CALIFORNIA - DEPARTMENT OF TRANSPORTATION
Caltrans 03-DESIGN EAST

FUNCTIONAL SUPERVISOR: DOUGLAS S. JONES
CALCULATED-DESIGNED BY: KAO THAO
CHECKED BY: SCOTT FOSTER
REVISED BY: MGA
DATE REVISED: 05-30-11

DRAINAGE QUANTITIES
DQ-8

LAST REVISION 11-30-11
DATE PLOTTED => 28-JAN-2012
TIME PLOTTED => 06:11

Dist	COUNTY	ROUTE	KILOMETER POST TOTAL PROJECT	SHEET No.	TOTAL SHEETS
01	Men	101	R69.4/R78.9	397	939

Mitch Andrus 9-22-11
REGISTERED CIVIL ENGINEER DATE

1-23-12
PLANS APPROVAL DATE

REGISTERED PROFESSIONAL ENGINEER MITCH ANDRUS No. C48753 Exp. 9-30-12 CIVIL STATE OF CALIFORNIA

THE STATE OF CALIFORNIA OR ITS OFFICERS OR AGENTS SHALL NOT BE RESPONSIBLE FOR THE ACCURACY OR COMPLETENESS OF ELECTRONIC COPIES OF THIS PLAN SHEET.

Caltrans Metric

DRAINAGE QUANTITIES

	REMOVE ITEMS						Misc ITEMS							CONCRETE AND STEEL						APC				AFES				RCP		CFES	RSP									JACKED PIPE							
ABANDON CULVERT	ABANDON RCB	REMOVE RCB CULVERT	REMOVE WINGWALL	REMOVE CULVERT	REMOVE INLET	REMOVE FES	REMOVE HEADWALL	NPS 6 SUPPLY LINE (BRIDGE)	(N) SLURRY BACKFILL	(N) MINOR CONCRETE	CABLE RAILING	MISCELLANEOUS IRON AND STEEL	DRAINAGE INLET MARKER (STAMPED CONCRETE INLET)	DRAINAGE INLET MARKER (PLASTIC)	CLASS 2 CONCRETE (WINGWALLS)	CLASS 1 CONCRETE (BOX CULVERT)	MINOR CONCRETE (MINOR STRUCTURE)	MINOR CONCRETE (MISCELLANEOUS CONSTRUCTION)	BAR REINFORCING STEEL (WINGWALLS)	BAR REINFORCING STEEL (BOX CULVERT)	450 mm ALTERNATIVE PIPE CULVERT	600 mm ALTERNATIVE PIPE CULVERT	900 mm ALTERNATIVE PIPE CULVERT	1200 mm ALTERNATIVE PIPE CULVERT	450 mm ALTERNATIVE FLARED END SECTION	600 mm ALTERNATIVE FLARED END SECTION	900 mm ALTERNATIVE FLARED END SECTION	1200 mm ALTERNATIVE FLARED END SECTION	900 mm REINFORCED CONCRETE PIPE	1050 mm REINFORCED CONCRETE PIPE	900 mm CONCRETE FLARED END SECTION	CLEAN SAND AND GRAVEL	RSP (BACKING No. 1, METHOD B)	RSP (LIGHT, METHOD B)	RSP (1/4 T, METHOD B)	RSP (1/2 T, METHOD A)	RSP (1 T, METHOD B)	RSP FABRIC	(N) PERMEABLE MATERIAL	(N) PERMEABLE MATERIAL FABRIC	900 mm REINFORCED CONCRETE PIPE (CLASS III)	1200 mm REINFORCED CONCRETE PIPE (CLASS III)	80 mm PLASTIC PIPE (OUTLET)	DRAINAGE PLAN SHEET No.	DRAINAGE PROFILE No.	DRAINAGE SYSTEM No.	DRAINAGE UNIT	STATION	DESCRIPTION
m	EA	EA	EA	m	EA	EA	EA	m	m^3	m^3	m	kg	EA	EA	m^3	m^3	m^3	m^3	kg	kg	m	m	m	m	EA	EA	EA	EA	m	m	EA	m^3	m^3	m^3	m^3	m^3	m^3	m^2	m^3	m^2	m	m	m						
										16.05						58.61				8281																						18	31	52	a	"CV" 31+54.325	3.05 x 1.52 x 29.16 RCB
															15.88				689																											b		WING WALLS (TYPE B)
																																				213.3	221.5										c		RSP (1 T, METHOD B)
											12.50																																			d		CABLE RAILING
															15.30				551																											e		WING WALLS (TYPE B)
																																		340.6		411.7											f		RSP (LIGHT, METHOD B)
											12.93																																			g		CABLE RAILING
	1								31.69																								5.9			20.8											h		RSP (LIGHT, METHOD B)
			1																																								18	31	53	a	"CV" 10+06.170	ABANDON RCB
			1																																											b		REMOVE WINGWALL (25.0 m3)
			1																																											c		REMOVE WINGWALL (25.0 m3)
												85		1			0.86																										23	32	54	a	"W" 168+05.000	G3-DI (H=1.22) GRATE TYPE 600-13
																					21.34																									b		450 mm APC
												85		1			1.68																				0.45	4.46								c		Mod G4-DI (H=1.98) GRATE TYPE 600-13
																					6.10																									d		450 mm APC
																									1																					e		450 mm AFES
																																	12.7			46.3										f		RSP (LIGHT, METHOD B)
																																							54.86			23	33	55	a	"W" 168+70.000	JACKED 900 mm RCP (CLASS III)
																	1.95																													b		MODIFIED PIPE HEADWALL (900 mm)
											3.05																																			c		CABLE RAILING
																																	9.2			25.1										d		RSP (LIGHT, METHOD B)
																	1.95																													e		MODIFIED PIPE HEADWALL (900 mm)
											3.05																																			f		CABLE RAILING
																																	4.1			13.0										g		RSP (LIGHT, METHOD B)
												85		1			3.21																				0.53	4.96				24	33	56	a	"W" 170+10.000	Mod G4-DI (H=3.05) GRATE TYPE 600-13
																						21.34																								b		600 mm APC
																										1																				c		600 mm AFES
																																	15.6			84.0										d		RSP (LIGHT, METHOD B)
																																							67.06			24	34	57	a	"W" 171+50.000	JACKED 900 mm RCP (CLASS III)
																	1.95																													b		MODIFIED PIPE HEADWALL (900 mm)
											3.05																																			c		CABLE RAILING
																																	14.8			46.9										d		RSP (LIGHT, METHOD B)
																																	9.2			25.1										e		RSP (LIGHT, METHOD B)
											3.05																																			f		CABLE RAILING
																	1.95																													g		MODIFIED PIPE HEADWALL (900 mm)
	1		2						31.69	16.05	37.63	255		3	31.18	58.61	13.55		1240	8281	27.44	21.34			1	1							71.5	340.6		213.3	894.4	0.98	9.42	121.92			SHEET TOTAL				

STATE OF CALIFORNIA - DEPARTMENT OF TRANSPORTATION
Caltrans 03-DESIGN EAST

CALCULATED-DESIGNED BY	KAO THAO	REVISED BY	MGA
CHECKED BY	SCOTT FOSTER	DATE REVISED	05-30-11
FUNCTIONAL SUPERVISOR	DOUGLAS S. JONES		

LAST REVISION 11-30-11 DATE PLOTTED => 28-JAN-2012 TIME PLOTTED => 06:11

DRAINAGE QUANTITIES
DQ-9

Dist	COUNTY	ROUTE	KILOMETER POST TOTAL PROJECT	SHEET No.	TOTAL SHEETS
01	Men	101	R69.4/R78.9	398	939

Mitch Andrus 9-22-11
REGISTERED CIVIL ENGINEER DATE

1-23-12
PLANS APPROVAL DATE

REGISTERED PROFESSIONAL ENGINEER MITCH ANDRUS No. C48753 Exp. 9-30-12 CIVIL STATE OF CALIFORNIA

THE STATE OF CALIFORNIA OR ITS OFFICERS OR AGENTS SHALL NOT BE RESPONSIBLE FOR THE ACCURACY OR COMPLETENESS OF ELECTRONIC COPIES OF THIS PLAN SHEET.

Caltrans Metric

DRAINAGE QUANTITIES

	REMOVE ITEMS						Misc ITEMS							CONCRETE AND STEEL						APC				AFES				RCP		CFES	RSP									JACKED PIPE							
ABANDON CULVERT	ABANDON RCB	REMOVE RCB CULVERT	REMOVE WINGWALL	REMOVE CULVERT	REMOVE INLET	REMOVE FES	REMOVE HEADWALL	NPS 6 SUPPLY LINE (BRIDGE)	(N) SLURRY BACKFILL	(N) MINOR CONCRETE	CABLE RAILING	MISCELLANEOUS IRON AND STEEL	DRAINAGE INLET MARKER (STAMPED CONCRETE INLET)	DRAINAGE INLET MARKER (PLASTIC)	CLASS 2 CONCRETE (WINGWALLS)	CLASS 1 CONCRETE (BOX CULVERT)	MINOR CONCRETE (MINOR STRUCTURE)	MINOR CONCRETE (MISCELLANEOUS CONSTRUCTION)	BAR REINFORCING STEEL (WINGWALLS)	BAR REINFORCING STEEL (BOX CULVERT)	450 mm ALTERNATIVE PIPE CULVERT	600 mm ALTERNATIVE PIPE CULVERT	900 mm ALTERNATIVE PIPE CULVERT	1200 mm ALTERNATIVE PIPE CULVERT	450 mm ALTERNATIVE FLARED END SECTION	600 mm ALTERNATIVE FLARED END SECTION	900 mm ALTERNATIVE FLARED END SECTION	1200 mm ALTERNATIVE FLARED END SECTION	900 mm REINFORCED CONCRETE PIPE	1050 mm REINFORCED CONCRETE PIPE	900 mm CONCRETE FLARED END SECTION	CLEAN SAND AND GRAVEL	RSP (BACKING No. 1, METHOD B)	RSP (LIGHT, METHOD B)	RSP (1/4 T, METHOD B)	RSP (1/2 T, METHOD A)	RSP (1 T, METHOD B)	RSP FABRIC	(N) PERMEABLE MATERIAL	(N) PERMEABLE MATERIAL FABRIC	900 mm REINFORCED CONCRETE PIPE (CLASS III)	1200 mm REINFORCED CONCRETE PIPE (CLASS III)	80 mm PLASTIC PIPE (OUTLET)	DRAINAGE PLAN SHEET No.	DRAINAGE PROFILE No.	DRAINAGE SYSTEM No.	DRAINAGE UNIT	STATION	DESCRIPTION
m	EA	EA	EA	m	EA	EA	EA	m	m^3	m^3	m	kg	EA	EA	m^3	m^3	m^3	m^3	kg	kg	m	m	m	m	EA	EA	EA	EA	m	m	EA	m^3	m^3	m^3	m^3	m^3	m^3	m^2	m^3	m^2	m	m	m						
																																							68.58			25	35	58	a	"NW1" 172+95.000	JACKED 900 mm RCP (CLASS III)
																	1.95																														b		MODIFIED PIPE HEADWALL (900 mm)
											3.05																																				c		CABLE RAILING
																																		9.2			25.1										d		RSP (LIGHT, METHOD B)
																																		9.2			25.1										e		RSP (LIGHT, METHOD B)
											3.05																																				f		CABLE RAILING
																	1.95																														g		MODIFIED PIPE HEADWALL (900 mm)
												85		1			1.97																					0.45	4.46				25	36	59	a	"NW1" 173+62.500	Mod G4-DI (H=2.44) GRATE TYPE 600-13
												85		1			1.97																					0.45	4.46							b		Mod G4-DI (H=2.44) GRATE TYPE 600-13
																					26.44																										c		450 mm APC
																						27.43																									d		600 mm APC
																																		18.1			60.7										e		RSP (LIGHT, METHOD B)
																										1																					f		600 mm AFES
																																								83.28			25	37	60	a	"NW1" 174+91.660	JACKED 900 mm RCP (CLASS III)
																	1.95																														b		MODIFIED PIPE HEADWALL (900 mm)
											3.05																																				c		CABLE RAILING
																																		9.2			25.1										d		RSP (LIGHT, METHOD B)
																																		9.2			25.1										e		RSP (LIGHT, METHOD B)
											3.05																																				f		CABLE RAILING
																	1.95																														g		MODIFIED PIPE HEADWALL (900 mm)
																																								121.92			25	38	61	a	"NW1" 176+12.665	JACKED 900 mm RCP (CLASS III)
																	1.95																														b		MODIFIED PIPE HEADWALL (900 mm)
											3.05																																				c		CABLE RAILING
																																		9.2			25.1										d		RSP (LIGHT, METHOD B)
																																		9.2			25.1										e		RSP (LIGHT, METHOD B)
											3.05																																				f		CABLE RAILING
																	1.95																														g		MODIFIED PIPE HEADWALL (900 mm)
				11.5																																						26	39	62	a	"D" 20+27.898	REMOVE CULVERT (450 mm)
																					10.67																										b		450 mm APC
																	0.83																														c		MODIFIED PIPE HEADWALL (450 mm)
																									1																						d		450 mm AFES
																																		5.6			20.3										e		RSP (LIGHT, METHOD B)
																																		1.7			7.5										f		RSP (LIGHT, METHOD B)
				11.5							18.30	170		2			16.47				37.11	27.43			1	1								80.6			239.1	0.90	8.92	273.78			SHEET TOTAL					

DRAINAGE QUANTITIES
DQ-10

STATE OF CALIFORNIA - DEPARTMENT OF TRANSPORTATION
Caltrans 03-DESIGN EAST

FUNCTIONAL SUPERVISOR: DOUGLAS S. JONES
CALCULATED-DESIGNED BY: KAO THAO
CHECKED BY: SCOTT FOSTER
REVISED BY: MGA
DATE REVISED: 05-30-11

LAST REVISION 11-30-11
DATE PLOTTED => 28-JAN-2012
TIME PLOTTED => 06:11

Dist	COUNTY	ROUTE	KILOMETER POST TOTAL PROJECT	SHEET No.	TOTAL SHEETS
01	Men	101	R69.4/R78.9	399	939

Mitch Andrus 9-22-11
REGISTERED CIVIL ENGINEER DATE

1-23-12
PLANS APPROVAL DATE

REGISTERED PROFESSIONAL ENGINEER MITCH ANDRUS No. C48753 Exp. 9-30-12 CIVIL STATE OF CALIFORNIA

THE STATE OF CALIFORNIA OR ITS OFFICERS OR AGENTS SHALL NOT BE RESPONSIBLE FOR THE ACCURACY OR COMPLETENESS OF ELECTRONIC COPIES OF THIS PLAN SHEET.

Caltrans Metric

DRAINAGE QUANTITIES

		REMOVE ITEMS						Misc ITEMS							CONCRETE AND STEEL						APC				AFES				RCP		CFES	RSP									JACKED PIPE							
ABANDON CULVERT	ABANDON RCB	REMOVE RCB CULVERT	REMOVE WINGWALL	REMOVE CULVERT	REMOVE INLET	REMOVE FES	REMOVE HEADWALL	NPS 6 SUPPLY LINE (BRIDGE)	(N) SLURRY BACKFILL	(N) MINOR CONCRETE	CABLE RAILING	MISCELLANEOUS IRON AND STEEL	DRAINAGE INLET MARKER (STAMPED CONCRETE INLET)	DRAINAGE INLET MARKER (PLASTIC)	CLASS 2 CONCRETE (WINGWALLS)	CLASS 1 CONCRETE (BOX CULVERT)	MINOR CONCRETE (MINOR STRUCTURE)	MINOR CONCRETE (MISCELLANEOUS CONSTRUCTION)	BAR REINFORCING STEEL (WINGWALLS)	BAR REINFORCING STEEL (BOX CULVERT)	450 mm ALTERNATIVE PIPE CULVERT	600 mm ALTERNATIVE PIPE CULVERT	900 mm ALTERNATIVE PIPE CULVERT	1200 mm ALTERNATIVE PIPE CULVERT	450 mm ALTERNATIVE FLARED END SECTION	600 mm ALTERNATIVE FLARED END SECTION	900 mm ALTERNATIVE FLARED END SECTION	1200 mm ALTERNATIVE FLARED END SECTION	900 mm REINFORCED CONCRETE PIPE	1050 mm REINFORCED CONCRETE PIPE	900 mm CONCRETE FLARED END SECTION	CLEAN SAND AND GRAVEL	RSP (BACKING No. 1, METHOD B)	RSP (LIGHT, METHOD B)	RSP (1/4 T, METHOD B)	RSP (1/2 T, METHOD A)	RSP (1 T, METHOD B)	RSP FABRIC	(N) PERMEABLE MATERIAL	(N) PERMEABLE MATERIAL FABRIC	900 mm REINFORCED CONCRETE PIPE (CLASS III)	1200 mm REINFORCED CONCRETE PIPE (CLASS III)	80 mm PLASTIC PIPE (OUTLET)	DRAINAGE PLAN SHEET No.	DRAINAGE PROFILE No.	DRAINAGE SYSTEM No.	DRAINAGE UNIT	STATION	DESCRIPTION
m	EA	EA	EA	m	EA	EA	EA	m	m^3	m^3	m	kg	EA	EA	m^3	m^3	m^3	m^3	kg	kg	m	m	m	m	EA	EA	EA	EA	m	m	EA	m^3	m^3	m^3	m^3	m^3	m^3	m^2	m^3	m^2	m	m	m						
						1																																				26	39	63	a	"D1" 21+68.638	REMOVE FES
																									1																				b		600 mm AFES
																																		3.6			13.4								c		RSP (LIGHT, METHOD B)
																						24.38																							d		600 mm APC
				20.3																																									e		REMOVE CULVERT (450 mm)
																																		2.5			10.0								f		RSP (LIGHT, METHOD B)
																									1																				g		600 mm AFES
						1																																							h		REMOVE FES
																									1																		26	39	64	a	"D1" 23+22.577	600 mm AFES
																																		3.6			13.4								b		RSP (LIGHT, METHOD B)
																						24.38																							c		600 mm APC
				15.6																																									d		REMOVE CULVERT (450 mm)
					1																																								e		REMOVE INLET
													1					1.50																											f		CONCRETE APRON (G1-DI)
												85				0.86																													g		G1-DI (H=1.22) GRATE TYPE 600-13
												68		1		1.14																										27	40	65	a	"D1" 23+74.299	G5-DI (H=1.52) GRATE TYPE 450-10
												68		1		1.31																													b		G5-DI (H=1.83) GRATE TYPE 450-10
												68		1		1.14																													c		G5-DI (H=1.52) GRATE TYPE 450-10
																					6.10																								d		450 mm APC
												68		1		1.05																													e		G5-DI (H=1.37) GRATE TYPE 450-10
																					6.10																								f		450 mm APC
																						6.10																							g		600 mm APC
																									1																				h		600 mm AFES
																																		3.6			20.5								i		RSP (LIGHT, METHOD B)
																						14.90																							j		600 mm APC
																									1																		27	40	66	a	"RA6" 61+20.908	600 mm AFES
																																		5.7			15.5								b		RSP (LIGHT, METHOD B)
																						27.43																							c		600 mm APC
				16.1																																									d		REMOVE CULVERT (450 mm)
					1																																								e		REMOVE INLET
													1					1.50																											f		CONCRETE APRON (G1-DI)
												85				0.86																													g		G1-DI (H=1.22) GRATE TYPE 600-13
				52.0	2	2						442	2	4		6.36	3.00			12.20	97.19			5								19.0				72.8						SHEET TOTAL					

STATE OF CALIFORNIA - DEPARTMENT OF TRANSPORTATION
Caltrans 03-DESIGN EAST

FUNCTIONAL SUPERVISOR: DOUGLAS S. JONES
CALCULATED-DESIGNED BY: KAO THAO
CHECKED BY: SCOTT FOSTER
REVISED BY: MGA
DATE REVISED: 05-30-11

LAST REVISION 11-30-11 | DATE PLOTTED => 28-JAN-2012 | TIME PLOTTED => 06:11

DRAINAGE QUANTITIES
DQ-11

Dist	COUNTY	ROUTE	KILOMETER POST TOTAL PROJECT	SHEET No.	TOTAL SHEETS
01	Men	101	R69.4/R78.9	400	939

Mitch Andrus 9-22-11
REGISTERED CIVIL ENGINEER DATE

1-23-12
PLANS APPROVAL DATE

REGISTERED PROFESSIONAL ENGINEER MITCH ANDRUS No. C48753 Exp. 9-30-12 CIVIL STATE OF CALIFORNIA

THE STATE OF CALIFORNIA OR ITS OFFICERS OR AGENTS SHALL NOT BE RESPONSIBLE FOR THE ACCURACY OR COMPLETENESS OF ELECTRONIC COPIES OF THIS PLAN SHEET.

Caltrans Metric

DRAINAGE QUANTITIES

		REMOVE ITEMS						Misc ITEMS							CONCRETE AND STEEL						APC				AFES				RCP		CFES	RSP									JACKED PIPE							
ABANDON CULVERT	ABANDON RCB	REMOVE RCB CULVERT	REMOVE WINGWALL	REMOVE CULVERT	REMOVE INLET	REMOVE FES	REMOVE HEADWALL	NPS 6 SUPPLY LINE (BRIDGE)	(N) SLURRY BACKFILL	(N) MINOR CONCRETE	CABLE RAILING	MISCELLANEOUS IRON AND STEEL	DRAINAGE INLET MARKER (STAMPED CONCRETE INLET)	DRAINAGE INLET MARKER (PLASTIC)	CLASS 2 CONCRETE (WINGWALLS)	CLASS 1 CONCRETE (BOX CULVERT)	MINOR CONCRETE (MINOR STRUCTURE)	MINOR CONCRETE (MISCELLANEOUS CONSTRUCTION)	BAR REINFORCING STEEL (WINGWALLS)	BAR REINFORCING STEEL (BOX CULVERT)	450 mm ALTERNATIVE PIPE CULVERT	600 mm ALTERNATIVE PIPE CULVERT	900 mm ALTERNATIVE PIPE CULVERT	1200 mm ALTERNATIVE PIPE CULVERT	450 mm ALTERNATIVE FLARED END SECTION	600 mm ALTERNATIVE FLARED END SECTION	900 mm ALTERNATIVE FLARED END SECTION	1200 mm ALTERNATIVE FLARED END SECTION	900 mm REINFORCED CONCRETE PIPE	1050 mm REINFORCED CONCRETE PIPE	900 mm CONCRETE FLARED END SECTION	CLEAN SAND AND GRAVEL	RSP (BACKING No. 1, METHOD B)	RSP (LIGHT, METHOD B)	RSP (1/4 T, METHOD B)	RSP (1/2 T, METHOD A)	RSP (1 T, METHOD B)	RSP FABRIC	(N) PERMEABLE MATERIAL	(N) PERMEABLE MATERIAL FABRIC	900 mm REINFORCED CONCRETE PIPE (CLASS III)	1200 mm REINFORCED CONCRETE PIPE (CLASS III)	80 mm PLASTIC PIPE (OUTLET)	DRAINAGE PLAN SHEET No.	DRAINAGE PROFILE No.	DRAINAGE SYSTEM No.	DRAINAGE UNIT	STATION	DESCRIPTION
m	EA	EA	EA	m	EA	EA	EA	m	m^3	m^3	m	kg	EA	EA	m^3	m^3	m^3	m^3	kg	kg	m	m	m	m	EA	EA	EA	EA	m	m	EA	m^3	m^3	m^3	m^3	m^3	m^3	m^2	m^3	m^2	m	m	m						
												68		1			1.72																										27	41	67	a	"RA2" 24+52.581	G4-DI (H=1.37) GRATE TYPE 450-10
																					14.63																									b		450 mm APC
																									1																					c		450 mm AFES
																																		3.8			15.2									d		RSP (LIGHT, METHOD B)
												68		1			1.47																													e		G4-DI (H=1.61) GRATE TYPE 450-10
																					14.71																									f		450 mm APC
																					14.04																									g		450 mm APC
												68		1			1.32																													h		G4-DI (H=1.37) GRATE TYPE 450-10
												85		1			0.94																										27	42	68	a	"QM1" 177+43.077	G3-DI (H=1.37) GRATE TYPE 600-13
												85		1			0.94																													b		G3-DI (H=1.37) GRATE TYPE 600-13
																					12.19																									c		450 mm APC
																					9.14																									d		450 mm APC
																																		8.5			32.3									e		RSP (LIGHT, METHOD B)
																									1																					f		450 mm AFES
												68		1			1.52																										27	43	69	a	"RA5" 51+74.243	G4-DI (H=1.83) GRATE TYPE 450-10
												68		1			1.32																													b		G4-DI (H=1.52) GRATE TYPE 450-10
												68		1			1.32																													c		G4-DI (H=1.37) GRATE TYPE 450-10
																					14.11																									d		450 mm APC
																					13.21																									e		450 mm APC
																					13.11																									f		450 mm APC
																									1																					g		450 mm AFES
																																		1.7			7.5									h		RSP (LIGHT, METHOD B)
												68		1			1.32																													i		G4-DI (H=1.37) GRATE TYPE 450-10
																					39.75																									j		450 mm APC
												68		1			1.05																										27	44	70	a	"RA5" 50+43.500	G5-DI (H=1.37) GRATE TYPE 450-10
																					12.19																									b		450 mm APC
												68		1			1.31																													c		G5-DI (H=1.83) GRATE TYPE 450-10
																																		4.0			16.8									d		RSP (LIGHT, METHOD B)
																									1																					e		450 mm AFES
																					6.10																									f		450 mm APC
			1																																								27	44	71	a	"F" 10+71.271	REMOVE WINGWALL (25.0 m3)
		1																																												b		REMOVE RCB CULVERT (35.0 m3)
			1																																										c		REMOVE WINGWALL (25.0 m3)
																						18.29																					27	44	72	a	"GW" 11+49.560	600 mm APC
																	1.07																													b		MODIFIED PIPE HEADWALL (600 mm)
																																		3.1			11.7									c		RSP (LIGHT, METHOD B)
																																		2.3			9.2									d		RSP (LIGHT, METHOD B)
																	1.07																													e		MODIFIED PIPE HEADWALL (600 mm)
		1	2									782		11			16.37				163.18	18.29			4									23.4			92.7						SHEET TOTAL					

DRAINAGE QUANTITIES
DQ-12

STATE OF CALIFORNIA - DEPARTMENT OF TRANSPORTATION
Caltrans 03-DESIGN EAST

FUNCTIONAL SUPERVISOR: DOUGLAS S. JONES
CALCULATED-DESIGNED BY: KAO THAO
CHECKED BY: SCOTT FOSTER
REVISED BY: MGA
DATE REVISED: 05-30-11

LAST REVISION 11-30-11
DATE PLOTTED => 28-JAN-2012
TIME PLOTTED => 06:11