Dist	COUNTY	ROUTE	POST MILES TOTAL PROJECT	SHEET No.	TOTAL SHEETS
01	Men	1, 101	Var	1	36

INDEX OF PLANS

SHEET No.	DESCRIPTION
1	TITLE AND LOCATION MAP
2	TYPICAL CROSS SECTIONS
3-4	LAYOUTS
5	CONSTRUCTION DETAILS
6	UTILITY PLAN
7	CONSTRUCTION AREA SIGNS
8-10	TRAFFIC HANDLING PLAN AND QUANTITIES
11	PAVEMENT DELINEATION PLAN
12	SUMMARY OF QUANTITIES
13-30	REVISED STANDARD PLANS

STRUCTURE PLANS

31-36	GENERAL PLANS AND DETAILS

THE STANDARD PLANS LIST APPLICABLE TO THIS CONTRACT IS INCLUDED IN THE NOTICE TO BIDDERS AND SPECIAL PROVISIONS BOOK.

STATE OF CALIFORNIA

DEPARTMENT OF TRANSPORTATION

PROJECT PLANS FOR CONSTRUCTION ON

STATE HIGHWAY

IN MENDOCINO COUNTY AT VARIOUS LOCATIONS

TO BE SUPPLEMENTED BY STANDARD PLANS DATED 2010

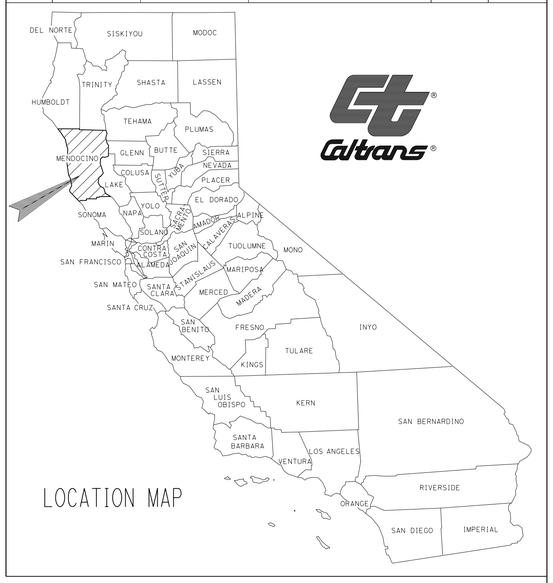

LOCATION MAP

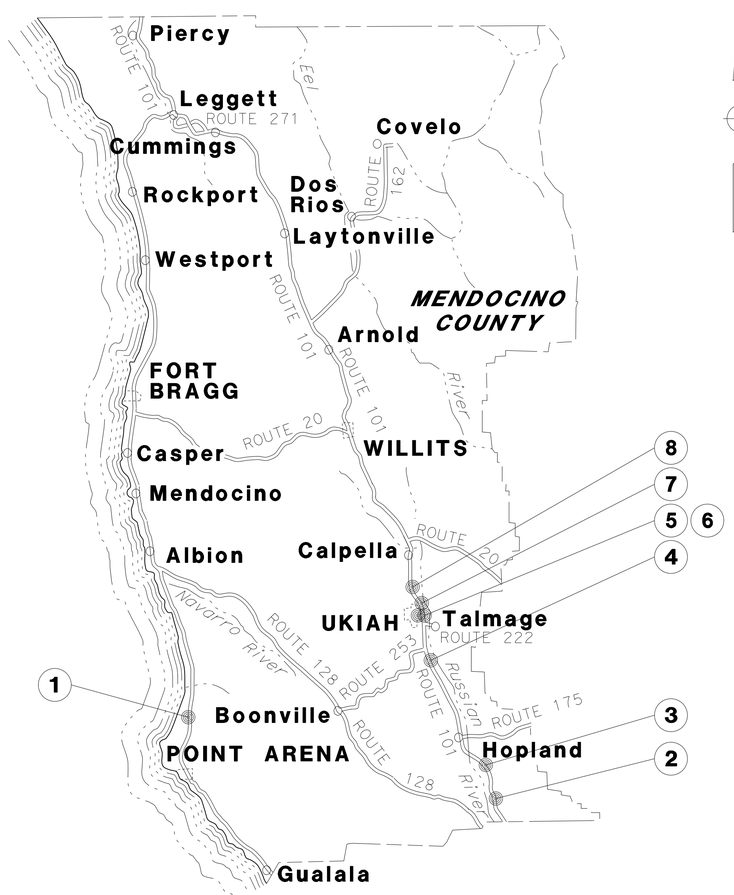

NO SCALE

LOCATIONS OF CONSTRUCTION

LOCATION	COUNTY	ROUTE	PM	BRIDGE NAME	BRIDGE No.
1	Men	001	20.83	BRUSH CREEK	10-0115
2	Men	101	2.47	COMMINSKEY SIDEHILL VIADUCT	10-0268
3	Men	101	4.95	FROG WOMAN ROCK SIDEHILL VIADUCT	10-0289
4	Men	101	20.71	ROBINSON OC	10-0086
5	Men	101	R23.59	DOOLIN CREEK	10-0190R
6	Men	101	R23.59	DOOLIN CREEK	10-0190L
7	Men	101	R24.06	GOBBI STREET OC	10-0191
8	Men	101	R26.16	NORTH STATE STREET UC	10-0196L

PROJECT ENGINEER REGISTERED CIVIL ENGINEER — DATE

February 22, 2016

PLANS APPROVAL DATE

REGISTERED PROFESSIONAL ENGINEER — BRENDA HARWELL — No. 64471 — Exp. 6-30-17 — CIVIL — STATE OF CALIFORNIA

THE STATE OF CALIFORNIA OR ITS OFFICERS OR AGENTS SHALL NOT BE RESPONSIBLE FOR THE ACCURACY OR COMPLETENESS OF SCANNED COPIES OF THIS PLAN SHEET.

PROJECT MANAGER TOM FITZGERALD

DESIGN ENGINEER TOM FITZGERALD

THE CONTRACTOR SHALL POSSESS THE CLASS (OR CLASSES) OF LICENSE AS SPECIFIED IN THE "NOTICE TO BIDDERS."

CONTRACT No.	01-0E5804
PROJECT ID	0114000103

LAST REVISION 02-24-14

DATE PLOTTED => 25-FEB-2016
TIME PLOTTED => 07:27

NOTES:

1. DIMENSIONS OF THE PAVEMENT STRUCTURES (STRUCTURAL SECTIONS) ARE SUBJECT TO TOLERANCES SPECIFIED IN THE STANDARD SPECIFICATIONS.
2. FOR DETAILS NOT SHOWN SEE STRUCTURES PLANS.

PAVEMENT CLIMATE REGION

NORTH COAST

ROUTE 1
DESIGN DESIGNATION

PM 20.83

2014 ADT= 1600 D= 60%
2037 ADT= 2340 T= 3%
2017 DHV= 230 V= 55 MPH (DESIGN SPEED)
2037 TI_{20} = 7.5

Dist	COUNTY	ROUTE	POST MILES TOTAL PROJECT	SHEET No.	TOTAL SHEETS
01	Men	1,101	Var	2	36

REGISTERED CIVIL ENGINEER DATE

February 22, 2016
PLANS APPROVAL DATE

REGISTERED PROFESSIONAL ENGINEER
BRENDA HARWELL
No. 64471
Exp. 6-30-17
CIVIL
STATE OF CALIFORNIA

THE STATE OF CALIFORNIA OR ITS OFFICERS OR AGENTS SHALL NOT BE RESPONSIBLE FOR THE ACCURACY OR COMPLETENESS OF SCANNED COPIES OF THIS PLAN SHEET.

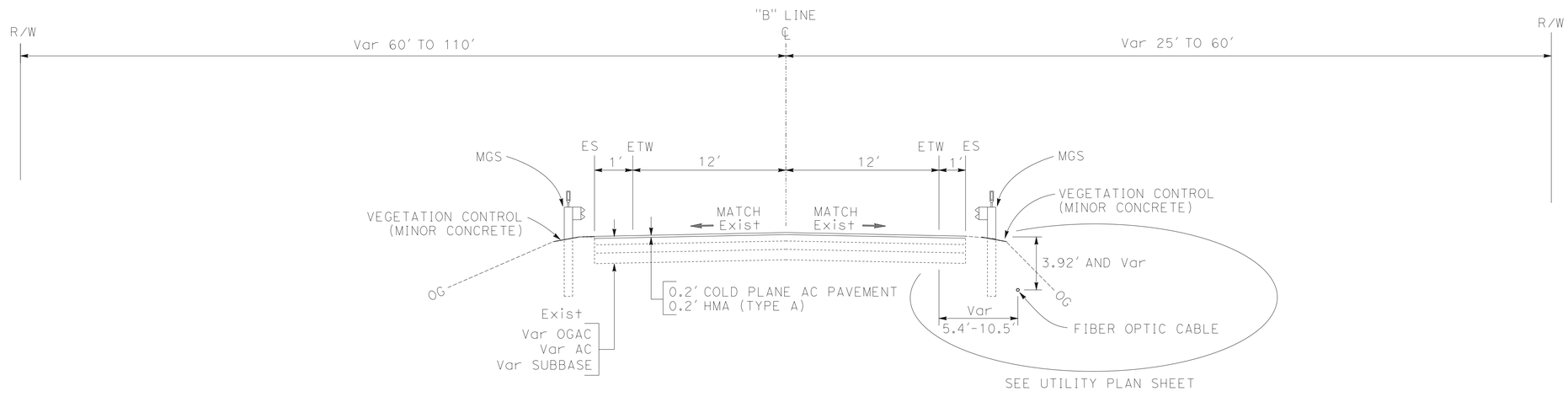

PM 20.8

"B" 103+74.62 TO "B" 104+89.05
"B" 106+23.95 TO "B" 107+38.39

ROUTE 1
LOCATION 1

TYPICAL CROSS SECTIONS

NO SCALE

X-1

REVISED BY | DATE REVISED
BRENDA HARWELL | CHRIS GHIDINELLI
CALCULATED-DESIGNED BY | CHECKED BY
FUNCTIONAL SUPERVISOR
TOM FITZGERALD

STATE OF CALIFORNIA - DEPARTMENT OF TRANSPORTATION
Caltrans® MAINTENANCE DESIGN

P:\PROJ\01\0e580\drafting\sheets\0114000103ca001.dgn

LAST REVISION 00-00-00 | DATE PLOTTED => 25-FEB-2016 TIME PLOTTED => 07:28

BORDER LAST REVISED 7/2/2010 | USERNAME => s120115 DGN FILE => 0114000103ca001.dgn | RELATIVE BORDER SCALE IS IN INCHES 0 1 2 3 | UNIT 0052 | PROJECT NUMBER & PHASE 01140001031

Dist	COUNTY	ROUTE	POST MILES TOTAL PROJECT	SHEET No.	TOTAL SHEETS
01	Men	1,101	Var	3	36

REGISTERED CIVIL ENGINEER DATE

February 22, 2016
PLANS APPROVAL DATE

REGISTERED PROFESSIONAL ENGINEER BRENDA HARWELL No. 64471 Exp. 6-30-17 CIVIL STATE OF CALIFORNIA

THE STATE OF CALIFORNIA OR ITS OFFICERS OR AGENTS SHALL NOT BE RESPONSIBLE FOR THE ACCURACY OR COMPLETENESS OF SCANNED COPIES OF THIS PLAN SHEET.

NOTES:

1. FOR ACCURATE RIGHT OF WAY DATA, CONTACT RIGHT OF WAY ENGINEERING AT THE DISTRICT OFFICE.
2. EXISTING UTILITY FACILITIES HAVE NOT BEEN PLOTTED ON THIS SHEET.

ABBREVIATION:

AFTS ALTERNATIVE FLARED TERMINAL SYSTEM

LEGEND:

STAGING

CONFORM

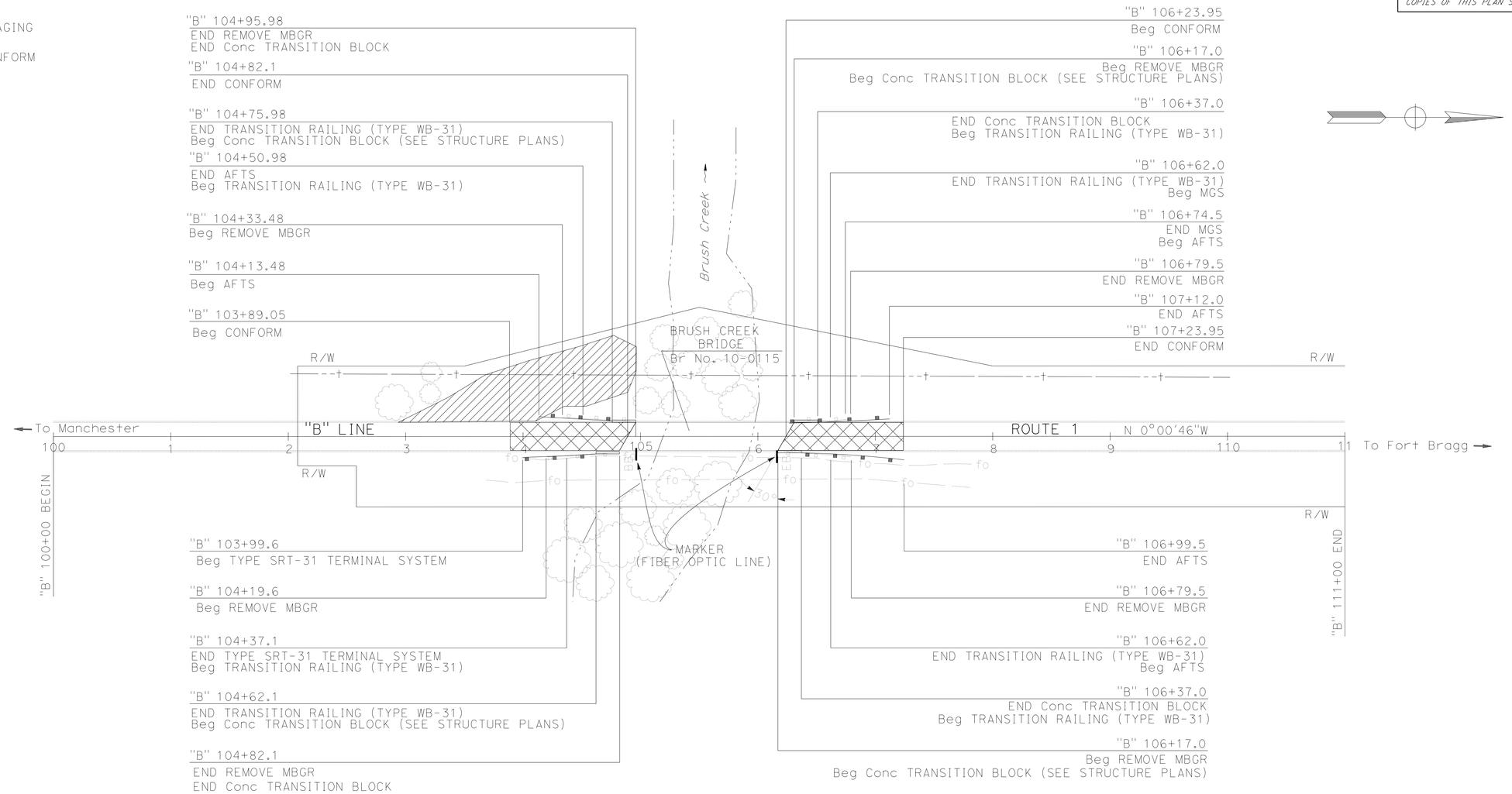

LOCATION 1

LAYOUT

SCALE: 1" = 50'

L-1

REVISED BY	DATE REVISED
BRENDA HARWELL	CHRIS GHIDINELLI

CALCULATED-DESIGNED BY | CHECKED BY

FUNCTIONAL SUPERVISOR: TOM FITZGERALD

STATE OF CALIFORNIA - DEPARTMENT OF TRANSPORTATION

Caltrans® MAINTENANCE DESIGN

P:\PROJ\01\0e580\drafting\sheets\0114000103ea001.dgn

LAST REVISION 00-00-00 | DATE PLOTTED => 25-FEB-2016 TIME PLOTTED => 07:28

BORDER LAST REVISED 7/2/2010 | USERNAME => s120115 DGN FILE => 0114000103ea001.dgn | RELATIVE BORDER SCALE IS IN INCHES 0 1 2 3 | UNIT 0052 | PROJECT NUMBER & PHASE 01140001031

Dist	COUNTY	ROUTE	POST MILES TOTAL PROJECT	SHEET No.	TOTAL SHEETS
01	Men	1,101	Var	4	36

REGISTERED CIVIL ENGINEER DATE

February 22, 2016
PLANS APPROVAL DATE

REGISTERED PROFESSIONAL ENGINEER BRENDA HARWELL No. 64471 Exp. 6-30-17 CIVIL STATE OF CALIFORNIA

THE STATE OF CALIFORNIA OR ITS OFFICERS OR AGENTS SHALL NOT BE RESPONSIBLE FOR THE ACCURACY OR COMPLETENESS OF SCANNED COPIES OF THIS PLAN SHEET.

NOTE:

FOR ACCURATE RIGHT OF WAY AND ACCESS DATA, CONTACT RIGHT OF WAY ENGINEERING AT THE DISTRICT OFFICE.

LEGEND

- CHANNELIZER (SURFACE MOUNTED)
- XX STRIPING DETAIL

CURVE DATA

No. ⊕	R	Δ	T	L
1	1200′	52°31′16″	592.05′	1100.00′

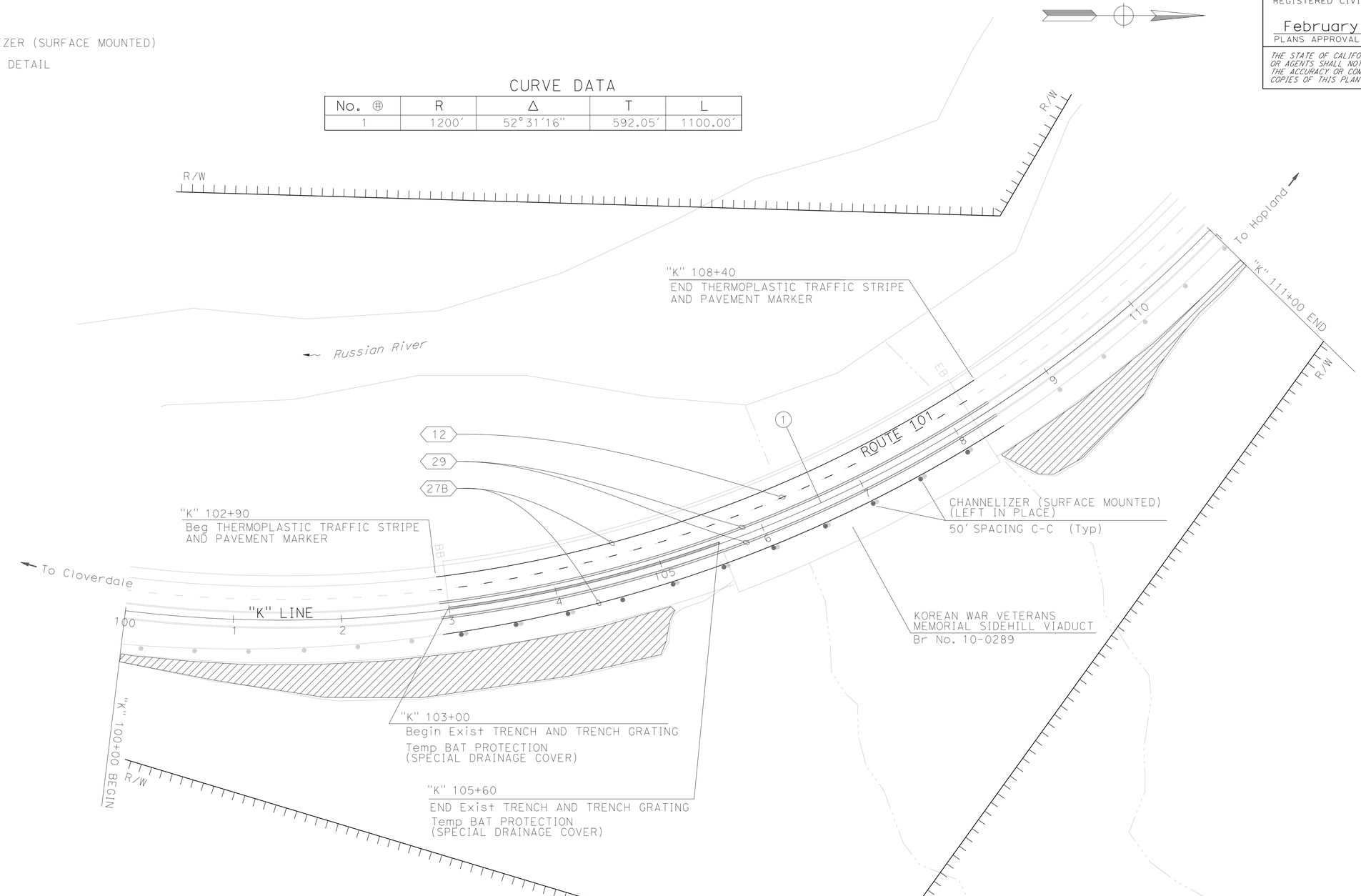

LOCATION 3

LAYOUT

SCALE: 1" = 50′

L-2

REVISED BY | DATE REVISED
BRENDA HARWELL | CHRIS GHIDINELLI
CALCULATED-DESIGNED BY | CHECKED BY
FUNCTIONAL SUPERVISOR
TOM FITZGERALD

STATE OF CALIFORNIA - DEPARTMENT OF TRANSPORTATION
Caltrans® MAINTENANCE DESIGN

P:\PROJ\01\0e580\drafting\sheets\0114000103ea002.dgn

LAST REVISION 00-00-00 | DATE PLOTTED => 25-FEB-2016 | TIME PLOTTED => 07:28

BORDER LAST REVISED 7/2/2010 | USERNAME => s120115 | DGN FILE => 0114000103ea002.dgn | RELATIVE BORDER SCALE IS IN INCHES 0 1 2 3 | UNIT 0052 | PROJECT NUMBER & PHASE 01140001031

Dist	COUNTY	ROUTE	POST MILES TOTAL PROJECT	SHEET No.	TOTAL SHEETS
01	Men	1,101	Var	5	36

REGISTERED CIVIL ENGINEER DATE

February 22, 2016
PLANS APPROVAL DATE

REGISTERED PROFESSIONAL ENGINEER BRENDA HARWELL No. 64471 Exp. 6-30-17 CIVIL STATE OF CALIFORNIA

THE STATE OF CALIFORNIA OR ITS OFFICERS OR AGENTS SHALL NOT BE RESPONSIBLE FOR THE ACCURACY OR COMPLETENESS OF SCANNED COPIES OF THIS PLAN SHEET.

NOTES:

1. GRIND EXISTING SURFACES TO ACCOMODATE A MINIMUM TAPER THICKNESS OF 0.10′ WHEN EITHER:
   A. HMA MATERIAL SUCH AS RUBBERIZED, POLYMER MODIFIED OR OPEN GRADED IS UNSUITABLE FOR RAKING TO A MAXIMUM 0.02′ THICKNESS AT THE CONFORM.
   B. TEMPORARY TAPER WILL BE IN PLACE FOR MORE THAN 14 DAYS.
2. PERMANENT SURFACE MAY BE EXISTING OR NEW PAVEMENT.
3. ROADWAY SURFACE IS THE TOP OF EXISTING SURFACE OR THE TOP OF THE PLANED SURFACE.
4. FOR TEMPORARY TAPERS ON BRIDGE DECKS AND APPROACH SLABS, CONSTRUCT TEMPORARY TAPERS WITH POLYESTER CONCRETE.
5. IF AUTHORIZED, YOU MAY USE ALTERNATIVE MATERIALS OR METHODS TO PRODUCE THE REQUIRED TAPER.

LEGEND

HMA MATERIAL (TEMPORARY TAPER) (SEE NOTE 4)

IF NECESSARY, COLD PLANE ASPHALT CONCRETE PAVEMENT AND PLACE HMA MATERIAL (SEE NOTE 1)

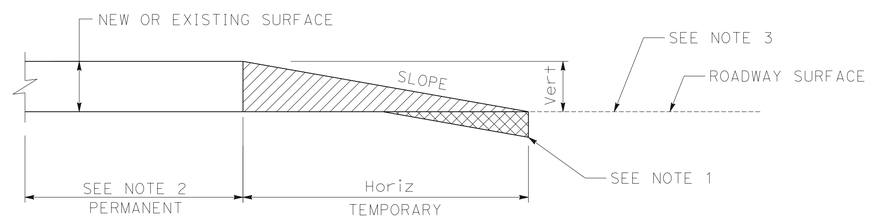

Vert	SLOPE RATIO Horiz/Vert
0-0.10′	70:1
GREATER THAN 0.10′	160:1

TYPICAL PAVING CONFORM FOR TEMPORARY CONSTRUCTION TAPERS

CONSTRUCTION DETAILS

NO SCALE

C-1

REVISED BY | DATE REVISED
BRENDA HARWELL | CHRIS GHIDINELLI
CALCULATED-DESIGNED BY | CHECKED BY
FUNCTIONAL SUPERVISOR
TOM FITZGERALD

STATE OF CALIFORNIA - DEPARTMENT OF TRANSPORTATION
Caltrans MAINTENANCE DESIGN

P:\PROJ\01\0e580\drafting\sheets\01140001031ga001.dgn

LAST REVISION 00-00-00 | DATE PLOTTED => 25-FEB-2016 | TIME PLOTTED => 07:28

Dist	COUNTY	ROUTE	POST MILES TOTAL PROJECT	SHEET No.	TOTAL SHEETS
01	Men	1,101	Var	6	36

REGISTERED CIVIL ENGINEER DATE

February 22, 2016
PLANS APPROVAL DATE

REGISTERED PROFESSIONAL ENGINEER BRENDA HARWELL No. 64471 Exp. 6-30-17 CIVIL STATE OF CALIFORNIA

THE STATE OF CALIFORNIA OR ITS OFFICERS OR AGENTS SHALL NOT BE RESPONSIBLE FOR THE ACCURACY OR COMPLETENESS OF SCANNED COPIES OF THIS PLAN SHEET.

NOTES:

1. FOR ACCURATE RIGHT OF WAY DATA, CONTACT RIGHT OF WAY ENGINEERING AT THE DISTRICT OFFICE.
2. COORDINATE VALUES SHOWN ARE CCS83, ZONE 2.
3. ELEVATION IS BASED ON NAVD88 DATUM.
4. ELEVATIONS SHOWN REFER TO THE TOP OF PIPE OR CONDUIT, UNLESS OTHERWISE STATED.
5. UTILITY OWNERSHIP ON THIS PROJECT ARE AS SHOWN:
   ELECTRICAL - PACIFIC GAS & ELECTRIC (PG&E)
   TELEPHONE - AMERICAN TELEPHONE & TELEGRAPH (AT&T)
   COMMUNICATION - LEVEL 3 COMMUNICATIONS
   COMMUNICATION - AT&T
6. LEVEL 3 COMMUNICATIONS UNDERGROUND UTILITIES HAVE BEEN VERIFIED BY POTHOLING.

LEGEND

- STAGING
- CONFORM
- POTHOLE #
- UTILITY POLE
- Approx LIMITS OF EXCAVATION (SEE STRUCTURES PLANS)
- MANHOLE

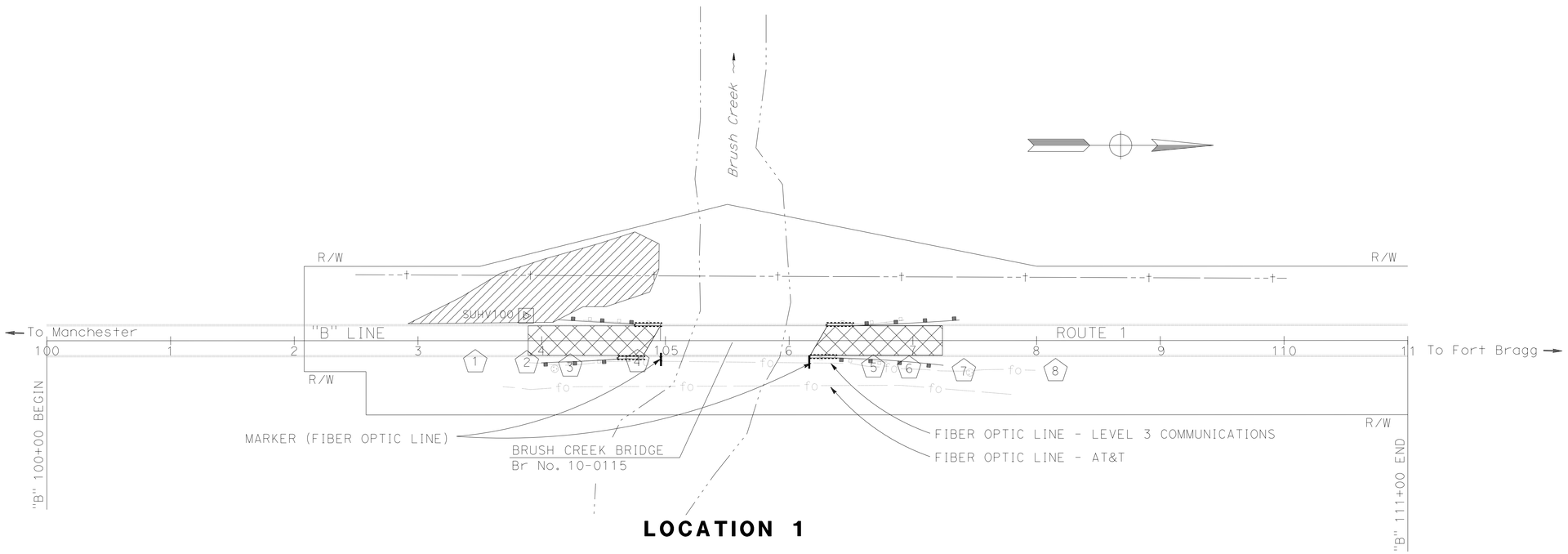

LOCATION 1

POSITIVE LOCATION INFORMATION

POTHOLE #	UTILITY	NORTHING	EASTING	ELEVATION OF EXISTING GROUND SURFACE (FT)	DEPTH OF EXISTING UTILITY (FT)	REMARKS
1	LEVEL 3 COMMUNICATIONS	2120187.48	6082126.67	84.09	*	POTHOLED 7 FEET AND 3 FT HORIZONTAL SWEEP. DID NOT LOCATE.
2	LEVEL 3 COMMUNICATIONS	2120229.21	6082127.45	82.34	*	SLURRY FOUND AT A DEPTH OF 2 FEET.
3	LEVEL 3 COMMUNICATIONS	2120264.28	6082130.10	80.63	*	SLURRY FOUND AT A DEPTH OF 2 FEET.
4	LEVEL 3 COMMUNICATIONS	2120318.60	6082126.53	80.05	3.92	TOP OF PIPE
5	LEVEL 3 COMMUNICATIONS	2120509.23	6082130.84	76.78	*	POTHOLED 5.67 FEET AND HORIZONTAL SWEEP. DID NOT LOCATE.
6	LEVEL 3 COMMUNICATIONS	2120538.15	6082131.64	76.46	*	POTHOLED 5.67 FEET AND HORIZONTAL SWEEP. DID NOT LOCATE.
7	LEVEL 3 COMMUNICATIONS	2120582.41	6082133.88	76.68	*	SLURRY FOUND AT A DEPTH OF 1.75 FEET.
8	LEVEL 3 COMMUNICATIONS	2120656.52	6082133.81	76.64	*	POTHOLED 6.92 FEET AND HORIZONTAL SWEEP. DID NOT LOCATE.
N/A	TEMPORARY BENCHMARK	2120228.56	6082089.38	83.16		

* DID NOT LOCATE UTILITY

UTILITY PLAN

SCALE: 1" = 50'

U-1

APPROVED FOR UTILITY INFORMATION ONLY

REVISED BY | DATE REVISED
BRENDA HARWELL | CHRIS GHIDINELLI
CALCULATED-DESIGNED BY | CHECKED BY
FUNCTIONAL SUPERVISOR
TOM FITZGERALD

STATE OF CALIFORNIA - DEPARTMENT OF TRANSPORTATION
Caltrans® MAINTENANCE DESIGN

P:\PROJ\01\0e580\drafting\sheets\0114000103ka001.dgn

LAST REVISION 00-00-00 | DATE PLOTTED => 25-FEB-2016 | TIME PLOTTED => 07:28

Dist	COUNTY	ROUTE	POST MILES TOTAL PROJECT	SHEET No.	TOTAL SHEETS
01	Men	1,101	Var	7	36

REGISTERED CIVIL ENGINEER DATE

February 22, 2016
PLANS APPROVAL DATE

REGISTERED PROFESSIONAL ENGINEER BRENDA HARWELL No. 64471 Exp. 6-30-17 CIVIL STATE OF CALIFORNIA

THE STATE OF CALIFORNIA OR ITS OFFICERS OR AGENTS SHALL NOT BE RESPONSIBLE FOR THE ACCURACY OR COMPLETENESS OF SCANNED COPIES OF THIS PLAN SHEET.

NOTES:

1. LOCATION OF CONSTRUCTION AREA SIGNS ARE APPROXIMATE. EXACT LOCATION TO BE DETERMINED BY THE ENGINEER.
2. EXISTING UTILITY FACILITIES ARE NOT SHOWN ON THESE PLANS.

LEGEND

ONE POST STATIONARY MOUNTED SIGN
TWO POST STATIONARY MOUNTED SIGN

STATIONARY MOUNTED CONSTRUCTION AREA SIGNS

SIGN NUMBER	SIGN CODE FEDERAL	SIGN CODE CALIFORNIA	PANEL SIZE	SIGN MESSAGE	NUMBER OF POSTS AND SIZE	NUMBER OF SIGNS (N)
A	W20-1		36" x 36"	ROAD WORK AHEAD	1 - 4" x 6"	2
		C23B(CA)	24" x 18"	BRIDGE REPAIR		
B	W20-1		48" x 48"	ROAD WORK AHEAD	1 - 6" x 6"	2
		C23B(CA)	36" x 24"	BRIDGE REPAIR		
C	W11-1		36" x 36"	BICYCLE SYMBOL	1 - 4" x 6"	4
	W16-1		24" x 30"	SHARE THE ROAD		
D	G20-2		36" x 18"	END ROAD WORK	1 - 4" x 4"	2
E	G20-2		48" x 24"	END ROAD WORK	1 - 4" x 6"	2
F	W20-1		36" x 36"	ROAD WORK AHEAD	1 - 4" x 6"	2
G		C40(CA)	108" x 42"	TRAFFIC FINES DOUBLED IN CONSTRUCTION ZONES	2 - 6" x 6"	2
H		C40(CA)	144" x 60"	TRAFFIC FINES DOUBLED IN CONSTRUCTION ZONES	2 - 6" x 8"	2

(N) NOT A SEPARATE PAY ITEM. FOR INFORMATION ONLY.

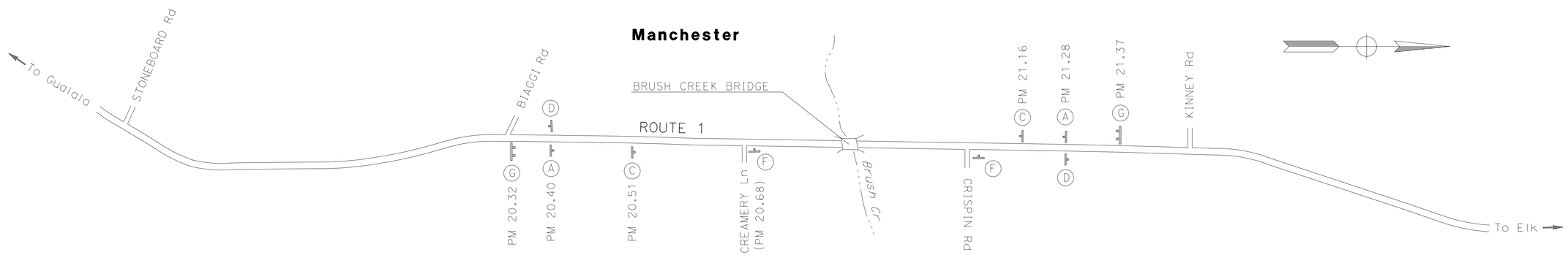

LOCATION 1 - BRUSH CREEK

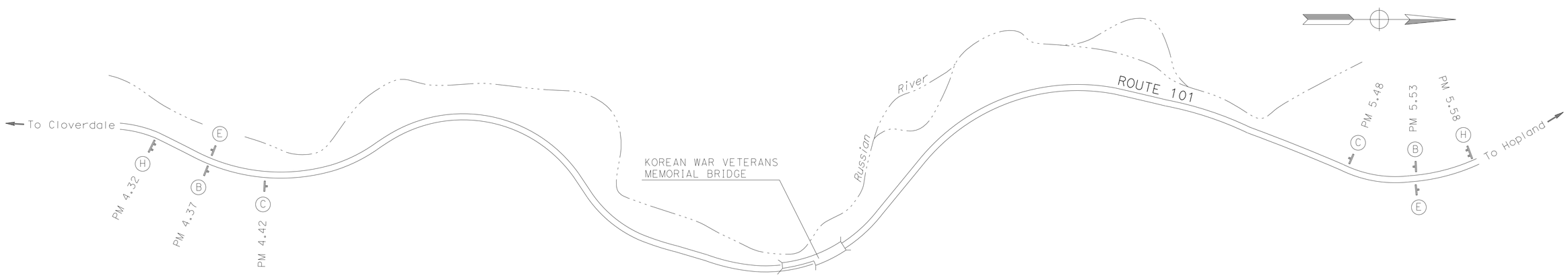

LOCATION 2 - KOREAN WAR VETERANS MEMORIAL BRIDGE

CONSTRUCTION AREA SIGNS

NO SCALE

APPROVED FOR CONSTRUCTION AREA SIGN WORK ONLY

CS-1

REVISED BY | DATE REVISED
BRENDA HARWELL | CHRIS GHIDINELLI
CALCULATED-DESIGNED BY | CHECKED BY
FUNCTIONAL SUPERVISOR
TOM FITZGERALD

STATE OF CALIFORNIA - DEPARTMENT OF TRANSPORTATION
Caltrans® MAINTENANCE DESIGN

P:\PROJ\01\0e580\drafting\sheets\01140001031a001.dgn

LAST REVISION 00-00-00 | DATE PLOTTED => 25-FEB-2016 | TIME PLOTTED => 07:28

Dist	COUNTY	ROUTE	POST MILES TOTAL PROJECT	SHEET No.	TOTAL SHEETS
01	Men	1,101	Var	8	36

Sheri M. Rodriguez 3-5-15
REGISTERED CIVIL ENGINEER DATE

February 22, 2016
PLANS APPROVAL DATE

REGISTERED PROFESSIONAL ENGINEER SHERI M. RODRIGUEZ No. C66861 Exp. 9-30-16 CIVIL STATE OF CALIFORNIA

THE STATE OF CALIFORNIA OR ITS OFFICERS OR AGENTS SHALL NOT BE RESPONSIBLE FOR THE ACCURACY OR COMPLETENESS OF SCANNED COPIES OF THIS PLAN SHEET.

NOTES:

1. CALIFORNIA CODES ARE DESIGNATED BY (CA). OTHERWISE, FEDERAL (MUTCD) CODES ARE SHOWN.
2. ALL SIGNS SHALL HAVE A BLACK LEGEND ON FLUORESCENT ORANGE BACKGROUND AND SHALL BE EQUIPPED WITH AT LEAST TWO 16" x 16" ORANGE FLAGS FOR DAYTIME CLOSURE OR FLASHING BEACONS FOR LANE CLOSURE DURING HOURS OF DARKNESS.
3. ALL CONES USED FOR LANE CLOSURES DURING THE HOURS OF DARKNESS SHALL BE FITTED WITH RETROREFLECTIVE BANDS OR SLEEVES.
4. WHEN A PILOT CAR IS USED, PLACE A C37 (CA) SIGN AT ALL INTERSECTIONS WITHIN TRAFFIC CONTROL AREA. WHERE VEHICULAR TRAFFIC CAN NOT EFFECTIVELY SELF-REGULATE, AT LEAST ONE FLAGGER SHALL BE USED AT EACH INTERSECTION WITHIN THE TRAFFIC CONTROL AREA.
5. FLAGGER SHOULD STAND IN A CONSPICUOUS PLACE, FACING TRAFFIC AT ALL TIMES, BE VISIBLE TO APPROACHING TRAFFIC AS WELL AS APPROACHING VEHICLES AFTER THE FIRST VEHICLE HAS STOPPED.
6. ADDITIONAL ADVANCE FLAGGERS ARE REQUIRED.
7. WHEN FLAGGER IS NOT VISIBLE FROM THIS LOCATION PLACE A C29 (CA) SIGN BELOW THE C9A (CA) SIGN.

LEGEND

- TRAFFIC CONE
- TEMPORARY SIGN
- DIRECTION OF TRAVEL
- PORTABLE FLASHING BEACON
- FLAGGER

SIGN PANEL SIZE (MINIMUM)

A	48" x 48" - SPEED OF 45 mph OR MORE 36" x 36" - SPEED LESS THAN 45 mph
B	30" x 30"
C	UNUSED
D	UNUSED
E	20" x 7"

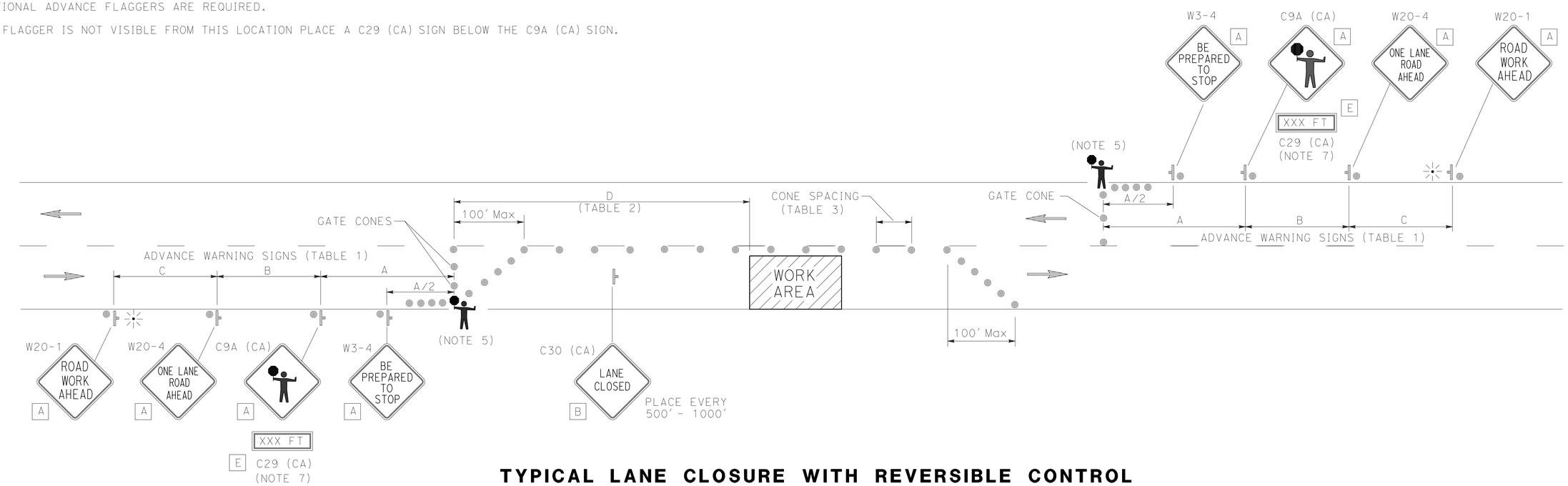

TYPICAL LANE CLOSURE WITH REVERSIBLE CONTROL

TABLE 1

ADVANCE WARNING SIGN SPACING

ROAD TYPE	Min A	Min B	Min C
	ft		
URBAN (25 mph OR LESS)	100	100	100
URBAN (30 mph TO 40 mph)	250	250	250
URBAN (MORE THAN 40 mph)	350	350	350
RURAL	500	500	500
EXPRESSWAY / FREEWAY	1000	1500	2640

TABLE 2

BUFFER SPACE

APPROACH SPEED	Min D	DOWNGRADE Min D		
		-3%*	-6%*	-9%*
mph	ft			
25 & BELOW	155	158	165	173
30	200	205	215	227
35	250	257	271	287
40	305	315	333	354
45	360	378	400	427
50	425	446	474	507
55	495	520	553	593
60	570	598	638	686
65	645	682	728	785

* USE ON SUSTAINED DOWNGRADE STEEPER THAN -3 PERCENT AND LONGER THAN 1 MILE.

TABLE 3

Max CONE SPACING

POSTED SPEED	TAPER	TANGENT	CONFLICT*
mph	ft		
20	20	40	10
25	25	50	12
30	30	60	15
35	35	70	17
40	40	80	20
45	45	90	22
50	50	100	25
55	55	110	27
60	60	120	30
65	65	130	32

* USE WHERE THERE IS A CONFLICT BETWEEN EXISTING PAVEMENT MARKINGS AND CHANNELIZERS.

TRAFFIC HANDLING PLAN

NO SCALE

APPROVED FOR TRAFFIC HANDLING WORK ONLY

TH-1

REVISED BY | DATE REVISED
SHERI M. RODRIGUEZ | TROY A. ARSENEAU
CALCULATED-DESIGNED BY | CHECKED BY
FUNCTIONAL SUPERVISOR | RICHARD MULLEN

STATE OF CALIFORNIA - DEPARTMENT OF TRANSPORTATION
Caltrans® TRAFFIC OPERATIONS

P:\PROJ\01\0e580\drafting\sheets\0114000103md001.dgn

LAST REVISION 03-05-15 | DATE PLOTTED => 25-FEB-2016 | TIME PLOTTED => 07:28

Dist	COUNTY	ROUTE	POST MILES TOTAL PROJECT	SHEET No.	TOTAL SHEETS
01	Men	1,101	Var	9	36

Sheri M. Rodriguez 2-10-16
REGISTERED CIVIL ENGINEER DATE

February 22, 2016
PLANS APPROVAL DATE

REGISTERED PROFESSIONAL ENGINEER
SHERI M. RODRIGUEZ
No. C66861
Exp. 9-30-16
CIVIL
STATE OF CALIFORNIA

THE STATE OF CALIFORNIA OR ITS OFFICERS OR AGENTS SHALL NOT BE RESPONSIBLE FOR THE ACCURACY OR COMPLETENESS OF SCANNED COPIES OF THIS PLAN SHEET.

NOTES:

1. CHANNELIZER (SURFACE MOUNTED) TO BE PLACED 10′ C-C.
2. FOR FINAL PAVEMENT DELINEATION SEE LAYOUT AND QUANTITY SHEETS.

LEGEND:

● CHANNELIZER (SURFACE MOUNTED)

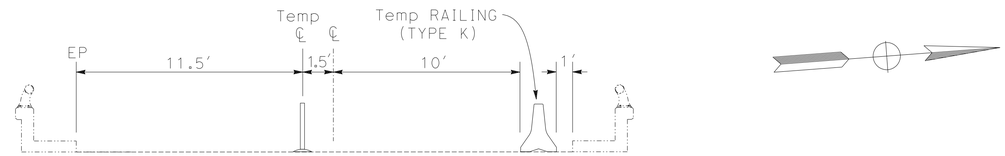

TYPICAL SECTION

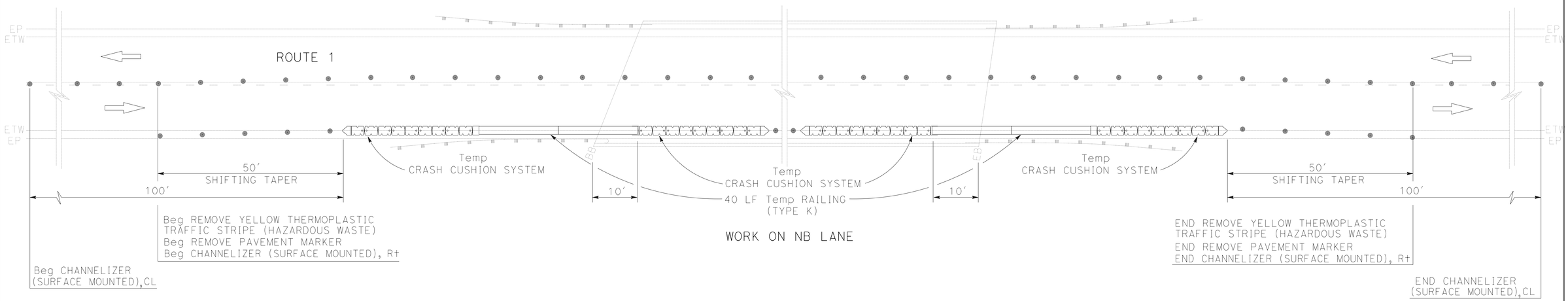

WORK ON NB LANE

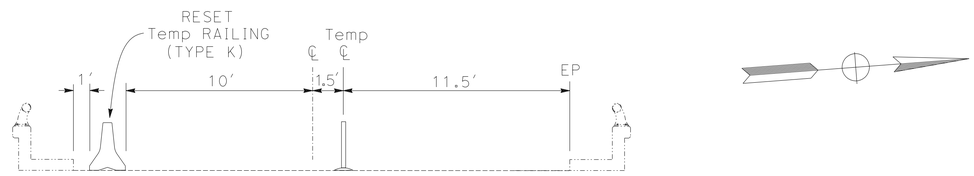

TYPICAL SECTION

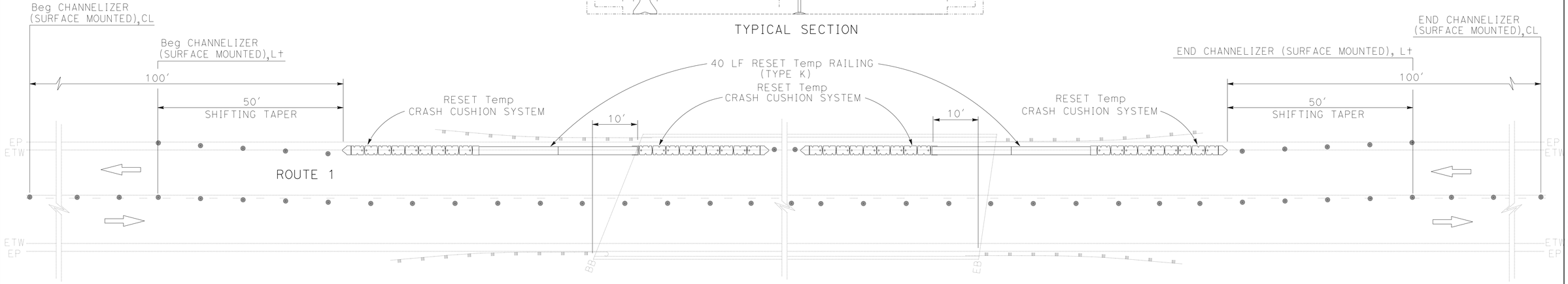

WORK ON SB LANE

BRUSH CREEK BRIDGE
LOCATION 1

APPROVED FOR TRAFFIC HANDLING WORK ONLY

TRAFFIC HANDLING PLAN

NO SCALE

TH-2

REVISED BY | DATE REVISED
SHERI M. RODRIGUEZ | PAUL W. HAILEY
CALCULATED-DESIGNED BY | CHECKED BY
FUNCTIONAL SUPERVISOR | RICHARD MULLEN

STATE OF CALIFORNIA - DEPARTMENT OF TRANSPORTATION
Caltrans® TRAFFIC OPERATIONS

P:\PROJ\01\0e580\drafting\sheets\0114000103md002.dgn

LAST REVISION 00-00-00 | DATE PLOTTED => 25-FEB-2016 | TIME PLOTTED => 07:28

Dist	COUNTY	ROUTE	POST MILES TOTAL PROJECT	SHEET No.	TOTAL SHEETS
01	Men	1,101	Var	10	36

Sheri M. Rodriguez 2-10-16
REGISTERED CIVIL ENGINEER DATE

February 22, 2016
PLANS APPROVAL DATE

REGISTERED PROFESSIONAL ENGINEER
SHERI M. RODRIGUEZ
No. C66861
Exp. 9-30-16
CIVIL
STATE OF CALIFORNIA

THE STATE OF CALIFORNIA OR ITS OFFICERS OR AGENTS SHALL NOT BE RESPONSIBLE FOR THE ACCURACY OR COMPLETENESS OF SCANNED COPIES OF THIS PLAN SHEET.

NOTE:

WHEN DETAIL 19 IS SHOWN, THE SOLID BARRIER SHALL BE PLACED ON THE SIDE DESIGNATED. (R=RIGHT), (L=LEFT)

TEMPORARY PAVEMENT DELINEATION

LOCATION		LENGTH	DETAIL	REMOVE YELLOW THERMOPLASTIC TRAFFIC STRIPE (HAZARDOUS WASTE)	REMOVE PAVEMENT MARKER (N)
FROM	TO	LF		LF	EA
PM 20.81	PM 20.88	360	19L	450	24
(SHOWN ON SHEET Q-1)			TOTAL	450	24

(N) NOT A SEPARATE PAY ITEM. FOR INFORMATION ONLY.

TRAFFIC CONTROL DEVICES

DIRECTION	CHANNELIZER (SURFACE MOUNTED)		Temp RAILING (TYPE K)	Temp CRASH CUSHION SYSTEM	RESET Temp RAILING (TYPE K)	RESET Temp CRASH CUSHION SYSTEM
	YELLOW	WHITE				
	EA		LF	EA	LF	EA
NB	47	14	80	4		
SB	47	14			80	4
SUBTOTAL	94	28	80	4	80	4
TOTAL	122		80	4	80	4

TRAFFIC HANDLING QUANTITIES

THQ-1

REVISED BY | DATE REVISED
SHERI M. RODRIGUEZ | PAUL W. HAILEY
CALCULATED-DESIGNED BY | CHECKED BY
FUNCTIONAL SUPERVISOR
RICHARD MULLEN

STATE OF CALIFORNIA - DEPARTMENT OF TRANSPORTATION
Caltrans® TRAFFIC OPERATIONS

P:\PROJ\01\0e580\drafting\sheets\0114000103mf001.dgn

LAST REVISION 00-00-00 | DATE PLOTTED => 25-FEB-2016 | TIME PLOTTED => 07:28

Dist	COUNTY	ROUTE	POST MILES TOTAL PROJECT	SHEET No.	TOTAL SHEETS
01	Men	1,101	Var	11	36

REGISTERED CIVIL ENGINEER DATE

February 22, 2016
PLANS APPROVAL DATE

REGISTERED PROFESSIONAL ENGINEER
BRENDA HARWELL
No. 64471
Exp. 6-30-17
CIVIL
STATE OF CALIFORNIA

THE STATE OF CALIFORNIA OR ITS OFFICERS OR AGENTS SHALL NOT BE RESPONSIBLE FOR THE ACCURACY OR COMPLETENESS OF SCANNED COPIES OF THIS PLAN SHEET.

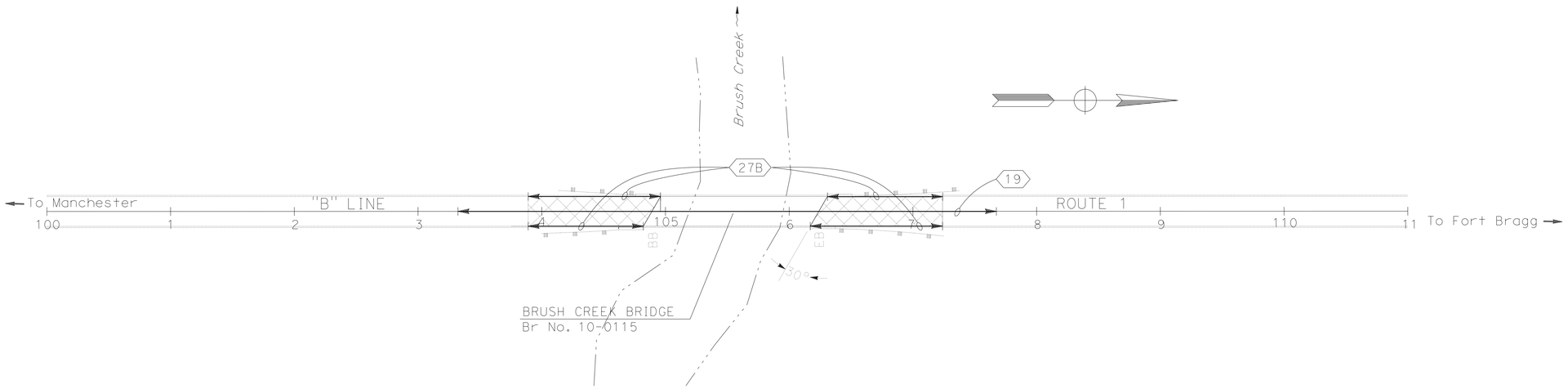

PAVEMENT DELINEATION PLAN

SCALE: 1" = 50'

APPROVED FOR PAVEMENT DELINEATION WORK ONLY

PD-1

REVISED BY	DATE REVISED
BRENDA HARWELL	CHRIS GHIDINELLI

CALCULATED-DESIGNED BY
CHECKED BY

FUNCTIONAL SUPERVISOR
TOM FITZGERALD

STATE OF CALIFORNIA - DEPARTMENT OF TRANSPORTATION
Caltrans® MAINTENANCE DESIGN

P:\PROJ\01\0e580\drafting\sheets\01140001031na001.dgn

LAST REVISION 00-00-00
DATE PLOTTED => 25-FEB-2016
TIME PLOTTED => 07:29

Dist	COUNTY	ROUTE	POST MILES TOTAL PROJECT	SHEET No.	TOTAL SHEETS
01	Men	1,101	Var	12	36

REGISTERED CIVIL ENGINEER DATE

February 22, 2016
PLANS APPROVAL DATE

REGISTERED PROFESSIONAL ENGINEER BRENDA HARWELL No. 64471 Exp. 6-30-17 CIVIL STATE OF CALIFORNIA

THE STATE OF CALIFORNIA OR ITS OFFICERS OR AGENTS SHALL NOT BE RESPONSIBLE FOR THE ACCURACY OR COMPLETENESS OF SCANNED COPIES OF THIS PLAN SHEET.

Temp EROSION CONTROL

LOCATION				Temp FIBER ROLL	REMARKS
No.	Rte	PM		LF	
1	1	20.85	"B" 104+52 TO "B" 104+82	30.0	SOUTH APPROACH, LEFT
			"B" 104+52 TO "B" 104+82	30.0	SOUTH APPROACH, RIGHT
			"B" 106+24 TO "B" 106+54	30.0	NORTH APPROACH, LFET
			"B" 106+24 TO "B" 106+54	30.0	NORTH APPROACH, RIGHT
			TOTAL	120.0	

SIGNS, MARKERS, DELINEATORS AND CHANNELIZERS (SURFACE MOUNTED)

LOCATION			RELOCATE ROADSIDE SIGN TWO-POST	RESET MARKER	GUARD RAILING DELINEATOR	REMOVE CHANNELIZERS	CHANNELIZER (SURFACE MOUNTED) (LEFT IN PLACE)	REMARKS
No.	Rte	PM	EA	EA	EA	EA	EA	
1	1	20.83	1	4	8			SOUTH APPROACH, Rt: L-1(CA), TYPE P(CA), G11-6 / Lt: TYPE P(CA), G11-6 / G9-5(CA) "MANCHESTER"
		20.85		4	8			NORTH APPROACH, Rt: TYPE P(CA) / Lt: L-1(CA), TYPE P(CA), G11-6
3	101	4.95 TO 4.99				15	15	REPLACE Exist CHANNELIZERS
		TOTAL	1	8	16	15	15	

METAL BEAM GUARDRAIL QUANTITIES

LOCATION			MIDWEST GUARDRAIL SYSTEM	REMOVE GUARDRAIL	ALTERNATIVE FLARED TERMINAL SYSTEM	TRANSITION RAILING (TYPE WB-31)	TREATED WOOD WASTE	VEGETATION CONTROL (MINOR CONCRETE)	REMARKS
No.	Rte	PM	LF	LF	EA	EA	LB	SQYD	
1	1	20.83		126	2	2	3208	92.5	SOUTH APPROACH
		20.85	12.5	126	2	2	3608	105.5	NORTH APPROACH
		TOTAL	12.5	252	4	4	6816	198	

ROADWAY QUANTITIES

LOCATION			WIDTH	Max LENGTH	COLD PLANE AC PAVEMENT	HMA (TYPE A)	REMARKS
No.	Rte	PM	LF	LF	SQYD	TON	
1	1	20.83	26	100	270	37.5	SOUTH APPROACH
		20.85	26	100	270	37.5	NORTH APPROACH
				TOTAL	540	75.0	

THERMOPLASTIC TRAFFIC STRIPE AND PAVEMENT MARKERS

LOCATION				BRIDGE LENGTH	DETAIL NUMBER	DETAIL LENGTH	THERMOPLASTIC TRAFFIC STRIPE						PAVEMENT MARKERS					REMARKS
							REMOVE						REMOVE (N)		(RETROREFLECTIVE)			
							YELLOW (HAZARDOUS WASTE)	WHITE	4" SOLID YELLOW	4" SOLID WHITE	4" (BROKEN 36-12) WHITE	4" (BROKEN 36-12) YELLOW	TYPE D	TYPE G	TYPE D	TYPE G	TYPE H	
No.	Rte	PM FROM	PM TO	(N)		(N)												
						LF	LF	LF	LF	LF	LF	LF	EA	EA	EA	EA	EA	
1	1	20.82	20.85	135'	27B	345				345								
					19L	360	450 *		360			360	8 *	16 *	8		16	
					27B	345				345								
3	101	4.95	4.99	520'	27B	530		530		530								
					12	530		177			530			13		13		
					29	530	2120		2120				47		47			
					27B	530		530		530								
					SUBTOTAL		2570	1237	2565	1750	530	360	55	29	55	13	16	
					TOTAL		2570	1237	4315		890		84		84			

(N) NOT A separate PAY ITEM. FOR INFORMATION ONLY.

* QUANTITY FROM SHEET THQ-1 "REMOVE YELLOW THERMOPLASTIC TRAFFIC STRIPE (HAZARDOUS WASTE)"

SUMMARY OF QUANTITIES

Q-1

REVISED BY | DATE REVISED
BRENDA HARWELL | CHRIS GHIDINELLI
CALCULATED-DESIGNED BY | CHECKED BY
FUNCTIONAL SUPERVISOR: TOM FITZGERALD

STATE OF CALIFORNIA - DEPARTMENT OF TRANSPORTATION
Caltrans® MAINTENANCE DESIGN

P:\PROJ\01\0e580\drafting\sheets\0114000103pa001.dgn

LAST REVISION 00-00-00 | DATE PLOTTED => 25-FEB-2016 | TIME PLOTTED => 07:29

M

Maint	MAINTENANCE
Max	MAXIMUM
MB	METAL BEAM
MBB	METAL BEAM BARRIER
MBGR	METAL BEAM GUARD RAILING
Med	MEDIAN
MGS	MIDWEST GUARDRAIL SYSTEM
MH	MANHOLE
Min	MINIMUM
Misc	MISCELLANEOUS
Misc I & S	MISCELLANEOUS IRON AND STEEL
Mkr	MARKER
Mod	MODIFIED,
	MODIFY
Mon	MONUMENT
MP	METAL PLATE
MPGR	METAL PLATE GUARD RAILING
MR	MOVEMENT RATING
MSE	MECHANICALLY STABILIZED EMBANKMENT
Mt	MOUNTAIN, MOUNT
Mtl	MATERIAL
MVP	MAINTENANCE VEHICLE PULLOUT

N

N	NORTH
NB	NORTHBOUND
No.	NUMBER (MUST HAVE PERIOD)
Nos.	NUMBERS (MUST HAVE PERIOD)
NPS	NOMINAL PIPE SIZE
NS	NEAR SIDE
NSP	NEW STANDARD PLAN
NTS	NOT TO SCALE

O

Oblr	OBLITERATE
OC	OVERCROSSING
OD	OUTSIDE DIAMETER
OF	OUTSIDE FACE
OG	ORIGINAL GROUND
OGAC	OPEN GRADED ASPHALT CONCRETE
OGFC	OPEN GRADED FRICTION COURSE
OH	OVERHEAD
OHWM	ORDINARY HIGH WATER MARK
O-O	OUT TO OUT
Opp	OPPOSITE
OSD	OVERSIDE DRAIN

P

p	PAGE
PAP	PERFORATED ALUMINUM PIPE
PB	PULL BOX
PC	POINT OF CURVATURE,
	PRECAST
PCC	POINT OF COMPOUND CURVE,
	PORTLAND CEMENT CONCRETE
PCMS	PORTABLE CHANGEABLE MESSAGE SIGN
PCP	PERFORATED CONCRETE PIPE,
	PRESTRESSED CONCRETE PIPE
PCVC	POINT OF COMPOUND VERTICAL CURVE
PEC	PERMIT TO ENTER AND CONSTRUCT
Ped	PEDESTRIAN
Ped OC	PEDESTRIAN OVERCROSSING
Ped UC	PEDESTRIAN UNDERCROSSING
Perm Mtl	PERMEABLE MATERIAL

P continued

PG	PROFILE GRADE
PI	POINT OF INTERSECTION
PJP	PARTIAL JOINT PENETRATION
Pkwy	PARKWAY
ℙL,PL	PLATE
P/L	PROPERTY LINE
PM	POST MILE,
	TIME FROM NOON TO MIDNIGHT
PN	PAVING NOTCH
POC	POINT OF HORIZONTAL CURVE
POT	POINT OF TANGENT
POVC	POINT OF VERTICAL CURVE
PP	PIPE PILE,
	PLASTIC PIPE,
	POWER POLE
PPL	PREFORMED PERMEABLE LINER
PPP	PERFORATED PLASTIC PIPE
PRC	POINT OF REVERSE CURVE
PRF	PAVEMENT REINFORCING FABRIC
PRVC	POINT OF REVERSE VERTICAL CURVE
PS&E	PLANS, SPECIFICATIONS AND ESTIMATES
PS, P/S	PRESTRESSED
PSP	PERFORATED STEEL PIPE
PT	POINT OF TANGENCY
PVC	POLYVINYL CHLORIDE
Pvmt	PAVEMENT

Q

Qty	QUANTITY

R

R	RADIUS
R & D	REMOVE AND DISPOSE
R & S	REMOVE AND SALVAGE
R/C	RATE OF CHANGE
RCA	REINFORCED CONCRETE ARCH
RCB	REINFORCED CONCRETE BOX
RCP	REINFORCED CONCRETE PIPE
RCPA	REINFORCED CONCRETE PIPE ARCH
Rd	ROAD
Reinf	REINFORCED,
	REINFORCEMENT,
	REINFORCING
Rel	RELOCATE
Repl	REPLACEMENT
Ret	RETAINING
Rev	REVISED, REVISION
Rdwy	ROADWAY
RHMA	RUBBERIZED HOT MIX ASPHALT
Riv	RIVER
RM	ROAD-MIXED
RP	RADIUS POINT,
	REFERENCE POINT
RR	RAILROAD
RSP	ROCK SLOPE PROTECTION,
	REVISED STANDARD PLAN
Rt	RIGHT
Rte	ROUTE
RW	REDWOOD,
	RETAINING WALL
R/W	RIGHT OF WAY
Rwy	RAILWAY

S

S	SOUTH,
	SUPPLEMENT
SAE	STRUCTURE APPROACH EMBANKMENT
Salv	SALVAGE
SAPP	STRUCTURAL ALUMINUM PLATE PIPE
SB	SOUTHBOUND
SC	SAND CUSHION
SCSP	SLOTTED CORRUGATED STEEL PIPE
SD	STORM DRAIN
Sec	SECOND,
	SECTION
Sep	SEPARATION
SG	SUBGRADE
Shld	SHOULDER
Sht	SHEET
Sim	SIMILAR
℄	STATION LINE
SM	SELECTED MATERIAL
Spec	SPECIAL,
	SPECIFICATIONS
SPP	SLOTTED PLASTIC PIPE
SS	SLOPE STAKE
SSBM	STRAP AND SADDLE BRACKET METHOD
SSD	STRUCTURAL SECTION DRAIN
SSPA	STRUCTURAL STEEL PLATE ARCH
SSPP	STRUCTURAL STEEL PLATE PIPE
SSPPA	STRUCTURAL STEEL PLATE PIPE ARCH
SSRP	STEEL SPIRAL RIB PIPE
St	STREET
Sta	STATION
STBB	SINGLE THRIE BEAM BARRIER
Std	STANDARD
Str	STRUCTURE
Surf	SURFACING
SW	SIDEWALK,
	SOUND WALL
Swr	SEWER
Sym	SYMMETRICAL
S4S	SURFACE 4 SIDES

T

T	SEMI-TANGENT
Tan	TANGENT
TBB	THRIE BEAM BARRIER
Tbr	TIMBER
TC	TOP OF CURB
TCB	TRAFFIC CONTROL BOX
TCE	TEMPORARY CONSTRUCTION EASEMENT
Tel	TELEPHONE
Temp	TEMPORARY
TG	TOP OF GRADE
Tot	TOTAL
TP	TELEPHONE POLE
TPB	TREATED PERMEABLE BASE
TPM	TREATED PERMEABLE MATERIAL
Trans	TRANSITION

T continued

TS	TRANSVERSE,
	TRAFFIC SIGNAL,
	TUBULAR STEEL
Typ	TYPICAL

U

UC	UNDERCROSSING
UD	UNDERDRAIN
UG	UNDERGROUND
UON	UNLESS OTHERWISE NOTED
UP	UNDERPASS

V

V	VALVE,
	DESIGN SPEED
Var	VARIABLE,
	VARIES
VC	VERTICAL CURVE
VCP	VITRIFIED CLAY PIPE
Vert	VERTICAL
Via	VIADUCT
Vol	VOLUME

W

W	WEST,
	WIDTH
WB	WESTBOUND
WH	WEEP HOLE
WM	WIRE MESH
WS	WATER SURFACE
WSP	WELDED STEEL PIPE
Wt	WEIGHT
WV	WATER VALVE
WW	WINGWALL
WWLOL	WINGWALL LAYOUT LINE

X

X Sec	CROSS SECTION
Xing	CROSSING

Y

Yr	YEAR
Yrs	YEARS

Dist	COUNTY	ROUTE	POST MILES TOTAL PROJECT	SHEET No.	TOTAL SHEETS
01	Men	1,101	Var	13	36

Grace M. Tsushima
REGISTERED CIVIL ENGINEER

July 19, 2013
PLANS APPROVAL DATE

REGISTERED PROFESSIONAL ENGINEER Grace M. Tsushima No. C49814 Exp. 9-30-14 CIVIL STATE OF CALIFORNIA

THE STATE OF CALIFORNIA OR ITS OFFICERS OR AGENTS SHALL NOT BE RESPONSIBLE FOR THE ACCURACY OR COMPLETENESS OF SCANNED COPIES OF THIS PLAN SHEET.

TO ACCOMPANY PLANS DATED 2-22-16

UNIT OF MEASUREMENT SYMBOLS:

Some of the symbols used in the project plan quantity tables and in the Bid Item List are:

TABLE A

SYMBOL USED	DEFINITIONS
ACRE	ACRE
CF	CUBIC FOOT
CY	CUBIC YARD
EA	EACH
GAL	GALLON
LB	POUND
LF	LINEAR FOOT
SQFT	SQUARE FOOT
SQYD	SQUARE YARD
STA	100 FEET
TAB	TABLET
TON	2,000 POUNDS

Some of the symbols used in the plans other than in the project plan quantity tables are:

TABLE B

SYMBOL USED	DEFINITIONS
ksi	KIPS PER SQUARE INCH
ksf	KIPS PER SQUARE FOOT
psi	POUNDS PER SQUARE INCH
psf	POUNDS PER SQUARE FOOT
lb/ft^3, pcf	POUNDS PER CUBIC FOOT
tsf	TONS PER SQUARE FOOT
mph, MPH *	MILES PER HOUR
ø	NOMINAL DIAMETER
oz	OUNCE
lb	POUND
kip	1,000 POUNDS
cal	CALORIE
ft	FOOT OR FEET
gal	GALLON

* For use on a sign panel only

STATE OF CALIFORNIA
DEPARTMENT OF TRANSPORTATION

ABBREVIATIONS (SHEET 2 OF 2)

NO SCALE

RSP A10B DATED JULY 19, 2013 SUPERSEDES STANDARD PLAN A10B DATED MAY 20, 2011 - PAGE 2 OF THE STANDARD PLANS BOOK DATED 2010.

REVISED STANDARD PLAN RSP A10B

2010 REVISED STANDARD PLAN RSP A10B

P:\PROJ\01\0e580\drafting\sheets\va001.dgn

6-7-13

Dist	COUNTY	ROUTE	POST MILES TOTAL PROJECT	SHEET No.	TOTAL SHEETS
01	Men	1,101	Var	14	36

Randell D. Hiatt
REGISTERED CIVIL ENGINEER

July 19, 2013
PLANS APPROVAL DATE

REGISTERED PROFESSIONAL ENGINEER
Randell D. Hiatt
No. C50200
Exp. 6-30-15
CIVIL
STATE OF CALIFORNIA

THE STATE OF CALIFORNIA OR ITS OFFICERS OR AGENTS SHALL NOT BE RESPONSIBLE FOR THE ACCURACY OR COMPLETENESS OF SCANNED COPIES OF THIS PLAN SHEET.

TO ACCOMPANY PLANS DATED 2-22-16

2010 REVISED STANDARD PLAN RSP A77L1

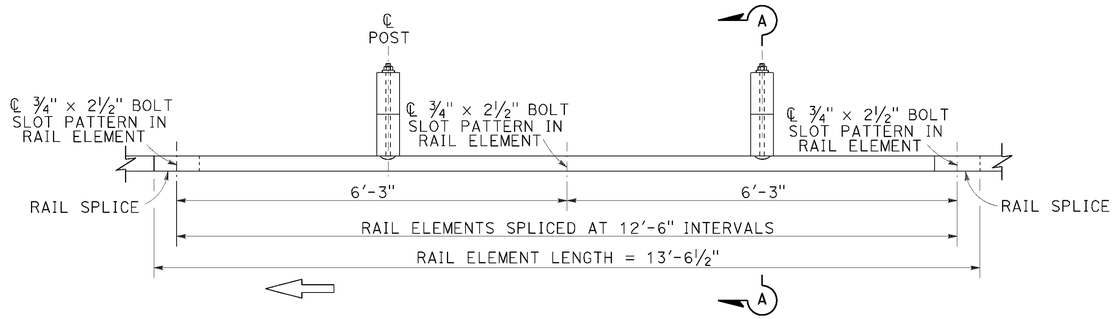

PLAN

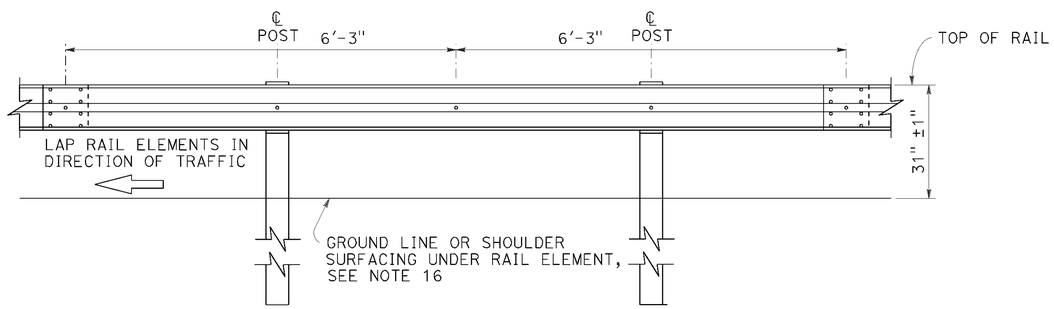

ELEVATION

MIDWEST GUARDRAIL SYSTEM WITH WOOD POST AND BLOCKS

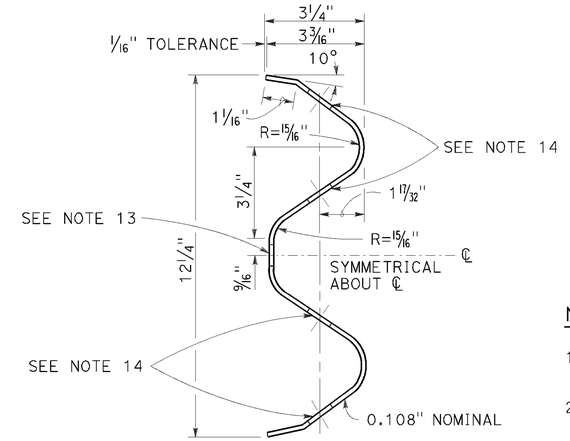

SECTION THRU RAIL ELEMENT

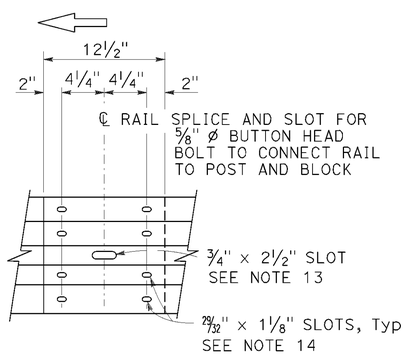

ELEVATION

RAIL ELEMENT SPLICE DETAIL

a) Connect the over lapped end of the rail elements with ⅝" ø × 1⅜" button head oval shoulder splice bolts inserted into the 29/32" × 1⅛" slots and bolted together with ⅝" ø recessed hex nuts. Recess of hex nut points toward rail element. A total of 8 bolts and nuts are to be used at each rail splice connection.

b) The ends of the rail elements are to be overlapped in the direction of traffic (see details).

c) Where end cap is to be attached to the end of a rail element, a total of 4 of the above described splice bolts and nuts are to be used.

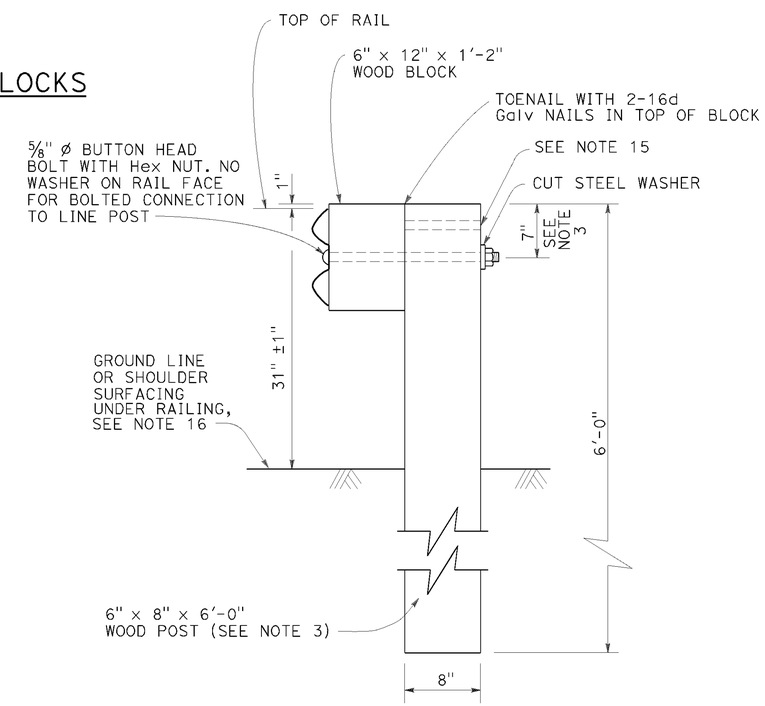

SECTION A-A

TYPICAL WOOD LINE POST INSTALLATION

See Note 4

NOTES:

1. For details of steel post installations, see Revised Standard Plan RSP A77L2.
2. For details of standard hardware used to construct MGS, see Revised Standard Plan RSP A77M1.
3. For details of wood posts and wood blocks used to construct MGS, see Revised Standard Plan RSP A77N1.
4. For additional installation details, see Revised Standard Plan RSP A77N3.
5. MGS post spacing to be 6'-3" center to center, except as otherwise noted.
6. For MGS typical layouts, see the A77P, A77Q and A77R Series of Standard Plans.
7. If railing is connected to terminal system end treatment, use 31" height terminal system end treatment.
8. For MGS end anchor details, see Revised Standard Plans RSP A77S1 and RSP A77T2.
9. For details of MGS transition to bridge railing, see Revised Standard Plan RSP A77U4.
10. For additional details of MSG connection to bridge railing, see Revised Standard Plans RSP A77U1, RSP A77U2 and RSP A77V1.
11. For MGS connection details to abutments and walls, see Revised Standard Plan RSP A77U3.
12. For typical MGS delineation and dike positioning details, see Revised Standard Plan RSP A77N4.
13. Slotted hole for bolted connection of rail element to block and post. See "Section Thru Rail Element".
14. Slotted holes for splice bolts to overlap ends of rail element. See "Section Thru Rail Element".
15. Additional hole in uppermost portion of line post is for potential future adjustments of railing height. See Revised Standard Plan RSP A77N1.
16. Install posts in soil.

STATE OF CALIFORNIA
DEPARTMENT OF TRANSPORTATION

MIDWEST GUARDRAIL SYSTEM STANDARD RAILING SECTION (WOOD POST WITH WOOD BLOCK)

NO SCALE

RSP A77L1 DATED JULY 19, 2013 SUPPLEMENTS STANDARD PLANS BOOK DATED 2010.

REVISED STANDARD PLAN RSP A77L1

P:\PROJ\01\0e580\drafting\sheets\va002.dgn

7-3-13

Dist	COUNTY	ROUTE	POST MILES TOTAL PROJECT	SHEET No.	TOTAL SHEETS
01	Men	1,101	Var	15	36

Randell D. Hiatt
REGISTERED CIVIL ENGINEER

July 19, 2013
PLANS APPROVAL DATE

REGISTERED PROFESSIONAL ENGINEER
Randell D. Hiatt
No. C50200
Exp. 6-30-15
CIVIL
STATE OF CALIFORNIA

THE STATE OF CALIFORNIA OR ITS OFFICERS OR AGENTS SHALL NOT BE RESPONSIBLE FOR THE ACCURACY OR COMPLETENESS OF SCANNED COPIES OF THIS PLAN SHEET.

TO ACCOMPANY PLANS DATED 2-22-16

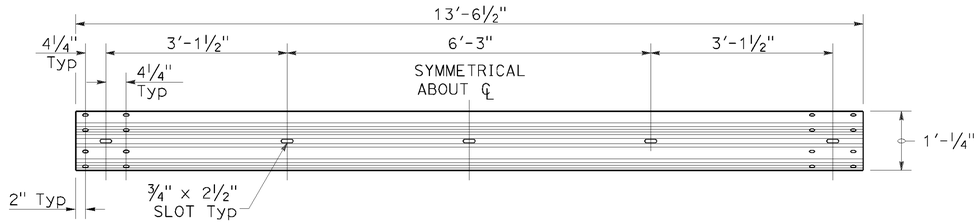

TYPICAL RAIL ELEMENT

NOTE:

1. Slotted holes for splice bolts to overlap ends of rail element.

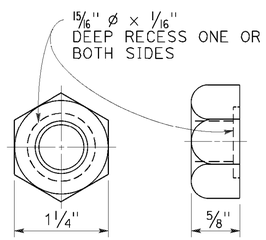

⅝" ø RECESS NUT

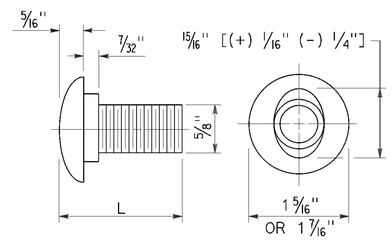

⅝" ø BUTTON HEAD BOLT

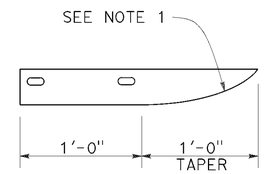

PLAN

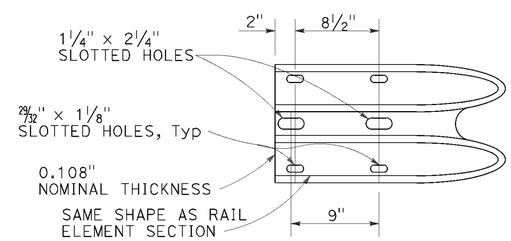

ELEVATION

END CAP

(TYPE A)

BUTTON HEAD BOLT

L	THREAD LENGTH
1⅜"	FULL THREAD LENGTH
2"	FULL THREAD LENGTH
10"	4" Min THREAD LENGTH
18"	4" Min THREAD LENGTH
20"	4" Min THREAD LENGTH
22"	4" Min THREAD LENGTH
26"	4" Min THREAD LENGTH
36"	4" Min THREAD LENGTH
** 2¾"	2" Min THREAD LENGTH
** 19"	4" Min THREAD LENGTH

** For nested rail applications.

STATE OF CALIFORNIA
DEPARTMENT OF TRANSPORTATION

MIDWEST GUARDRAIL SYSTEM STANDARD HARDWARE

NO SCALE

RSP A77M1 DATED JULY 19, 2013 SUPPLEMENTS THE STANDARD PLANS BOOK DATED 2010.

REVISED STANDARD PLAN RSP A77M1

2010 REVISED STANDARD PLAN RSP A77M1

P:\PROJ\01\0e580\drafting\sheets\va003.dgn

7-3-13

Dist	COUNTY	ROUTE	POST MILES TOTAL PROJECT	SHEET No.	TOTAL SHEETS
01	Men	1,101	Var	16	36

Randell D. Hiatt
REGISTERED CIVIL ENGINEER

July 19, 2013
PLANS APPROVAL DATE

REGISTERED PROFESSIONAL ENGINEER
Randell D. Hiatt
No. C50200
Exp. 6-30-15
CIVIL
STATE OF CALIFORNIA

THE STATE OF CALIFORNIA OR ITS OFFICERS OR AGENTS SHALL NOT BE RESPONSIBLE FOR THE ACCURACY OR COMPLETENESS OF SCANNED COPIES OF THIS PLAN SHEET.

TO ACCOMPANY PLANS DATED 2-22-16

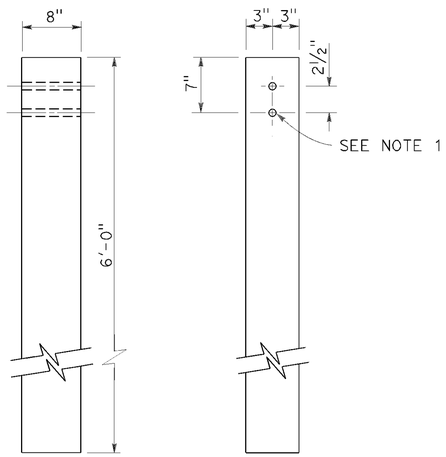

SIDE FRONT

6" x 8" WOOD POST
See Note 3

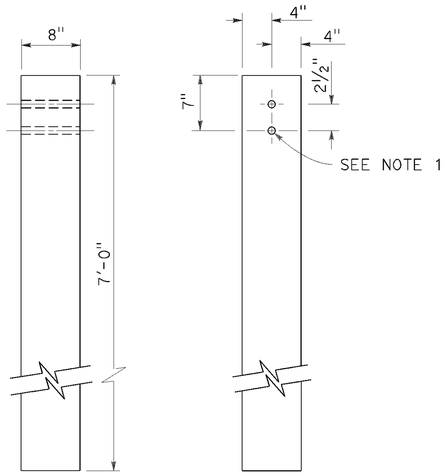

SIDE FRONT

8" x 8" WOOD POST
See Note 4

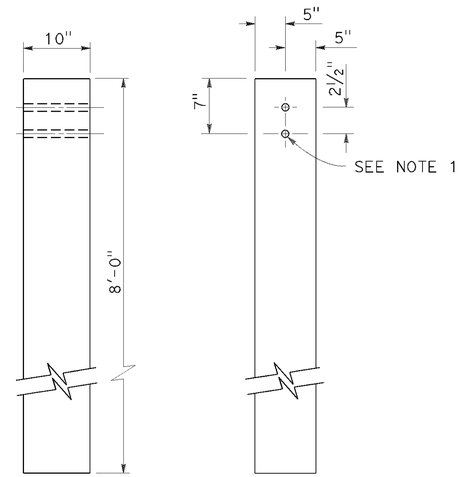

SIDE FRONT

10" x 10" WOOD POST
See Note 5

NOTES:

1. All holes in wood posts and blocks shall be 3/4" Dia ± 1/16".
2. Dimensions shown for wood post are nominal.
3. This post and block combination used for standard line post sections of MGS.
4. This post and 8" x 12" block combination used for line post sections of MGS on narrow roadways.
5. This post and 8" x 12" block combination is typically used where strengthened line post sections of MGS are warranted to shield fixed objects.
6. See Revised Standard Plan RSP A77L3 for use of 6" x 8" and 8" x 8" wood blocks.

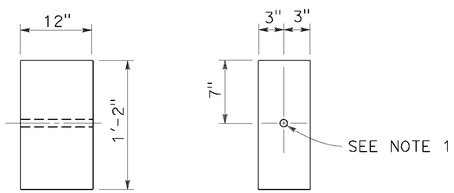

SIDE FRONT

6" x 12" WOOD BLOCK
See Note 3

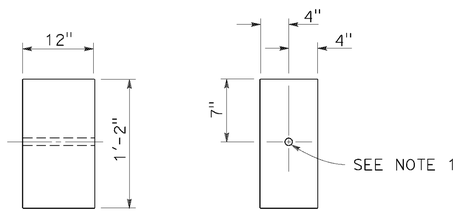

SIDE FRONT

8" x 12" WOOD BLOCK

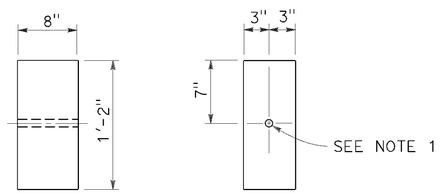

SIDE FRONT

6" x 8" WOOD BLOCK
Only for use with metal beam guard rail see Note 6

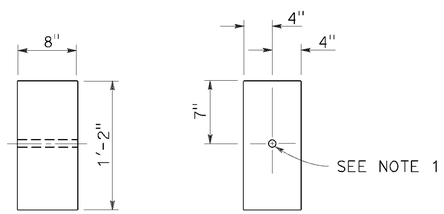

SIDE FRONT

8" x 8" WOOD BLOCK
Only for use with metal beam guard rail see Note 6

STATE OF CALIFORNIA
DEPARTMENT OF TRANSPORTATION

MIDWEST GUARDRAIL SYSTEM WOOD POST AND WOOD BLOCK DETAILS

NO SCALE

RSP A77N1 DATED JULY 19, 2013 SUPPLEMENTS THE STANDARD PLANS BOOK DATED 2010.

REVISED STANDARD PLAN RSP A77N1

2010 REVISED STANDARD PLAN RSP A77N1

P:\PROJ\01\0e580\drafting\sheets\va004.dgn

7-3-13

Dist	COUNTY	ROUTE	POST MILES TOTAL PROJECT	SHEET No.	TOTAL SHEETS
01	Men	1,101	Var	17	36

Randell D. Hiatt
REGISTERED CIVIL ENGINEER

November 15, 2013
PLANS APPROVAL DATE

REGISTERED PROFESSIONAL ENGINEER
Randell D. Hiatt
No. C50200
Exp. 6-30-15
CIVIL
STATE OF CALIFORNIA

THE STATE OF CALIFORNIA OR ITS OFFICERS OR AGENTS SHALL NOT BE RESPONSIBLE FOR THE ACCURACY OR COMPLETENESS OF SCANNED COPIES OF THIS PLAN SHEET.

TO ACCOMPANY PLANS DATED 2-22-16

2010 REVISED STANDARD PLAN RSP A77N3

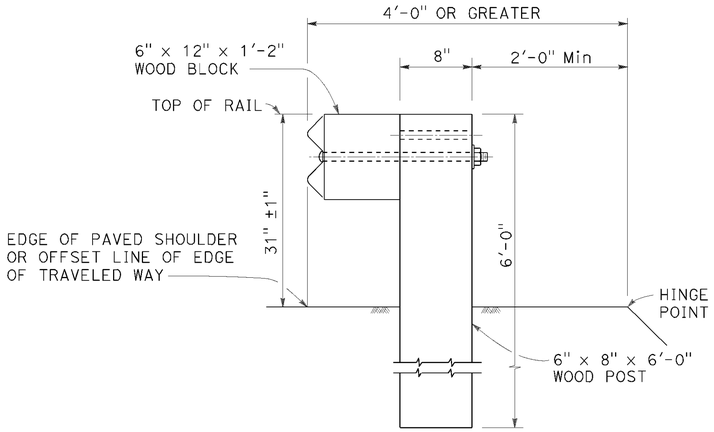

DETAIL A

TYPICAL ROADWAY INSTALLATION

See Note 1

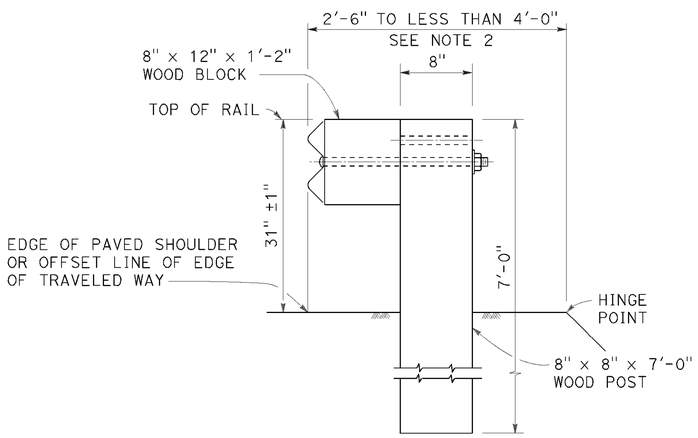

DETAIL B

NARROW ROADWAY INSTALLATION

See Note 1

POST EMBEDMENT

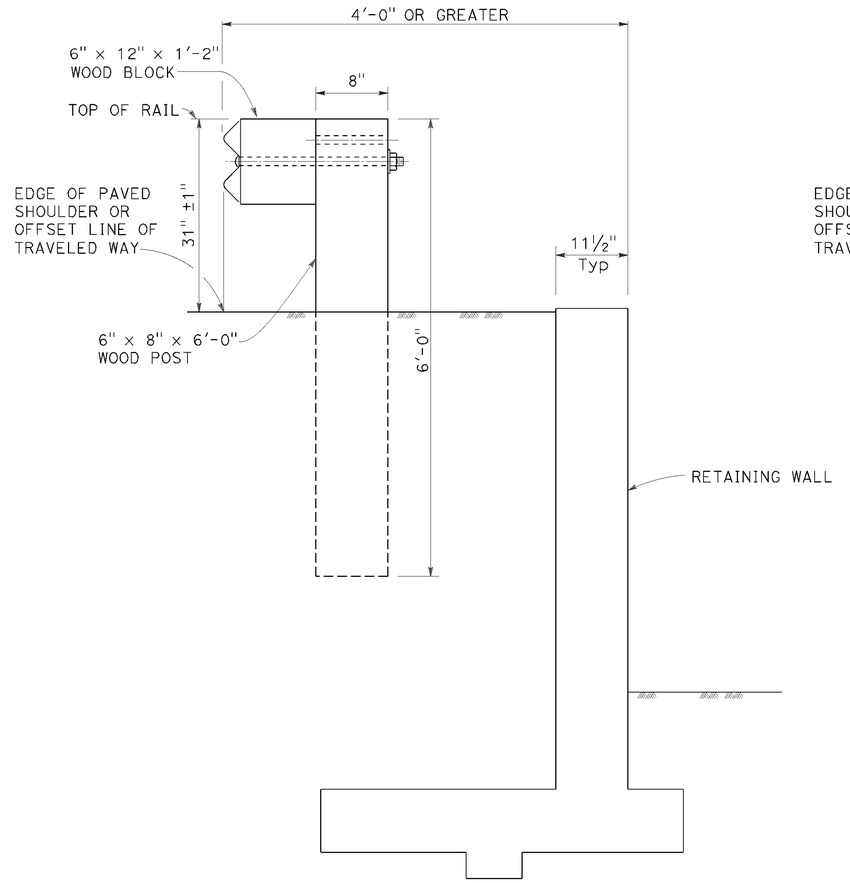

DETAIL C

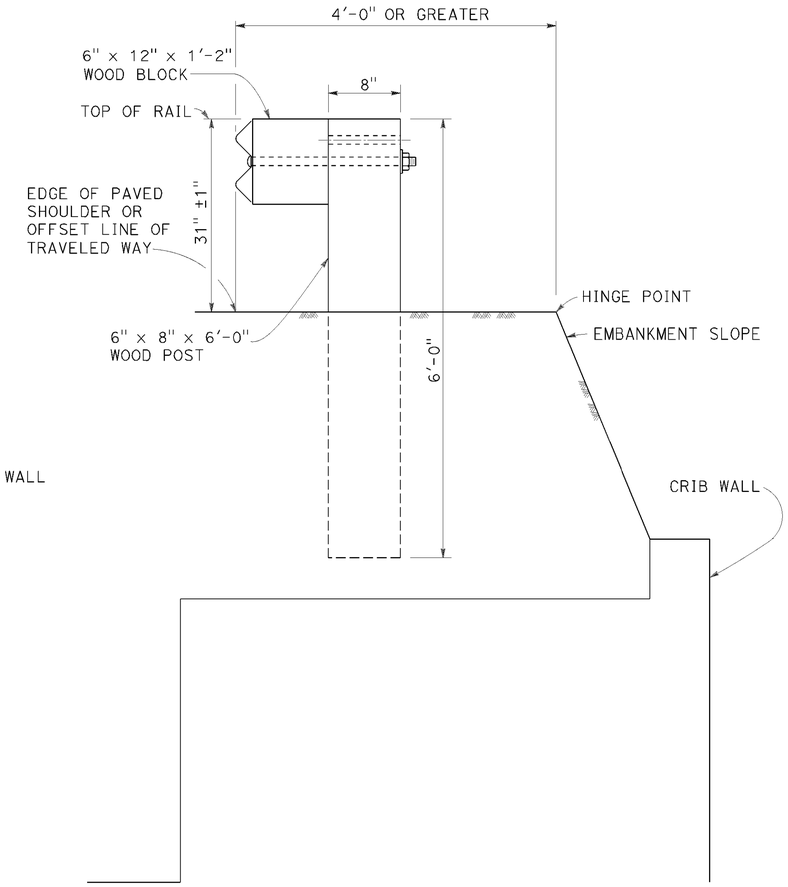

DETAIL D

INSTALLATION AT EARTH RETAINING WALLS

NOTES:

1. These installation details also applicable to steel line post installations. For Detail A, C, and D, where steel line post installations are constructed, W6 x 8.5 or W6 x 9 steel post, 6'-0" in length, with 6" x 12" x 1'-2" notched wood blocks or notched recycled plastic blocks are to be used in place of the size of wood post and wood block shown. For Detail B, where steel line post installations are constructed, W6 x 15 steel post, 8'-0" in length, with 8" x 12" x 1'-2" notched wood blocks or notched recycled plastic blocks are to be used in place of the size of wood post and wood block shown. For additional installation details, see Revised Standard Plan RSP A77L1 and RSP A77L2.
2. Where the distance between the face of the rail and the hinge point is less than 2'-6", see the Project Plans for special details.
3. For dike positioning with MGS installations, see Revised Standard Plan RSP A77N4.

STATE OF CALIFORNIA
DEPARTMENT OF TRANSPORTATION

MIDWEST GUARDRAIL SYSTEM TYPICAL LINE POST EMBEDMENT AND HINGE POINT OFFSET DETAILS

NO SCALE

RSP A77N3 DATED NOVEMBER 15, 2013 SUPERSEDES RSP A77N3 DATED JULY 19, 2013 THAT SUPPLEMENTS THE STANDARD PLANS BOOK DATED 2010.

REVISED STANDARD PLAN RSP A77N3

P:\PROJ\01\0e580\drafting\sheets\va005.dgn

10-29-13

Dist	COUNTY	ROUTE	POST MILES TOTAL PROJECT	SHEET No.	TOTAL SHEETS
01	Men	1,101	Var	18	36

Randell D. Hiatt
REGISTERED CIVIL ENGINEER

July 19, 2013
PLANS APPROVAL DATE

REGISTERED PROFESSIONAL ENGINEER
Randell D. Hiatt
No. C50200
Exp. 6-30-15
CIVIL
STATE OF CALIFORNIA

THE STATE OF CALIFORNIA OR ITS OFFICERS OR AGENTS SHALL NOT BE RESPONSIBLE FOR THE ACCURACY OR COMPLETENESS OF SCANNED COPIES OF THIS PLAN SHEET.

TO ACCOMPANY PLANS DATED 2-22-16

NOTES:

1. When necessary to place dike more than 7" in front of face of MGS, only Type C dike may be used. For dike details, see Revised Standard Plan RSP A87B.
2. For standard railing post embedment, see Revised Standard Plan RSP A77N3.
3. MGS delineation to be used where shown on the Project Plans.
4. When dike or curb is placed under MGS, the maximum height of the dike or curb shall be 6". Mountable dike should not be used. For dike and curb details, see Revised Standard Plans RSP A87A and RSP A87B.
5. For details of typical distance between the face of rail and hinge point, see Revised Standard Plan RSP A77N3.
6. For steel line posts, use 1/4 - 20 self-tapping screws in 0.22" diameter holes or 1/4" bolts in 9/32" diameter holes.

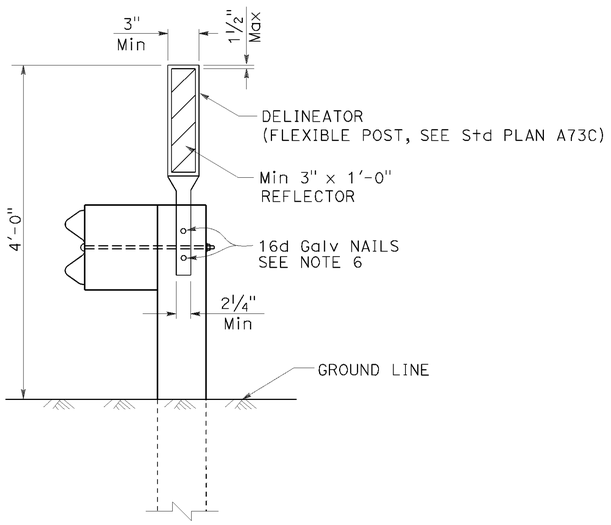

MGS DELINEATION

See Note 3

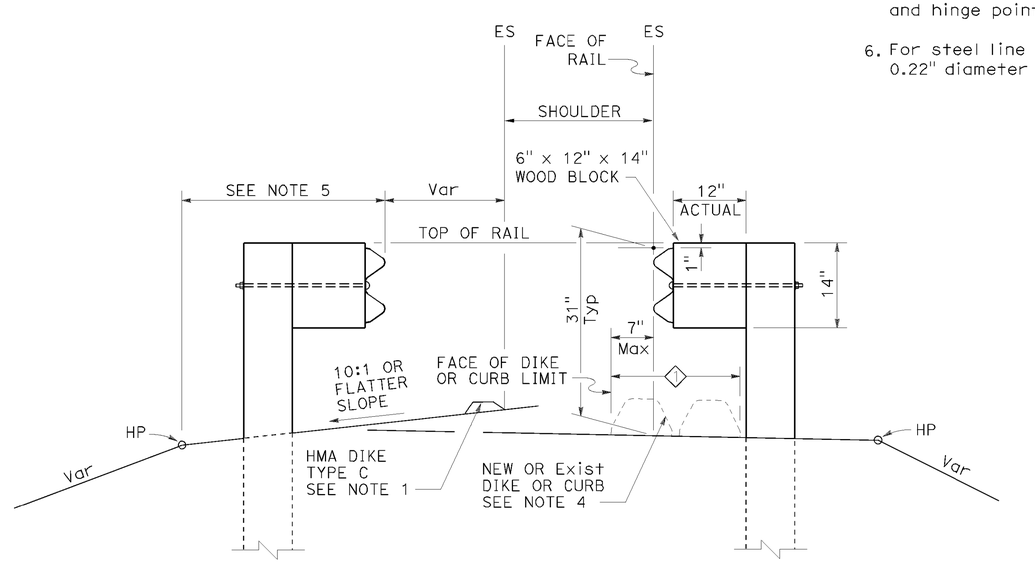

DIKE POSITIONING

See Note 1

1 PERMISSIBLE DIKE OR CURB PLACEMENT AREA

STATE OF CALIFORNIA
DEPARTMENT OF TRANSPORTATION

MIDWEST GUARDRAIL SYSTEM TYPICAL RAILING DELINEATION AND DIKE POSITIONING DETAILS

NO SCALE

RSP A77N4 DATED JULY 19, 2013 SUPPLEMENTS THE STANDARD PLANS BOOK DATED 2010.

REVISED STANDARD PLAN RSP A77N4

2010 REVISED STANDARD PLAN RSP A77N4

P:\PROJ\01\0e580\drafting\sheets\va006.dgn

7-10-13

Dist	COUNTY	ROUTE	POST MILES TOTAL PROJECT	SHEET No.	TOTAL SHEETS
01	Men	1,101	Var	19	36

Randell D. Hiatt
REGISTERED CIVIL ENGINEER

July 19, 2013
PLANS APPROVAL DATE

REGISTERED PROFESSIONAL ENGINEER
Randell D. Hiatt
No. C50200
Exp. 6-30-15
CIVIL
STATE OF CALIFORNIA

THE STATE OF CALIFORNIA OR ITS OFFICERS OR AGENTS SHALL NOT BE RESPONSIBLE FOR THE ACCURACY OR COMPLETENESS OF SCANNED COPIES OF THIS PLAN SHEET.

TO ACCOMPANY PLANS DATED 2-22-16

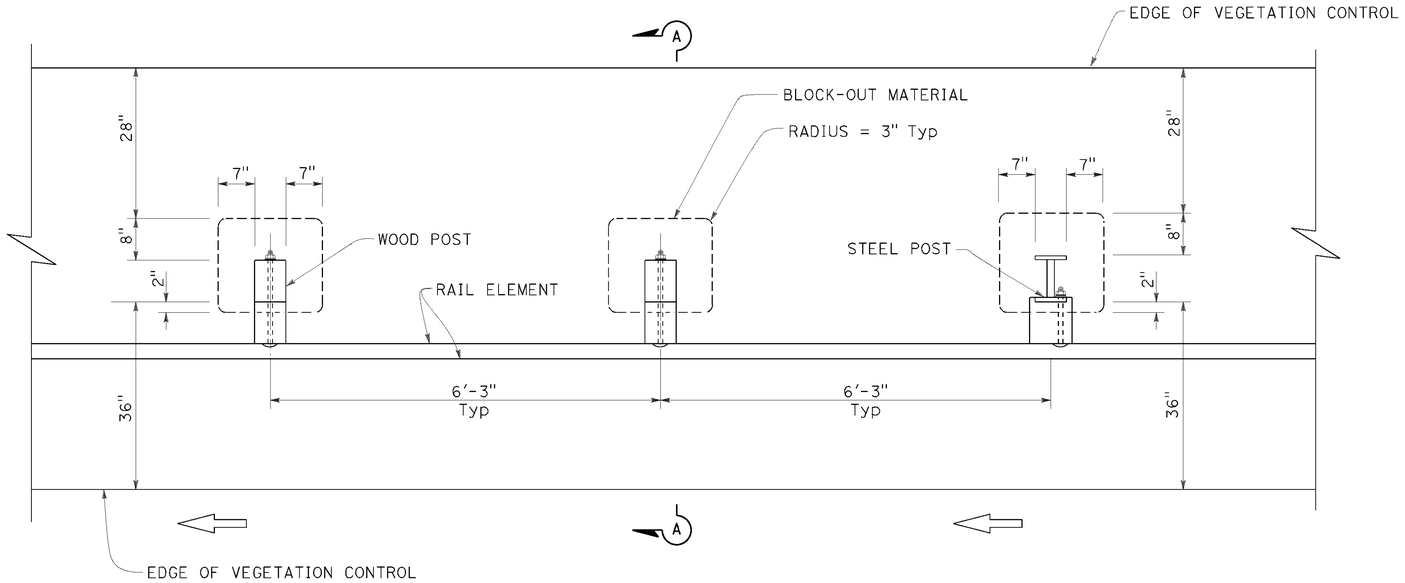

PLAN

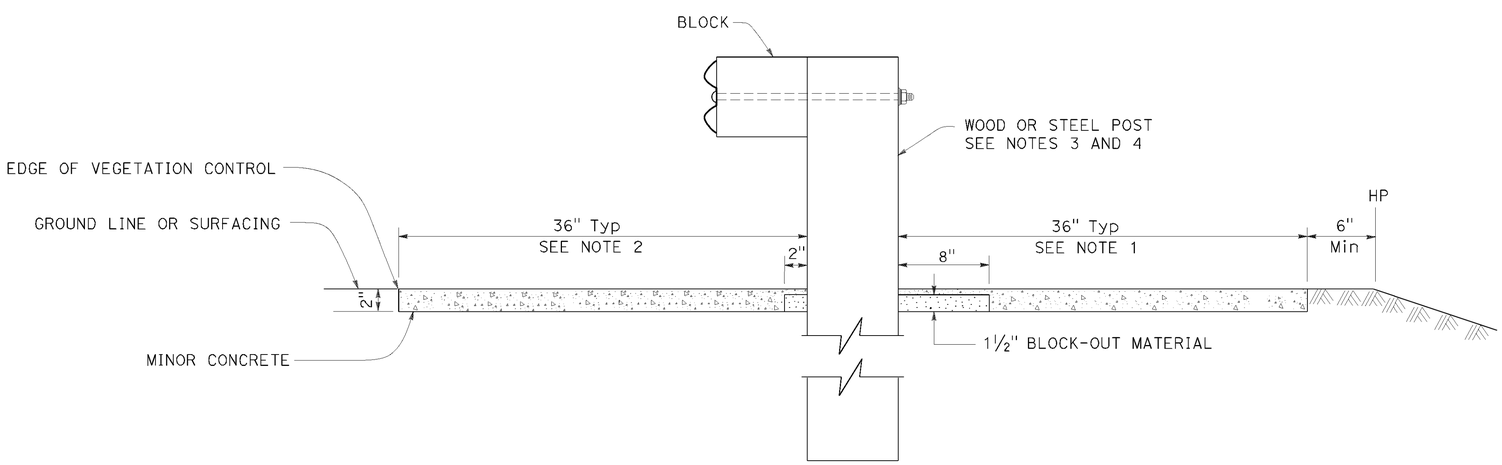

SECTION A-A

NOTES:

1. Where the distance between back of post and hinge point is less than 42", construct vegetation control to 6" from hinge point while maintaining the 8" block-out at back of post. If the 8" block-out at back of post can not be maintained, construct vegetation control flush with the back edge of post.
2. Where dike is constructed under railing, construct vegetation control to back edge of dike. Where paved shoulder is constructed within 36" in front of the post, construct vegetation control to the edge of paved shoulder.
3. For wood post sizes, see Revised Standard Plan RSP A77N1.
4. For steel post sizes, see Revised Standard Plan RSP A77N2.
5. For details not shown, see Revised Standard Plans RSP A77L1 and RSP A77L2.

STATE OF CALIFORNIA
DEPARTMENT OF TRANSPORTATION

MIDWEST GUARDRAIL SYSTEM TYPICAL VEGETATION CONTROL STANDARD RAILING SECTION

NO SCALE

RSP A77N5 DATED JULY 19, 2013 SUPPLEMENTS THE STANDARD PLANS BOOK DATED 2010.

REVISED STANDARD PLAN RSP A77N5

2010 REVISED STANDARD PLAN RSP A77N5

P:\PROJ\01\0e580\drafting\sheets\va007.dgn

7-3-13

Dist	COUNTY	ROUTE	POST MILES TOTAL PROJECT	SHEET No.	TOTAL SHEETS
01	Men	1,101	Var	20	36

Randell D. Hiatt
REGISTERED CIVIL ENGINEER

July 19, 2013
PLANS APPROVAL DATE

REGISTERED PROFESSIONAL ENGINEER
Randell D. Hiatt
No. C50200
Exp. 6-30-15
CIVIL
STATE OF CALIFORNIA

THE STATE OF CALIFORNIA OR ITS OFFICERS OR AGENTS SHALL NOT BE RESPONSIBLE FOR THE ACCURACY OR COMPLETENESS OF SCANNED COPIES OF THIS PLAN SHEET.

TO ACCOMPANY PLANS DATED 2-22-16

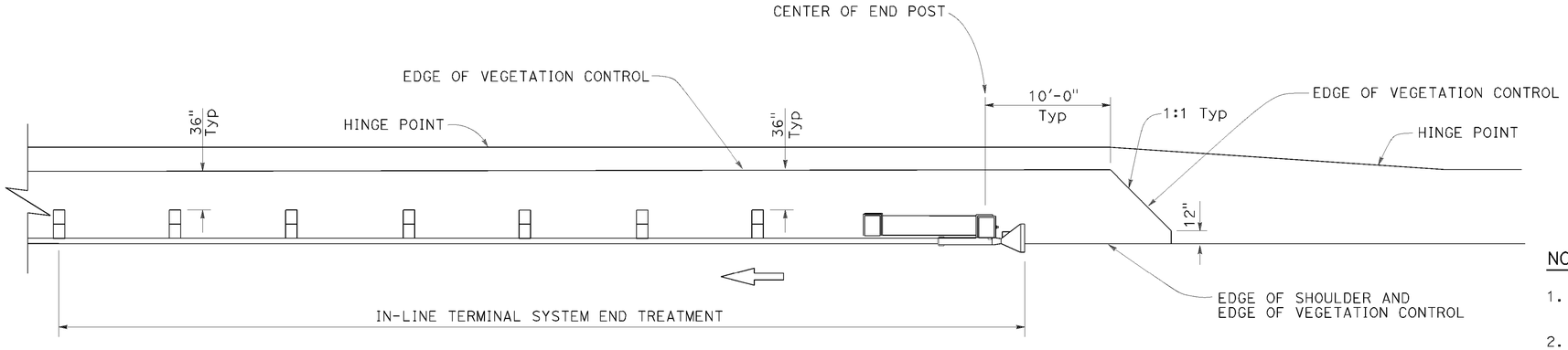

PLAN

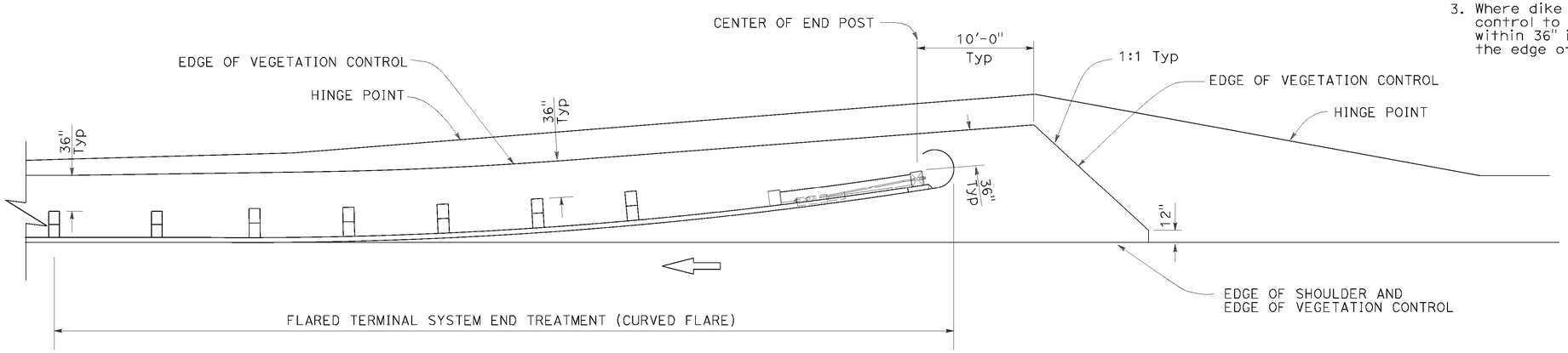

PLAN

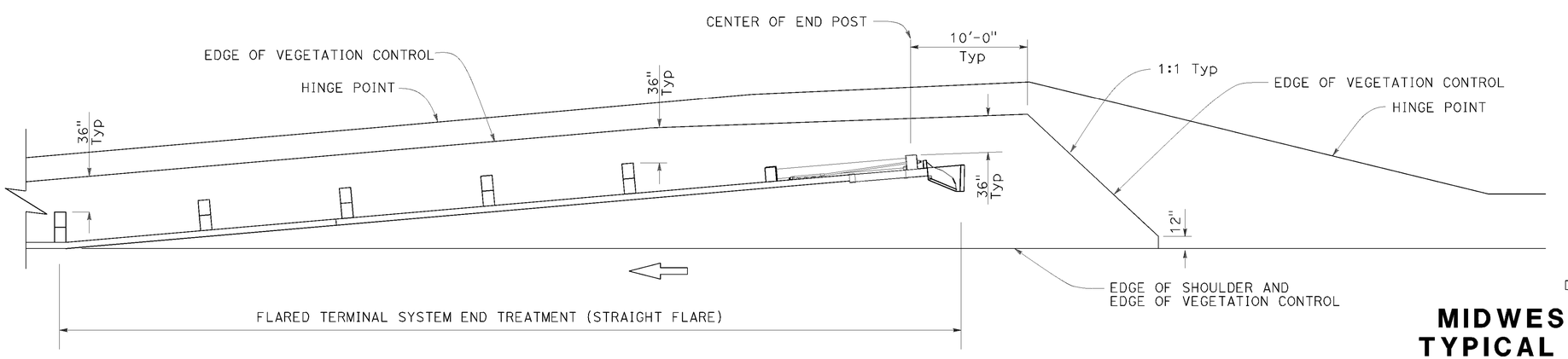

PLAN

NOTES:

1. See Revised Standard Plan RSP A77N5 for additional vegetation control details.
2. Where the distance between back of post and hinge point is less than 42", construct vegetation control to 6" from hinge point while maintaining the 8" block-out at back of post. If the 8" block-out at back of post can not be maintained, construct vegetation control flush with the back edge of post.
3. Where dike is constructed under railing, construct vegetation control to back edge of dike. Where paved shoulder is constructed within 36" in front of the post, construct vegetation control to the edge of paved shoulder.

STATE OF CALIFORNIA
DEPARTMENT OF TRANSPORTATION

MIDWEST GUARDRAIL SYSTEM TYPICAL VEGETATION CONTROL FOR TERMINAL SYSTEM END TREATMENTS

NO SCALE

RSP A77N6 DATED JULY 19, 2013 SUPPLEMENTS THE STANDARD PLANS BOOK DATED 2010.

REVISED STANDARD PLAN RSP A77N6

2010 REVISED STANDARD PLAN RSP A77N6

P:\PROJ\01\0e580\drafting\sheets\va008.dgn

6-12-13

Dist	COUNTY	ROUTE	POST MILES TOTAL PROJECT	SHEET No.	TOTAL SHEETS
01	Men	1,101	Var	21	36

Randell D. Hiatt
REGISTERED CIVIL ENGINEER

July 19, 2013
PLANS APPROVAL DATE

REGISTERED PROFESSIONAL ENGINEER
Randell D. Hiatt
No. C50200
Exp. 6-30-15
CIVIL
STATE OF CALIFORNIA

THE STATE OF CALIFORNIA OR ITS OFFICERS OR AGENTS SHALL NOT BE RESPONSIBLE FOR THE ACCURACY OR COMPLETENESS OF SCANNED COPIES OF THIS PLAN SHEET.

TO ACCOMPANY PLANS DATED 2-22-16

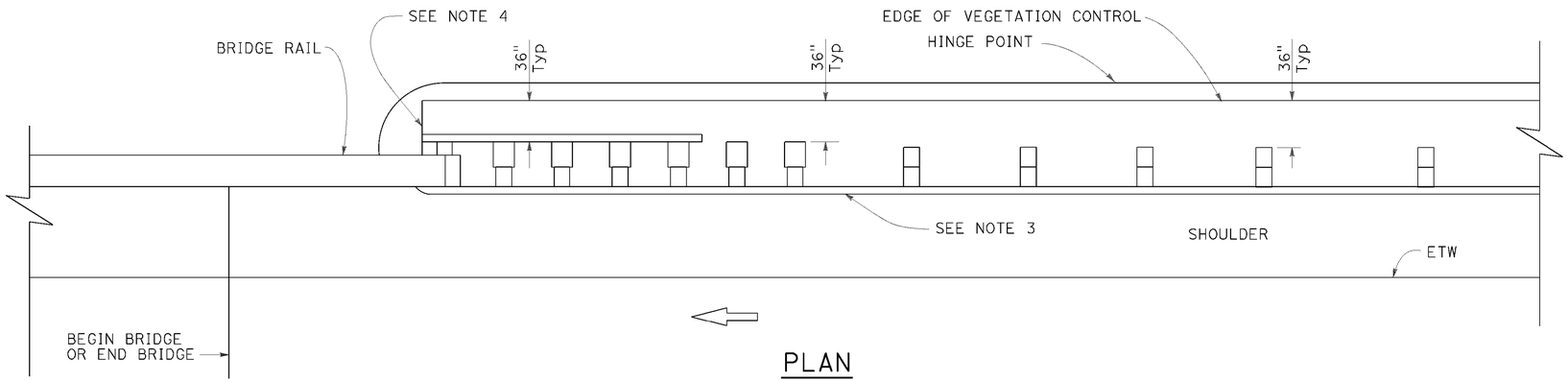

PLAN

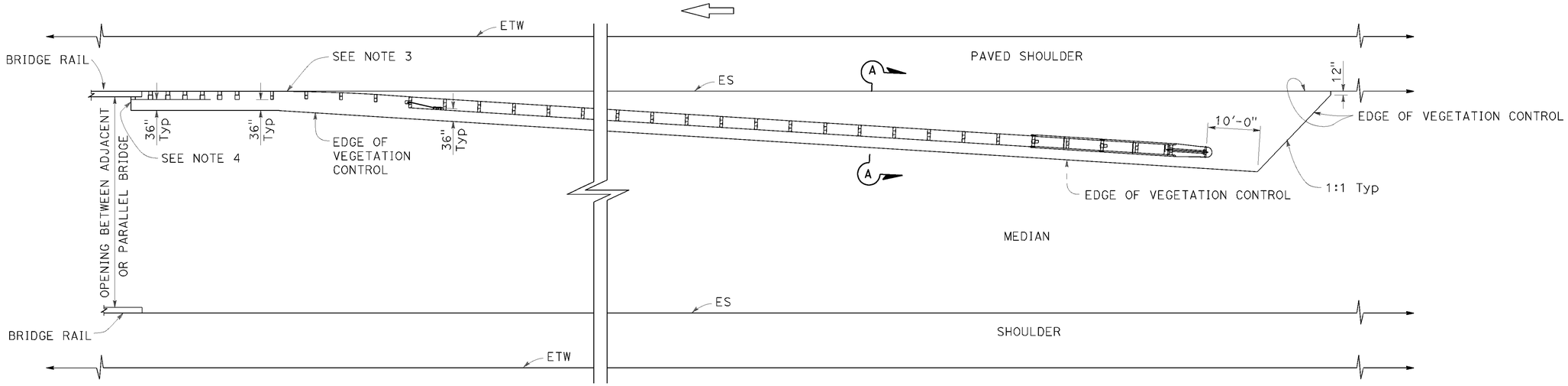

PLAN

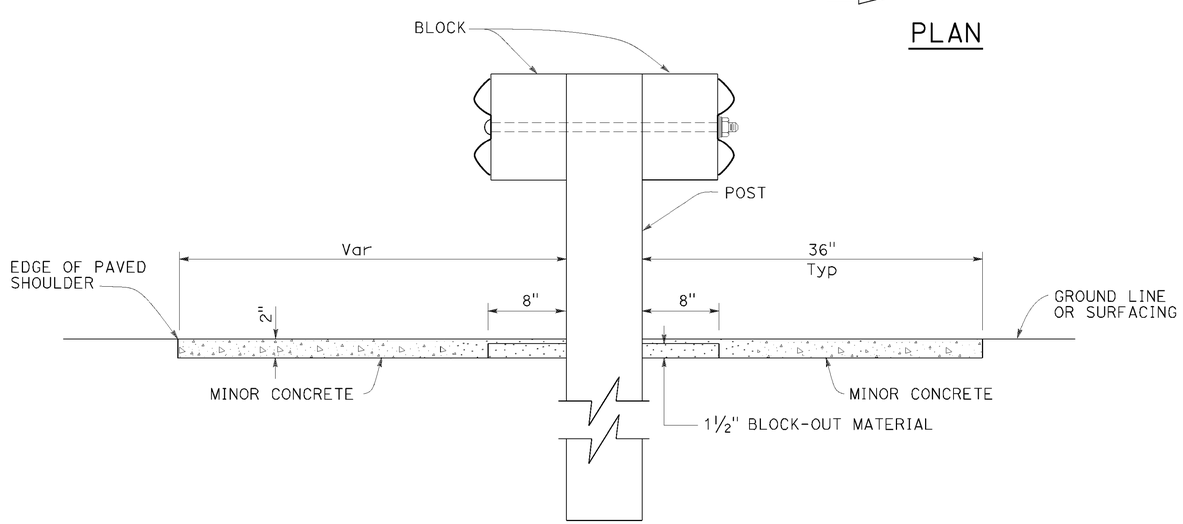

SECTION A-A

NOTES:

1. See Revised Standard Plan RSP A77N5 for additional vegetation control details.
2. Where the distance between back of post and hinge point is less than 42", construct vegetation control to 6" from hinge point while maintaining the 8" block-out at back of post. If the 8" block-out at back of post can not be maintained, construct vegetation control flush with the back edge of post.
3. Where dike is constructed under railing, construct vegetation control to back edge of dike. Where paved shoulder is constructed within 36" in front of the post, construct vegetation control to the edge of paved shoulder.
4. End vegetation control at end of backside rail element.

STATE OF CALIFORNIA
DEPARTMENT OF TRANSPORTATION

MIDWEST GUARDRAIL SYSTEM TYPICAL VEGETATION CONTROL AT STRUCTURE APPROACH

NO SCALE

RSP A77N7 DATED JULY 19, 2013 SUPPLEMENTS THE STANDARD PLANS BOOK DATED 2010.

REVISED STANDARD PLAN RSP A77N7

2010 REVISED STANDARD PLAN RSP A77N7

P:\PROJ\01\0e580\drafting\sheets\va009.dgn

6-12-13

Dist	COUNTY	ROUTE	POST MILES TOTAL PROJECT	SHEET No.	TOTAL SHEETS
01	Men	1,101	Var	22	36

Randell D. Hiatt
REGISTERED CIVIL ENGINEER

August 14, 2015
PLANS APPROVAL DATE

REGISTERED PROFESSIONAL ENGINEER
Randell D. Hiatt
No. C50200
Exp. 6-30-17
CIVIL
STATE OF CALIFORNIA

THE STATE OF CALIFORNIA OR ITS OFFICERS OR AGENTS SHALL NOT BE RESPONSIBLE FOR THE ACCURACY OR COMPLETENESS OF SCANNED COPIES OF THIS PLAN SHEET.

TO ACCOMPANY PLANS DATED 2-22-16

2010 REVISED STANDARD PLAN RSP A77Q1

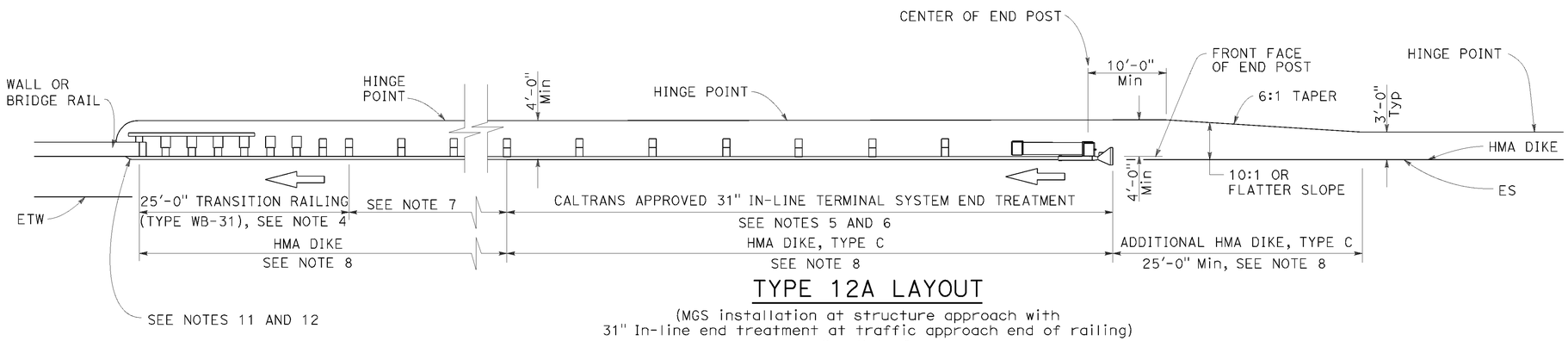

TYPE 12A LAYOUT

(MGS installation at structure approach with
31" In-line end treatment at traffic approach end of railing)
See Note 9

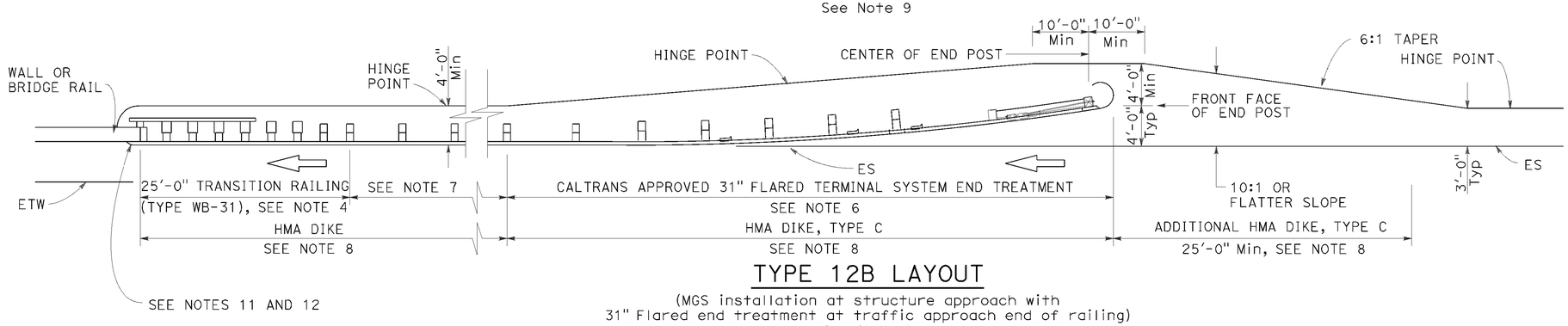

TYPE 12B LAYOUT

(MGS installation at structure approach with
31" Flared end treatment at traffic approach end of railing)
See Note 9

NOTES:

1. Line post, blocks and hardware to be used are shown on Revised Standard Plans RSP A77L1, RSP A77L2, RSP A77M1, RSP A77N1 and RSP A77N2.
2. MGS post spacing to be 6'-3" center to center, except as otherwise noted.
3. Except as noted, line posts are 6" x 8" x 6'-0" wood with 6" x 12" x 1'-2" wood blocks. W6 x 8.5 or W6 x 9 steel posts, 6'-0" in length, with 6" x 12" x 1'-2" notched wood blocks or plastic blocks may be used for 6" x 8" x 6'-0" wood posts with 6" x 12" x 1'-2" wood blocks where applicable and when specified.
4. For Transition Railing (Type WB-31) details for Types 12A and 12B Layouts, see Revised Standard Plan RSP A77U4.
5. 31" in-line terminal system end treatments are used where site conditions will not accommodate a 31" flared end treatment.
6. The type of 31" terminal system end treatment to be used will be shown on the Project Plans.
7. Dependent on site conditions (embankment height, side slopes, or other fixed objects), it may be advisable to construct additional guard railing (a length equal to multiples of 12'-6" with 6'-3" post spacing) between the transition railing and end treatment. A 12.5 degree angle of departure can be drawn on the Project Plans from the edge of traveled way through the outer most point of the fixed object to determine the additional length of railing needed.
8. Where placement of dike is required with guard railing installations, see Revised Standard Plan RSP A77N4 for dike positioning details.
9. Type 12A or Type 12B Layouts are typically used:
   a. To the right of approaching traffic, at the end of a structure, on two-lane conventional highway where the roadbed width across the structure is less than 40 feet.
   b. To the left of approaching traffic, at the end of a structure, on two-lane conventional highway where the roadbed width across the structure is less than 40 feet.
   c. To the right of approaching traffic at the end of each structure on multilane freeways or expressways with separate adjacent or parallel bridges.
   d. To the right of approaching traffic at the end of the structure on multilane freeways or expressways with decked median on the bridge.
10. See Revised Standard Plan RSP A77Q3 for typical layout used left of approaching traffic at the ends of each structure on multilane freeways or expressways with separate adjacent or parallel bridges.
11. For additional details of typical connections to bridge rail, see Connection Detail AA on Revised Standard Plans RSP A77U1 and RSP A77U2 and Connection Detail FF on Revised Standard Plans RSP A77V1 and RSP A77V2.
12. For additional details of a typical connection to walls or abutments, see Revised Standard Plan RSP A77U3.

STATE OF CALIFORNIA
DEPARTMENT OF TRANSPORTATION

MIDWEST GUARDRAIL SYSTEM TYPICAL LAYOUTS FOR STRUCTURE APPROACH

NO SCALE

RSP A77Q1 DATED AUGUST 14, 2015 SUPERSEDES RSP A77Q1 DATED JULY 19, 2013 THAT SUPPLEMENTS THE STANDARD PLANS BOOK DATED 2010.

REVISED STANDARD PLAN RSP A77Q1

P:\PROJ\01\0e580\drafting\sheets\va010.dgn

8-12-15

Dist	COUNTY	ROUTE	POST MILES TOTAL PROJECT	SHEET No.	TOTAL SHEETS
01	Men	1,101	Var	23	36

Randell D. Hiatt
REGISTERED CIVIL ENGINEER

August 14, 2015
PLANS APPROVAL DATE

REGISTERED PROFESSIONAL ENGINEER
Randell D. Hiatt
No. C50200
Exp. 6-30-17
CIVIL
STATE OF CALIFORNIA

THE STATE OF CALIFORNIA OR ITS OFFICERS OR AGENTS SHALL NOT BE RESPONSIBLE FOR THE ACCURACY OR COMPLETENESS OF SCANNED COPIES OF THIS PLAN SHEET.

TO ACCOMPANY PLANS DATED 2-22-16

2010 REVISED STANDARD PLAN RSP A77Q4

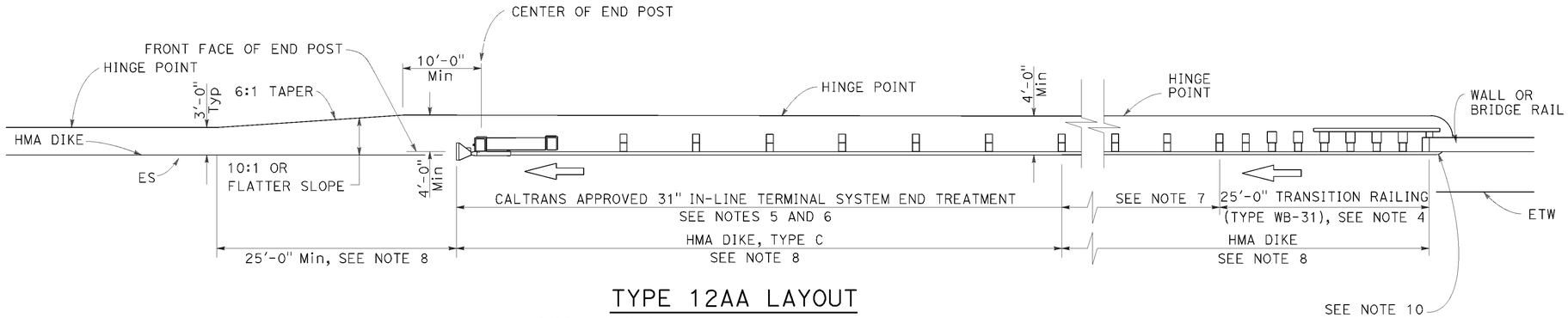

TYPE 12AA LAYOUT

(MGS installation at structure departure with
31" in-line end treatment at trailing end of railing)
See Notes 8 and 9

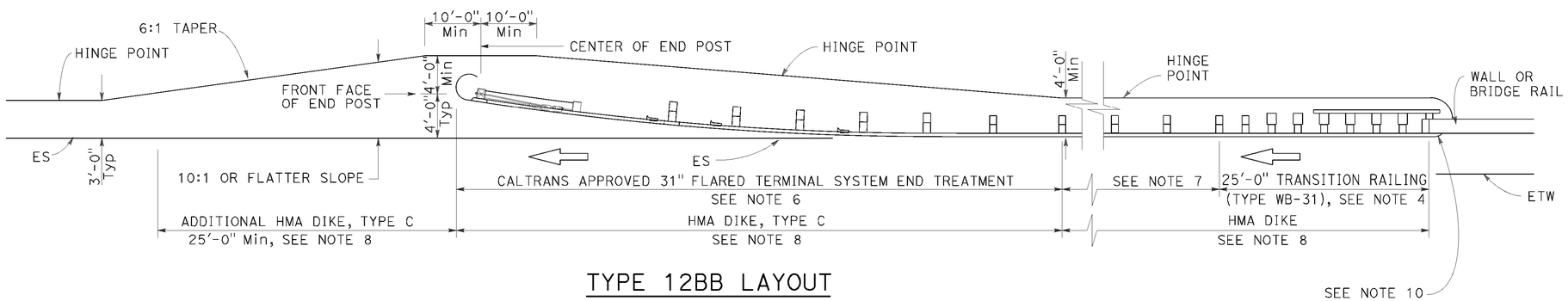

TYPE 12BB LAYOUT

(MGS installation at structure departure with
31" flared end treatment at trailing end of railing)
See Notes 8 and 9

NOTES:

1. Line post, blocks and hardware to be used are shown on Revised Standard Plans RSP A77L1, RSP A77L2, RSP A77M1, RSP A77N1 and RSP A77N2.
2. MGS post spacing to be 6'-3" center to center, except as otherwise noted.
3. Except as noted, line posts are 6" x 8" x 6'-0" wood with 6" x 12" x 1'-2" wood blocks. W6 x 8.5 or W6 x 9 steel posts, 6'-0" in length, with 6" x 12" x 1-2" notched wood blocks or notched recycled plastic blocks may be used for 6" x 8" x 6'-0" wood posts with 6" x 12" x 1'-2" wood blocks where applicable and when specified.
4. For Transition Railing (Type WB-31) details for Types 12AA and 12BB Layouts, see Revised Standard Plan RSP A77U4.
5. 31" in-line terminal system treatments are used where site conditions will not accommodate a 31" flared end treatment.
6. The type of 31" terminal system to be used will be shown on the Project Plans.
7. Dependent on site conditions (embankment height, side slopes, other fixed objects), it may be advisable to construct additional MGS (a length equal to multiples of 12'-6" with 6'-3" post spacing) between the transition railing and 31" end treatments.
8. Where placement of dike is required with MGS installations, see Revised Standard Plan RSP A77N4 for dike positioning details.
9. Type 12AA or Type 12BB Layouts are typically used to the right of traffic departing a structure on two-way conventional highways where the roadbed width across the structure is less than 40 feet.
10. For additional details of typical connections to bridge rail, see Connection Detail CC on Revised Standard Plan RSP A77U2 and Connection Detail HH on Revised Standard Plan RSP A77V2.

STATE OF CALIFORNIA
DEPARTMENT OF TRANSPORTATION

MIDWEST GUARDRAIL SYSTEM TYPICAL LAYOUTS FOR STRUCTURE DEPARTURE

NO SCALE

RSP A77Q4 DATED AUGUST 14, 2015 SUPERSEDES RSP A77Q4 DATED JULY 19, 2013 THAT SUPPLEMENTS THE STANDARD PLANS BOOK DATED 2010.

REVISED STANDARD PLAN RSP A77Q4

P:\PROJ\01\0e580\drafting\sheets\vd011.dgn

8-12-15

Dist	COUNTY	ROUTE	POST MILES TOTAL PROJECT	SHEET No.	TOTAL SHEETS
01	Men	1,101	Var	24	36

Randell D. Hiatt
REGISTERED CIVIL ENGINEER

July 19, 2013
PLANS APPROVAL DATE

REGISTERED PROFESSIONAL ENGINEER
Randell D. Hiatt
No. C50200
Exp. 6-30-15
CIVIL
STATE OF CALIFORNIA

THE STATE OF CALIFORNIA OR ITS OFFICERS OR AGENTS SHALL NOT BE RESPONSIBLE FOR THE ACCURACY OR COMPLETENESS OF SCANNED COPIES OF THIS PLAN SHEET.

TO ACCOMPANY PLANS DATED 2-22-16

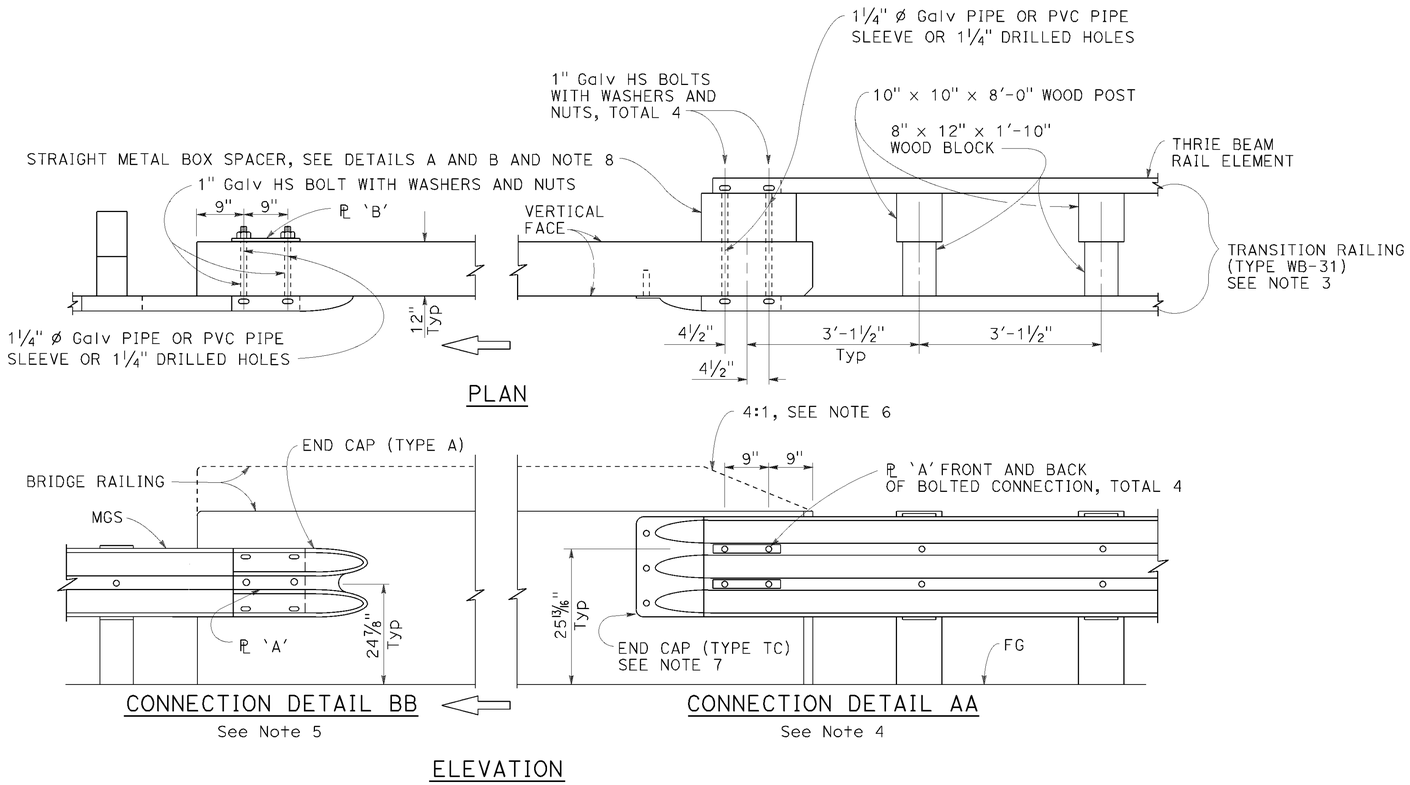

MIDWEST GUARDRAIL SYSTEM CONNECTION TO BRIDGE RAILING WITHOUT SIDEWALK

NOTES:

1. See Revised Standard Plan RSP A77U2 for additional connection details to bridges without sidewalks.
2. Additional details of posts, blocks and hardware are shown on Revised Standard Plans RSP A77M1, RSP A77N1 and RSP A77N2.
3. For additional details of Transition Railing (Type WB-31), see Revised Standard Plan RSP A77U4. Transition Railing (Type WB-31) transitions the 12 gauge MGS railing section to a heavier gage nested thrie beam railing section which is connected to the concrete bridge railing.
4. For typical use of Connection Detail AA, see Layout Types 12A and 12B on Revised Standard Plan RSP A77Q1, Layout Types 12C and 12D on Revised Standard Plan RSP A77Q2, and Layout Type 12E on Revised Standard Plan RSP A77Q3.
5. For typical use of Connection Detail BB, see Layout Type 12D (structure departure railing connection) on Revised Standard Plan RSP A77Q2 and Layout Type 12DD on Revised Standard Plan RSP A77Q5.
6. Where the height of the bridge railing exceeds the height of the thrie beam railing by more than 1" at Connection Detail AA, taper the top of the end of the bridge railing at 4:1 to match the top elevation of the thrie beam rail.
7. For details of End Cap (Type TC), see Revised Standard Plan RSP A77U4.
8. See Revised Standard Plan RSP A77U4 for additional details regarding depth dimension for straight metal box spacer.

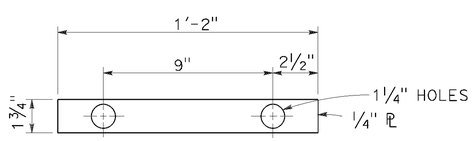

PLATE 'A'

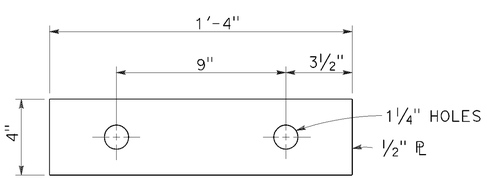

PLATE 'B'
(For backside of connection BB)

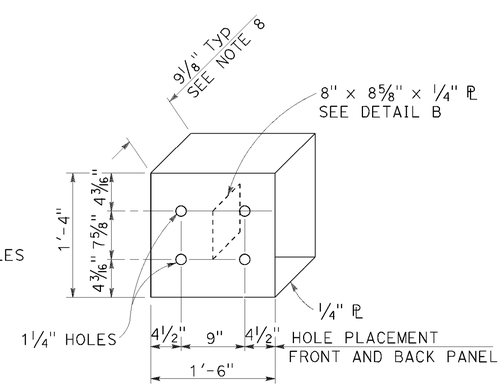

DETAIL A

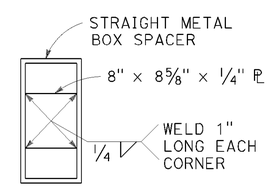

DETAIL B

STRAIGHT METAL BOX SPACER

STATE OF CALIFORNIA
DEPARTMENT OF TRANSPORTATION

MIDWEST GUARDRAIL SYSTEM CONNECTIONS TO BRIDGE RAILINGS WITHOUT SIDEWALKS DETAILS No. 1

NO SCALE

RSP A77U1 DATED JULY 19, 2013 SUPPLEMENTS THE STANDARD PLANS BOOK DATED 2010.

REVISED STANDARD PLAN RSP A77U1

2010 REVISED STANDARD PLAN RSP A77U1

P:\PROJ\01\0e580\drafting\sheets\va012.dgn

7-8-13

Dist	COUNTY	ROUTE	POST MILES TOTAL PROJECT	SHEET No.	TOTAL SHEETS
01	Men	1,101	Var	25	36

Randell D. Hiatt
REGISTERED CIVIL ENGINEER

July 19, 2013
PLANS APPROVAL DATE

REGISTERED PROFESSIONAL ENGINEER
Randell D. Hiatt
No. C50200
Exp. 6-30-15
CIVIL
STATE OF CALIFORNIA

THE STATE OF CALIFORNIA OR ITS OFFICERS OR AGENTS SHALL NOT BE RESPONSIBLE FOR THE ACCURACY OR COMPLETENESS OF SCANNED COPIES OF THIS PLAN SHEET.

TO ACCOMPANY PLANS DATED 2-22-16

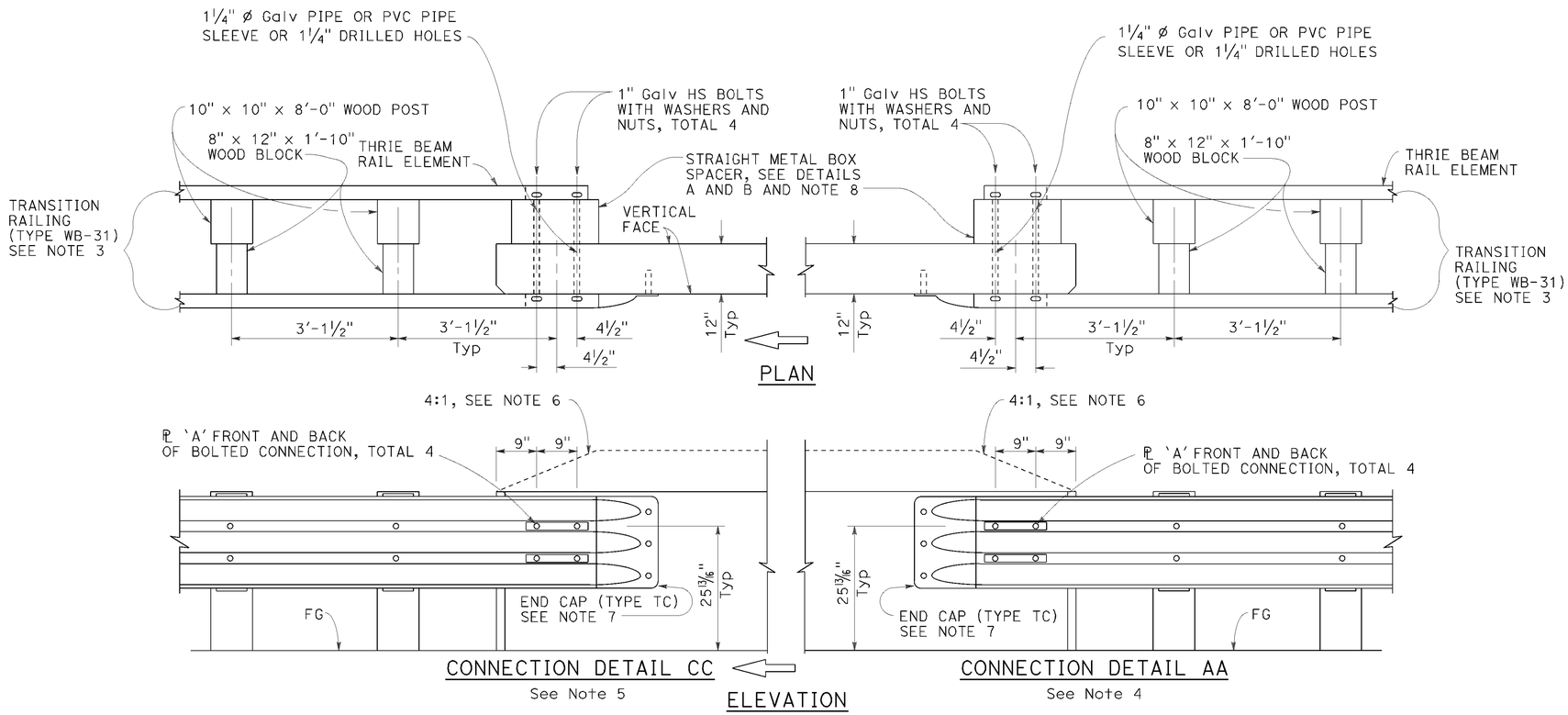

MIDWEST GUARDRAIL SYSTEM CONNECTION TO BRIDGE RAILING WITHOUT SIDEWALK

NOTES:

1. See Revised Standard Plan RSP A77U1 for additional connection details to bridges without sidewalks.
2. Additional details of posts, blocks and hardware are shown on Revised Standard Plans RSP A77M1, RSP A77N1 and RSP A77N2.
3. For additional details of Transition Railing (Type WB-31), see Revised Standard Plan RSP A77U4. Transition Railing (Type WB-31) transitions the 12 gauge MGS railing section to a heavier gage nested thrie beam railing section which is connected to the concrete bridge railing.
4. For typical use of Connection Detail AA, see Layout Types 12A and 12B on Revised Standard Plan RSP A77Q1, Layout Types 12C and 12D on Revised Standard Plan RSP A77Q2, and Layout Type 12E on Revised Standard Plan RSP A77Q3.
5. For typical use of Connection Detail CC, see Layout Types 12AA and 12BB on Revised Standard Plan RSP A77Q4 and Layout Type 12CC on Revised Standard Plan RSP A77Q5.
6. Where the height of the bridge railing exceeds the height of the thrie beam railing by more than 1" at Connection Detail AA and connection Detail CC, taper the top of the end of the bridge railing at 4:1 to match the top elevation of the thrie beam railing.
7. For details of End Cap (Type TC), see Revised Standard Plan RSP A77U4.
8. See Revised Standard Plan RSP A77U4 for additional details regarding depth dimension for straight metal box spacer.

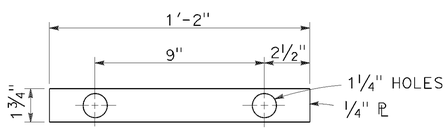

PLATE 'A'

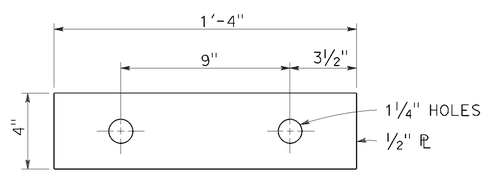

PLATE 'B'
(For backside of connection BB)

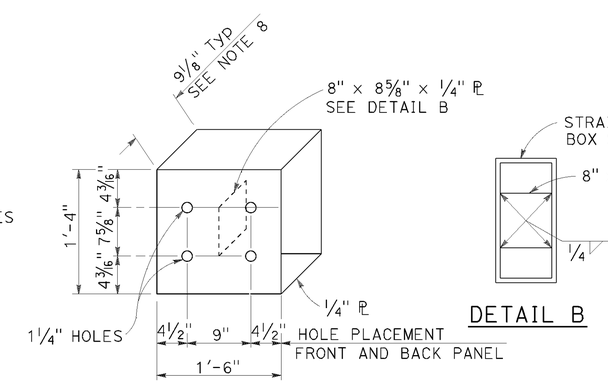

STATE OF CALIFORNIA
DEPARTMENT OF TRANSPORTATION

MIDWEST GUARDRAIL SYSTEM CONNECTIONS TO BRIDGE RAILINGS WITHOUT SIDEWALKS DETAILS No. 2

NO SCALE

RSP A77U2 DATED JULY 19, 2013 SUPPLEMENTS THE STANDARD PLANS BOOK DATED 2010.

REVISED STANDARD PLAN RSP A77U2

2010 REVISED STANDARD PLAN RSP A77U2

P:\PROJ\01\0e580\drafting\sheets\va013.dgn

6-20-13

Dist	COUNTY	ROUTE	POST MILES TOTAL PROJECT	SHEET No.	TOTAL SHEETS
01	Men	1,101	Var	26	36

Randell D. Hiatt
REGISTERED CIVIL ENGINEER

January 23, 2015
PLANS APPROVAL DATE

REGISTERED PROFESSIONAL ENGINEER Randell D. Hiatt No. C50200 Exp. 6-30-15 CIVIL STATE OF CALIFORNIA

THE STATE OF CALIFORNIA OR ITS OFFICERS OR AGENTS SHALL NOT BE RESPONSIBLE FOR THE ACCURACY OR COMPLETENESS OF SCANNED COPIES OF THIS PLAN SHEET.

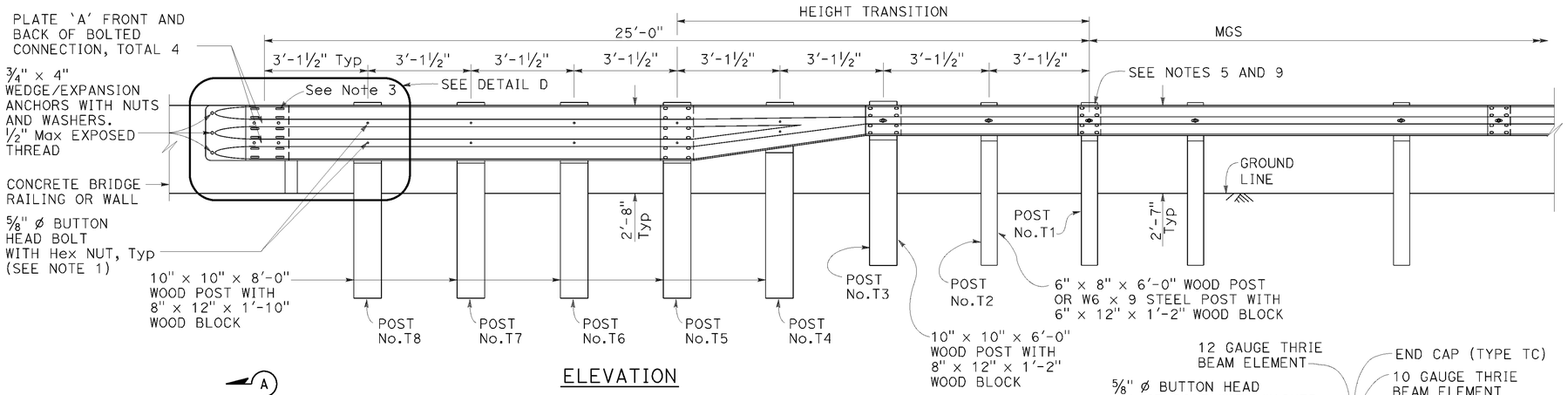

ELEVATION

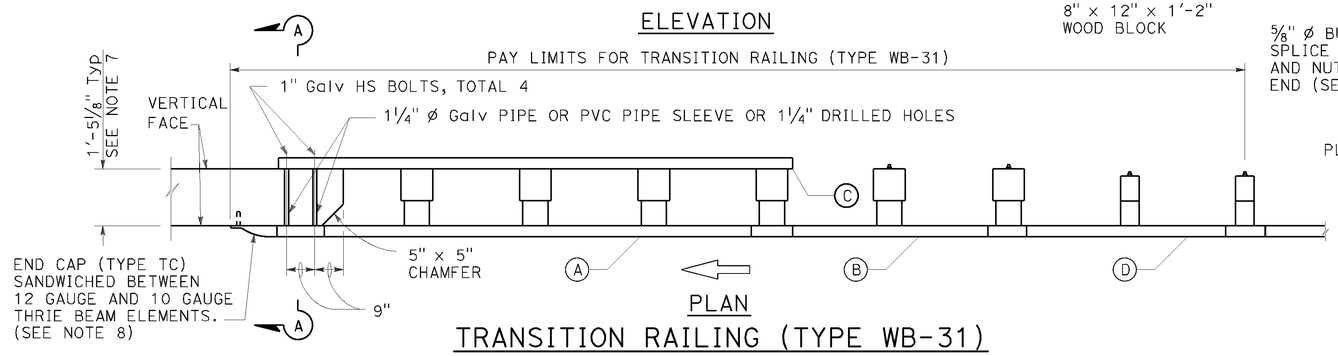

PLAN

TRANSITION RAILING (TYPE WB-31)

(No Blockout Attachment)

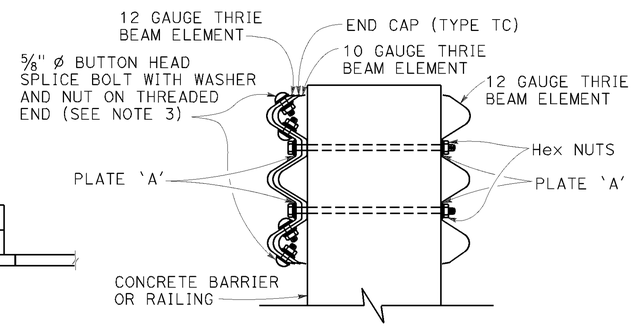

SECTION A-A

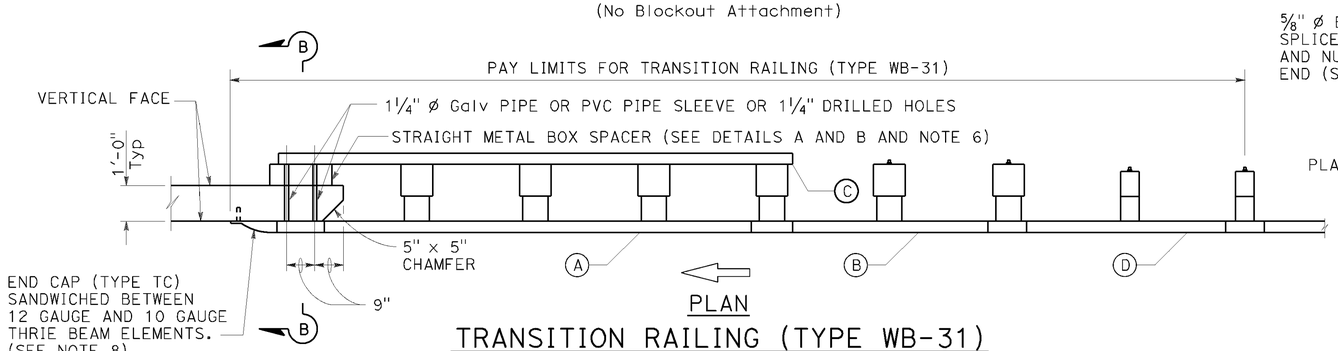

PLAN

TRANSITION RAILING (TYPE WB-31)

(Blockout Attachment)

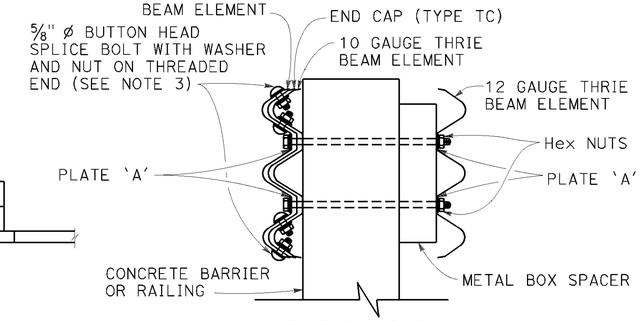

SECTION B-B

NOTES:

TO ACCOMPANY PLANS DATED 2-22-16

1. Use 5/8" ø Button head bolts and hex nuts for connections to posts. No washer on rail face for bolted connections to post.
2. The nested rail elements, end cap, and 'W' beam to thrie beam element may be spliced together prior to bolting the elements to the wood post and concrete barrier or railing.
3. Exterior splice bolt holes for rail element splices at Post No. T5 and the connection to the concrete barrier or railing shall be the standard 29/32" x 1 1/8" slot size. Interior splice bolt holes at these locations may be increased up to 1 1/4" ø. Only the top 4 and the bottom 4 splice bolts with washers and nuts are required for rail splices at Post No. T5 and the connection to the concrete barrier or railing.
4. The top elevation of Posts No. T2 through No. T7 shall not project more than 1" above the top elevation of the rail element.
5. Typically, the railing connected to Transition Railing (Type WB-31) will be either standard railing section of MGS with height transition ratio of 150:1 or a Caltrans approved 31" end treatment attached to Post No. T1.
6. The depth of the metal box spacer varies from the 9 1/8" to 1 1/2" and is dependent on the width of the concrete railing or wall. The combined dimension for the depth of the metal box spacer plus the width of railing or wall is typically 21 1/8". Where the space between the backside of the concrete railing or wall and the rear thrie beam element is less than 1 1/2", metal plates similar to Plate 'A' are to be used as spacers.
7. Where the width of the concrete railing or wall is greater than 17 1/8", wood blocks are to be used to fill the space created between the backside of Posts No. T5 through No. T8 and the rear thrie beam element. These wood blocks shall be 8" in width and 1'-2" in length. The dimension between the front thrie beam element and the rear thrie beam element is to match the width of the concrete railing or wall.
8. End cap may be installed over 12 gauge and 10 gauge thrie beam elements where transition railing is installed on the departure end of bridge railing.
9. Conform standard railing section height to 31" at Post No. T1 using height transition ratio of 150:1.

LEGEND:

(A) NESTED THRIE BEAM ELEMENTS (ONE 12 GAUGE ELEMENT NESTED OVER ONE 10 GAUGE ELEMENT).

(B) ONE ASYMMETRICAL 10 GAUGE "W" BEAM TO THRIE BEAM ELEMENT.

(C) ONE 12 GAUGE THRIE BEAM ELEMENT.

(D) ONE 10 GAUGE "W" BEAM RAIL ELEMENT (7'-3 1/2" LENGTH)

10 GAUGE = 0.138" THICK
12 GAUGE = 0.108" THICK

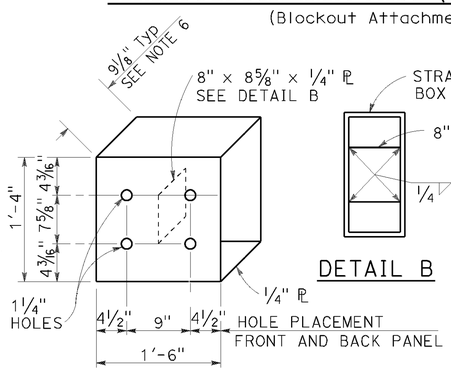

DETAIL A

STRAIGHT METAL BOX SPACER

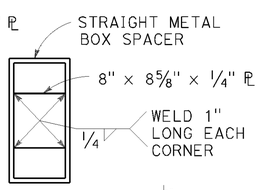

DETAIL B

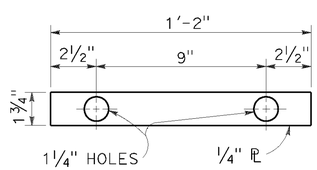

DETAIL C

PLATE 'A'

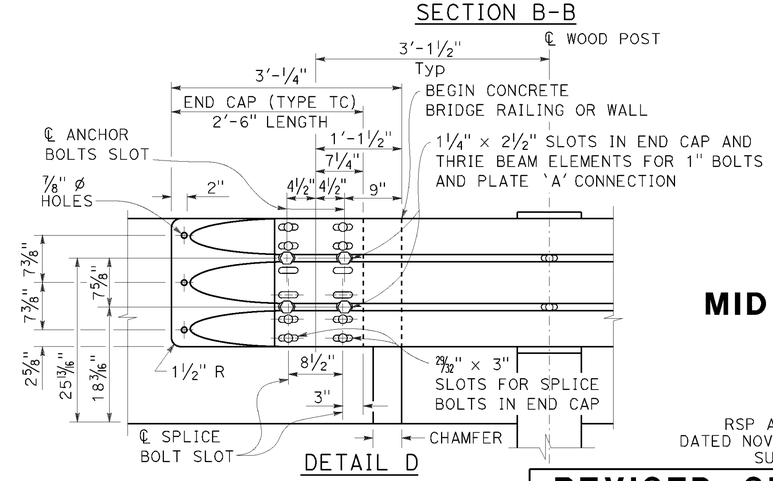

DETAIL D

STATE OF CALIFORNIA
DEPARTMENT OF TRANSPORTATION

MIDWEST GUARDRAIL SYSTEM TRANSITION RAILING (TYPE WB-31)

NO SCALE

RSP A77U4 DATED JANUARY 23, 2015 SUPERSEDES RSP A77U4 DATED NOVEMBER 15, 2013 AND RSP A77U4 DATED JULY 19, 2013 THAT SUPPLEMENTS THE STANDARD PLANS BOOK DATED 2010.

REVISED STANDARD PLAN RSP A77U4

2010 REVISED STANDARD PLAN RSP A77U4

P:\PROJ\01\0e580\drafting\sheets\va014.dgn

1-8-15

Dist	COUNTY	ROUTE	POST MILES TOTAL PROJECT	SHEET No.	TOTAL SHEETS
01	Men	1,101	Var	27	36

REGISTERED CIVIL ENGINEER

October 30, 2015
PLANS APPROVAL DATE

REGISTERED PROFESSIONAL ENGINEER Efthymios Delis No. C51434 Exp. 6-30-17 CIVIL STATE OF CALIFORNIA

THE STATE OF CALIFORNIA OR ITS OFFICERS OR AGENTS SHALL NOT BE RESPONSIBLE FOR THE ACCURACY OR COMPLETENESS OF SCANNED COPIES OF THIS PLAN SHEET.

TO ACCOMPANY PLANS DATED 2-22-16

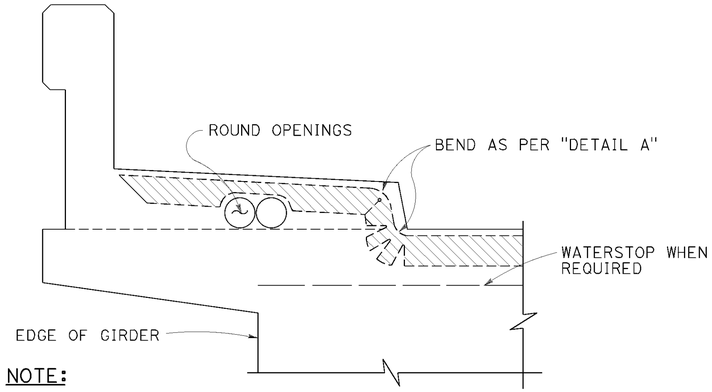

NOTE:
Type "B" seal shown. Type "A" seals to comform to the general path of seal shown, cuts for bending not required. Bend type "A" seals 3" up into curb or barrier rail on only the low end of the seal.

CONCRETE BARRIER AND SIDEWALK

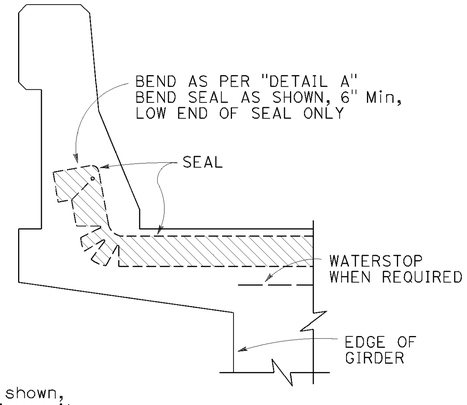

CONCRETE BARRIER

JOINT SEALS DETAILS

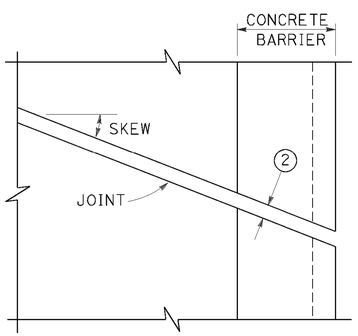

PLAN OF JOINT (SKEW ≤ 20°)

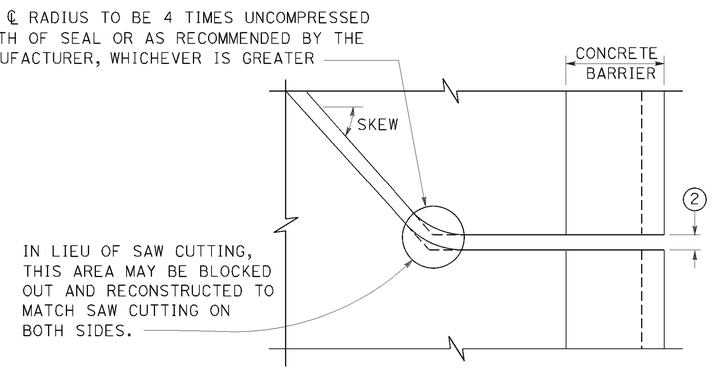

PLAN OF JOINT (SKEW > 20°)

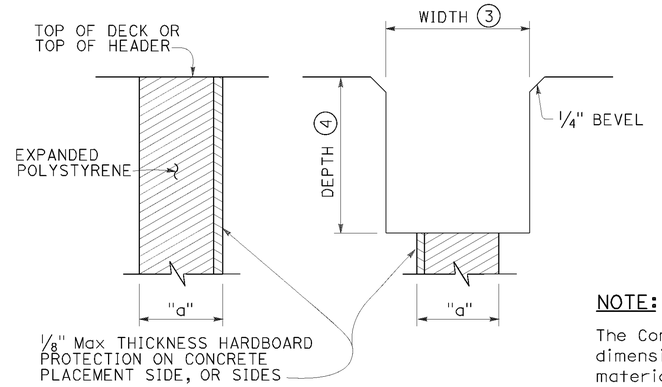

FORMING DETAIL SAWCUT DETAIL

NOTE:
The Contractor shall verify all controlling field dimensions before ordering or fabricatiing any material.

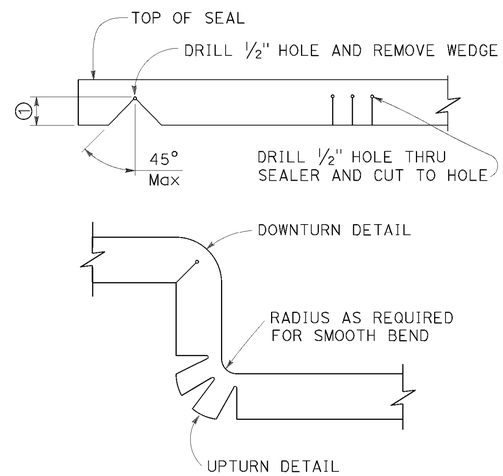

DETAIL A

NOTES:

1. Make smooth cuts from the bottom of seal to 1½" clear of top leaving at least one complete cell between the top of the cut and top of the seal. When necessary cut back of seal to clear conduit and round openings.
2. Opening in barrier to match width of sawn deck joint.
3. Sawcut groove widths shall be as ordered by the Engineer.
4. Depth of sawcut: Type A - Depth to be 2" minimum.
   Type B - Depth to be equal to or greater than the depth of seal measured along the contact surface, when compressed to minimum width position (W_2) plus dimensions shown.
5. MR (movement rating) as shown on other plan sheets.
6. Other depths must be approved by the Engineer.
7. A sidewalk joint shall be covered by an expansion joint armor.

DIMENSIONS "a" OF JOINT REQUIRED

MOVEMENT RATING (MR) 5	BRIDGE TYPE	"a" DIMENSION DECK CONCRETE PLACED		
		WINTER	FALL-SPRING	SUMMER
2"	ALL EXCEPT CIP/PS	1½"	1¼"	¾"
	CIP/PS	1¼"	1"	½"
1½"	ALL EXCEPT CIP/PS	1¼"	1"	½"
	CIP/PS	1"	¾"	½"
1"	ALL EXCEPT CIP/PS	1"	¾"	½"
	CIP/PS	¾"	½"	½"
½"	ALL EXCEPT CIP/PS	¾"	¾"	½"
	CIP/PS	½"	½"	½"

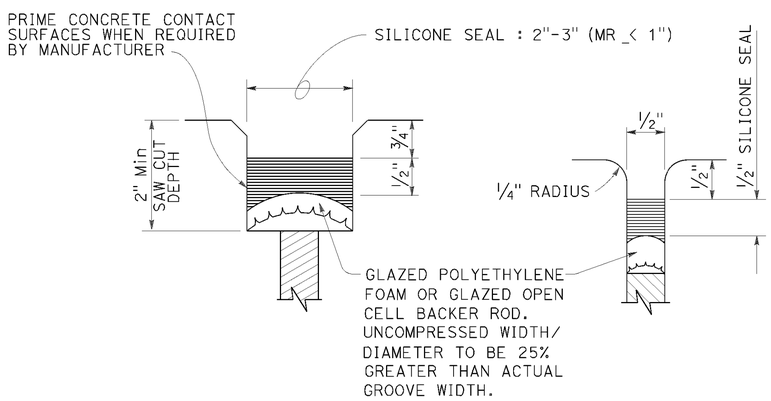

TYPE A SEAL
Movement rating : Silicone = 1" Max

TYPE AL SEAL
Longitudinal joints only

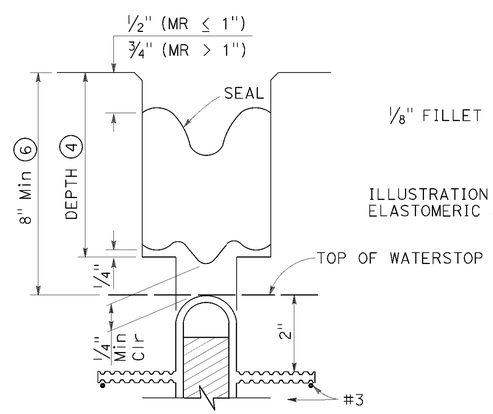

TYPE B JOINT SEAL
IN MINIMUM WIDTH POSITION (W_2)

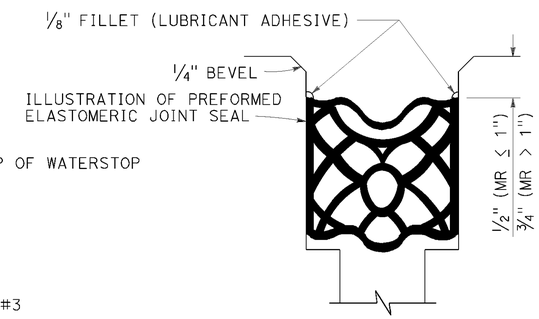

TYPE B SEAL
Movement Rating ≤ 2"

STATE OF CALIFORNIA
DEPARTMENT OF TRANSPORTATION

JOINT SEALS (MAXIMUM MOVEMENT RATING = 2")

NO SCALE

RSP B6-21 DATED OCTOBER 30, 2015 SUPERSEDES STANDARD PLAN B6-21 DATED MAY 20, 2011 - PAGE 283 OF THE STANDARD PLANS BOOK DATED 2010.

REVISED STANDARD PLAN RSP B6-21

2010 REVISED STANDARD PLAN RSP B6-21

P:\PROJ\01\0e580\drafting\sheets\va015.dgn

8-18-15

Dist	COUNTY	ROUTE	POST MILES TOTAL PROJECT	SHEET No.	TOTAL SHEETS
01	Men	1,101	Var	28	36

REGISTERED CIVIL ENGINEER

July 19, 2013
PLANS APPROVAL DATE

REGISTERED PROFESSIONAL ENGINEER
Gurinderpal Bhullar
No. C48815
Exp. 9-30-14
CIVIL
STATE OF CALIFORNIA

THE STATE OF CALIFORNIA OR ITS OFFICERS OR AGENTS SHALL NOT BE RESPONSIBLE FOR THE ACCURACY OR COMPLETENESS OF SCANNED COPIES OF THIS PLAN SHEET.

TO ACCOMPANY PLANS DATED 2-22-16

2010 REVISED STANDARD PLAN RSP T9

TABLE 1

TAPER LENGTH CRITERIA AND CHANNELIZING DEVICE SPACING

SPEED (S)	MINIMUM TAPER LENGTH * FOR WIDTH OF OFFSET 12 FEET (W)				MAXIMUM CHANNELIZING DEVICE SPACING		
					X	Y	Z **
	TANGENT 2L	MERGING L	SHIFTING L/2	SHOULDER L/3	TAPER	TANGENT	CONFLICT
mph	ft	ft	ft	ft	ft	ft	ft
20	160	80	40	27	20	40	10
25	250	125	63	42	25	50	12
30	360	180	90	60	30	60	15
35	490	245	123	82	35	70	17
40	640	320	160	107	40	80	20
45	1080	540	270	180	45	90	22
50	1200	600	300	200	50	100	25
55	1320	660	330	220	55	110	27
60	1440	720	360	240	60	120	30
65	1560	780	390	260	65	130	32
70	1680	840	420	280	70	140	35

* - For other offsets, use the following merging taper length formula for L:
For speed of 40 mph or less, $L = WS^2/60$
For speed of 45 mph or more, $L = WS$

Where: L = Taper length in feet
W = Width of offset in feet
S = Posted speed limit, off-peak 85th-percentile speed prior to work starting, or the anticipated operating speed in mph

** - Use for taper and tangent sections where there are no pavement markings or where there is a conflict between existing pavement markings and channelizers (CA).

TABLE 2

LONGITUDINAL BUFFER SPACE AND FLAGGER STATION SPACING

SPEED *	Min D **	DOWNGRADE Min D ***		
		-3%	-6%	-9%
mph	ft	ft	ft	ft
20	115	116	120	126
25	155	158	165	173
30	200	205	215	227
35	250	257	271	287
40	305	315	333	354
45	360	378	400	427
50	425	446	474	507
55	495	520	553	593
60	570	598	638	686
65	645	682	728	785
70	730	771	825	891

* - Speed is posted speed limit, off-peak 85th-percentile speed prior to work starting, or the anticipated operating speed in mph

** - Longitudinal buffer space or flagger station spacing

*** - Use on sustained downgrade steeper than -3 percent and longer than 1 mile.

TABLE 3

ADVANCE WARNING SIGN SPACING

ROAD TYPE	DISTANCE BETWEEN SIGNS *		
	A	B	C
	ft	ft	ft
URBAN - 25 mph OR LESS	100	100	100
URBAN - MORE THAN 25 mph TO 40 mph	250	250	250
URBAN - MORE THAN 40 mph	350	350	350
RURAL	500	500	500
EXPRESSWAY / FREEWAY	1000	1500	2640

* - The distances are approximate, are intended for guidance purposes only, and should be applied with engineering judgment. These distances should be adjusted by the Engineer for field conditions, if necessary, by increasing or decreasing the recommmended distances.

STATE OF CALIFORNIA
DEPARTMENT OF TRANSPORTATION

TRAFFIC CONTROL SYSTEM TABLES FOR LANE AND RAMP CLOSURES

NO SCALE

RSP T9 DATED JULY 19, 2013 SUPERSEDES RSP T9 DATED APRIL 19, 2013 THAT SUPPLEMENTS THE STANDARD PLANS BOOK DATED 2010.

REVISED STANDARD PLAN RSP T9

P:\PROJ\01\0e580\drafting\sheets\va016.dgn

4-30-13

TO ACCOMPANY PLANS DATED 2-22-16

Dist	COUNTY	ROUTE	POST MILES TOTAL PROJECT	SHEET No.	TOTAL SHEETS
01	Men	1,101	Var	29	36

REGISTERED CIVIL ENGINEER

April 19, 2013
PLANS APPROVAL DATE

REGISTERED PROFESSIONAL ENGINEER Gurinderpal Bhullar No. C48815 Exp. 9-30-14 CIVIL STATE OF CALIFORNIA

THE STATE OF CALIFORNIA OR ITS OFFICERS OR AGENTS SHALL NOT BE RESPONSIBLE FOR THE ACCURACY OR COMPLETENESS OF SCANNED COPIES OF THIS PLAN SHEET.

NOTES:

See Revised Standard Plan RSP T9 for tables.

Use cone spacing X for taper segment, Y for tangent segment or Z for conflict situations, as approriate, per Table 1, unless X, Y, or Z cone spacing is shown on this sheet.

Unless otherwise specified in the special provisions, all temporary warning signs shall have black legend on fluorescent orange background.

California codes are designated by (CA). Otherwise, Federal (MUTCD) codes are shown.

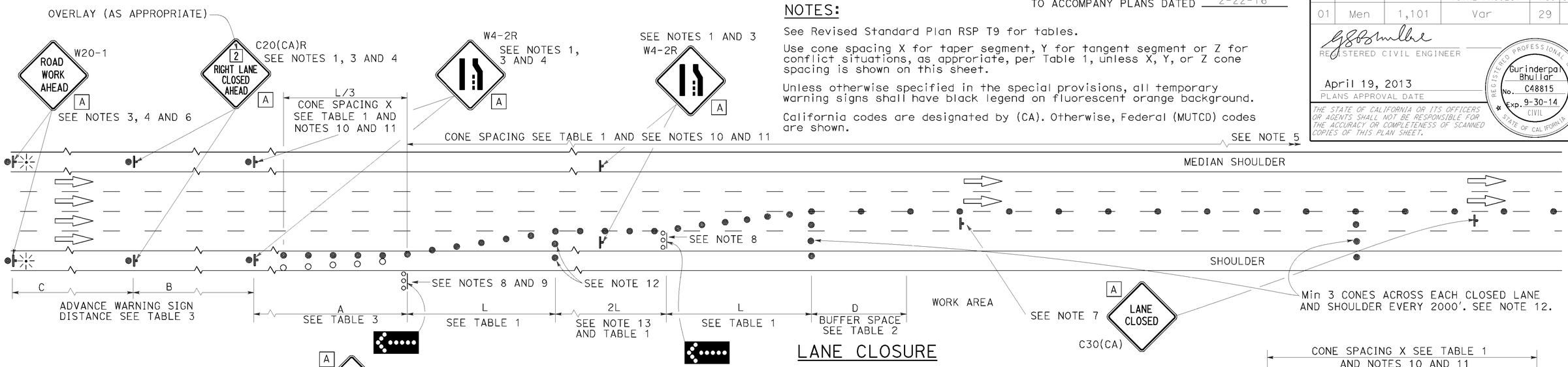

LANE CLOSURE

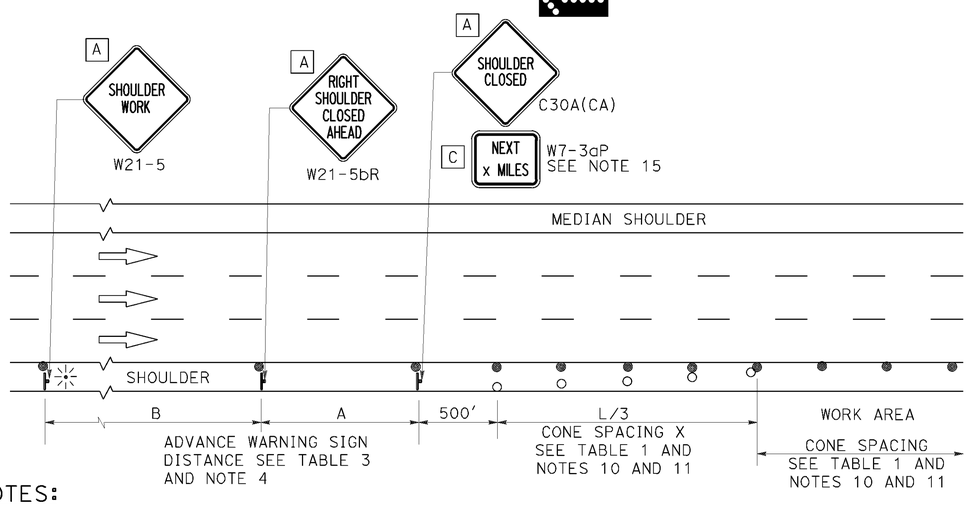

SHOULDER CLOSURE

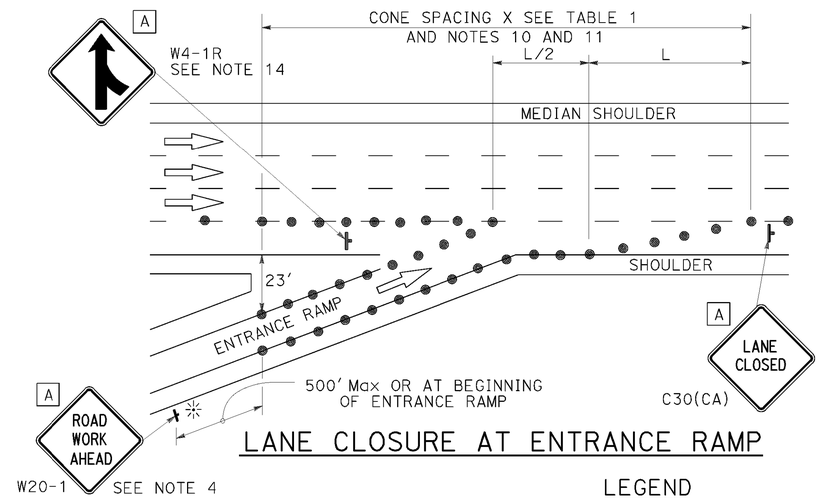

LANE CLOSURE AT ENTRANCE RAMP

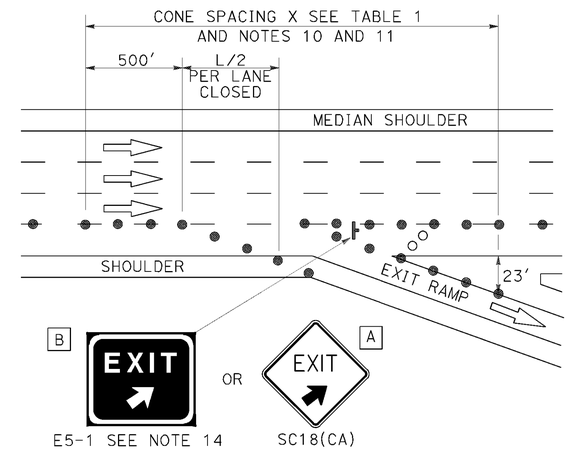

LANE CLOSURE AT EXIT RAMP

NOTES:

1. Median lane closures shall conform to the details as shown except that C20(CA)L and W4-2L signs shall be used.
2. At least one person shall be assigned to provide full time maintenance of traffic control devices for lane closures.
3. Duplicate sign installations are not required:
   a) On opposite shoulder if at least one-half of the available lanes remain open to traffic.
   b) In the median if the width of the median shoulder is less than 8' and the outside lanes are to be closed.
4. Each advance warning sign on each side of the roadway shall be equipped with at least two flags for daytime closure. Each flag shall be at least 16" x 16" in size and shall be orange or fluorescent red-orange in color. Flashing beacons shall be placed at the locations indicated for lane closure during hours of darkness.
5. A G20-2 "END ROAD WORK" sign, with minimum size of 48" x 24" as appropriate, shall be placed at the end of the lane closure unless the end of work area is obvious or ends within a larger project's limits.
6. If the W20-1 sign would follow within 2000' of a stationary W20-1 or G20-1 "ROAD WORK NEXT _____ MILES", use a C20(CA) sign for the first advance warning sign.
7. Place a C30(CA) sign every 2000' throughout length of lane closure.
8. One flashing arrow sign for each lane closed. The flashing arrow signs shall be Type I.
9. A minimum 1500' of sight distance shall be provided where possible for vehicles approaching the first flashing arrow sign. Lane closures shall not begin at top of crest vertical curve or on a horizontal curve.
10. All cones used for lane closures during the hours of darkness shall be fitted with retroreflective bands (or sleeves) as specified in the specifications.
11. Portable delineators, placed at one-half the spacing indicated for traffic cones may be used instead of cones for daytime closures only.
12. Unless otherwise specified in the special provisions, a minimum of 3 cones shall be placed transversely across each closed lane and shoulder at each location where a taper across a traffic lane ends and every 2000' as shown on the "Lane Closure" detail. Two Type II barricades may be used instead of the 3 cones. The transverse alignment of the cones or barricades on the closed shoulder may be shifted from the transverse alignment to provide access to the work.
13. Unless otherwise specified in the special provisions, the 2L tangent shown along lane lines shall be used between the L tapers required for each closed traffic lane.
14. Unless otherwise specified in the special provisions, the E5-1 or SC18(CA) and W4-1 signs shall be used as shown.
15. A W7-3aP "NEXT ___ MILES" plaque must be used if theshoulder closure extends beyond the distance that can be perceived by road users.

LEGEND

- TRAFFIC CONE
- TRAFFIC CONE (OPTIONAL TAPER)
- TEMPORARY TRAFFIC CONTROL SIGN
- FLASHING ARROW SIGN (FAS)
- FAS SUPPORT OR TRAILER
- PORTABLE FLASHING BEACON

SIGN PANEL SIZE (Min)

A	48" x 48"
B	72" x 60"
C	36" x 30"

STATE OF CALIFORNIA
DEPARTMENT OF TRANSPORTATION

TRAFFIC CONTROL SYSTEM FOR LANE CLOSURE ON FREEWAYS AND EXPRESSWAYS

NO SCALE

RSP T10 DATED APRIL 19, 2013 SUPERSEDES STANDARD PLAN T10 DATED MAY 20, 2011 - PAGE 237 OF THE STANDARD PLANS BOOK DATED 2010.

REVISED STANDARD PLAN RSP T10

2010 REVISED STANDARD PLAN RSP T10

P:\PROJ\01\0e580\drafting\sheets\va017.dgn

12-18-12

Dist	COUNTY	ROUTE	POST MILES TOTAL PROJECT	SHEET No.	TOTAL SHEETS
01	Men	1,101	Var	30	36

REGISTERED CIVIL ENGINEER

April 19, 2013
PLANS APPROVAL DATE

REGISTERED PROFESSIONAL ENGINEER Gurinderpal Bhullar No. C48815 Exp. 9-30-14 CIVIL STATE OF CALIFORNIA

THE STATE OF CALIFORNIA OR ITS OFFICERS OR AGENTS SHALL NOT BE RESPONSIBLE FOR THE ACCURACY OR COMPLETENESS OF SCANNED COPIES OF THIS PLAN SHEET.

TO ACCOMPANY PLANS DATED 2-22-16

TYPICAL RAMP CLOSURES

SIGN PANEL SIZE (Min)

- A 48" × 48"
- B 48" × 30"
- C 36" × 36"
- D 48" × 36"

LEGEND

- TRAFFIC CONE
- TEMPORARY TRAFFIC CONTROL SIGN
- BARRICADES
- PORTABLE FLASHING BEACON

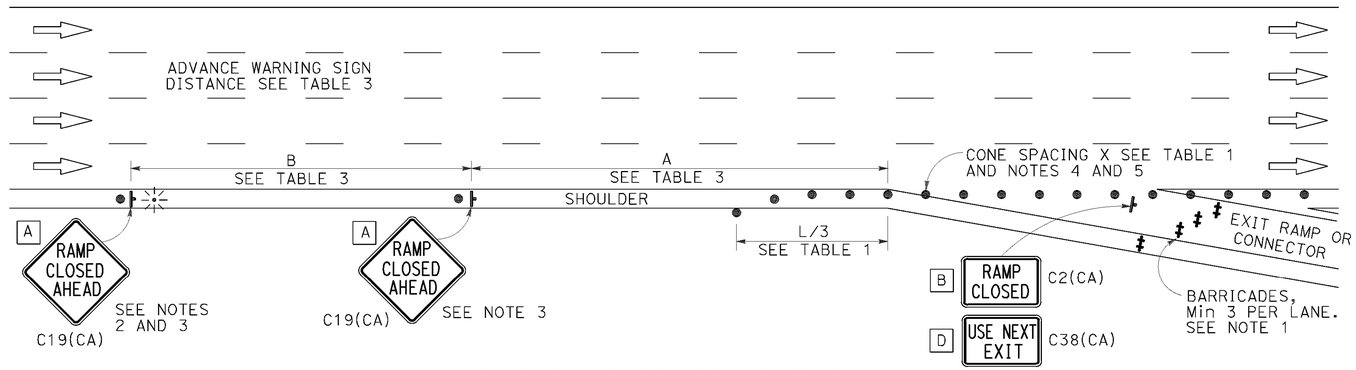

EXIT RAMP OR CONNECTOR

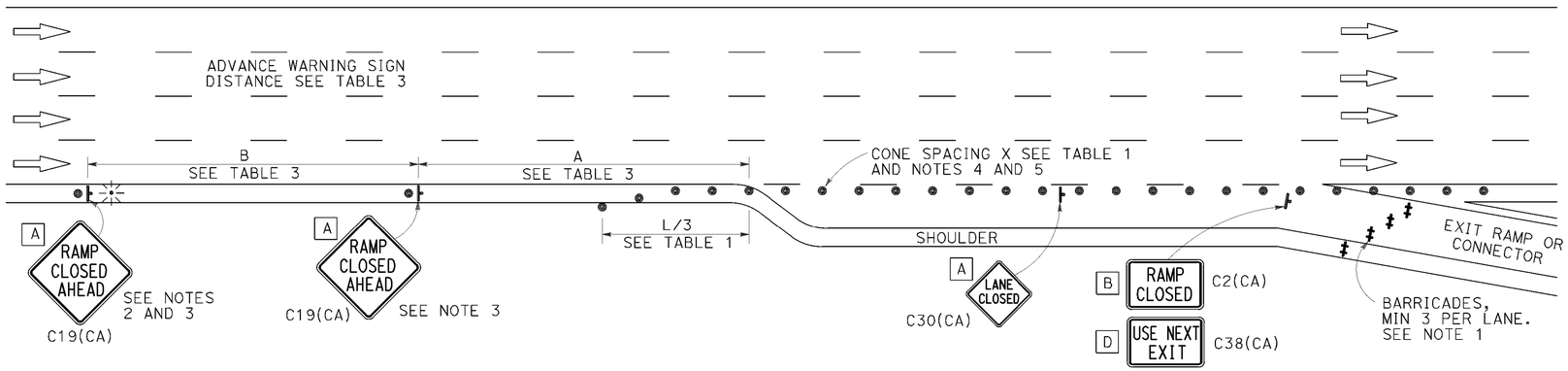

EXIT RAMP OR CONNECTOR WITH ADDITIONAL LANE

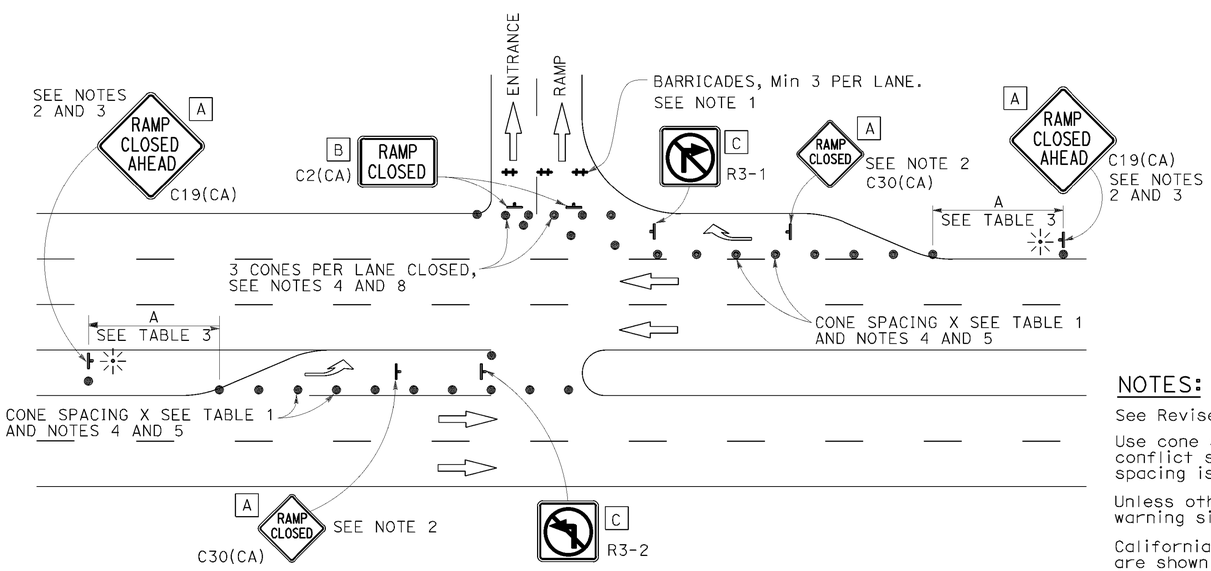

ENTRANCE RAMP WITH TURNING POCKETS

NOTES:

See Revised Standard Plan RSP T9 for tables.

Use cone spacing X for taper segment, Y for tangent segment or Z for conflict situations, as approriate, per Table 1, unless X, Y, or Z cone spacing is shown on this sheet.

Unless otherwise specified in the special provisions, all temporary warning signs shall have black legend on fluorescent orange background.

California codes are designated by (CA). Otherwise, Federal (MUTCD) codes are shown.

NOTES:

1. Barricades shall be Type I, II, or III for closures lasting one week or less and Type III for closures lasting longer than one week.
2. In addition to placing the C19(CA) "RAMP CLOSED AHEAD" and C30(CA) "RAMP CLOSED" signs, black on orange overlay plates with the word "CLOSED" may be mounted, as directed by the Engineer, on all guide signs that refer to the closed ramp. The letter size on the overlay shall be the same as the guide sign.
3. Each advance C19(CA) "RAMP CLOSED AHEAD" sign shall be equipped with at least two flags for daytime closure. Each flag shall be at least 16" × 16" in size and shall be orange or fluorescent red-orange in color. A flashing beacon shall be placed on top of the first C19(CA) sign during hours of darkness.
4. All cones used for ramp closures during the hours of darkness shall be fitted with retroreflective bands (or sleeves) as specified in the specifications.
5. Portable delineators, placed at one-half the spacing indicated for traffic cones, may be used instead of cones for daytime ramp closures only.
6. At least one person shall be assigned to provide full time maintenance of traffic control devices, unless otherwise directed by the Engineer.
7. The existing "EXIT" signs shall be covered during ramp closures.
8. A minimum of 3 cones shall be placed transversely across each closed lane and shoulder.

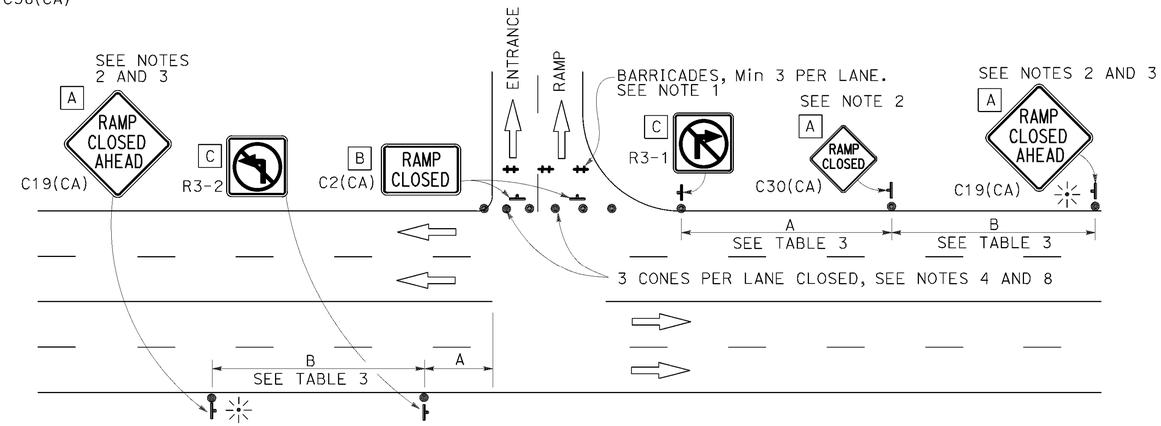

ENTRANCE RAMP WITHOUT TURNING POCKETS

STATE OF CALIFORNIA
DEPARTMENT OF TRANSPORTATION

TRAFFIC CONTROL SYSTEM FOR RAMP CLOSURE

NO SCALE

RSP T14 DATED APRIL 19, 2013 SUPERSEDES STANDARD PLAN T14
DATED MAY 20, 2011 - PAGE 242 OF THE STANDARD PLANS BOOK DATED 2010.

REVISED STANDARD PLAN RSP T14

2010 REVISED STANDARD PLAN RSP T14

P:\PROJ\01\06580\drafting\sheets\va018.dgn

12-18-12

DIST	COUNTY	ROUTE	POST MILES TOTAL PROJECT	SHEET No	TOTAL SHEETS
01	Men	1,101	Var	31	36

REGISTERED CIVIL ENGINEER 1-11-16 DATE

February 22, 2016
PLANS APPROVAL DATE

REGISTERED PROFESSIONAL ENGINEER A. KUSHKAKI No. 59045 Exp. 6-30-17 CIVIL STATE OF CALIFORNIA

The State of California or its officers or agents shall not be responsible for the accuracy or completeness of electronic copies of this plan sheet.

To get to the Caltrans web site, go to: http://www.dot.ca.gov

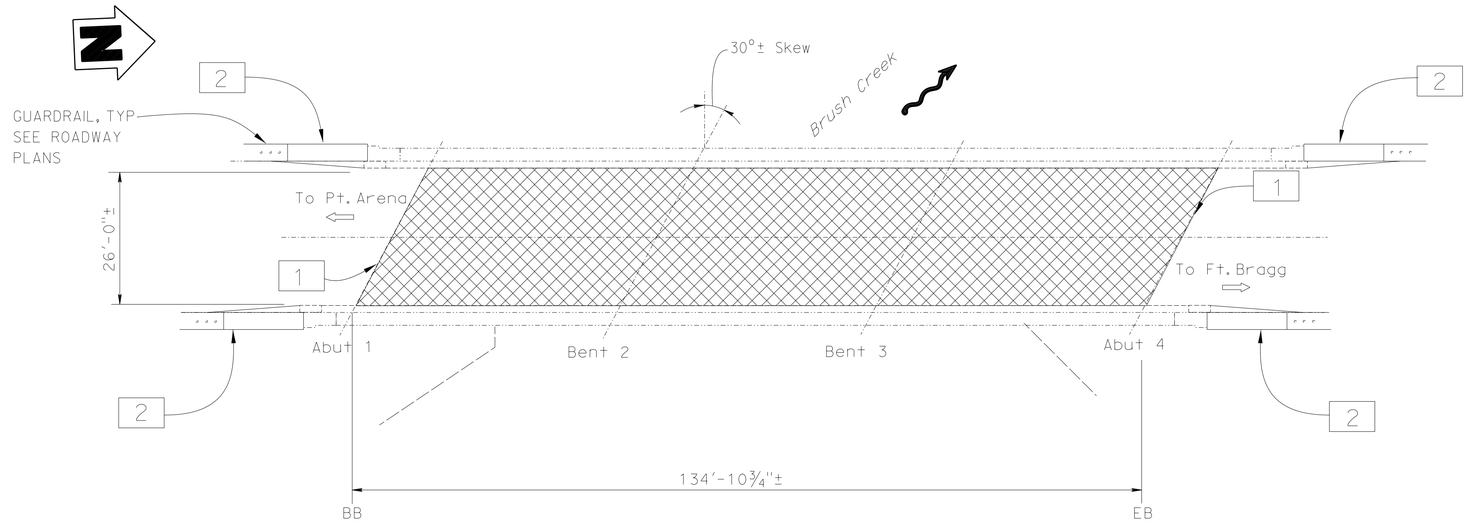

1 BRUSH CREEK

Br. No. 10-0115, Men Rte 1, PM 20.83
NO SCALE

BRUSH CREEK — BRIDGE NO. 10-0115

QUANTITIES

RAPID SETTING CONCRETE (PATCH)	9	CF
REMOVE ASPHALT CONCRETE SURFACING	3,510	SQFT
REMOVE UNSOUND CONCRETE	9	CF
PREPARE CONCRETE BRIDGE DECK SURFACE	3,510	SQFT
FURNISH POLYESTER CONCRETE OVERLAY	585	CF
PLACE POLYESTER CONCRETE OVERLAY	3,510	SQFT
CONCRETE BARRIER (TRANSITION)	87	LF

COMMINSKY SIDEHILL VIADUCT — BRIDGE NO. 10-0268

QUANTITIES

CLEAN EXPANSION JOINT	40	LF
JOINT SEAL (MR 1")	40	LF

STANDARD PLANS DATED 2010

SHEET No.	TITLE
A10A	ABBREVIATIONS (SHEET 1 OF 2)
RSP A10B	ABBREVIATIONS (SHEET 2 OF 2)
RSP B6-21	JOINT SEALS (MAXIMUM MOVEMENT RATING=2")
RSP A77U1	MIDWEST GUARDRAIL SYSTEM CONNECTIONS TO BRIDGE RAILINGS WITHOUT SIDEWALKS DETAILS No. 1
RSP A77U2	MIDWEST GUARDRAIL SYSTEM CONNECTIONS TO BRIDGE RAILINGS WITHOUT SIDEWALKS DETAILS No. 2
RSP A77U4	MIDWEST GUARDRAIL STSTEM TRANSITION RAILING (TYPE WB-31)

SHEET No.	TITLE
1	GENERAL PLAN 1
2	GENERAL PLAN 2
3	GENERAL PLAN 3
4	GENERAL PLAN 4
5	JOINT SEAL TABLE AND DECK REPAIR DETAILS
6	CONCRETE BARRIER TRANSITION.

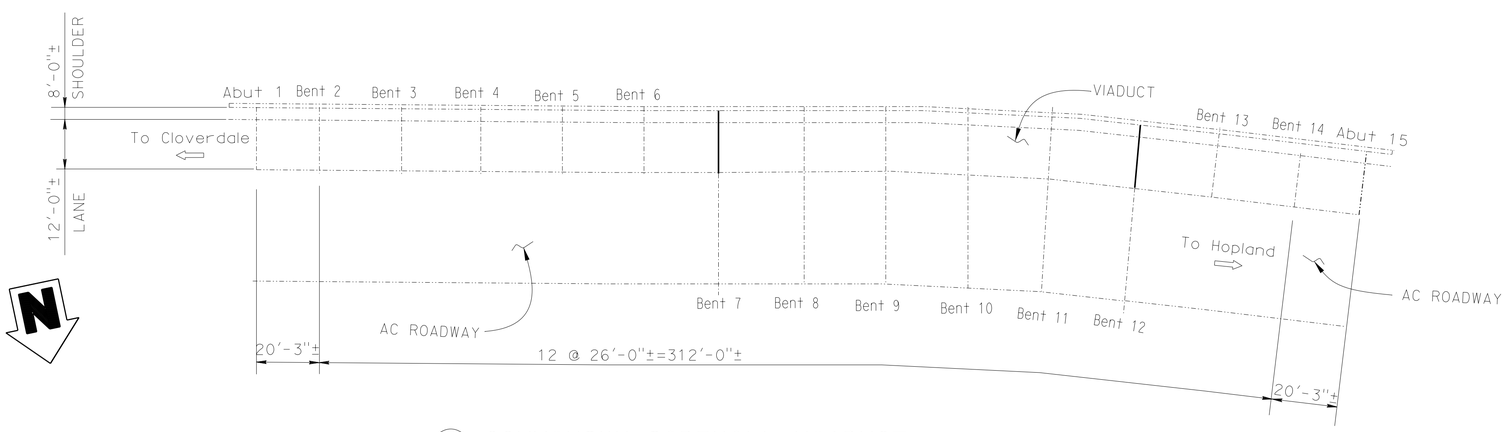

2 COMMINSKY SIDEHILL VIADUCT

Br. No. 10-0268, MEN Rte 101, PM 2.47
NO SCALE

LEGEND:

INDICATES EXISTING STRUCTURE

INDICATES LOCATION OF CLEAN EXISTING EXPANSION JOINT AND INSTALL NEW JOINT SEAL. FOR DETAILS, SEE "JOINT SEAL TABLE AND DETAILS" SHEET.

INDICATES LIMIT OF REMOVE ± 2" AC OVERLAY, PREPARE CONCRETE BRIDGE DECK SURFACE, AND PLACE 2" POLYESTER CONCRETE OVERLAY. PRIOR TO PLACING POLYESTER CONCRETE OVERLAY, REPAIR UNSOUND CONCRETE, FOR DETAILS, SEE "JOINT SEAL TABLE AND DECK REPAIR DETAILS" SHEET.

1 FOR CONFORM DETAIL, SEE ROADWAY PLAN

2 FOR CONCRETE BARRIER (TRANSITION) AND EXISTING CURB REMOVAL DETAILS, SEE "CONCRETE BARRIER TRANSITIONS" SHEET.

NOTE:
CONTRACTOR MUST VERIFY ALL CONTROLLING FIELD DIMENSIONS BEFORE ORDERING OR FABRICATING ANY MATERIAL.

REPLACE JOINT SEAL & TREAT BRIDGE DECK

BRUSH CREEK & COMMINSKY SIDEHILL VIADUCT

GENERAL PLAN 1

Hongyuan Su
DESIGN ENGINEER 01-11-16

	BY	CHECKED			
DESIGN	A.Kushkaki	C. Lee / N.Quiroz	LOAD FACTOR DESIGN	LIVE LOADING: HS20-44 AND ALTERNATIVE AND PERMIT DESIGN LOAD	
DETAILS	M. Yu	A.Kushkaki / N.Quiroz	LAYOUT	M. Yu	A.Kushkaki
QUANTITIES	A.Kushkaki	C. Lee	SPECIFICATIONS		PLANS AND SPECS COMPARED

STATE OF CALIFORNIA
DEPARTMENT OF TRANSPORTATION

DIVISION OF MAINTENANCE
STRUCTURE MAINTENANCE AND INVESTIGATIONS

BRIDGE NO. 10-0115 10-0268
POST MILE 20.83 2.47

STRUCTURES DESIGN GENERAL PLAN SHEET (ENGLISH) (REV. 10/25/05)

ORIGINAL SCALE IN INCHES FOR REDUCED PLANS 0 1 2 3

CU 3846
PROJECT NUMBER & PHASE: 0114000103

CONTRACT NO.: 01-0E5801

DISREGARD PRINTS BEARING EARLIER REVISION DATES

REVISION DATES 5-20-15 8-5-15 1-5-16

SHEET 1 OF 6

FILE => P:\PROJ\01\0e580\drafting\sheets\za001.dgn

USERNAME => s120115 DATE PLOTTED => 25-FEB-2016 TIME PLOTTED => 07:32

DIST	COUNTY	ROUTE	POST MILES TOTAL PROJECT	SHEET No	TOTAL SHEETS
01	Men	1,101	Var	32	36

REGISTERED CIVIL ENGINEER 1-11-16 DATE

February 22, 2016
PLANS APPROVAL DATE

REGISTERED PROFESSIONAL ENGINEER A. KUSHKAKI No. 59045 Exp. 6-30-17 CIVIL STATE OF CALIFORNIA

The State of California or its officers or agents shall not be responsible for the accuracy or completeness of electronic copies of this plan sheet.

To get to the Caltrans web site, go to: http://www.dot.ca.gov

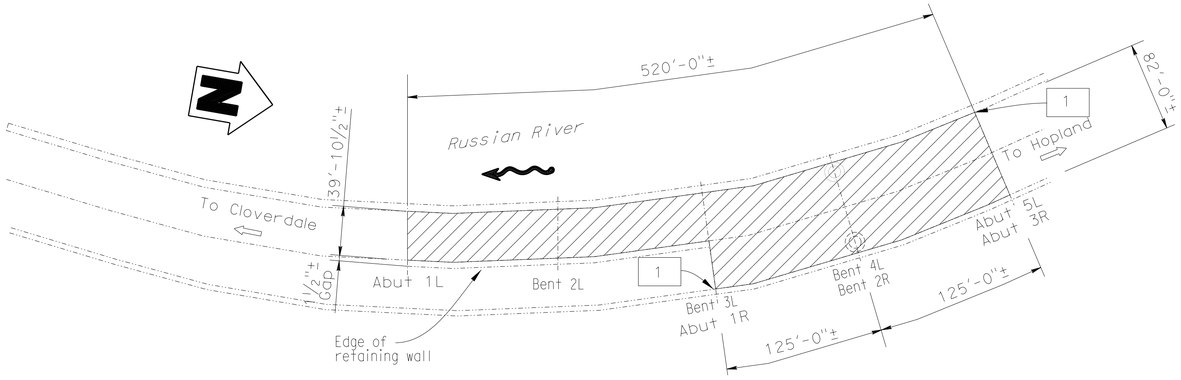

③ FROG WOMAN ROCK SHV
Br. No. 10-0289, Men Rte 101, PM 4.95
NO SCALE

LEGEND:

INDICATES EXISTING STRUCTURE

INDICATES LOCATION OF CLEAN EXPANSION JOINT AND PLACE NEW JOINT SEAL. FOR DETAILS, SEE "JOINT SEAL TABLE AND DECK REPAIR DETAILS" SHEET.

INDICATES LIMITS OF PREPARE CONCRETE BRIDGE DECK AND TREAT BRIDGE DECK WITH HIGH MOLECULAR WEIGHT METHACRYLATE.

1 — PAINT "FROG WOMAN ROCK SHV"
PAINT "Br. No. 10-0289"

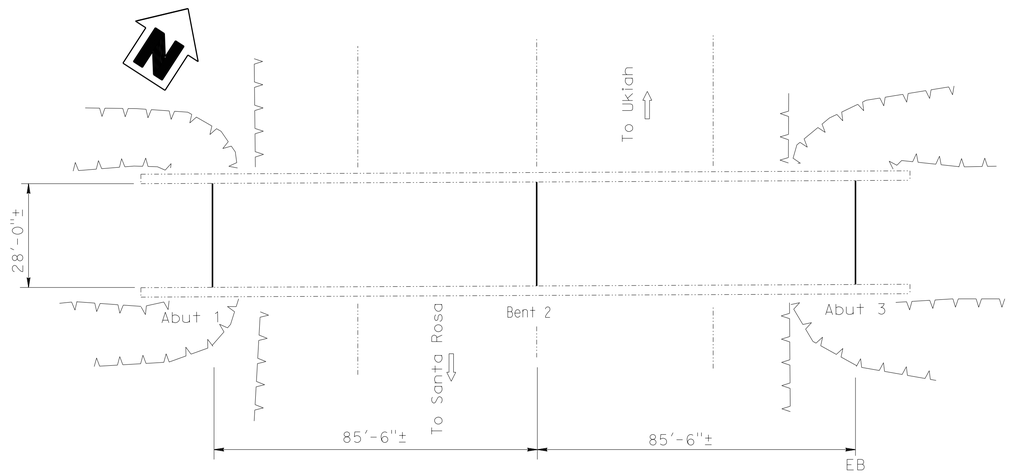

④ ROBINSON OC
Br. No. 10-0086, Men Rte 101, PM 20.71
NO SCALE

FROG WOMAN ROCK SHV — BRIDGE NO. 10-0289

QUANTITIES

PAINT BRIDGE IDENTIFICATION	2	EA
PREPARE CONCRETE BRIDGE DECK SURFACE	31,266	SQFT
TREAT BRIDGE DECK	31,266	SQFT
FURNISH BRIDGE DECK TREATMENT MATERIAL	347	GAL

ROBINSON OC — BRIDGE NO. 10-0086

QUANTITIES

CLEAN EXPANSION JOINT	84	LF
JOINT SEAL (MR 1/2")	56	LF
JOINT SEAL (MR 1")	28	LF

NOTE:
CONTRACTOR MUST VERIFY ALL CONTROLLING FIELD DIMENSIONS BEFORE ORDERING OR FABRICATING ANY MATERIAL.

Hongyuan Su
DESIGN ENGINEER 01-11-16

	BY	CHECKED			
DESIGN	A.Kushkaki	C. Lee	LOAD FACTOR DESIGN	LIVE LOADING: HS20-44 AND ALTERNATIVE AND PERMIT DESIGN LOAD	
DETAILS	M. Yu	A.Kushkaki	LAYOUT	M. Yu	A.Kushkaki
QUANTITIES	A.Kushkaki	C. Lee	SPECIFICATIONS		PLANS AND SPECS COMPARED

STATE OF CALIFORNIA
DEPARTMENT OF TRANSPORTATION

DIVISION OF MAINTENANCE
STRUCTURE MAINTENANCE AND INVESTIGATIONS

BRIDGE NO. 10-0289 10-0086
POST MILE 4.95 20.71

REPLACE JOINT SEAL & TREAT BRIDGE DECK
FROG WOMAN ROCK SHV & ROBINSON OC
GENERAL PLAN 2

STRUCTURES DESIGN GENERAL PLAN SHEET (ENGLISH) (REV. 10/25/05)

ORIGINAL SCALE IN INCHES FOR REDUCED PLANS 0 1 2 3

CU 3846
PROJECT NUMBER & PHASE: 0114000103
CONTRACT NO.: 01-0E5801

DISREGARD PRINTS BEARING EARLIER REVISION DATES

REVISION DATES				SHEET	OF
1-19-16	8-21-15	1-5-16	2-9-16	2	6

FILE => P:\PROJ\01\0e580\drafting\sheets\za002.dgn

USERNAME => s120115 DATE PLOTTED => 25-FEB-2016 TIME PLOTTED => 07:32

DIST	COUNTY	ROUTE	POST MILES TOTAL PROJECT	SHEET No	TOTAL SHEETS
01	Men	1,101	Var	33	36

REGISTERED CIVIL ENGINEER — DATE 1-11-16

February 22, 2016
PLANS APPROVAL DATE

REGISTERED PROFESSIONAL ENGINEER — A. KUSHKAKI — No. 59045 — Exp. 6-30-17 — CIVIL — STATE OF CALIFORNIA

The State of California or its officers or agents shall not be responsible for the accuracy or completeness of electronic copies of this plan sheet.

To get to the Caltrans web site, go to: http://www.dot.ca.gov

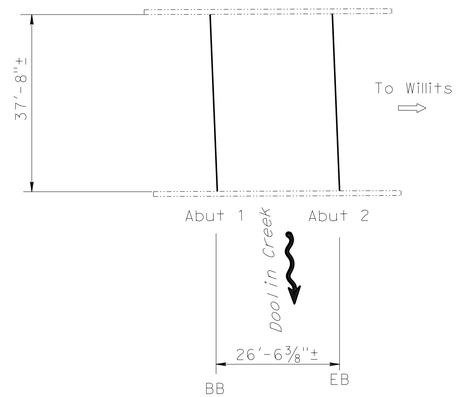

5 DOOLIN CREEK
Br. No. 10-0190R MEN Rte 101, PM R23.59
NO SCALE

LEGEND:

INDICATES EXISTING STRUCTURE

INDICATES LOCATION OF CLEAN EXPANSION JOINT AND PLACE NEW JOINT SEAL. FOR DETAILS, SEE "JOINT SEAL TABLE AND DECK REPAIR DETAILS" SHEET.

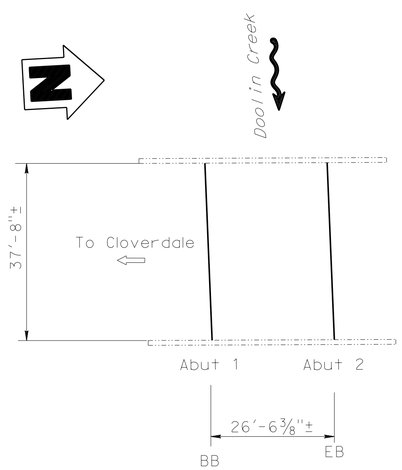

6 DOOLIN CREEK
Br. No. 10-0190L MEN Rte 101, PM R23.59
NO SCALE

DOOLIN CREEK — BRIDGE NO. 10-0190R

QUANTITIES

CLEAN EXPANSION JOINT	76	LF
JOINT SEAL (MR 1/2")	76	LF

DOOLIN CREEK — BRIDGE NO. 10-0190L

QUANTITIES

CLEAN EXPANSION JOINT	76	LF
JOINT SEAL (MR 1/2")	76	LF

NOTE:
CONTRACTOR MUST VERIFY ALL CONTROLLING FIELD DIMENSIONS BEFORE ORDERING OR FABRICATING ANY MATERIAL.

Hongyuan Su
DESIGN ENGINEER 01-11-16

	BY	CHECKED			
DESIGN	A.Kushkaki	C. Lee	LOAD FACTOR DESIGN	LIVE LOADING: HS20-44 AND ALTERNATIVE AND PERMIT DESIGN LOAD	
DETAILS	M. Yu	A.Kushkaki	LAYOUT	M. Yu	A.Kushkaki
QUANTITIES	A.Kushkaki	C. Lee	SPECIFICATIONS		PLANS AND SPECS COMPARED

STATE OF CALIFORNIA
DEPARTMENT OF TRANSPORTATION

DIVISION OF MAINTENANCE
STRUCTURE MAINTENANCE AND INVESTIGATIONS

BRIDGE NO. 10-0190L/R
POST MILE R23.59

REPLACE JOINT SEAL & TREAT BRIDGE DECK
DOOLIN CREEK
GENERAL PLAN 3

STRUCTURES DESIGN GENERAL PLAN SHEET (ENGLISH) (REV. 10/25/05)

ORIGINAL SCALE IN INCHES FOR REDUCED PLANS 0 1 2 3

CU 3846
PROJECT NUMBER & PHASE: 0114000103

CONTRACT NO.: 01-0E5801

DISREGARD PRINTS BEARING EARLIER REVISION DATES

REVISION DATES				SHEET	OF
5-20-15	8-5-15	1-5-16		3	6

FILE => P:\PROJ\01\0e580\drafting\sheets\za003.dgn

USERNAME => s120115 DATE PLOTTED => 25-FEB-2016 TIME PLOTTED => 07:32

DIST	COUNTY	ROUTE	POST MILES TOTAL PROJECT	SHEET No	TOTAL SHEETS
01	Men	1,101	Var	34	36

REGISTERED CIVIL ENGINEER 1-11-16 DATE

February 22, 2016
PLANS APPROVAL DATE

REGISTERED PROFESSIONAL ENGINEER A. KUSHKAKI No. 59045 Exp. 6-30-17 CIVIL STATE OF CALIFORNIA

The State of California or its officers or agents shall not be responsible for the accuracy or completeness of electronic copies of this plan sheet.

To get to the Caltrans web site, go to: http://www.dot.ca.gov

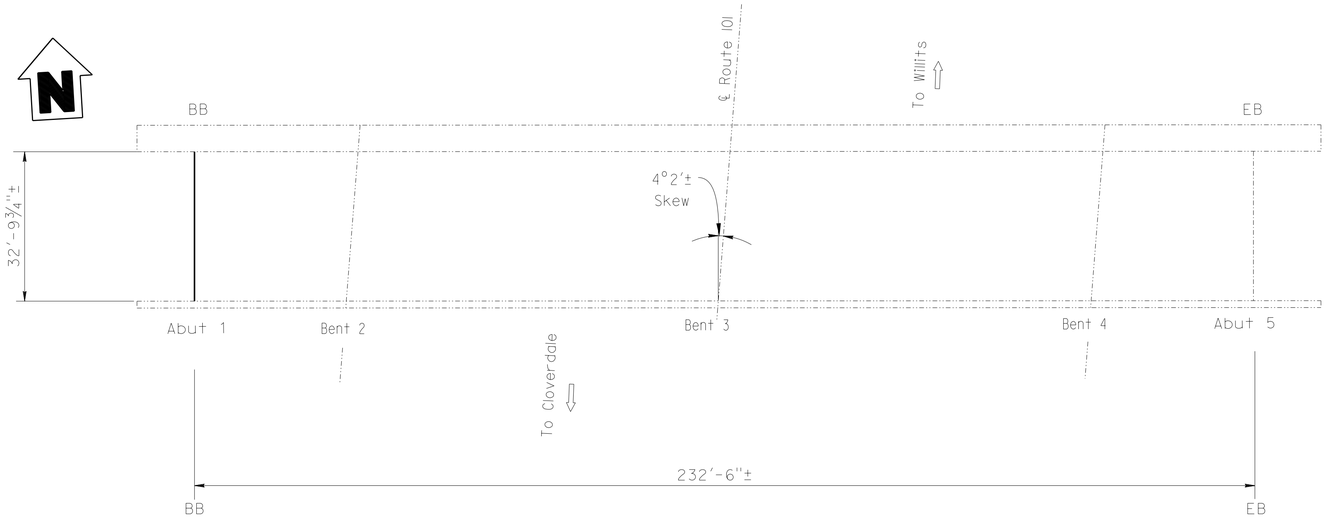

7 GOBBI STREET OC
Br. No. 10-0191 Men Rte 101, PM R24.06
NO SCALE

LEGEND:

INDICATES EXISTING STRUCTURE

INDICATES LOCATION OF CLEAN EXPANSION JOINT AND PLACE NEW JOINT SEAL. FOR DETAILS, SEE "JOINT SEAL TABLE AND DECK REPAIR DETAILS" SHEET.

GOBBI STREET OC BRIDGE NO. 10-0191

QUANTITIES

CLEAN EXPANSION JOINT	33	LF
JOINT SEAL (MR 1")	33	LF

NORTH STATE STREET UC BRIDGE NO. 10-0196L

QUANTITIES

CLEAN EXPANSION JOINT	62	LF
JOINT SEAL (MR 1")	62	LF

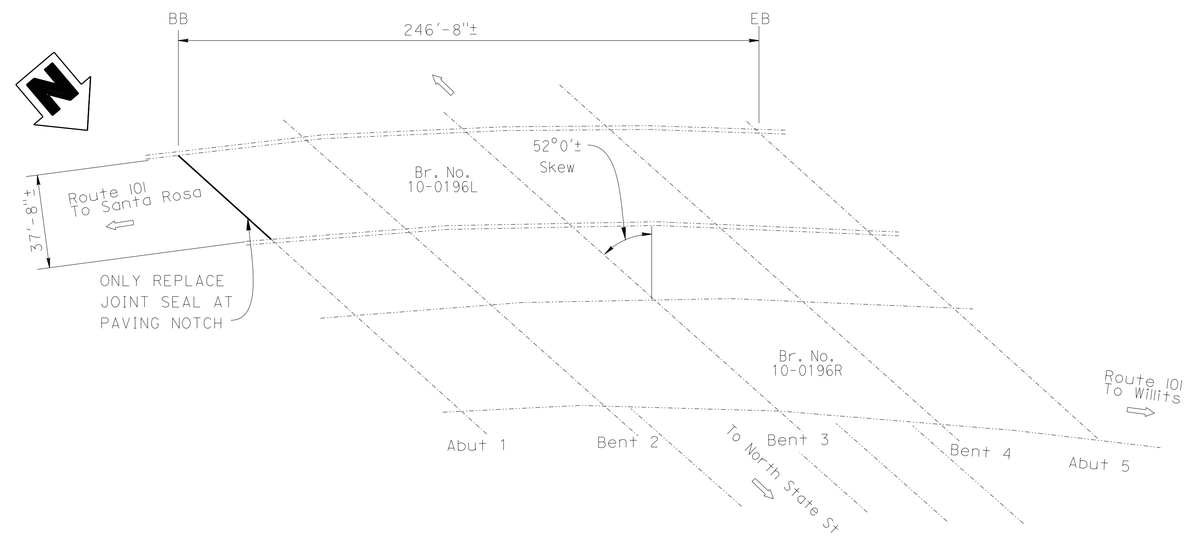

8 NORTH STATE STREET UNDERCROSSING
Br. No. 10-0196L Men Rte 101, PM R26.16
NO SCALE

NOTE:
CONTRACTOR MUST VERIFY ALL CONTROLLING FIELD DIMENSIONS BEFORE ORDERING OR FABRICATING ANY MATERIAL.

Hongyuan Su
DESIGN ENGINEER 01-11-16

	BY	CHECKED			
DESIGN	A.Kushkaki	C. Lee	LOAD FACTOR DESIGN	LIVE LOADING: HS20-44 AND ALTERNATIVE AND PERMIT DESIGN LOAD	
DETAILS	M. Yu	A.Kushkaki	LAYOUT	M. Yu	A.Kushkaki
QUANTITIES	A.Kushkaki	C. Lee	SPECIFICATIONS		PLANS AND SPECS COMPARED

STATE OF CALIFORNIA
DEPARTMENT OF TRANSPORTATION

DIVISION OF MAINTENANCE
STRUCTURE MAINTENANCE AND INVESTIGATIONS

BRIDGE NO. 10-0191 10-0196L
POST MILE R24.06 R26.16

REPLACE JOINT SEAL & TREAT BRIDGE DECK
GOBBI STREET OC & NORTH STATE STREET UC
GENERAL PLAN 4

STRUCTURES DESIGN GENERAL PLAN SHEET (ENGLISH) (REV. 10/25/05)

ORIGINAL SCALE IN INCHES FOR REDUCED PLANS 0 1 2 3

CU 3846
PROJECT NUMBER & PHASE: 0114000103

CONTRACT NO.: 01-0E5801

DISREGARD PRINTS BEARING EARLIER REVISION DATES

REVISION DATES				SHEET	OF
5-20-15	8-5-15	1-5-16		4	6

FILE => P:\PROJ\01\0e580\drafting\sheets\za004.dgn

USERNAME => s120115 DATE PLOTTED => 25-FEB-2016 TIME PLOTTED => 07:32

DIST	COUNTY	ROUTE	POST MILES TOTAL PROJECT	SHEET No	TOTAL SHEETS
01	Men	1,101	Var	35	36

REGISTERED CIVIL ENGINEER 1-11-16 DATE

February 22, 2016
PLANS APPROVAL DATE

REGISTERED PROFESSIONAL ENGINEER A. KUSHKAKI No. 59045 Exp. 6-30-17 CIVIL STATE OF CALIFORNIA

The State of California or its officers or agents shall not be responsible for the accuracy or completeness of electronic copies of this plan sheet.

To get to the Caltrans web site, go to: http://www.dot.ca.gov

JOINT SEAL TABLE

INDEX	BRIDGE NUMBER	JOINT LOCATION	MINIMUM "MR" (INCHES)	APPROXIMATE LENGTH (FEET)	EXISTING WATERSTOP	APPROXIMATE DEPTH TO CLEAN Exp JOINT (INCHES)
2	10-0268	Bent 7	1	20	yes	12
		Bent 12	1	20	yes	12
4	10-0086	Abut 1	1/2	28	yes	14
		Abut 3	1/2	28	yes	14
		Bent 2	1	28	yes	14
5	10-0190R	Abut 1	1/2	38	no	12
		Abut 2	1/2	38	no	12
6	10-0190L	Abut 1	1/2	38	yes	12
		Abut 2	1/2	38	yes	12
7	10-0191	Abut 1	1	33	yes	12
8	10-0196L	Abut 1	1	62	yes	8

DECK REPAIR TABLE REMOVE UNSOUND CONCRETE AND RAPID SETTING CONCRETE (PATCH)

BRIDGE NAME	BRIDGE NUMBER	APPROXIMATE AREA DAMAGED (PERCENT)	APPROXIMATE DEPTH (INCHES)	APPROXIMATE AREA (SF)
BRUSH CREEK	10-0115	1	3	3,510

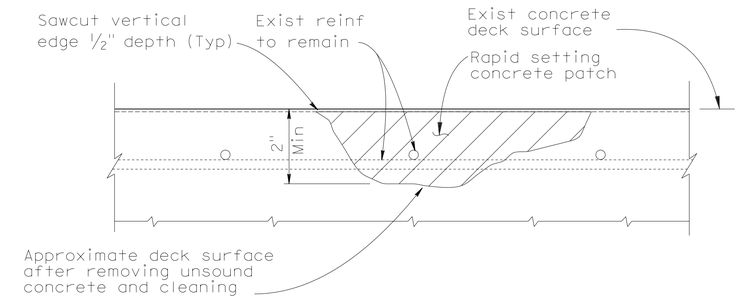

DECK/APPROACH SLAB REPAIR DETAIL - NO OVERLAY

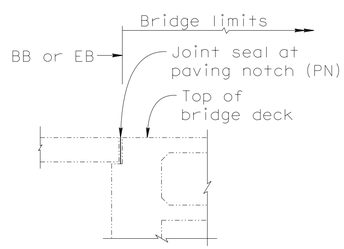

END DIAPHRAGM ABUTMENT

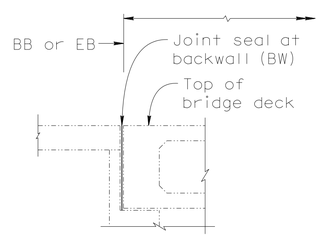

SEAT TYPE ABUTMENT

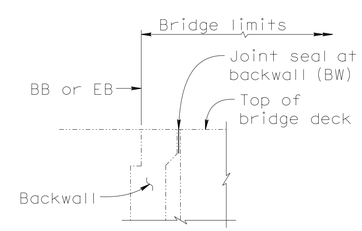

ABUTMENT WITH BACKWALL

JOINT SEAL LOCATION

No Scale

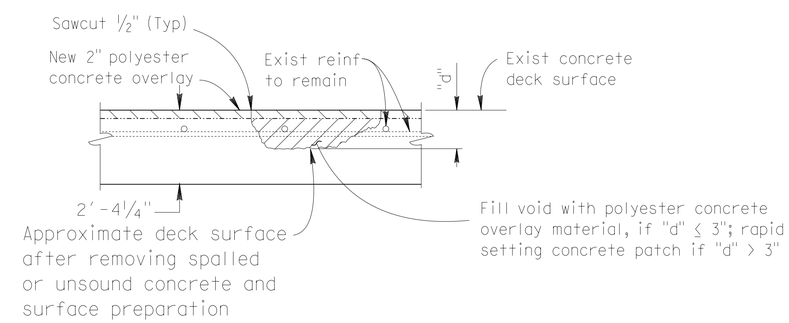

PARTIAL DECK DAMAGE REPAIR DETAIL- WITH OVERLAY

Location will be determined by the Engineer

NOTE:
CONTRACTOR MUST VERIFY ALL CONTROLLING FIELD DIMENSIONS BEFORE ORDERING OR FABRICATING ANY MATERIAL.

	BY	CHECKED
DESIGN	A.Kushkaki	C.Lee
DETAILS	M. Yu	A.Kushkaki
QUANTITIES	A.Kushkaki	C.Lee

STATE OF CALIFORNIA
DEPARTMENT OF TRANSPORTATION

DIVISION OF MAINTENANCE
STRUCTURE MAINTENANCE AND INVESTIGATIONS

BRIDGE NO. Var
POST MILE Var

REPLACE JOINT SEAL AND TREAT BRIDGE DECK
JOINT SEAL TABLE & DECK REPAIR DETAILS

STRUCTURES DESIGN DETAIL SHEET (ENGLISH) (REV. 10/25/05)

ORIGINAL SCALE IN INCHES FOR REDUCED PLANS 0 1 2 3

UNIT: 3486
PROJECT NUMBER & PHASE: 0114000103

CONTRACT NO.: 01-0E5801

DISREGARD PRINTS BEARING EARLIER REVISION DATES 6-2-15 8-5-15 1-5-16

SHEET 5 OF 6

FILE => za005.dgn

USERNAME => s120115 DATE PLOTTED => 25-FEB-2016 TIME PLOTTED => 07:32

DIST	COUNTY	ROUTE	POST MILES TOTAL PROJECT	SHEET No.	TOTAL SHEETS
01	Men	1,101	Var	36	36

REGISTERED CIVIL ENGINEER — DATE 1-07-16

February 22, 2016
PLANS APPROVAL DATE

REGISTERED PROFESSIONAL ENGINEER RICHARD LANCE WARREN No. C78431 Exp. 9/30/15 CIVIL STATE OF CALIFORNIA

The State of California or its officers or agents shall not be responsible for the accuracy or completeness of electronic copies of this plan sheet.

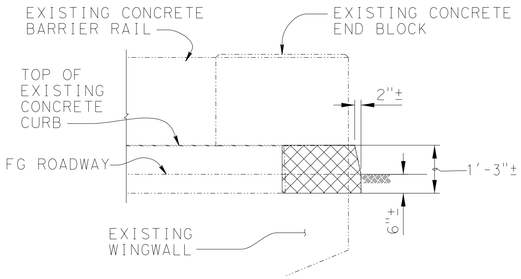

ELEVATION

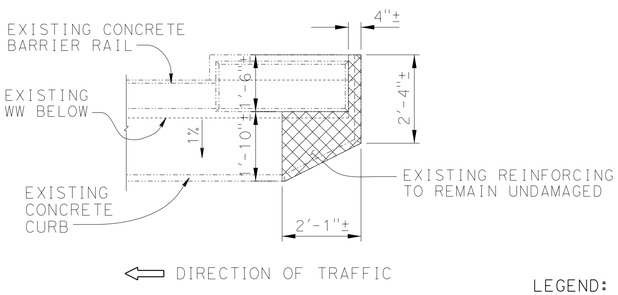

PLAN

CONCRETE REMOVAL
½" = 1'-0"

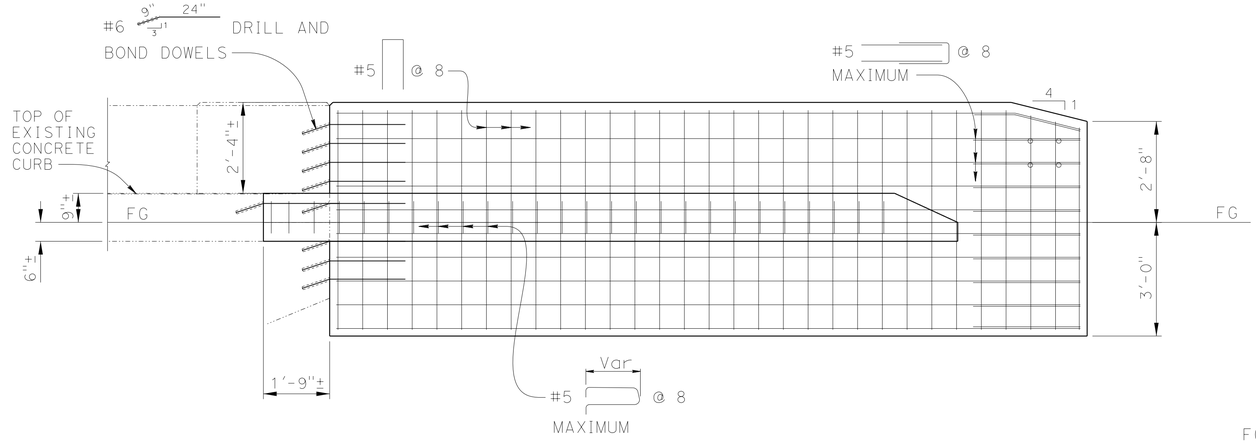

ELEVATION
½" = 1'-0"

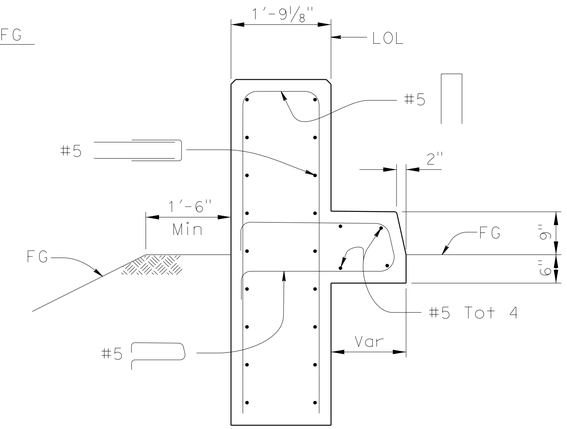

SECTION B-B
¾" = 1'-0"

LEGEND:

- Indicates existing structure
- Indicates new structure
- Bridge removal (portion)

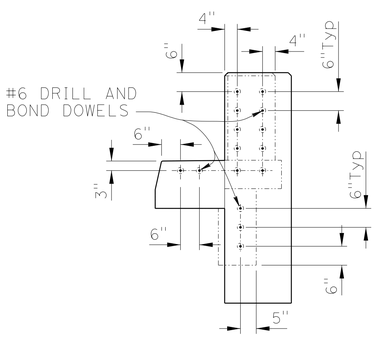

SECTION A-A
½" = 1'-0"

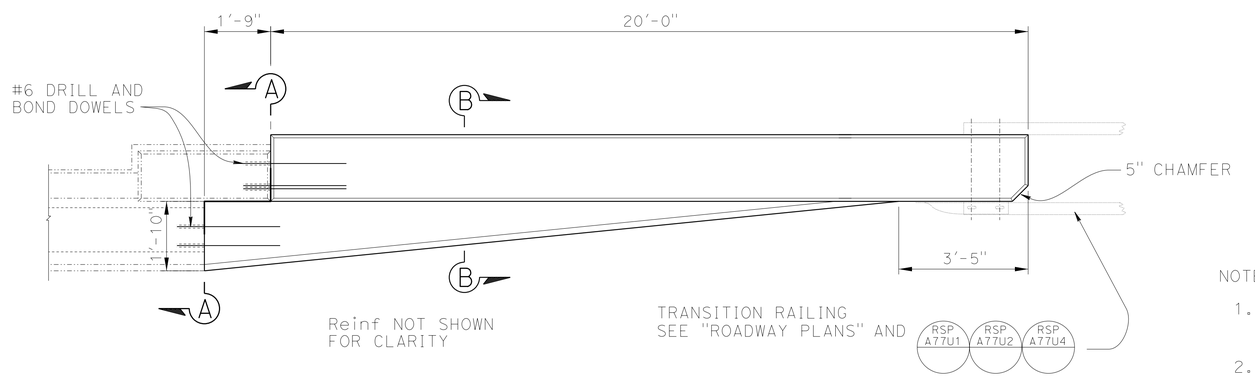

PLAN
½" = 1'-0"

NOTE:
The contractor must verify all controlling field dimensions before ordering or fabricating any material.

NOTES:

1. For location of barrier transitions, see "Roadway Plans"
2. Existing Barrier heights may vary, where existing barrier height is more or less than 2'-8", transition barrier height to 2'-8" @ 4:1 slope.
3. Holes used for fastening existing MBGR shall be mortar filled unless holes were cast using pipe sleeves.
4. Approach Concrete Barrier Rail Transition shown, Departure Concrete Barrier Rail Transition similar.

	BY	CHECKED
DESIGN	N QUIROZ	L WARREN
DETAILS	P WELLS	N QUIROZ
QUANTITIES	N QUIROZ	M Bruce

STATE OF CALIFORNIA
DEPARTMENT OF TRANSPORTATION

DIVISION OF ENGINEERING SERVICES
DESIGN AND TECHNICAL SERVICES
SPECIAL DESIGNS BRANCH B

BRIDGE NO. 10-0115
POST MILE 20.83

CONCRETE BARRIER TRANSITION
BARRIER DETAILS

(ENGLISH) SPECIAL DESIGNS BRANCH BORDER SHEET (REV. 8-12-2015)

ORIGINAL SCALE IN INCHES FOR REDUCED PLANS 0 1 2 3

UNIT: 3619
PROJECT NUMBER & PHASE: 0114000103
CONTRACT NO.: 01-0E5801

DISREGARD PRINTS BEARING EARLIER REVISION DATES
REVISION DATES 9-12-15 01-07-16
SHEET 6 OF 6

FILE => za006.dgn

USERNAME => s120115 DATE PLOTTED => 25-FEB-2016 TIME PLOTTED => 07:33