Dist	COUNTY	ROUTE	POST MILES TOTAL PROJECT	SHEET No.	TOTAL SHEETS
01	DN	101	35.7/39.9	1	25

INDEX OF PLANS

SHEET No.	DESCRIPTION
1	TITLE AND LOCATION MAP
2	TYPICAL CROSS SECTIONS
3-6	CONSTRUCTION DETAILS
7	CONSTRUCTION AREA SIGNS
8	TRAFFIC HANDLING PLAN
9-10	PAVEMENT DELINEATION QUANTITIES
11-12	SUMMARY OF QUANTITIES
13-25	REVISED STANDARD PLANS

THE STANDARD PLANS LIST APPLICABLE TO THIS CONTRACT IS INCLUDED IN THE NOTICE TO BIDDERS AND SPECIAL PROVISIONS BOOK.

STATE OF CALIFORNIA

DEPARTMENT OF TRANSPORTATION

PROJECT PLANS FOR CONSTRUCTION ON

STATE HIGHWAY

IN DEL NORTE COUNTY AT SMITH RIVER FROM SMITH RIVER OVERFLOW TO 0.2 MILE NORTH OF ROWDY CREEK BRIDGE

TO BE SUPPLEMENTED BY STANDARD PLANS DATED 2010

LOCATION MAP

STREET NAMES

No.	NAME
1	KINGS VALLEY Rd
2	KRISTIAN Ln
3	REYNOLDS Ln
4	LAKE EARL Dr
5	S. BANK Rd
6	S FRED D HAIGHT Dr
7	ROSSINI Ln
8	KNUTSEN Ln
9	ROSE Ln
10	MORRISON CREEK Rd
11	ZOE Ln
12	BORO Ln
13	WILSON Ln
14	E DENNEY St
15	TIMBER Blvd
16	ROWDY CREEK Rd
17	N FRED D HAIGHT Dr
18	HAIGHT Ave
19	N BECKSTEAD Ave
20	WESTBROOK Ln
21	N WESTBROOK Ln
22	SARINA Rd
23	OCEANVIEW Dr

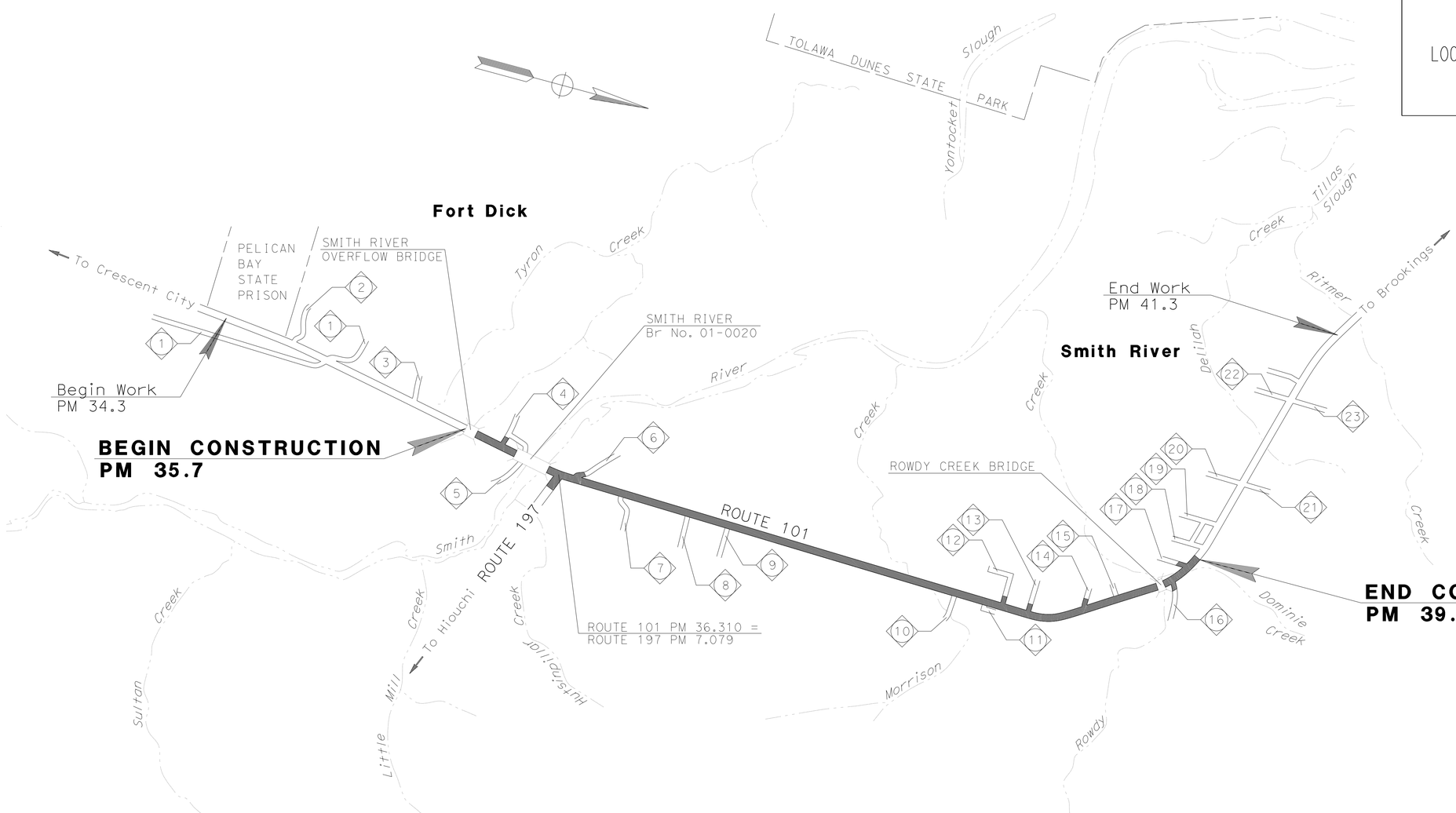

NO SCALE

THE CONTRACTOR SHALL POSSESS THE CLASS (OR CLASSES) OF LICENSE AS SPECIFIED IN THE "NOTICE TO BIDDERS."

Curtis D. Coburn 2-13-15
PROJECT ENGINEER DATE
REGISTERED CIVIL ENGINEER

REGISTERED PROFESSIONAL ENGINEER CURTIS D. COBURN No. 58431 Exp. 12-31-16 CIVIL STATE OF CALIFORNIA

February 20, 2015
PLANS APPROVAL DATE

THE STATE OF CALIFORNIA OR ITS OFFICERS OR AGENTS SHALL NOT BE RESPONSIBLE FOR THE ACCURACY OR COMPLETENESS OF SCANNED COPIES OF THIS PLAN SHEET.

CONTRACT No.	01-0E4404
PROJECT ID	0114000068

PROJECT MANAGER R. McCARTHY
DESIGN MANAGER R. McCARTHY

LAST REVISION 01-26-15
DATE PLOTTED => 23-FEB-2015
TIME PLOTTED => 13:48

Dist	COUNTY	ROUTE	POST MILES TOTAL PROJECT	SHEET No.	TOTAL SHEETS
01	DN	101	35.7/39.9	2	25

REGISTERED CIVIL ENGINEER — DATE 2-13-15

February 20, 2015
PLANS APPROVAL DATE

REGISTERED PROFESSIONAL ENGINEER — CURTIS D. COBURN — No. 58431 — Exp. 12-31-16 — CIVIL — STATE OF CALIFORNIA

THE STATE OF CALIFORNIA OR ITS OFFICERS OR AGENTS SHALL NOT BE RESPONSIBLE FOR THE ACCURACY OR COMPLETENESS OF SCANNED COPIES OF THIS PLAN SHEET.

NOTES:

1. FOR COMPLETE RIGHT OF WAY DATA, SEE RIGHT OF WAY RECORD MAPS AT DISTRICT OFFICE.
2. DIMENSIONS OF THE PAVEMENT STRUCTURES (STRUCTURAL SECTIONS) ARE SUBJECT TO TOLERANCES SPECIFIED IN THE STANDARD SPECIFICATIONS.
3. IN AREAS WHERE THE WIDTH OF THE EXISTING SURFACING VARIES FROM THAT SHOWN, VARY THE WIDTH OF THE PAVING OPERATIONS AS DIRECTED BY THE ENGINEER.
4. FOR HMA DIKE TO BE REMOVED AND TYPE OF HMA DIKE PLACED, SEE SHEET Q-1.

LEGEND

BWC-OG = HOT MIX ASPHALT-OPEN GRADED (BONDED WEARING COURSE)

HMA-A = HOT MIX ASPHALT (TYPE A)

PAVEMENT CLIMATE REGION

LOW MOUNTAIN

S-1: 0.10' BWC-OG

E-1: Exist; 0.08' OGAC; 0.50' AC; 0.50' AB (CLASS 2)

E-2: Exist; 0.08' OGAC; 0.25' RECYCLED AC; 0.13' AC; 0.50' AB; 0.25' SUBBASE

E-3: Exist; 0.08' OGAC; 0.25' RECYCLED AC; 0.13' AC; 0.50' CTB; 0.25' SUBBASE

E-4: Exist; 0.08' OGAC; 0.25' RECYCLED AC; 0.23' AC; 0.50' CTB; 0.25' SUBBASE

E-5: Exist; 0.08' OGAC; 0.45' RECYCLED AC; 0.65' AB

E-6: Exist; 0.08' OGAC; 0.05' OGAC; 0.55' AC (TYPE B); 0.50' AB

E-7: Exist; 0.08' OGAC; 0.05' OGAC; 0.30' AC; 0.50' CTB; 0.25' SUBBASE

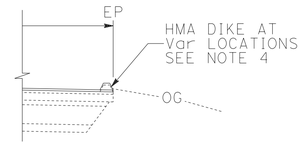

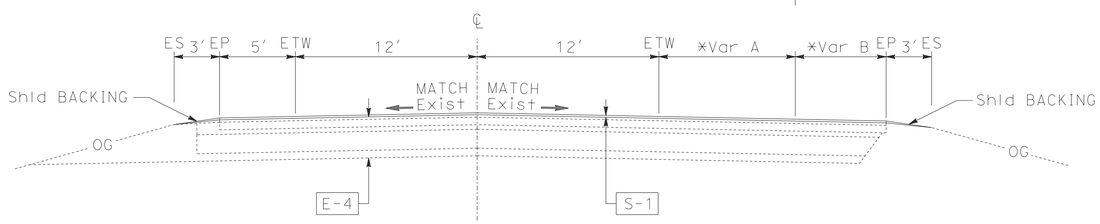

PM 36.26 TO 36.54
PM 39.74 TO 39.88

*Var A FOR PM 36.26/36.27 0'-14'
PM 36.27/36.30 14'-21'
PM 36.30/36.33 21'
PM 36.33/36.35 21'-12'
PM 36.35/36.46 12'
PM 36.46/36.54 12'-0'
PM 39.74/39.79 0'-12'
PM 39.79/39.82 12'
PM 39.82/39.88 12'-0'

*Var B FOR PM 36.26/36.46 6'
PM 36.46/36.54 6'-5'
PM 39.74/39.88 5'

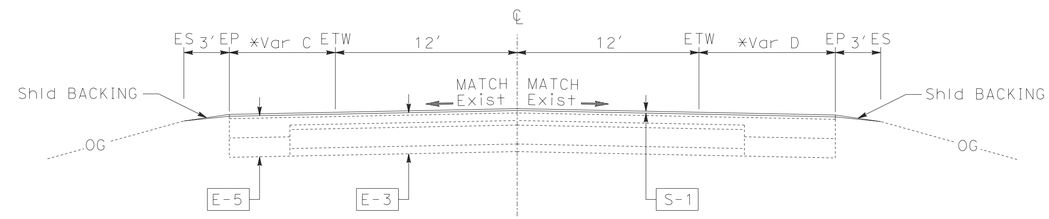

PM 39.59 TO 39.63
PM 39.67 TO 39.72

*Var C FOR PM 39.59/39.63 5'-8'
PM 39.67/39.72 8'-5'

*Var D FOR PM 39.59/39.63 11'-8'
PM 39.67/39.72 8'-5'

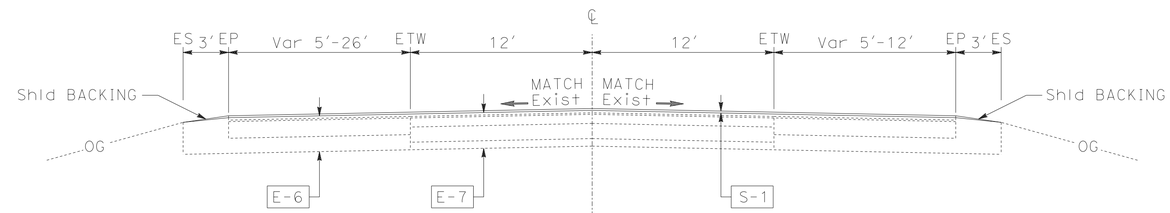

PM 39.37 TO 39.43
PM 39.54 TO 39.59

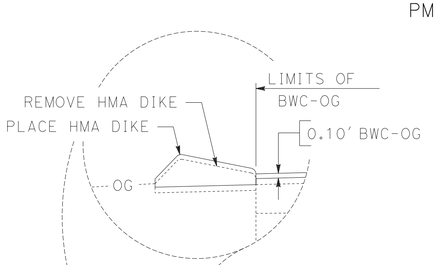

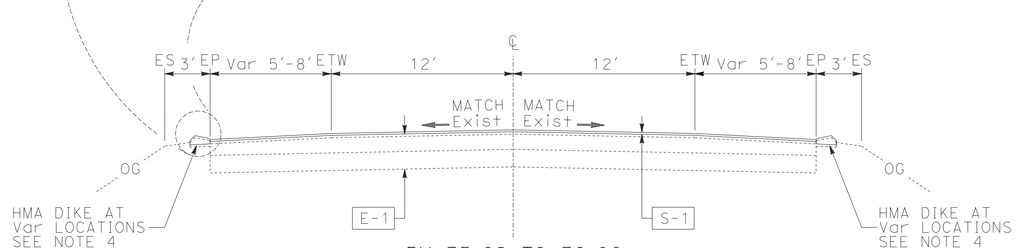

PM 35.82 TO 36.06

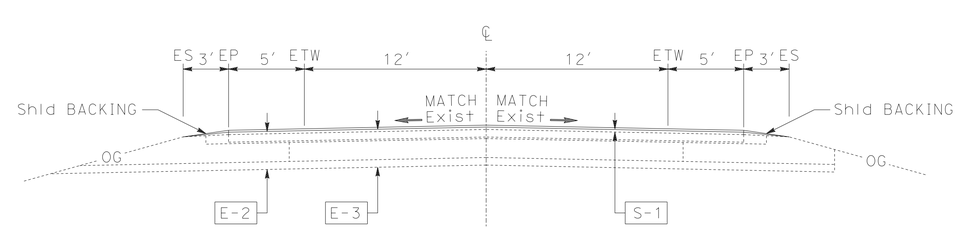

PM 36.54 TO 39.37
PM 39.43 TO 39.54
PM 39.72 TO 39.74
PM 39.88 TO 39.90

ROUTE 101

EXISTING UTILITY FACILITIES HAVE NOT BEEN PLOTTED ON THESE PLANS

TYPICAL CROSS SECTIONS

NO SCALE

X-1

STATE OF CALIFORNIA - DEPARTMENT OF TRANSPORTATION
Caltrans® MAINTENANCE DESIGN

FUNCTIONAL SUPERVISOR: ROYAL McCARTHY
CALCULATED-DESIGNED BY: JOHNATHON JACKSON
CHECKED BY: GAVIN KEATING
REVISED BY / DATE REVISED

LAST REVISION 02-03-15
DATE PLOTTED => 23-FEB-2015
TIME PLOTTED => 13:48

Dist	COUNTY	ROUTE	POST MILES TOTAL PROJECT	SHEET No.	TOTAL SHEETS
01	DN	101	35.7/39.9	3	25

REGISTERED CIVIL ENGINEER — DATE 2-13-15

February 20, 2015
PLANS APPROVAL DATE

REGISTERED PROFESSIONAL ENGINEER — CURTIS D. COBURN — No. 58431 — Exp. 12-31-16 — CIVIL — STATE OF CALIFORNIA

THE STATE OF CALIFORNIA OR ITS OFFICERS OR AGENTS SHALL NOT BE RESPONSIBLE FOR THE ACCURACY OR COMPLETENESS OF SCANNED COPIES OF THIS PLAN SHEET.

NOTES:

1. FOR COMPLETE RIGHT OF WAY DATA, SEE RIGHT OF WAY RECORD MAPS AT DISTRICT OFFICE.
2. IN AREAS WHERE THE WIDTH OF THE EXISTING SURFACING VARIES FROM THAT SHOWN, VARY THE WIDTH OF THE PAVING OPERATIONS AS DIRECTED BY THE ENGINEER.

LEGEND

- LIMITS OF COLD PLANE AC PAVEMENT
- LIMITS OF BWC-OG
- LIMITS OF HMA-A
- LIMITS OF REPLACE AC SURFACING
- PLACE HOT MIX ASPHALT (MISCELLANEOUS AREA)

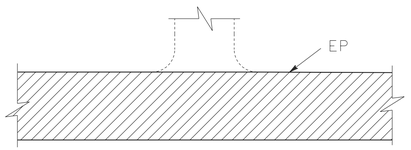

PRIVATE ROAD / DRIVEWAY CONNECTION

DESCRIPTION	PM	COMMENTS
ROSSINI Ln	36.67 Rt	Exist AC
ULRICH Ln	37.00 Lt	Exist AC
KNUTSEN Ln	37.00 Rt	Exist AC
PRIVATE Rd	37.26 Lt	Exist GRAVEL
ROSE Ln	37.26 Rt	Exist AC
MOUNTAIN VIEW Dr	37.50 Lt	Exist GRAVEL
WONDERSTUMP Rd	37.50 Rt	Exist AC
PRIVATE Dr	37.97 Lt	Exist AC
PRIVATE Rd	37.97 Rt	Exist AC
PRIVATE Dr	38.30 Lt	Exist AC
PRIVATE Rd	38.50 Lt	Exist AC
MORRISON CREEK Rd	38.50 Rt	Exist AC
ZOE Ln	38.68 Rt	Exist AC
PRIVATE Dr	38.78 Rt	Exist AC
WILSON Ln	38.92 Rt	Exist AC
WILSON Ln	38.92 Lt	Exist AC
PRIVATE Rd	39.11 Lt	Exist AC
PRIVATE Dr	39.11 Rt	Exist AC
TIMBER Blvd	39.41 Lt	Exist AC
S MILL Ent	39.41 Rt	Exist AC
PRIVATE Dr	39.58 Lt	Exist AC
N MILL Ent	39.58 Rt	Exist AC

LIMITS OF SURFACING FOR PRIVATE ROAD CONNECTIONS

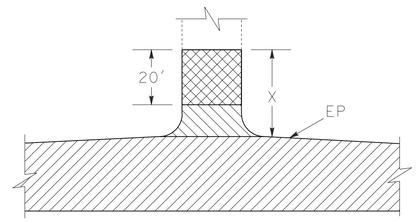

PUBLIC ROAD CONNECTION

LOCATION	PM	X FT
LAKE EARL Dr	35.96 Lt	86
S FRED D HAIGHT Dr	36.47 Lt	68
BORO Ln	38.77 Lt	44
WILSON Ln	38.91 Lt	44
E DENNEY St	39.23 Lt	51
ROWDY CREEK Rd	39.71 Rt	51
N FRED D HAIGHT Dr	39.82 Lt	89

LIMITS OF SURFACING AT PUBLIC ROAD CONNECTIONS

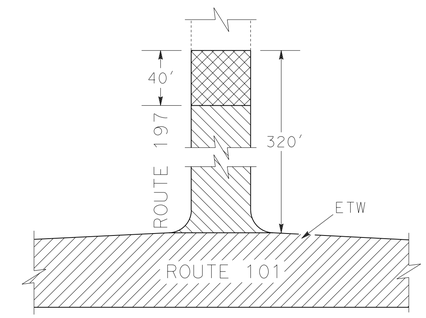

ROUTE 101/197 AT GRADE INTERSECTION

LOCATION	PM
ROUTE 197	36.31 Rt

LIMITS OF SURFACING AT ROUTE 197

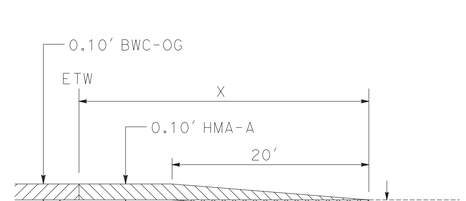

COLD PLANE AC PAVEMENT AT PUBLIC ROAD CONNECTIONS

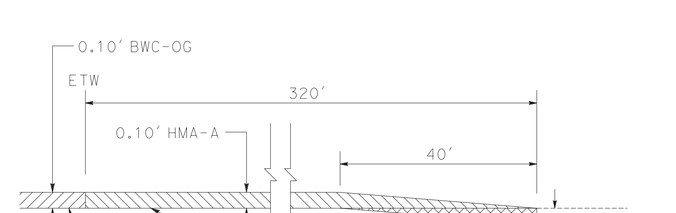

COLD PLANE AC PAVEMENT AT ROUTE 197

EXISTING UTILITY FACILITIES HAVE NOT BEEN PLOTTED ON THESE PLANS

CONSTRUCTION DETAILS

NO SCALE

C-1

REVISED BY | DATE REVISED
JOHNATHON JACKSON | GAVIN KEATING
CALCULATED-DESIGNED BY | CHECKED BY
FUNCTIONAL SUPERVISOR: ROYAL McCARTHY

STATE OF CALIFORNIA - DEPARTMENT OF TRANSPORTATION
Caltrans® **MAINTENACE DESIGN**

LAST REVISION 02-03-15 | DATE PLOTTED => 23-FEB-2015 | TIME PLOTTED => 13:48

Dist	COUNTY	ROUTE	POST MILES TOTAL PROJECT	SHEET No.	TOTAL SHEETS
01	DN	101	35.7/39.9	4	25

Curtis D. Coburn 2-13-15
REGISTERED CIVIL ENGINEER DATE

February 20, 2015
PLANS APPROVAL DATE

REGISTERED PROFESSIONAL ENGINEER CURTIS D. COBURN No. 58431 Exp. 12-31-16 CIVIL STATE OF CALIFORNIA

THE STATE OF CALIFORNIA OR ITS OFFICERS OR AGENTS SHALL NOT BE RESPONSIBLE FOR THE ACCURACY OR COMPLETENESS OF SCANNED COPIES OF THIS PLAN SHEET.

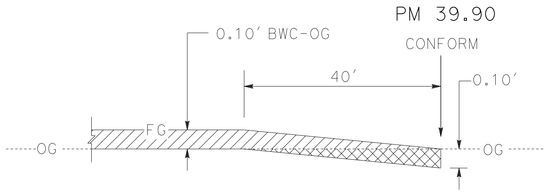

COLD PLANE AC PAVEMENT AT NORTH PROJECT CONFORM

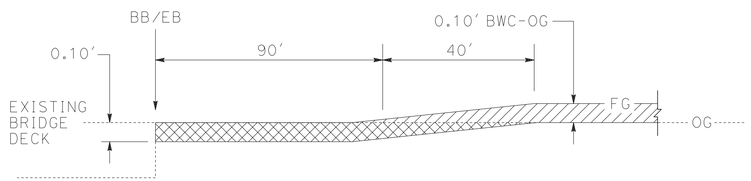

COLD PLANE AC PAVEMENT AT BB & EB

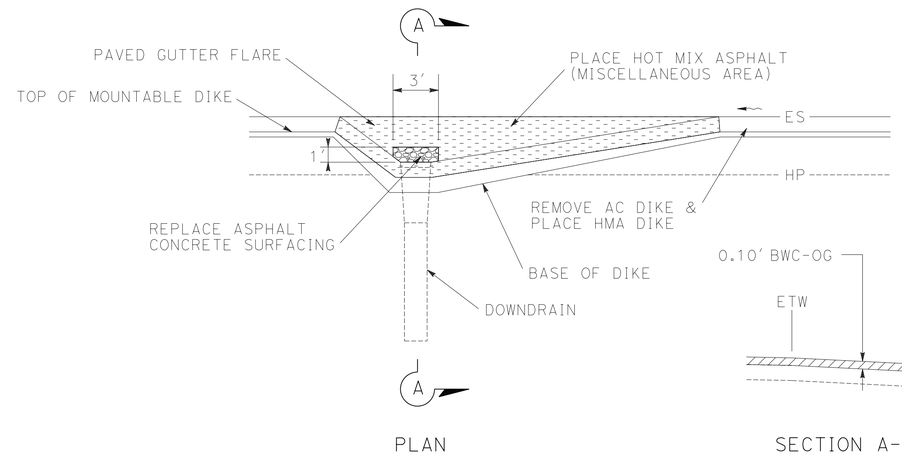

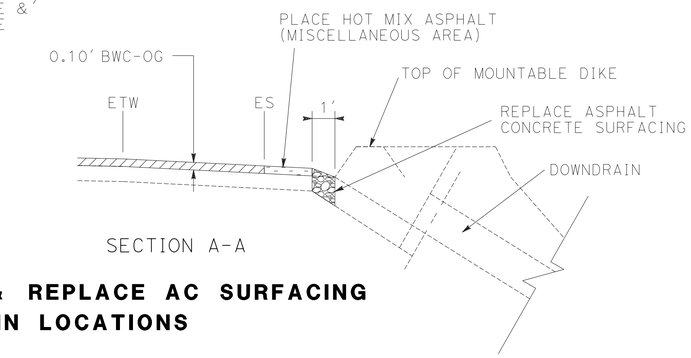

PLACE HMA (MISC AREA) & REPLACE AC SURFACING AT DOWNDRAIN LOCATIONS

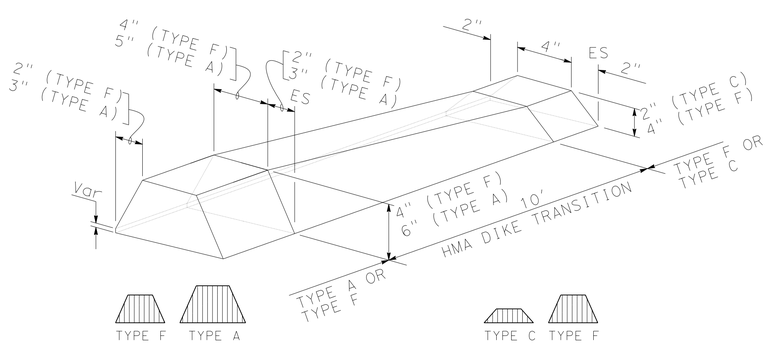

HMA DIKE (TYPE F) OR (TYPE A) TO HMA DIKE (TYPE C) OR (TYPE F)

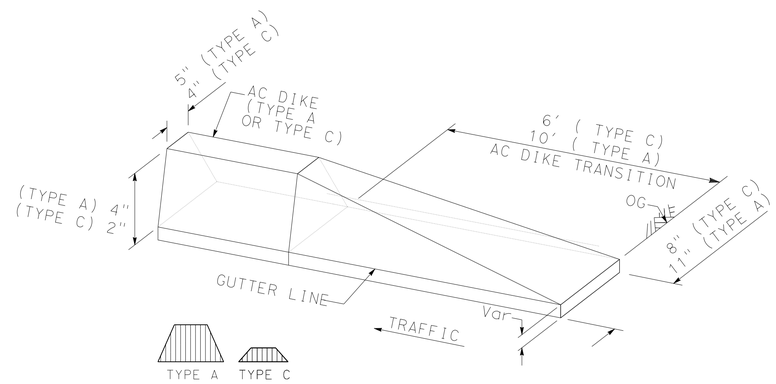

HMA DIKE (TYPE A) OR (TYPE C) APPROACH

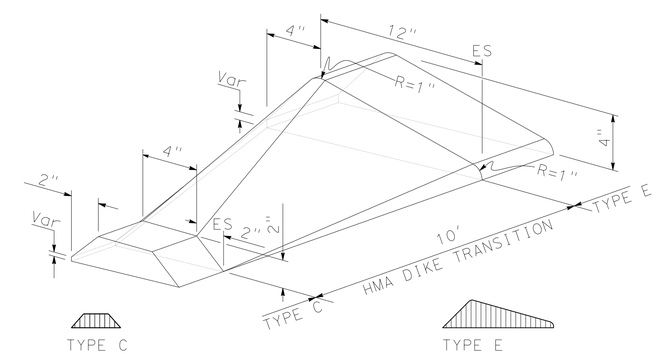

HMA DIKE (TYPE C) TO HMA DIKE (TYPE E)

HMA DIKE TRANSITION DETAILS

EXISTING UTILITY FACILITIES HAVE NOT BEEN PLOTTED ON THESE PLANS

CONSTRUCTION DETAILS

NO SCALE

C-2

REVISED BY | DATE REVISED
JOHNATHON JACKSON | GAVIN KEATING
CALCULATED-DESIGNED BY | CHECKED BY
FUNCTIONAL SUPERVISOR | ROYAL McCARTHY

STATE OF CALIFORNIA - DEPARTMENT OF TRANSPORTATION
Caltrans® **MAINTENACE DESIGN**

LAST REVISION 02-03-15 | DATE PLOTTED => 23-FEB-2015 | TIME PLOTTED => 13:48

Dist	COUNTY	ROUTE	POST MILES TOTAL PROJECT	SHEET No.	TOTAL SHEETS
01	DN	101	35.7/39.9	5	25

Curtis D. Coburn 2-13-15
REGISTERED CIVIL ENGINEER DATE

February 20, 2015
PLANS APPROVAL DATE

REGISTERED PROFESSIONAL ENGINEER
CURTIS D. COBURN
No. 58431
Exp. 12-31-16
CIVIL
STATE OF CALIFORNIA

THE STATE OF CALIFORNIA OR ITS OFFICERS OR AGENTS SHALL NOT BE RESPONSIBLE FOR THE ACCURACY OR COMPLETENESS OF SCANNED COPIES OF THIS PLAN SHEET.

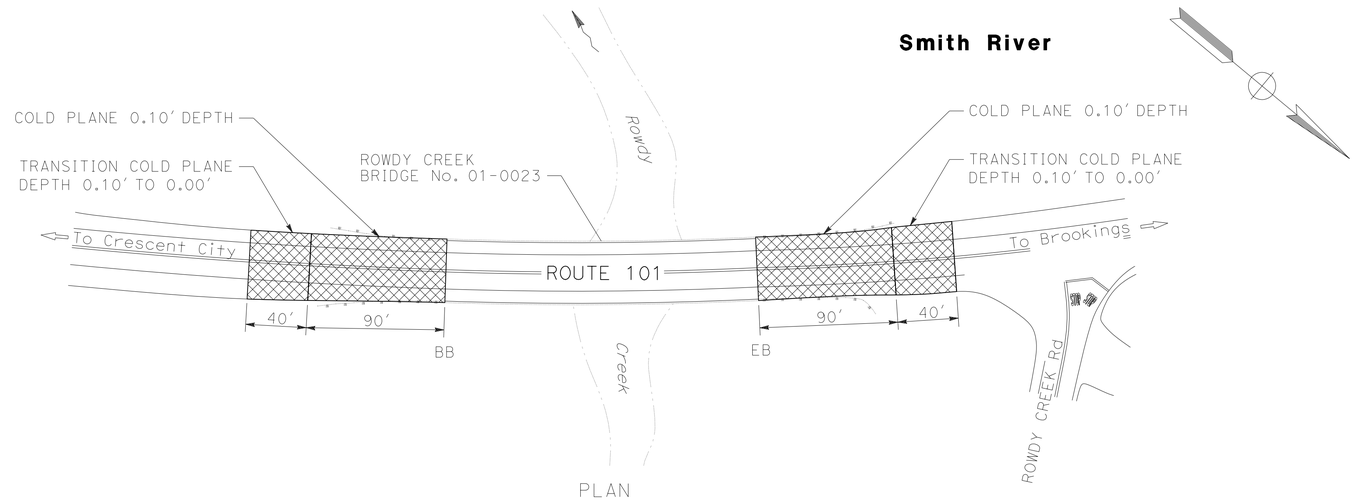

PLAN

COLD PLANE ROWDY CREEK
BRIDGE No. 01-0023

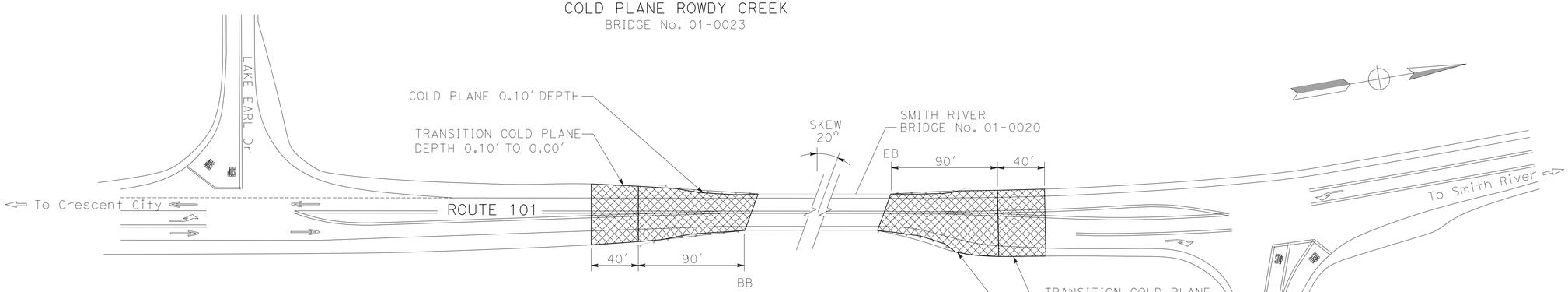

PLAN

SMITH RIVER
BRIDGE No. 01-0020

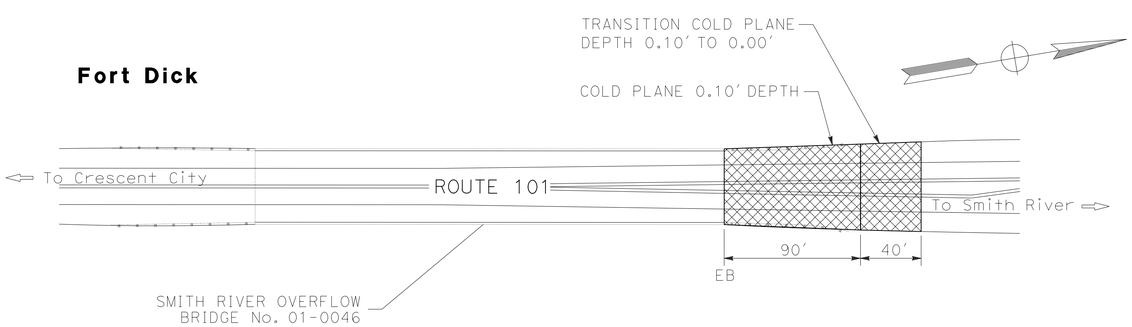

PLAN

COLD PLANE SMITH RIVER OVERFLOW
BRIDGE No. 01-0046

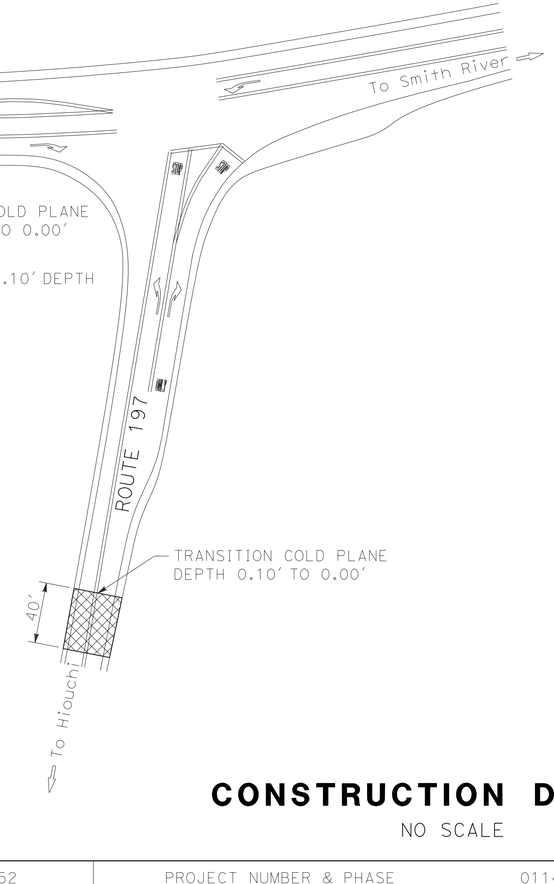

EXISTING UTILITY FACILITIES HAVE NOT BEEN PLOTTED ON THESE PLANS

CONSTRUCTION DETAILS

NO SCALE

C-3

STATE OF CALIFORNIA - DEPARTMENT OF TRANSPORTATION
Caltrans® **MAINTENACE DESIGN**

FUNCTIONAL SUPERVISOR: ROYAL McCARTHY
CALCULATED-DESIGNED BY: JOHNATHON JACKSON
CHECKED BY: GAVIN KEATING
REVISED BY
DATE REVISED

LAST REVISION 02-03-15
DATE PLOTTED => 23-FEB-2015
TIME PLOTTED => 13:48

Dist	COUNTY	ROUTE	POST MILES TOTAL PROJECT	SHEET No.	TOTAL SHEETS
01	DN	101	35.7/39.9	6	25

Curtis D. Coburn 2-13-15
REGISTERED CIVIL ENGINEER DATE

February 20, 2015
PLANS APPROVAL DATE

REGISTERED PROFESSIONAL ENGINEER CURTIS D. COBURN No. 58431 Exp. 12-31-16 CIVIL STATE OF CALIFORNIA

THE STATE OF CALIFORNIA OR ITS OFFICERS OR AGENTS SHALL NOT BE RESPONSIBLE FOR THE ACCURACY OR COMPLETENESS OF SCANNED COPIES OF THIS PLAN SHEET.

LEGEND

DIRECTION OF TRAVEL

RUMBLE STRIP

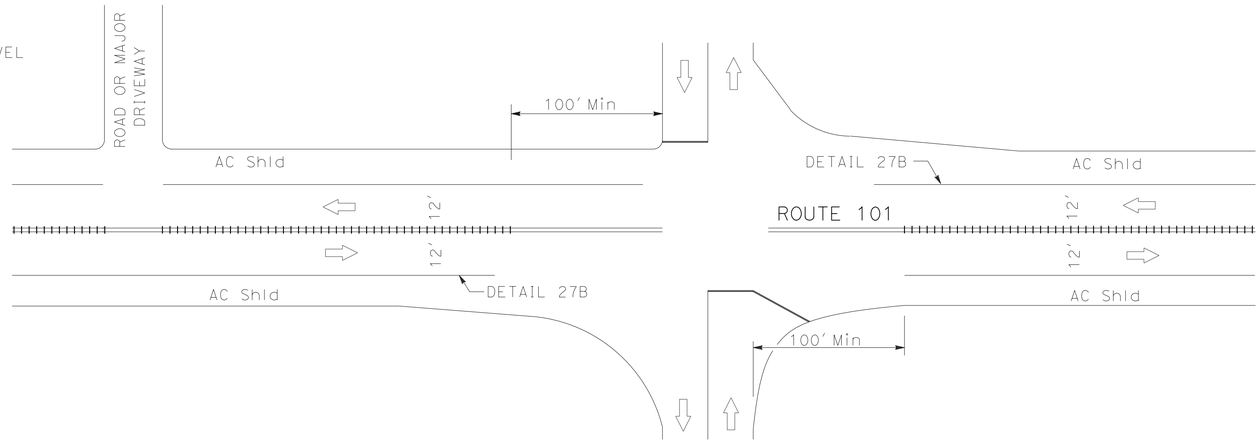

INTERSECTING ROADS AND MAJOR DRIVEWAYS

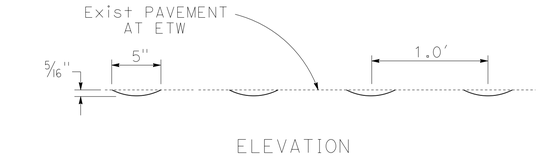

ELEVATION

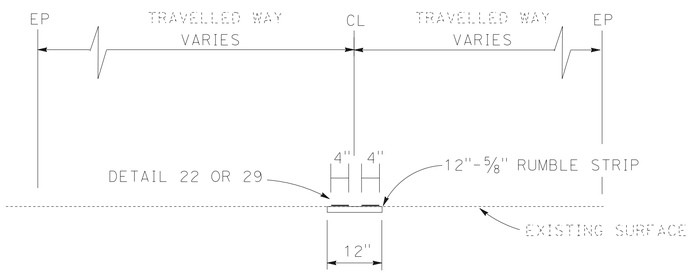

SECTION A-A

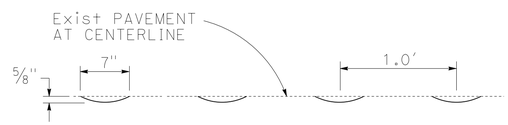

ELEVATION

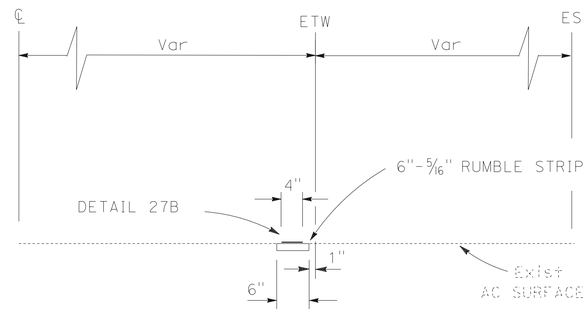

SECTION B-B

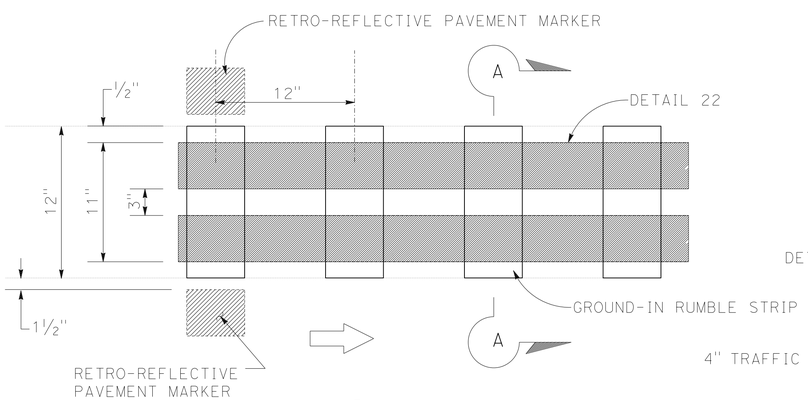

PLAN

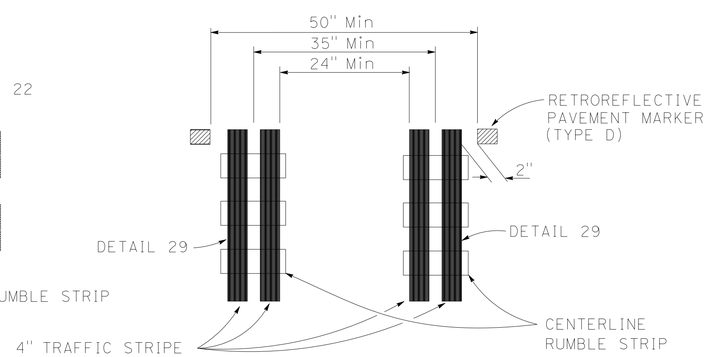

PLAN

CENTERLINE RUMBLE STRIP

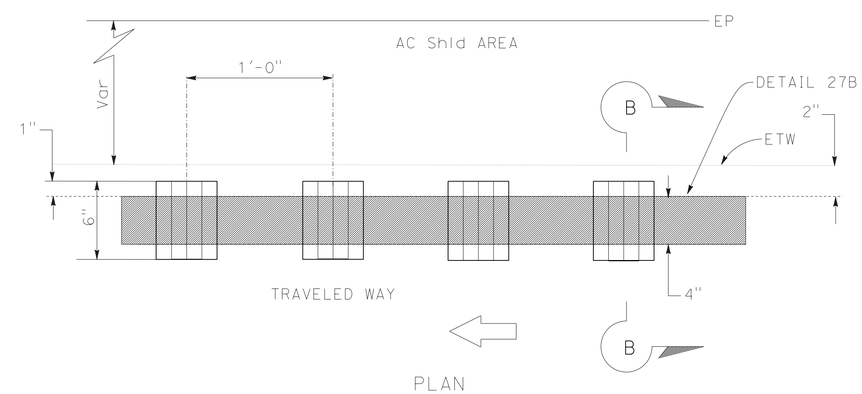

PLAN

SHOULDER RUMBLE STRIP

EXISTING UTILITY FACILITIES HAVE NOT BEEN PLOTTED ON THESE PLANS

CONSTRUCTION DETAILS

NO SCALE

C-4

STATE OF CALIFORNIA - DEPARTMENT OF TRANSPORTATION
Caltrans® **MAINTENACE DESIGN**

FUNCTIONAL SUPERVISOR: ROYAL McCARTHY
CALCULATED-DESIGNED BY: JOHNATHON JACKSON
CHECKED BY: GAVIN KEATING
REVISED BY
DATE REVISED

LAST REVISION 02-20-15
DATE PLOTTED => 23-FEB-2015
TIME PLOTTED => 13:48

NOTE:
EXACT SIGN LOCATIONS TO BE DETERMINED BY THE ENGINEER.

Dist	COUNTY	ROUTE	POST MILES TOTAL PROJECT	SHEET No.	TOTAL SHEETS
01	DN	101	35.7/39.9	7	25

Curtis D. Coburn 2-13-15
REGISTERED CIVIL ENGINEER DATE

February 20, 2015
PLANS APPROVAL DATE

REGISTERED PROFESSIONAL ENGINEER
CURTIS D. COBURN
No. 58431
Exp. 12-31-16
CIVIL
STATE OF CALIFORNIA

THE STATE OF CALIFORNIA OR ITS OFFICERS OR AGENTS SHALL NOT BE RESPONSIBLE FOR THE ACCURACY OR COMPLETENESS OF SCANNED COPIES OF THIS PLAN SHEET.

STATIONARY MOUNTED CONSTRUCTION AREA SIGNS

SIGN No.	SIGN CODE	SIGN MESSAGE	PANEL SIZE	No. OF POSTS AND SIZE	No. OF SIGNS (N)
A	G20-1	ROAD WORK NEXT 4 MILES	90" x 48"	2-6" x 6"	3
	C23B(CA)	RESURFACING	54" x 18"		
B	W11-1	BICYCLE SYMBOL	36" x 36"	1-4" x 6"	3
	W16-1	SHARE THE ROAD	24" x 30"		
C	G20-2	END ROAD WORK	48" x 24"	1-4" x 6"	3
D	W20-1	ROAD WORK AHEAD	36" x 36"	1-4" x 6"	13
E	C40(CA)	TRAFFIC FINES DOUBLED IN CONSTRUCTION ZONES	144" x 60"	2-6" x 8"	3

(N) NOT A SEPARATE PAY ITEM. FOR INFORMATION ONLY.

C23B(CA)
54"x18"
BLACK/ORANGE
4" CAPS

RESURFACING

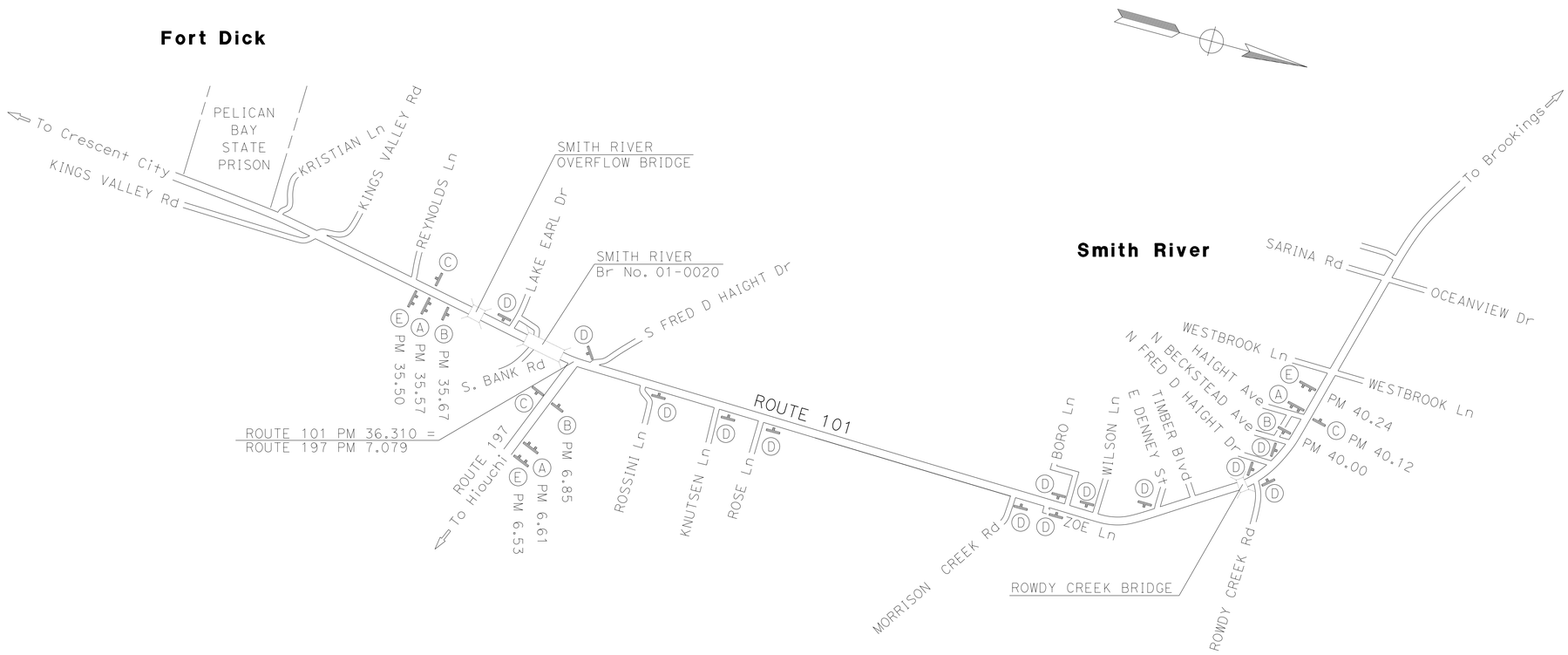

EXISTING UTILITY FACILITIES HAVE NOT BEEN PLOTTED ON THESE PLANS

APPROVED FOR CONSTRUCTION AREA SIGN WORK ONLY

CONSTRUCTION AREA SIGNS
NO SCALE
CS-1

STATE OF CALIFORNIA - DEPARTMENT OF TRANSPORTATION
Caltrans® **MAINTENACE DESIGN**
FUNCTIONAL SUPERVISOR: ROYAL McCARTHY
CALCULATED-DESIGNED BY: JOHNATHON JACKSON
CHECKED BY: GAVIN KEATING
REVISED BY
DATE REVISED

LAST REVISION 02-03-15
DATE PLOTTED => 23-FEB-2015
TIME PLOTTED => 13:48

Dist	COUNTY	ROUTE	POST MILES TOTAL PROJECT	SHEET No.	TOTAL SHEETS
01	DN	101	35.7/39.9	8	25

Sheri M. Rodriguez 2-17-15
REGISTERED CIVIL ENGINEER DATE

February 20, 2015
PLANS APPROVAL DATE

REGISTERED PROFESSIONAL ENGINEER SHERI M. RODRIGUEZ No. C66861 Exp. 9-30-16 CIVIL STATE OF CALIFORNIA

THE STATE OF CALIFORNIA OR ITS OFFICERS OR AGENTS SHALL NOT BE RESPONSIBLE FOR THE ACCURACY OR COMPLETENESS OF SCANNED COPIES OF THIS PLAN SHEET.

NOTES:

1. CALIFORNIA CODES ARE DESIGNATED BY (CA). OTHERWISE, FEDERAL (MUTCD) CODES ARE SHOWN.
2. ALL SIGNS SHALL HAVE A BLACK LEGEND ON FLUORESCENT ORANGE BACKGROUND AND SHALL BE EQUIPPED WITH AT LEAST TWO 16" x 16" ORANGE FLAGS FOR DAYTIME CLOSURE OR FLASHING BEACONS FOR LANE CLOSURE DURING HOURS OF DARKNESS.
3. ALL CONES USED FOR LANE CLOSURES DURING THE HOURS OF DARKNESS SHALL BE FITTED WITH RETROREFLECTIVE BANDS OR SLEEVES.
4. WHEN A PILOT CAR IS USED, PLACE A C37 (CA) SIGN AT ALL INTERSECTIONS WITHIN TRAFFIC CONTROL AREA. WHERE VEHICULAR TRAFFIC CAN NOT EFFECTIVELY SELF-REGULATE, AT LEAST ONE FLAGGER SHALL BE USED AT EACH INTERSECTION WITHIN THE TRAFFIC CONTROL AREA.
5. FLAGGER SHOULD STAND IN A CONSPICUOUS PLACE, FACING TRAFFIC AT ALL TIMES, BE VISIBLE TO APPROACHING TRAFFIC AS WELL AS APPROACHING VEHICLES AFTER THE FIRST VEHICLE HAS STOPPED.
6. ADDITIONAL ADVANCE FLAGGERS ARE REQUIRED.
7. WHEN FLAGGER IS NOT VISIBLE FROM THIS LOCATION PLACE A C29 (CA) SIGN BELOW THE C9A (CA) SIGN.

LEGEND

- TRAFFIC CONE
- TEMPORARY SIGN
- DIRECTION OF TRAVEL
- PORTABLE FLASHING BEACON
- FLAGGER

SIGN PANEL SIZE (MINIMUM)

A	48" x 48" - SPEED OF 45 mph OR MORE 36" x 36" - SPEED LESS THAN 45 mph
B	30" x 30"
C	UNUSED
D	UNUSED
E	20" x 7"

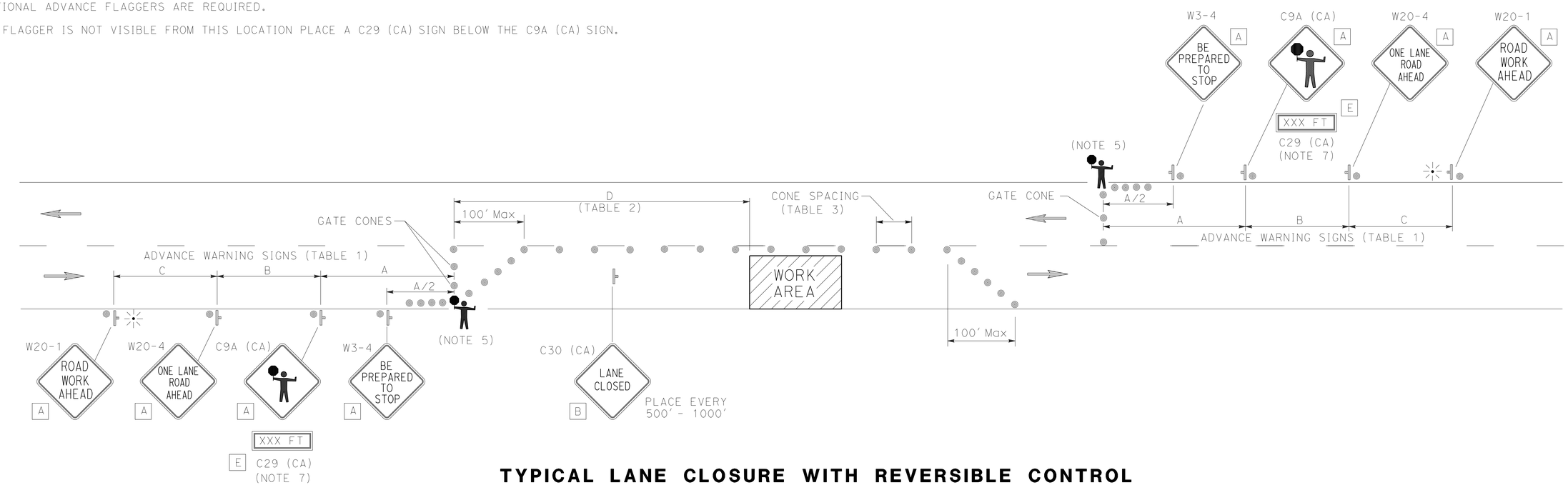

TYPICAL LANE CLOSURE WITH REVERSIBLE CONTROL

TABLE 1

ADVANCE WARNING SIGN SPACING

ROAD TYPE	Min A	Min B	Min C
	ft		
URBAN (25 mph OR LESS)	100	100	100
URBAN (30 mph TO 40 mph)	250	250	250
URBAN (MORE THAN 40 mph)	350	350	350
RURAL	500	500	500
EXPRESSWAY / FREEWAY	1000	1500	2640

TABLE 2

BUFFER SPACE

APPROACH SPEED	Min D	DOWNGRADE Min D		
		-3%*	-6%*	-9%*
mph	ft			
25 & BELOW	155	158	165	173
30	200	205	215	227
35	250	257	271	287
40	305	315	333	354
45	360	378	400	427
50	425	446	474	507
55	495	520	553	593
60	570	598	638	686
65	645	682	728	785

* USE ON SUSTAINED DOWNGRADE STEEPER THAN -3 PERCENT AND LONGER THAN 1 MILE.

TABLE 3

Max CONE SPACING

POSTED SPEED	TAPER	TANGENT	CONFLICT
mph	ft		
20	20	40	10
25	25	50	12
30	30	60	15
35	35	70	17
40	40	80	20
45	45	90	22
50	50	100	25
55	55	110	27
60	60	120	30
65	65	130	32

TRAFFIC HANDLING PLAN

NO SCALE

APPROVED FOR TRAFFIC HANDLING WORK ONLY

TH-1

REVISED BY | DATE REVISED
SHERI M. RODRIGUEZ | TROY A. ARSENEAU
CALCULATED-DESIGNED BY | CHECKED BY
FUNCTIONAL SUPERVISOR: TROY A. ARSENEAU

STATE OF CALIFORNIA - DEPARTMENT OF TRANSPORTATION
Caltrans® TRAFFIC OPERATIONS

P:\PROJ\01\0e440\drafting\FromMaint\0114000068md001.dgn

LAST REVISION 2-17-15 | DATE PLOTTED => 23-FEB-2015 | TIME PLOTTED => 13:48

Dist	COUNTY	ROUTE	POST MILES TOTAL PROJECT	SHEET No.	TOTAL SHEETS
01	DN	101	35.7/39.9	9	25

Curtis D. Coburn 2-13-15
REGISTERED CIVIL ENGINEER DATE

February 20, 2015
PLANS APPROVAL DATE

REGISTERED PROFESSIONAL ENGINEER CURTIS D. COBURN No. 58431 Exp. 12-31-16 CIVIL STATE OF CALIFORNIA

THE STATE OF CALIFORNIA OR ITS OFFICERS OR AGENTS SHALL NOT BE RESPONSIBLE FOR THE ACCURACY OR COMPLETENESS OF SCANNED COPIES OF THIS PLAN SHEET.

TRAFFIC STRIPE AND PAVEMENT MARKER QUANTITIES

LOCATION (PM)		DETAIL NUMBER	DETAIL LENGTH (N)	THERMOPLASTIC TRAFFIC STRIPE (ENHANCED WET NIGHT VISIBILITY)						PAVEMENT MARKER (RETROREFLECTIVE)			REMARKS
				REMOVE	8 INCH WHITE	4 INCH YELLOW	4 INCH WHITE	4 INCH WHITE (BROKEN 12-3)	4 INCH YELLOW (BROKEN 36-12)	TYPE D	TYPE G	TYPE H	
FROM	TO		LF							EA			
35.77 R+	36.31 R+	27B	2852				2852						
35.77 L+	35.96 L+	27B	1004				1004						
35.77	35.78	22	53			106				8			
35.78	35.88	29	529			2116				48			
35.88	35.98	22	528			1056				46			
35.89 R+	35.98 R+	38	475	950	475						21		NB L+ TURN Ln TO LAKE EARL Dr
35.93 L+	36.00 L+	27C	370					370					LAKE EARL Dr
35.96 L+		22	79			158				10			LAKE EARL Dr
35.97 L+	36.47 L+	27B	2640				2640						
35.99	36.06	29	370			1480				34			
36.06	36.26	22	1056			2112				90			
36.26	36.31	29	265			1060				26			
36.28 R+	36.31 R+	38	140	280	140						7		NB R+ TURN Ln TO Rte 197
36.31 R+		22	310			620				28			Rte 197
36.31 R+		38A	165	330	165								WB L+ TURN Ln TO ROUTE 101 S
36.31 R+		38A	68	136	68								WB R+ TURN Ln TO ROUTE 101 N
36.31 R+	39.69 R+	27B	17847				17847						
36.32	36.46	22	740			1480				64			
36.32 L+	36.38 L+	38	340	680	340						16		SB L+ TURN Ln TO ROUTE 197
36.40 R+	36.46 R+	38	280	560	280						13		NB L+ TURN Ln TO S FRED D HAIGHT Dr
36.47 L+		22	62			124				8			S FRED D HAIGHT Dr
36.47	36.53	29	317			1268				30			
36.50 L+	38.76 L+	27B	11933				11933						
36.53	36.55	22	106			212				12			
36.55	36.71	19L	845			845			845	19		37	
36.71	38.61	6	10032						10032	210			
38.61	38.76	22	792			1584				68			
38.76	38.90	22	740			1480				64			
38.77 L+		22	40			80				6			BORO Ln
38.78 L+	38.90 L+	27B	634				634						
38.91 L+		22	40			80				6			WILSON Ln
38.91 L+	39.22 L+	27B	1637				1637						
38.91	39.21	22	1585			3170				136			
39.22	39.28	19L	317			317			317	8		15	
39.23 L+		22	47			94				6			E DENNEY St
39.23 L+	39.80 L+	27B	3010				3010						
39.28	39.50	6	1162						1162	26			
39.50	39.62	19R	634			634			634	15		28	
39.62	39.70	22	423			846				38			
39.69 R+	39.72 R+	27C	159					159					ROWDY CREEK Rd
39.71 R+		22	46			92				6			ROWDY CREEK Rd
39.71 R+	39.90 R+	27B	1004				1004						
39.71	39.73	22	106			212				12			
39.73	39.79	29	317			1268				30			
39.79	39.82	22	159			318				16			
39.82 L+	39.90 L+	27B	423				423						
39.79 R+	39.82 R+	38	165	330	165						8		NB L+ TURN Ln TO N FRED D HAIGHT Dr
39.82 R+		22	84			168				10			N FRED D HAIGHT Dr
39.82 R+		38A	48	96	48								EB L+ TURN Ln TO ROUTE 101 N
39.82 R+		38A	65	130	65								EB TO ROUTE 101
SUBTOTAL				3492	1746	22980	42984	529	12990	1080	65	80	
TOTAL SHEET PDQ-1				3492	1746	65964		529	12990	1225			

(N) NOT A SEPARATE PAY ITEM. FOR INFORMATION ONLY.

PAVEMENT DELINEATION QUANTITIES
PDQ-1

STATE OF CALIFORNIA - DEPARTMENT OF TRANSPORTATION
Caltrans® MAINTENACE DESIGN

FUNCTIONAL SUPERVISOR: ROYAL McCARTHY
CALCULATED-DESIGNED BY: JOHNATHON JACKSON
CHECKED BY: GAVIN KEATING
REVISED BY
DATE REVISED

LAST REVISION 02-03-15
DATE PLOTTED => 23-FEB-2015
TIME PLOTTED => 13:48

Dist	COUNTY	ROUTE	POST MILES TOTAL PROJECT	SHEET No.	TOTAL SHEETS
01	DN	101	35.7/39.9	10	25

Curtis D. Coburn 2-13-15
REGISTERED CIVIL ENGINEER DATE

February 20, 2015
PLANS APPROVAL DATE

REGISTERED PROFESSIONAL ENGINEER CURTIS D. COBURN No. 58431 Exp. 12-31-16 CIVIL STATE OF CALIFORNIA

THE STATE OF CALIFORNIA OR ITS OFFICERS OR AGENTS SHALL NOT BE RESPONSIBLE FOR THE ACCURACY OR COMPLETENESS OF SCANNED COPIES OF THIS PLAN SHEET.

TRAFFIC STRIPE AND PAVEMENT MARKER QUANTITIES

LOCATION (PM)		DETAIL NUMBER	DETAIL LENGTH (N)	THERMOPLASTIC TRAFFIC STRIPE (ENHANCED WET NIGHT VISIBILITY)						PAVEMENT MARKER (RETROREFLECTIVE)			REMARKS
				REMOVE	8 INCH WHITE	4 INCH YELLOW	4 INCH WHITE	4 INCH WHITE (BROKEN 12-3)	4 INCH YELLOW (BROKEN 36-12)	TYPE D	TYPE G	TYPE H	
FROM	TO		LF							EA			
39.82 R+		38A	68	136	68								
39.83	39.88	29	265			1060				26			
39.88	39.90	22	106			212				12			
SUBTOTAL				136	68	1272	0	0	0	38	0	0	
SUBTOTAL SHEET PDQ-2				136	68	1272		0	0	38			
SUBTOTAL SHEET PDQ-1				3492	1746	65964		529	12990	1225			
TOTAL				3628	1814	67236		529	12990	1263			

(N) NOT A SEPARATE PAY ITEM. FOR INFORMATION ONLY.

PAVEMENT MARKING QUANTITIES

LOCATION (PM)	ORIENTATION	LEGEND	REMOVE THERMOPLASTIC PAVEMENT MARKING	THERMOPLASTIC PAVEMENT MARKING (ENHANCED WET NIGHT VISIBILITY)	REMARKS
			SQFT		
35.87 R+	FNBT	TYPE V ARROW	33	33	NB Ln
35.87 R+	FNBT	TYPE III (L) ARROW	42	42	NB L+ TURN Ln TO LAKE EARL Dr
35.92 R+	FNBT	TYPE V ARROW	33	33	NB Ln
35.92 R+	FNBT	TYPE III (L) ARROW	42	42	NB L+ TURN Ln TO LAKE EARL Dr
35.95 R+	FNBT	TYPE V ARROW	33	33	NB Ln
35.95 R+	FNBT	TYPE III (L) ARROW	42	42	NB L+ TURN Ln TO LAKE EARL Dr
35.95 L+	FSBT	TYPE V ARROW	33	33	SB Ln
35.96 L+	FEBT	LIMIT LINE	51	51	LAKE EARL Dr
35.96 L+	FEBT	STOP (2)	44	44	LAKE EARL Dr
35.97 R+	FNBT	TYPE V ARROW	33	33	NB Ln
35.97 L+	FSBT	TYPE V ARROW	33	33	SB Ln
35.99 R+	FNBT	BICYCLE DETECTOR LOOP SYMBOL	2	2	NB Sho
36.30 R+	FNBT	TYPE III (R) ARROW	42	42	NB R+ TURN Ln TO R+e 197
36.30 L+	FSBT	BICYCLE DETECTOR LOOP SYMBOL	2	2	SB Sho
36.31 R+	FWBT	LIMIT LINE	51	51	R+e 197
36.31 R+	FWBT	STOP (2)	44	44	R+e 197
36.31 R+	FWBT	TYPE III (L) ARROW	42	42	R+e 197 - WB L+ TURN Ln TO ROUTE 101 SB
36.31 R+	FWBT	TYPE III (R) ARROW	42	42	R+e 197 - WB R+ TURN Ln TO ROUTE 101 NB
36.31 R+	FWBT	ONLY	22	22	R+e 197 - WB R+ TURN Ln TO ROUTE 101 NB
36.32 L+	FSBT	TYPE III (L) ARROW	42	42	SB L+ TURN Ln TO R+e 197
36.37 L+	FSBT	TYPE III (L) ARROW	42	42	SB L+ TURN Ln TO R+e 197
36.41 R+	FNBT	TYPE III (L) ARROW	42	42	NB L+ TURN Ln TO S FRED D HAIGHT Dr
36.45 R+	FNBT	TYPE III (L) ARROW	42	42	NB L+ TURN Ln TO S FRED D HAIGHT Dr
36.47 L+	FEBT	LIMIT LINE	38	38	S FRED D HAIGHT Dr
36.47 L+	FEBT	STOP (2)	44	44	S FRED D HAIGHT Dr
38.77 L+	FEBT	LIMIT LINE	24	24	BORO Ln
38.77 L+	FEBT	STOP	22	22	BORO Ln
38.91 L+	FEBT	LIMIT LINE	25	25	WILSON Ln
38.91 L+	FEBT	STOP	22	22	WILSON Ln
39.23 L+	FEBT	LIMIT LINE	27	27	E DENNEY St
39.23 L+	FEBT	STOP	22	22	E DENNEY St
39.71 R+	FWBT	LIMIT LINE	33	33	ROWDY CREEK Rd
39.71 R+	FWBT	STOP (2)	44	44	ROWDY CREEK Rd
39.80 L+	FEBT	LIMIT LINE	16	16	N FRED D HAIGHT Dr
39.80 L+	FEBT	STOP	22	22	N FRED D HAIGHT Dr
39.80 L+	FEBT	LIMIT LINE	16	16	N FRED D HAIGHT Dr
39.82 L+	FEBT	STOP	22	22	N FRED D HAIGHT Dr
39.82 R+	FNBT	TYPE III (L) ARROW	42	42	NB L+ TURN Ln TO N FRED D HAIGHT Dr
		TOTAL	1253	1253	

PAVEMENT DELINEATION QUANTITIES
PDQ-2

STATE OF CALIFORNIA - DEPARTMENT OF TRANSPORTATION
Caltrans® MAINTENACE DESIGN

FUNCTIONAL SUPERVISOR: ROYAL McCARTHY
CALCULATED-DESIGNED BY: JOHNATHON JACKSON
CHECKED BY: GAVIN KEATING
REVISED BY
DATE REVISED

LAST REVISION 02-03-15
DATE PLOTTED => 23-FEB-2015
TIME PLOTTED => 13:48

Dist	COUNTY	ROUTE	POST MILES TOTAL PROJECT	SHEET No.	TOTAL SHEETS
01	DN	101	35.7/39.9	11	25

Curtis D. Coburn 2-13-15
REGISTERED CIVIL ENGINEER DATE

February 20, 2015
PLANS APPROVAL DATE

REGISTERED PROFESSIONAL ENGINEER CURTIS D. COBURN No. 58431 Exp. 12-31-16 CIVIL STATE OF CALIFORNIA

THE STATE OF CALIFORNIA OR ITS OFFICERS OR AGENTS SHALL NOT BE RESPONSIBLE FOR THE ACCURACY OR COMPLETENESS OF SCANNED COPIES OF THIS PLAN SHEET.

SHOULDER BACKING QUANTITIES

LOCATION (PM) FROM	LOCATION (PM) TO	OFFSET	SHOULDER BACKING TON
35.83	35.96	L+	26
35.83	36.05	R+	44
35.99	36.04	L+	10
36.26	36.27	R+	2
36.31	36.45	L+	28
36.47	36.65	L+	36
36.50	37.03	R+	106
36.66	37.02	L+	72
37.02	37.24	L+	44
37.03	37.25	R+	44
37.24	37.50	L+	52
37.25	37.50	R+	50
37.50	37.56	L+	12
37.50	37.94	R+	88
37.58	37.96	L+	76
37.94	38.16	R+	44
37.96	38.29	L+	66
38.16	38.51	R+	70
38.30	38.51	L+	42
38.51	38.76	L+	50
38.51	38.65	R+	28
38.65	38.78	R+	26
38.77	38.90	L+	26
38.78	38.91	R+	26
38.91	39.10	L+	38
38.92	39.11	R+	38
39.10	39.21	L+	22
39.11	39.40	R+	58
39.23	39.39	L+	32
39.42	39.53	R+	22
39.43	39.57	L+	28
39.57	39.61	L+	8
39.58	39.62	R+	8
39.68	39.76	L+	16
39.69	39.71	R+	4
39.73	39.77	R+	8
39.80	39.90	R+	20
39.83	39.90	L+	14
		TOTAL	1384

RUMBLE STRIP QUANTITIES

LOCATION (PM) FROM	LOCATION (PM) TO	DETAIL NUMBER	CENTERLINE RUMBLE STRIP Sta	SHOULDER RUMBLE STRIP Sta	REMARKS
35.82	35.86	29	2.2		AT CENTER OF Det 29
39.67 L+	39.79 L+	27B		6.4	
39.72	39.73	22	0.6		
39.73	39.79	29	3.2		AT L+ SIDE OF Det 29
39.74 R+	39.90 R+	27B		8.5	
39.79	39.81	22	1.1		
39.84	39.88	29	4.4		AT BOTH SIDES OF Det 29
39.87 L+	39.90 L+	27B		1.6	
39.88	39.90	22	1.1		
		TOTAL	12.6	16.5	

MAINTAIN EXISTING TMS ELEMENTS

LOCATION (PM)	TMS ELEMENTS EA (N)	TMS ELEMENTS REMARKS
35.99	1	BICYCLE DETECTOR LOOP
36.30	1	BICYCLE DETECTOR LOOP
TOTAL	2	

(N) NOT A SEPARATE PAY ITEM. FOR INFORMATION ONLY.

DIKE AND MISCELLANEOUS AREA QUANTITIES

LOCATION (PM) FROM	LOCATION (PM) TO	OFFSET	MINOR HOT MIX ASPHALT TON	REMOVE AC DIKE LF	PLACE HMA DIKE (TYPE A) LF	PLACE HMA DIKE (TYPE C) LF	PLACE HMA DIKE (TYPE E) LF	PLACE HMA DIKE (TYPE F) LF	PLACE HOT MIX ASPHALT (MISCELLANEOUS AREA) SQYD	REPLACE ASPHALT CONCRETE SURFACING CY	REMARKS
35.82	35.83	L+	0.1	25				25			
35.82	35.83	R+	0.1	25				25			
35.83	35.85	L+	0.2	125		125					
35.83	35.85	R+	0.2	125		125					
35.85		L+	0.5						7	0.1	DOWN DRAIN GUTTER
35.85		R+	0.5						7	0.1	DOWN DRAIN GUTTER
35.85	35.91	L+	1.7	317			317				
35.85	35.92	R+	2.0	370			370				
35.91		L+	0.5						7	0.1	DOWN DRAIN GUTTER
35.91	35.96	L+	1.4	265			265				
35.92		R+	0.5						7	0.1	DOWN DRAIN GUTTER
35.92	35.98	R+	1.7	317			317				
35.96	36.04	L+	2.3	423			423				
35.98		R+	0.5						7	0.1	DOWN DRAIN GUTTER
35.98	36.03	R+	1.4	265			265				
36.03	36.06	R+	0.3	159		159					
36.04	36.05	L+	0.2	75		75					
36.05	36.06	L+	0.1	25				25			
36.28	36.31	R+	5.1	459	459						
36.31		R+	3.6	320	320						ROUTE 197
36.31	36.50	R+	14.5	1304	1304						
		TOTAL	37.4	4599	2083	484	1957	75	35	0.5	

SUMMARY OF QUANTITIES
Q-1

STATE OF CALIFORNIA - DEPARTMENT OF TRANSPORTATION
Caltrans® MAINTENACE DESIGN

FUNCTIONAL SUPERVISOR: ROYAL McCARTHY
CALCULATED-DESIGNED BY: JOHNATHON JACKSON
CHECKED BY: GAVIN KEATING
REVISED BY
DATE REVISED

LAST REVISION 02-03-15
DATE PLOTTED => 23-FEB-2015
TIME PLOTTED => 13:48

Dist	COUNTY	ROUTE	POST MILES TOTAL PROJECT	SHEET No.	TOTAL SHEETS
01	DN	101	35.7/39.9	12	25

Curtis D. Coburn 2-13-15
REGISTERED CIVIL ENGINEER DATE

February 20, 2015
PLANS APPROVAL DATE

REGISTERED PROFESSIONAL ENGINEER CURTIS D. COBURN No. 58431 Exp. 12-31-16 CIVIL STATE OF CALIFORNIA

THE STATE OF CALIFORNIA OR ITS OFFICERS OR AGENTS SHALL NOT BE RESPONSIBLE FOR THE ACCURACY OR COMPLETENESS OF SCANNED COPIES OF THIS PLAN SHEET.

ROADWAY QUANTITIES

LOCATION (PM)		Avg WIDTH (N)	LENGTH (N)	COLD PLANE ASPHALT CONCRETE PAVEMENT	HOT MIX ASPHALT - OPEN GRADED (BONDED WEARING COURSE)	ASPHALTIC EMULSION MEMBRANE (BONDED WEARING COURSE)	HMA (TYPE A)	TACK COAT	REMARKS
FROM	TO	LF		SQYD	TON				
35.82	35.84	46	90	460					SMITH RIVER OVERFLOW EB CONFORM - PROFILE COLD PLANE DEPTH 0.10' OVER 90'
35.84	35.85	46	40	205					SMITH RIVER OVERFLOW EB CONFORM - TRANSITION PROFILE COLD PLANE DEPTH FROM 0.10' TO 0.00' OVER 40'
35.82	35.85	46	159		61.5	0.9			
35.85	36.01	54	845		385.0	5.7			
35.96 Lt		216	86	122			119.2	0.9	LAKE EARL Dr
36.01	36.04	48	159		64.2	1.0			
36.04	36.06	34	106		30.3	0.4			
36.03	36.04	42	40	187					SMITH RIVER BB CONFORM - TRANSITION PROFILE COLD PLANE DEPTH FROM 0.00' TO 0.10' OVER 40'
36.04	36.06	34	90	340					SMITH RIVER BB CONFORM - PROFILE COLD PLANE DEPTH 0.10' OVER 90'
36.25	36.27	36	90	360					SMITH RIVER EB CONFORM - PROFILE COLD PLANE DEPTH 0.10' OVER 90'
36.27	36.28	46	40	205					SMITH RIVER EB CONFORM - TRANSITION PROFILE COLD PLANE DEPTH FROM 0.10' TO 0.00' OVER 40'
36.25	36.27	36	106		32.1	0.5			
36.27	36.29	48	106		42.8	0.6			
36.29	36.50	50	1109		467.8	6.9			
36.31 Rt		241	320	118			791.3	3.6	ROUTE 197
36.47 Lt		215	68	80			93.8	0.7	S FRED D HAIGHT Dr
36.50	36.52	43	106		38.4	0.6			
36.52	39.56	36	16052		4875.6	72.2			
38.77 Lt		49	44	52			13.9	0.1	BORO Ln
38.91 Lt		55	44	56			15.6	0.1	WILSON Ln
39.23 Lt		91	51	148			29.8	0.2	E DENNEY St
39.56	39.58	38	106		33.9	0.5			
39.58	39.63	40	265		89.2	1.3			
39.60	39.61	40	40	178					ROWDY CREEK BB CONFORM - TRANSITION PROFILE COLD PLANE DEPTH FROM 0.00' TO 0.10' OVER 40'
39.61	39.63	40	90	400					ROWDY CREEK BB CONFORM - PROFILE COLD PLANE DEPTH 0.10' OVER 90'
39.67	39.69	41	90	410					ROWDY CREEK EB CONFORM - PROFILE COLD PLANE DEPTH 0.10' OVER 90'
39.69	39.70	42	40	187					ROWDY CREEK EB CONFORM - TRANSITION PROFILE COLD PLANE DEPTH FROM 0.10' TO 0.00' OVER 40'
39.67	39.68	40	53		17.9	0.3			
39.68	39.74	42	317		112.3	1.7			
39.71 Rt		142	51	115			46.5	0.3	ROWDY CREEK Rd
39.74	39.79	47	264		104.7	1.6			
39.79	39.84	50	265		111.4	1.7			
39.82 Lt		222	89	121			126.7	0.9	N FRED D HAIGHT Dr
39.84	39.88	43	212		76.7	1.1			
39.88	39.90	36	106		32.1	0.5			
39.89	39.90	36	40	160					NORTH PROJECT CONFORM - TRANSITION PROFILE COLD PLANE DEPTH FROM 0.00' TO 0.10' OVER 40'
			TOTAL	3904	6575.9	97.5	1236.8	6.8	

(N) NOT A SEPARATE PAY ITEM. FOR INFORMATION ONLY.

SUMMARY OF QUANTITIES
Q-2

STATE OF CALIFORNIA - DEPARTMENT OF TRANSPORTATION
Caltrans® MAINTENACE DESIGN

FUNCTIONAL SUPERVISOR: ROYAL McCARTHY
CALCULATED-DESIGNED BY: JOHNATHON JACKSON
CHECKED BY: GAVIN KEATING
REVISED BY
DATE REVISED

LAST REVISION 02-03-15
DATE PLOTTED => 23-FEB-2015
TIME PLOTTED => 13:48

M

Maint	MAINTENANCE
Max	MAXIMUM
MB	METAL BEAM
MBB	METAL BEAM BARRIER
MBGR	METAL BEAM GUARD RAILING
Med	MEDIAN
MGS	MIDWEST GUARDRAIL SYSTEM
MH	MANHOLE
Min	MINIMUM
Misc	MISCELLANEOUS
Misc I & S	MISCELLANEOUS IRON AND STEEL
Mkr	MARKER
Mod	MODIFIED,
	MODIFY
Mon	MONUMENT
MP	METAL PLATE
MPGR	METAL PLATE GUARD RAILING
MR	MOVEMENT RATING
MSE	MECHANICALLY STABILIZED EMBANKMENT
Mt	MOUNTAIN, MOUNT
Mtl	MATERIAL
MVP	MAINTENANCE VEHICLE PULLOUT

N

N	NORTH
NB	NORTHBOUND
No.	NUMBER (MUST HAVE PERIOD)
Nos.	NUMBERS (MUST HAVE PERIOD)
NPS	NOMINAL PIPE SIZE
NS	NEAR SIDE
NSP	NEW STANDARD PLAN
NTS	NOT TO SCALE

O

Oblr	OBLITERATE
OC	OVERCROSSING
OD	OUTSIDE DIAMETER
OF	OUTSIDE FACE
OG	ORIGINAL GROUND
OGAC	OPEN GRADED ASPHALT CONCRETE
OGFC	OPEN GRADED FRICTION COURSE
OH	OVERHEAD
OHWM	ORDINARY HIGH WATER MARK
O-O	OUT TO OUT
Opp	OPPOSITE
OSD	OVERSIDE DRAIN

P

P	PAGE
PAP	PERFORATED ALUMINUM PIPE
PB	PULL BOX
PC	POINT OF CURVATURE,
	PRECAST
PCC	POINT OF COMPOUND CURVE,
	PORTLAND CEMENT CONCRETE
PCMS	PORTABLE CHANGEABLE MESSAGE SIGN
PCP	PERFORATED CONCRETE PIPE,
	PRESTRESSED CONCRETE PIPE
PCVC	POINT OF COMPOUND VERTICAL CURVE
PEC	PERMIT TO ENTER AND CONSTRUCT
Ped	PEDESTRIAN
Ped OC	PEDESTRIAN OVERCROSSING
Ped UC	PEDESTRIAN UNDERCROSSING
Perm Mtl	PERMEABLE MATERIAL

P continued

PG	PROFILE GRADE
PI	POINT OF INTERSECTION
PJP	PARTIAL JOINT PENETRATION
Pkwy	PARKWAY
ℙ,PL	PLATE
P/L	PROPERTY LINE
PM	POST MILE,
	TIME FROM NOON TO MIDNIGHT
PN	PAVING NOTCH
POC	POINT OF HORIZONTAL CURVE
POT	POINT OF TANGENT
POVC	POINT OF VERTICAL CURVE
PP	PIPE PILE,
	PLASTIC PIPE,
	POWER POLE
PPL	PREFORMED PERMEABLE LINER
PPP	PERFORATED PLASTIC PIPE
PRC	POINT OF REVERSE CURVE
PRF	PAVEMENT REINFORCING FABRIC
PRVC	POINT OF REVERSE VERTICAL CURVE
PS&E	PLANS, SPECIFICATIONS AND ESTIMATES
PS, P/S	PRESTRESSED
PSP	PERFORATED STEEL PIPE
PT	POINT OF TANGENCY
PVC	POLYVINYL CHLORIDE
Pvmt	PAVEMENT

Q

Qty	QUANTITY

R

R	RADIUS
R & D	REMOVE AND DISPOSE
R & S	REMOVE AND SALVAGE
R/C	RATE OF CHANGE
RCA	REINFORCED CONCRETE ARCH
RCB	REINFORCED CONCRETE BOX
RCP	REINFORCED CONCRETE PIPE
RCPA	REINFORCED CONCRETE PIPE ARCH
Rd	ROAD
Reinf	REINFORCED,
	REINFORCEMENT,
	REINFORCING
Rel	RELOCATE
Repl	REPLACEMENT
Ret	RETAINING
Rev	REVISED, REVISION
Rdwy	ROADWAY
RHMA	RUBBERIZED HOT MIX ASPHALT
Riv	RIVER
RM	ROAD-MIXED
RP	RADIUS POINT,
	REFERENCE POINT
RR	RAILROAD
RSP	ROCK SLOPE PROTECTION,
	REVISED STANDARD PLAN
Rt	RIGHT
Rte	ROUTE
RW	REDWOOD,
	RETAINING WALL
R/W	RIGHT OF WAY
Rwy	RAILWAY

S

S	SOUTH,
	SUPPLEMENT
SAE	STRUCTURE APPROACH EMBANKMENT
Salv	SALVAGE
SAPP	STRUCTURAL ALUMINUM PLATE PIPE
SB	SOUTHBOUND
SC	SAND CUSHION
SCSP	SLOTTED CORRUGATED STEEL PIPE
SD	STORM DRAIN
Sec	SECOND,
	SECTION
Sep	SEPARATION
SG	SUBGRADE
Shld	SHOULDER
Sht	SHEET
Sim	SIMILAR
₤	STATION LINE
SM	SELECTED MATERIAL
Spec	SPECIAL,
	SPECIFICATIONS
SPP	SLOTTED PLASTIC PIPE
SS	SLOPE STAKE
SSBM	STRAP AND SADDLE BRACKET METHOD
SSD	STRUCTURAL SECTION DRAIN
SSPA	STRUCTURAL STEEL PLATE ARCH
SSPP	STRUCTURAL STEEL PLATE PIPE
SSPPA	STRUCTURAL STEEL PLATE PIPE ARCH
SSRP	STEEL SPIRAL RIB PIPE
St	STREET
Sta	STATION
STBB	SINGLE THRIE BEAM BARRIER
Std	STANDARD
Str	STRUCTURE
Surf	SURFACING
SW	SIDEWALK,
	SOUND WALL
Swr	SEWER
Sym	SYMMETRICAL
S4S	SURFACE 4 SIDES

T

T	SEMI-TANGENT
Tan	TANGENT
TBB	THRIE BEAM BARRIER
Tbr	TIMBER
TC	TOP OF CURB
TCB	TRAFFIC CONTROL BOX
TCE	TEMPORARY CONSTRUCTION EASEMENT
Tel	TELEPHONE
Temp	TEMPORARY
TG	TOP OF GRADE
Tot	TOTAL
TP	TELEPHONE POLE
TPB	TREATED PERMEABLE BASE
TPM	TREATED PERMEABLE MATERIAL
Trans	TRANSITION

T continued

TS	TRANSVERSE,
	TRAFFIC SIGNAL,
	TUBULAR STEEL
Typ	TYPICAL

U

UC	UNDERCROSSING
UD	UNDERDRAIN
UG	UNDERGROUND
UON	UNLESS OTHERWISE NOTED
UP	UNDERPASS

V

V	VALVE,
	DESIGN SPEED
Var	VARIABLE,
	VARIES
VC	VERTICAL CURVE
VCP	VITRIFIED CLAY PIPE
Vert	VERTICAL
Via	VIADUCT
Vol	VOLUME

W

W	WEST,
	WIDTH
WB	WESTBOUND
WH	WEEP HOLE
WM	WIRE MESH
WS	WATER SURFACE
WSP	WELDED STEEL PIPE
Wt	WEIGHT
WV	WATER VALVE
WW	WINGWALL
WWLOL	WINGWALL LAYOUT LINE

X

X Sec	CROSS SECTION
Xing	CROSSING

Y

Yr	YEAR
Yrs	YEARS

Dist	COUNTY	ROUTE	POST MILES TOTAL PROJECT	SHEET No.	TOTAL SHEETS
01	DN	101	35.7/39.9	13	25

Grace M. Tsushima
REGISTERED CIVIL ENGINEER

July 19, 2013
PLANS APPROVAL DATE

REGISTERED PROFESSIONAL ENGINEER
Grace M. Tsushima
No. C49814
Exp. 9-30-14
CIVIL
STATE OF CALIFORNIA

THE STATE OF CALIFORNIA OR ITS OFFICERS OR AGENTS SHALL NOT BE RESPONSIBLE FOR THE ACCURACY OR COMPLETENESS OF SCANNED COPIES OF THIS PLAN SHEET.

TO ACCOMPANY PLANS DATED 02-20-15

UNIT OF MEASUREMENT SYMBOLS:

Some of the symbols used in the project plan quantity tables and in the Bid Item List are:

TABLE A

SYMBOL USED	DEFINITIONS
ACRE	ACRE
CF	CUBIC FOOT
CY	CUBIC YARD
EA	EACH
GAL	GALLON
LB	POUND
LF	LINEAR FOOT
SQFT	SQUARE FOOT
SQYD	SQUARE YARD
STA	100 FEET
TAB	TABLET
TON	2,000 POUNDS

Some of the symbols used in the plans other than in the project plan quantity tables are:

TABLE B

SYMBOL USED	DEFINITIONS
ksi	KIPS PER SQUARE INCH
ksf	KIPS PER SQUARE FOOT
psi	POUNDS PER SQUARE INCH
psf	POUNDS PER SQUARE FOOT
lb/ft^3, pcf	POUNDS PER CUBIC FOOT
tsf	TONS PER SQUARE FOOT
mph, MPH *	MILES PER HOUR
ø	NOMINAL DIAMETER
oz	OUNCE
lb	POUND
kip	1,000 POUNDS
cal	CALORIE
ft	FOOT OR FEET
gal	GALLON

* For use on a sign panel only

STATE OF CALIFORNIA
DEPARTMENT OF TRANSPORTATION

ABBREVIATIONS (SHEET 2 OF 2)

NO SCALE

RSP A10B DATED JULY 19, 2013 SUPERSEDES STANDARD PLAN A10B DATED MAY 20, 2011 - PAGE 2 OF THE STANDARD PLANS BOOK DATED 2010.

REVISED STANDARD PLAN RSP A10B

2010 REVISED STANDARD PLAN RSP A10B

P:\PROJ\01\0e440\drafting\FromMaint\va001.dgn

6-7-13

Dist	COUNTY	ROUTE	POST MILES TOTAL PROJECT	SHEET No.	TOTAL SHEETS
01	DN	101	35.7/39.9	14	25

REGISTERED CIVIL ENGINEER

April 20, 2012
PLANS APPROVAL DATE

REGISTERED PROFESSIONAL ENGINEER
Roberta L. McLaughlin
No. C40375
Exp. 3-31-13
CIVIL
STATE OF CALIFORNIA

THE STATE OF CALIFORNIA OR ITS OFFICERS OR AGENTS SHALL NOT BE RESPONSIBLE FOR THE ACCURACY OR COMPLETENESS OF SCANNED COPIES OF THIS PLAN SHEET.

TO ACCOMPANY PLANS DATED 02-20-15

2010 REVISED STANDARD PLAN RSP A24A

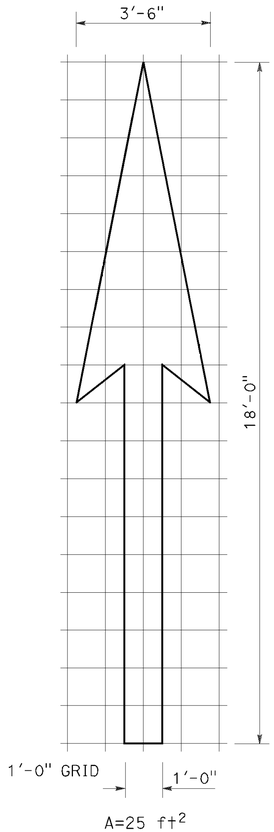

A=25 ft^2

TYPE I 18'-0" ARROW

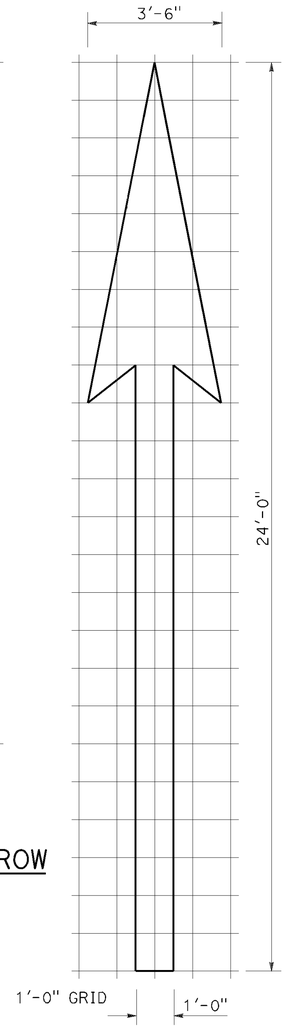

A=31 ft^2

TYPE I 24'-0" ARROW

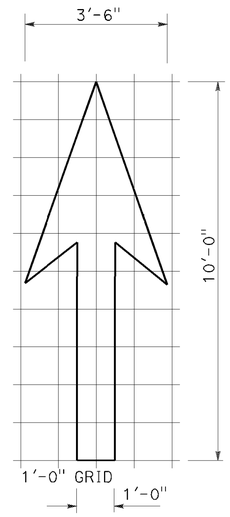

A=14 ft^2

TYPE I 10'-0" ARROW

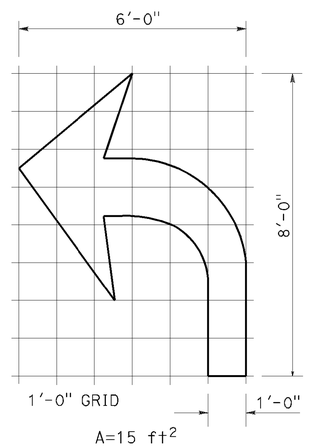

A=15 ft^2

TYPE IV (L) ARROW

(For Type IV (R) arrow, use mirror image)

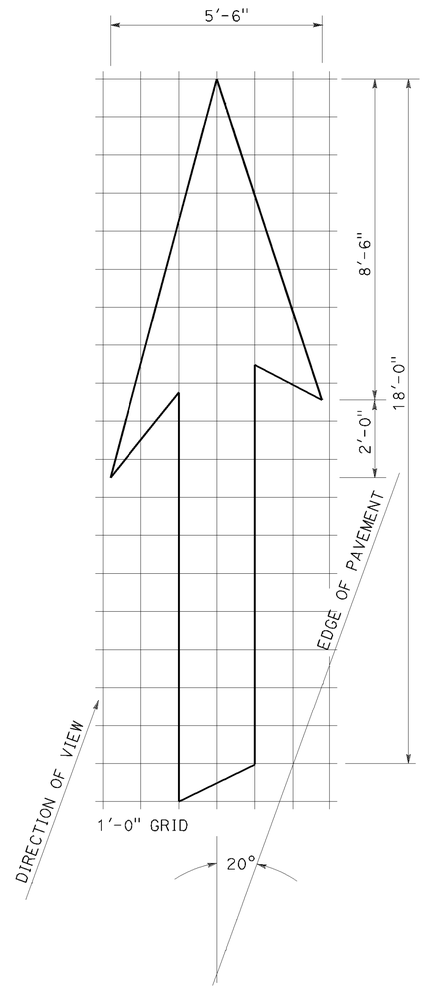

A=42 ft^2

TYPE VI ARROW

Right lane drop arrow
(For left lane, use mirror image)

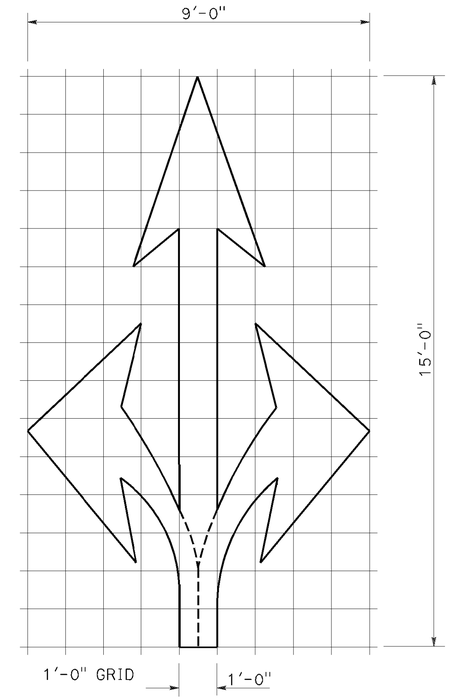

A=36 ft^2

TYPE VIII ARROW

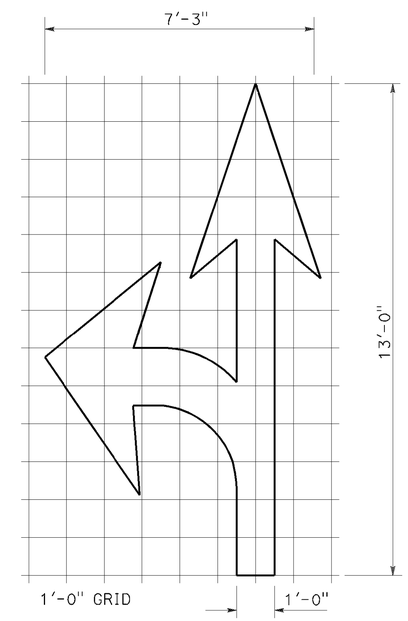

A=27 ft^2

TYPE VII (L) ARROW

(For Type VII (R) arrow, use mirror image)

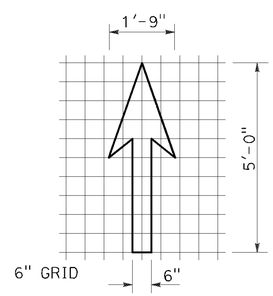

A=3.5 ft^2

BIKE LANE ARROW

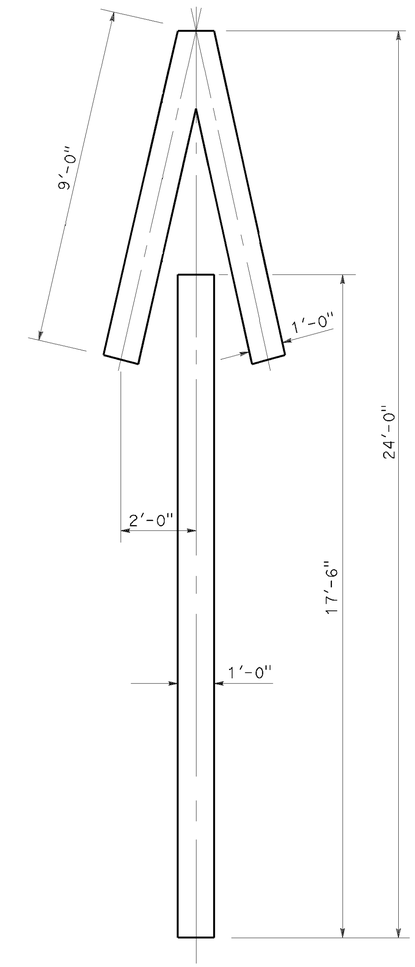

A=33 ft^2

TYPE V ARROW

NOTE:
Minor variations in dimensions may be accepted by the Engineer.

STATE OF CALIFORNIA
DEPARTMENT OF TRANSPORTATION

PAVEMENT MARKINGS ARROWS

NO SCALE

RSP A24A DATED APRIL 20, 2012 SUPERSEDES STANDARD PLAN A24A DATED MAY 20, 2011 - PAGE 13 OF THE STANDARD PLANS BOOK DATED 2010.

REVISED STANDARD PLAN RSP A24A

P:\PROJ\01\0e440\drafting\FromMaint\va002.dgn

3-14-12

Dist	COUNTY	ROUTE	POST MILES TOTAL PROJECT	SHEET No.	TOTAL SHEETS
01	DN	101	35.7/39.9	15	25

REGISTERED CIVIL ENGINEER

October 19, 2012
PLANS APPROVAL DATE

REGISTERED PROFESSIONAL ENGINEER
Roberta L. McLaughlin
No. C40375
Exp. 3-31-13
CIVIL
STATE OF CALIFORNIA

THE STATE OF CALIFORNIA OR ITS OFFICERS OR AGENTS SHALL NOT BE RESPONSIBLE FOR THE ACCURACY OR COMPLETENESS OF SCANNED COPIES OF THIS PLAN SHEET.

NOTE: TO ACCOMPANY PLANS DATED 02-20-15

Minor variations in dimensions may be accepted by the Engineer.

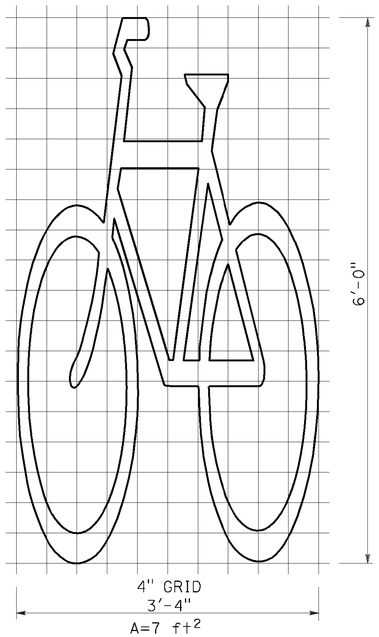

BIKE LANE SYMBOL WITHOUT PERSON

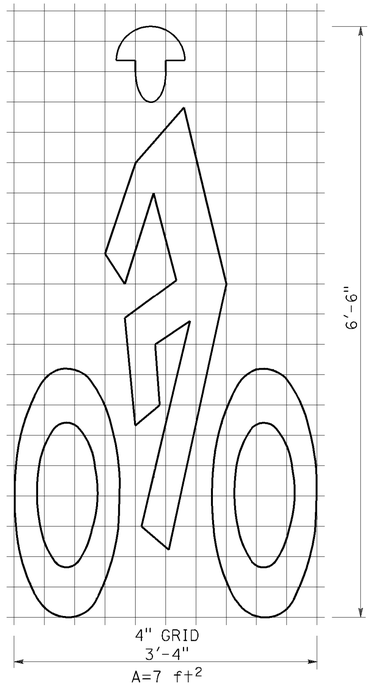

BIKE LANE SYMBOL WITH PERSON

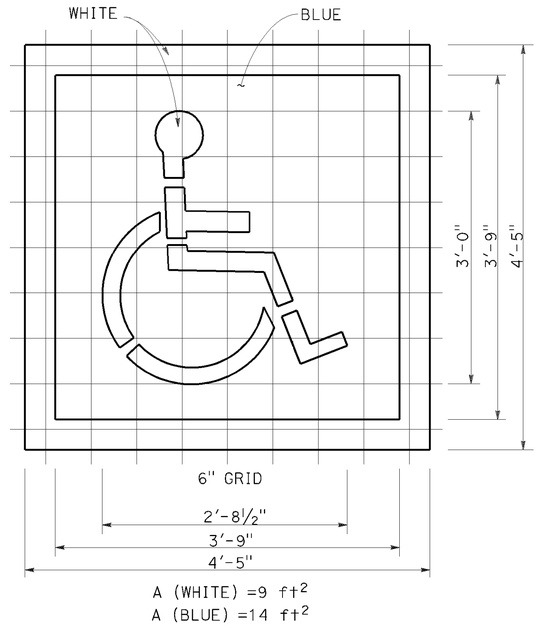

INTERNATIONAL SYMBOL OF ACCESSIBILITY (ISA) MARKING

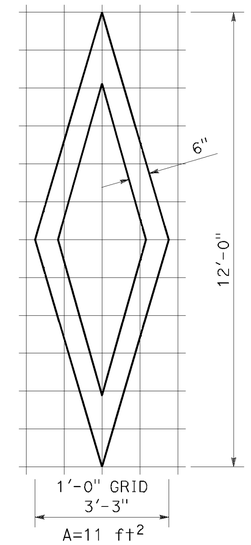

DIAMOND SYMBOL

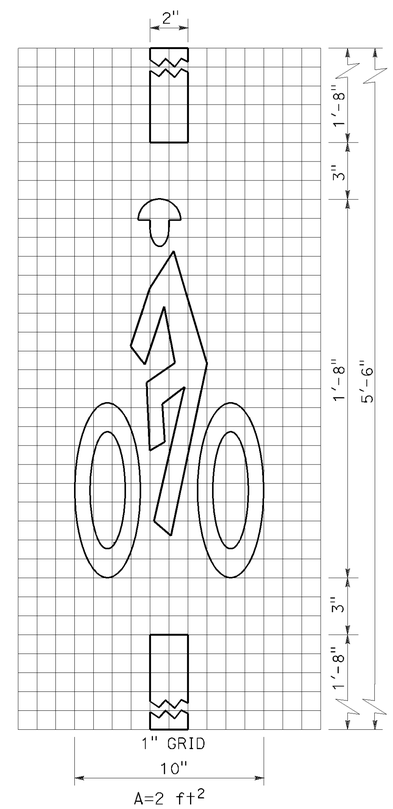

BICYCLE LOOP DETECTOR SYMBOL

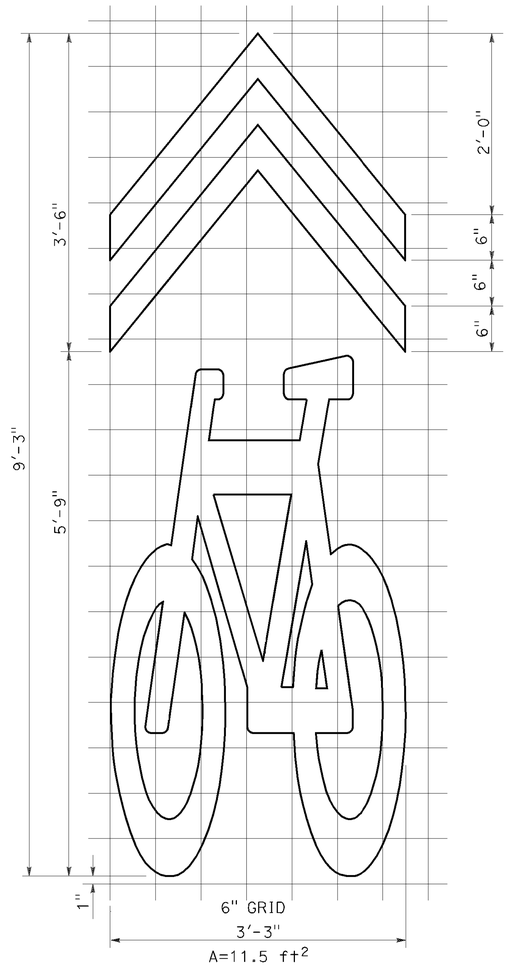

SHARED ROADWAY BICYCLE MARKING

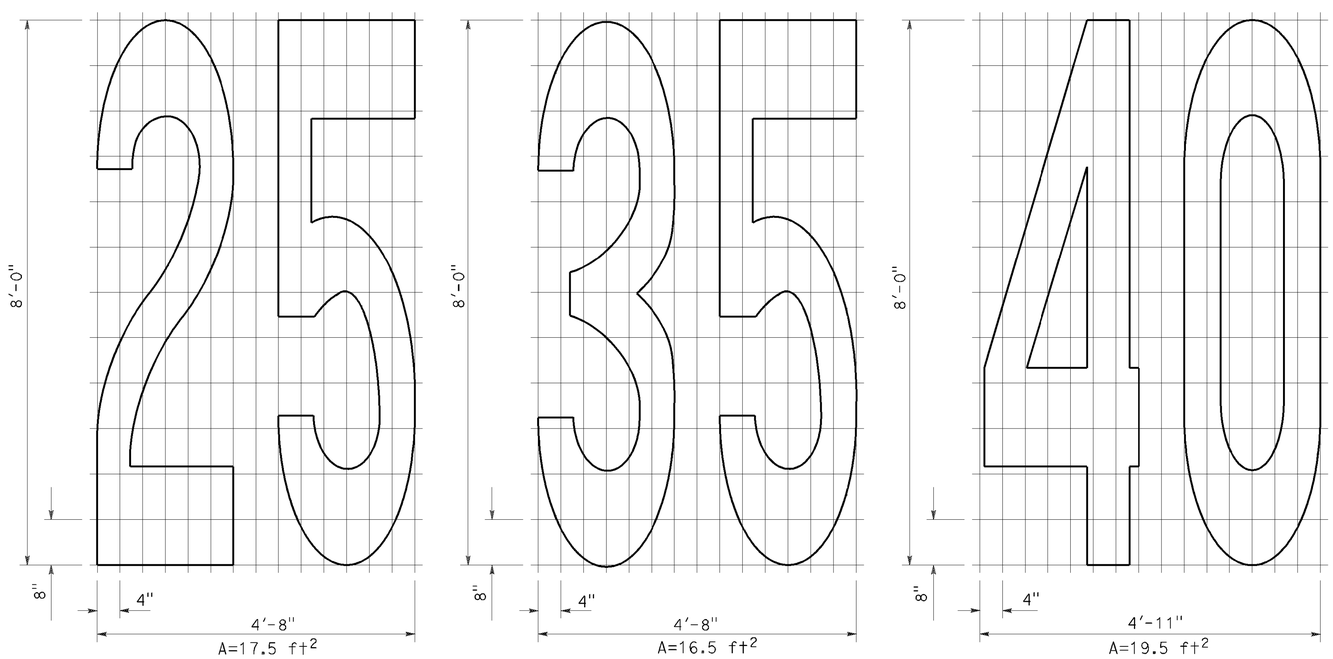

NUMERALS

STATE OF CALIFORNIA
DEPARTMENT OF TRANSPORTATION

PAVEMENT MARKINGS SYMBOLS AND NUMERALS

NO SCALE

RSP A24C DATED OCTOBER 19, 2012 SUPERSEDES STANDARD PLAN A24C DATED MAY 20, 2011 - PAGE 15 OF THE STANDARD PLANS BOOK DATED 2010.

REVISED STANDARD PLAN RSP A24C

2010 REVISED STANDARD PLAN RSP A24C

P:\PROJ\01\0e440\drafting\FromMaint\va003.dgn

6-28-12

Dist	COUNTY	ROUTE	POST MILES TOTAL PROJECT	SHEET No.	TOTAL SHEETS
01	DN	101	35.7/39.9	16	25

REGISTERED CIVIL ENGINEER

July 20, 2012
PLANS APPROVAL DATE

REGISTERED PROFESSIONAL ENGINEER
Roberta L. McLaughlin
No. C40375
Exp. 3-31-13
CIVIL
STATE OF CALIFORNIA

THE STATE OF CALIFORNIA OR ITS OFFICERS OR AGENTS SHALL NOT BE RESPONSIBLE FOR THE ACCURACY OR COMPLETENESS OF SCANNED COPIES OF THIS PLAN SHEET.

TO ACCOMPANY PLANS DATED 02-20-15

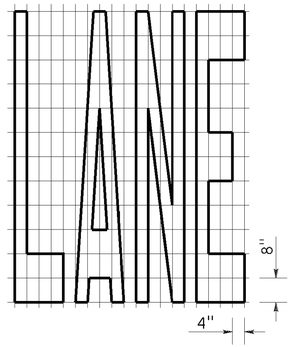

A=24 ft²

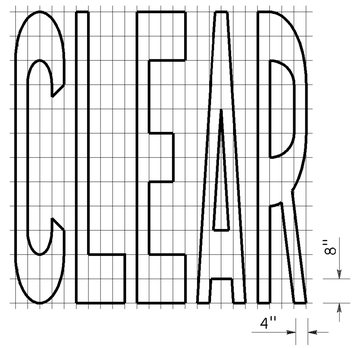

A=27 ft²

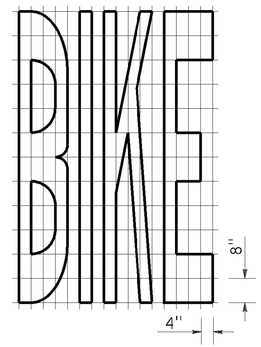

A=21 ft²

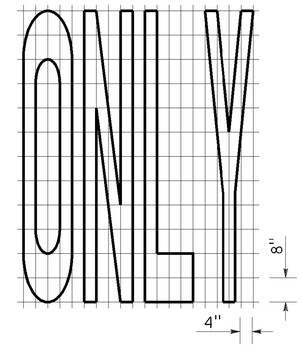

A=22 ft²

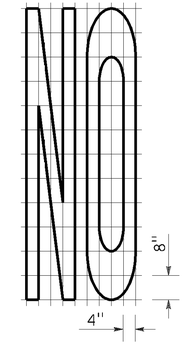

A=14 ft²

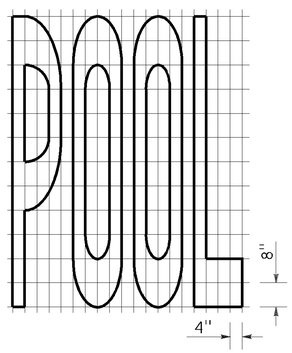

A=23 ft²

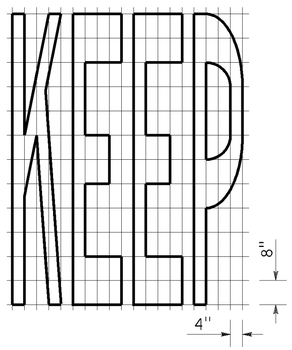

A=24 ft²

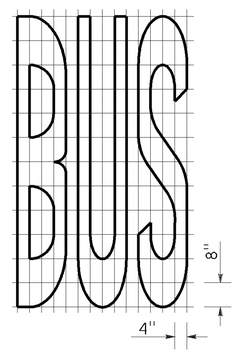

A=20 ft²

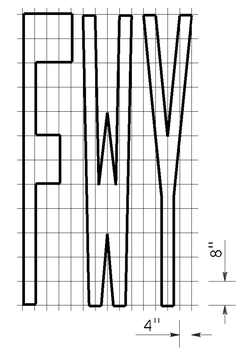

A=16 ft²

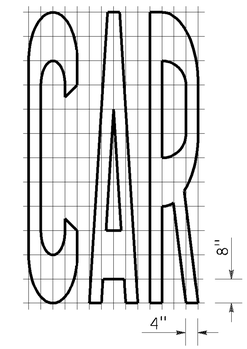

A=17 ft²

WORD MARKINGS			
ITEM	ft²	ITEM	ft²
LANE	24	NO	14
POOL	23	BIKE	21
CAR	17	BUS	20
CLEAR	27	ONLY	22
KEEP	24	FWY	16

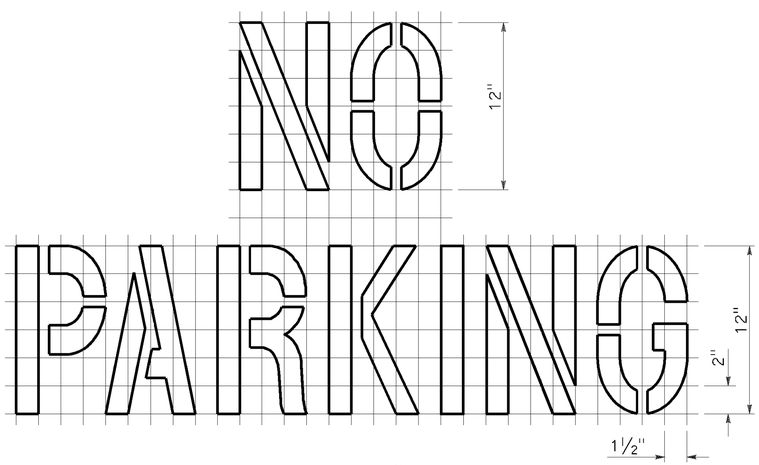

A=2 ft²
See Notes 6 and 7

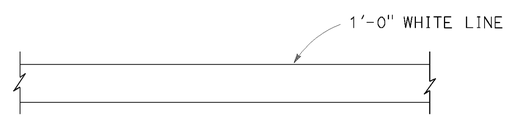

LIMIT LINE (STOP LINE)

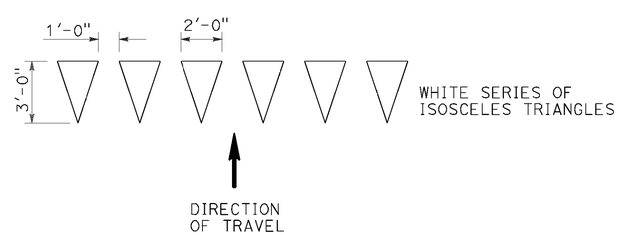

YIELD LINE

NOTES:

1. If a message consists of more than one word, it should read "UP", i.e., the first word should be nearest the driver.
2. The space between words should be at least four times the height of the characters for low speed roads, but not more than ten times the height of the characters. The space may be reduced appropriately where there is limited space because of local conditions.
3. Minor variations in dimensions may be accepted by the Engineer.
4. Portions of a letter, number or symbol may be separated by connecting segments not to exceed 2" in width.
5. The words "NO PARKING" pavement marking is to be used for parking facilities. For typical locations of markings, see Standard Plans A90A and A90B.
6. The words "NO PARKING", shall be painted in white letters no less than 1'-0" high on a contrasting background and located so that it is visible to traffic enforcement officials.

STATE OF CALIFORNIA
DEPARTMENT OF TRANSPORTATION

PAVEMENT MARKINGS WORDS, LIMIT AND YIELD LINES

NO SCALE

RSP A24E DATED JULY 20, 2012 SUPERSEDES STANDARD PLAN A24E
DATED MAY 20, 2011 - PAGE 17 OF THE STANDARD PLANS BOOK DATED 2010.

REVISED STANDARD PLAN RSP A24E

2010 REVISED STANDARD PLAN RSP A24E

P:\PROJ\01\0e440\drafting\FromMaint\va004.dgn

6-12-12

Dist	COUNTY	ROUTE	POST MILES TOTAL PROJECT	SHEET No.	TOTAL SHEETS
01	DN	101	35.7/39.9	17	25

REGISTERED CIVIL ENGINEER

July 19, 2013
PLANS APPROVAL DATE

REGISTERED PROFESSIONAL ENGINEER
Michael Janzen
No. 44788
Exp. 03-31-14
CIVIL
STATE OF CALIFORNIA

THE STATE OF CALIFORNIA OR ITS OFFICERS OR AGENTS SHALL NOT BE RESPONSIBLE FOR THE ACCURACY OR COMPLETENESS OF SCANNED COPIES OF THIS PLAN SHEET.

TO ACCOMPANY PLANS DATED 02-20-15

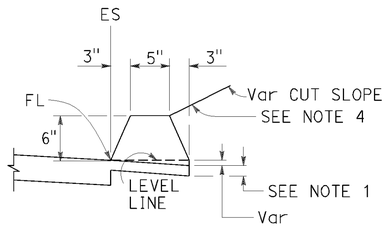

TYPE A
See Note 3

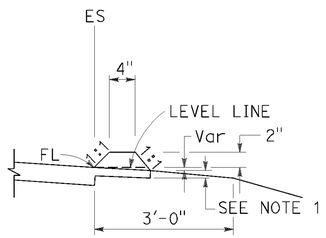

TYPE C

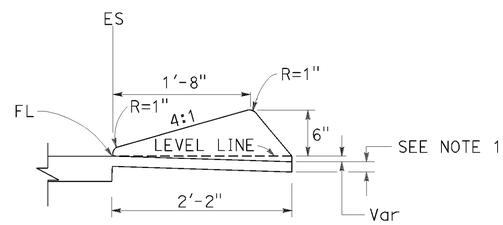

TYPE D

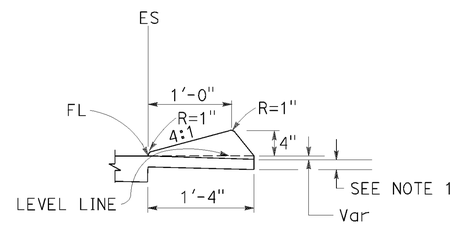

TYPE E

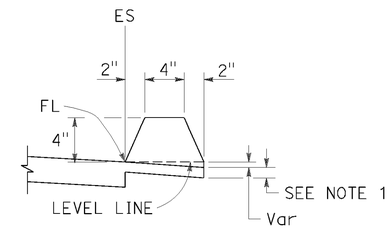

TYPE F
See Note 5

DIKES

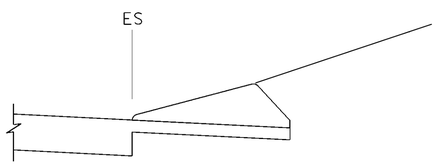

CASE C-1
Cut Slope

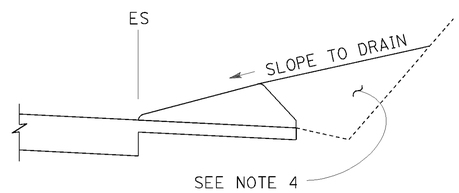

CASE C-2
Cut Slope

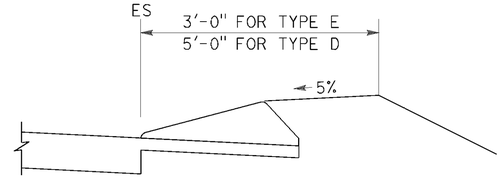

CASE F

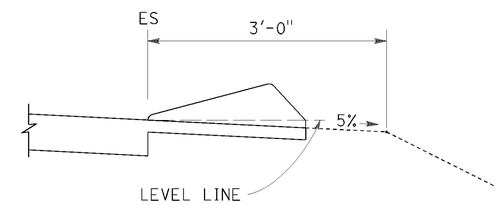

CASE R
See Note 2

TYPE D AND E BACKFILL DETAILS

NOTES:

1. For HMA shoulders only, extend top layer of HMA placed on the shoulder under dike with no joint at the ES. For projects with OGFC shoulders, do not extend OGFC under dike. See project plans for modified dike detail.
2. Case R applies to retrofit only projects where restrictive conditions do not provide enough width for Case F backfill.
3. Type A dike only to be used where restrictive slope conditions do not provide enough width to use Type D or Type E dike.
4. Fill and compact with excavated material to top of dike.
5. Use Type F dike, where dike is required with guard railing installations. See Revised Standard Plan RSP A77N4 for dike positioning details.

DIKE QUANTITIES

TYPE	CUBIC YARDS PER LINEAR FOOT
A	0.0135
C	0.0038
D	0.0293
E	0.0130
F	0.0066

Quantities based on 5% cross slope.

STATE OF CALIFORNIA
DEPARTMENT OF TRANSPORTATION

HOT MIX ASPHALT DIKES

NO SCALE

RSP A87B DATED JULY 19, 2013 SUPERSEDES STANDARD PLAN A87B
DATED MAY 20, 2011 - PAGE 120 OF THE STANDARD PLANS BOOK DATED 2010.

REVISED STANDARD PLAN RSP A87B

2010 REVISED STANDARD PLAN RSP A87B

P:\PROJ\01\0e440\drafting\FromMaint\va005.dgn

6-27-13

Dist	COUNTY	ROUTE	POST MILES TOTAL PROJECT	SHEET No.	TOTAL SHEETS
01	DN	101	35.7/39.9	18	25

Theresa Gabriel
REGISTERED ELECTRICAL ENGINEER

July 19, 2013
PLANS APPROVAL DATE

REGISTERED PROFESSIONAL ENGINEER Theresa Aziz Gabriel No. E15129 Exp. 6-30-14 ELECTRICAL STATE OF CALIFORNIA

THE STATE OF CALIFORNIA OR ITS OFFICERS OR AGENTS SHALL NOT BE RESPONSIBLE FOR THE ACCURACY OR COMPLETENESS OF SCANNED COPIES OF THIS PLAN SHEET.

TO ACCOMPANY PLANS DATED 02-20-15

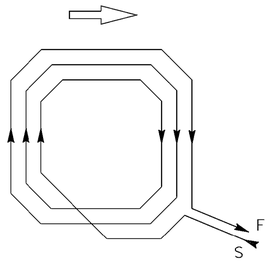

WINDING DETAIL

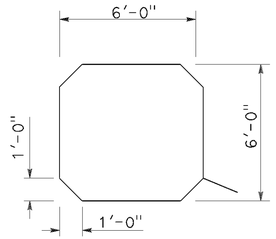

SAWCUT DETAIL

TYPE A LOOP DETECTOR CONFIGURATION

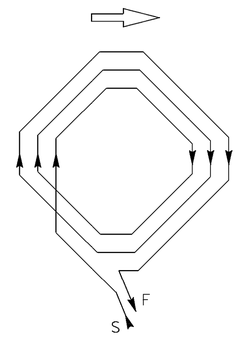

WINDING DETAIL

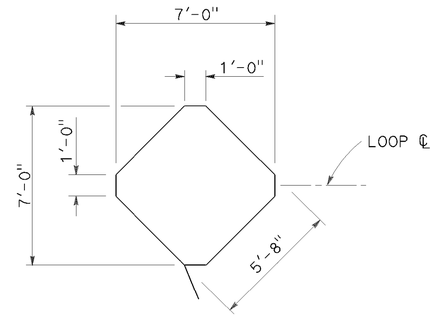

SAWCUT DETAIL

TYPE B LOOP DETECTOR CONFIGURATION

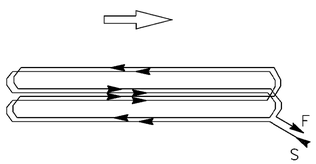

WINDING DETAIL

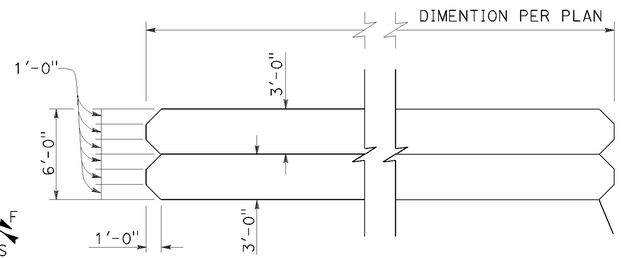

SAWCUT DETAIL

TYPE C LOOP DETECTOR CONFIGURATION

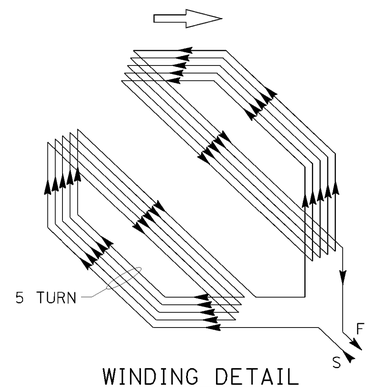

WINDING DETAIL

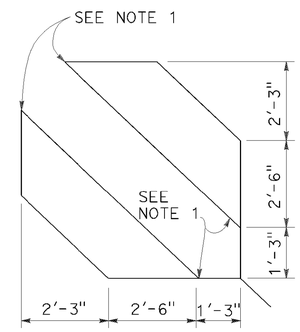

SAWCUT DETAIL

TYPE D LOOP DETECTOR CONFIGURATION

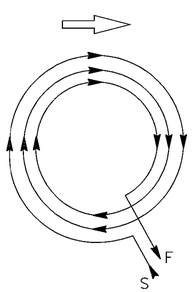

WINDING DETAIL

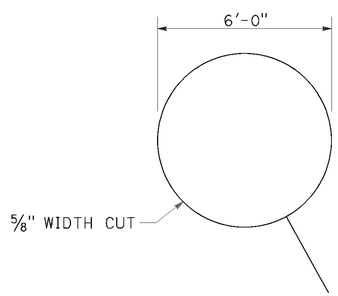

SAWCUT DETAIL

TYPE E LOOP DETECTOR CONFIGURATION

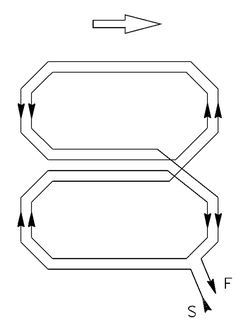

WINDING DETAIL

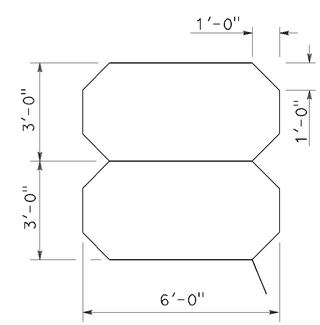

SAWCUT DETAIL

TYPE Q LOOP DETECTOR CONFIGURATION

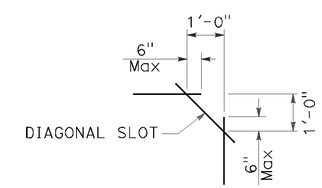

PLAN VIEW OF DIAGONAL SLOT AT CORNERS

NOTES:

1. Round corners of acute angle sawcuts to prevent damage to conductors.
2. Typical distance separating loops from edge to edge is 10' for Type A, B, D and E installation in single lane.

STATE OF CALIFORNIA
DEPARTMENT OF TRANSPORTATION

ELECTRICAL SYSTEMS (DETECTORS)

NO SCALE

RSP ES-5B DATED JULY 19, 2013 SUPERSEDES STANDARD PLAN ES-5B DATED MAY 20, 2011 - PAGE 449 OF THE STANDARD PLANS BOOK DATED 2010.

REVISED STANDARD PLAN RSP ES-5B

2010 REVISED STANDARD PLAN RSP ES-5B

P:\PROJ\01\0e440\drafting\FromMaint\va006.dgn

7-9-13

Dist	COUNTY	ROUTE	POST MILES TOTAL PROJECT	SHEET No.	TOTAL SHEETS
01	DN	101	35.7/39.9	19	25

Theresa Gabriel
REGISTERED ELECTRICAL ENGINEER

July 19, 2013
PLANS APPROVAL DATE

REGISTERED PROFESSIONAL ENGINEER
Theresa Aziz Gabriel
No. E15129
Exp. 6-30-14
ELECTRICAL
STATE OF CALIFORNIA

THE STATE OF CALIFORNIA OR ITS OFFICERS OR AGENTS SHALL NOT BE RESPONSIBLE FOR THE ACCURACY OR COMPLETENESS OF SCANNED COPIES OF THIS PLAN SHEET.

TO ACCOMPANY PLANS DATED 02-20-15

2010 REVISED STANDARD PLAN RSP ES-5C

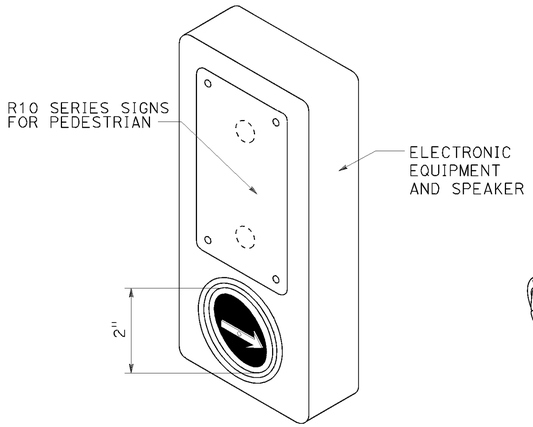

ACCESSIBLE PEDESTRIAN SIGNAL

DETAIL A
(See note 1 to 4)

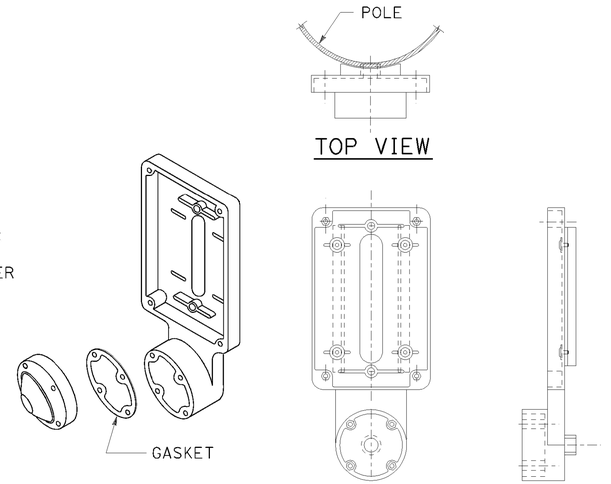

TYPE B PUSH BUTTON ASSEMBLY

DETAIL B
(See note 1 to 4)

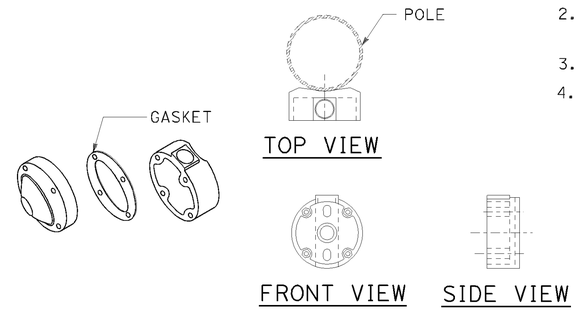

TYPE C PUSH BUTTON ASSEMBLY

DETAIL C
(See note 1 to 4)

NOTES:

1. Back casting shape to fit curvature of pole.
2. Provide cover fitting for top of post, when PBA is mounted on push button assembly post.
3. Install push button on crosswalk side of standard.
4. Use R10 series regulatory signs and plaques for pedestrian and bicycle facilities.

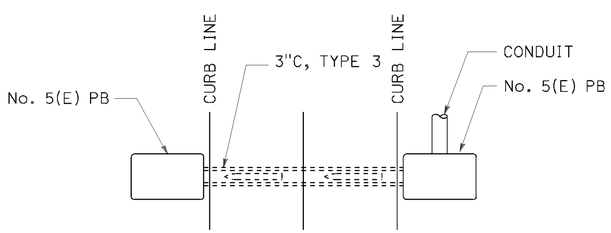

PLAN

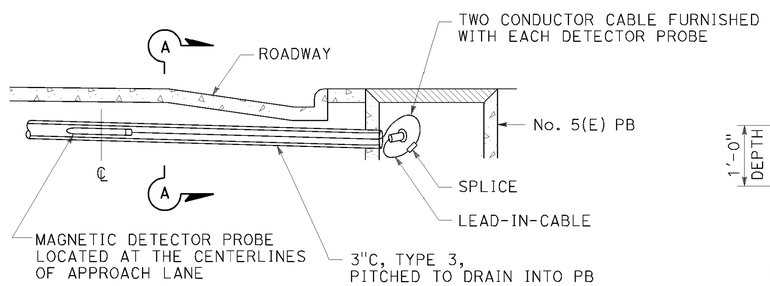

ELEVATION

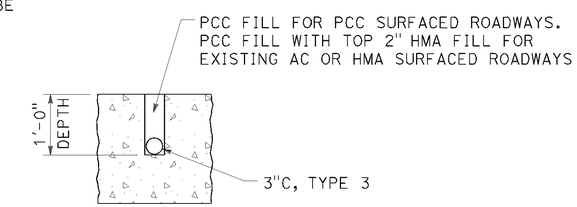

SECTION A-A

MAGNETIC VEHICLE DETECTOR INSTALLATION DETAILS

DETAIL D

STATE OF CALIFORNIA
DEPARTMENT OF TRANSPORTATION

ELECTRICAL SYSTEMS (ACCESSIBLE PEDESTRIAN SIGNAL, PUSH BUTTON ASSEMBLIES AND MAGNETIC VEHICLE DETECTOR)

NO SCALE

RSP ES-5C DATED JULY 19, 2013 SUPERSEDES STANDARD PLAN ES-5C
DATED MAY 20, 2011 - PAGE 450 OF THE STANDARD PLANS BOOK DATED 2010.

REVISED STANDARD PLAN RSP ES-5C

P:\PROJ\01\0e440\drafting\FromMaint\va007.dgn

7-9-13

Dist	COUNTY	ROUTE	POST MILES TOTAL PROJECT	SHEET No.	TOTAL SHEETS
01	DN	101	35.7/39.9	20	25

Theresa Gabriel
REGISTERED ELECTRICAL ENGINEER

July 19, 2013
PLANS APPROVAL DATE

REGISTERED PROFESSIONAL ENGINEER Theresa Aziz Gabriel No. E15129 Exp. 6-30-14 ELECTRICAL STATE OF CALIFORNIA

THE STATE OF CALIFORNIA OR ITS OFFICERS OR AGENTS SHALL NOT BE RESPONSIBLE FOR THE ACCURACY OR COMPLETENESS OF SCANNED COPIES OF THIS PLAN SHEET.

TO ACCOMPANY PLANS DATED 02-20-15

2010 REVISED STANDARD PLAN RSP ES-5D

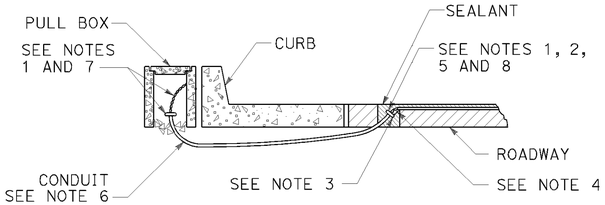

TYPE A
CURB TERMINATION DETAIL

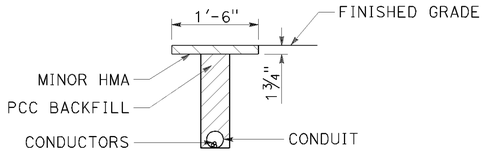

"T" TRENCH
DETAIL T

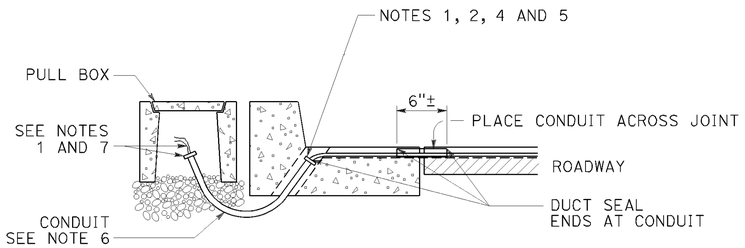

CROSS SECTION

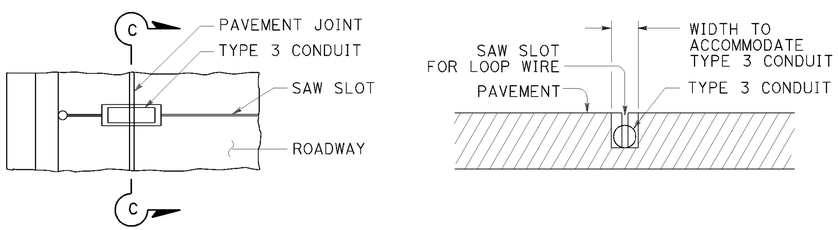

PLAN VIEW — SECTION C-C

TYPE B
CURB TERMINATION DETAIL

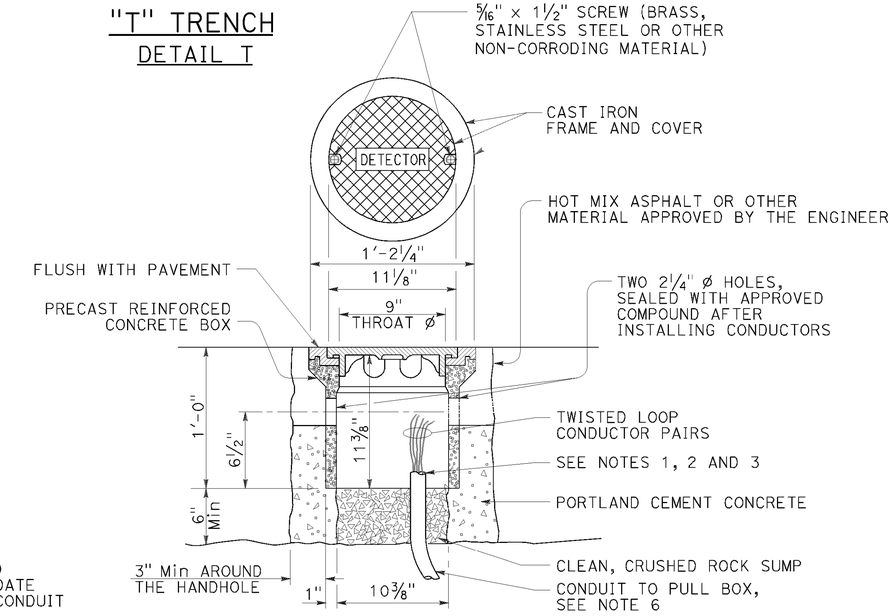

DETECTOR HANDHOLE DETAIL

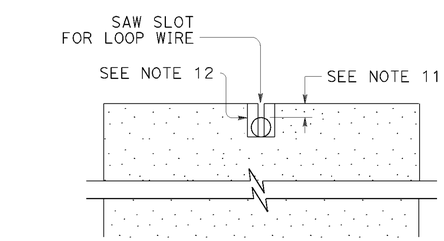

SECTION A-A

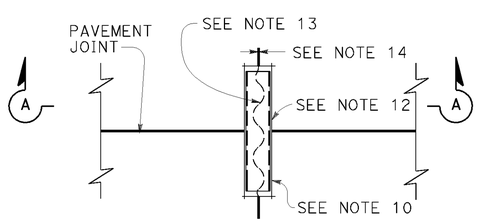

PLAN VIEW
TYPICAL LOOP LEAD-IN DETAIL AT PAVEMENT JOINT

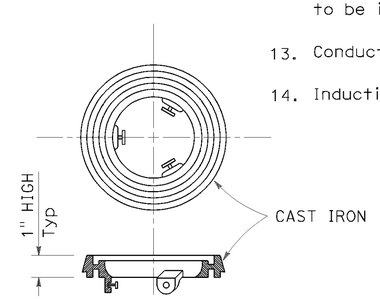

LOCKING GRADE RING

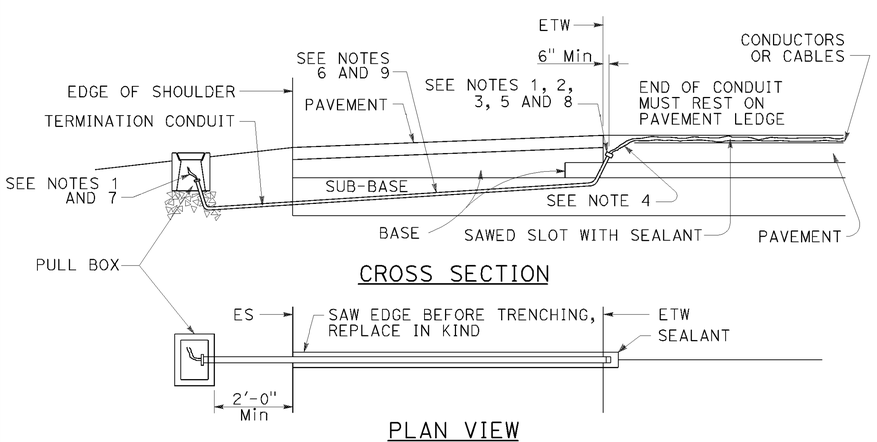

CROSS SECTION

PLAN VIEW
SHOULDER TERMINATION DETAILS

NOTES:

1. Bushing shall be used at end of conduit.
2. Tape detector conductors or cables 3" each side of bushings.
3. Install duct seal compound to each end of termination conduit before installing sealant.
4. Round all sharp edges where detector conductors or cables have to pass.
5. End of conduit shall be 3⅛" below roadway surface.
6.

Conduit size	Loop conductors
1"C minimum	1 to 2 pairs
1½"C minimum	3 to 4 pairs
2"C minimum	5 or more pairs

7. Splice detector conductors or cables to detector lead-in-cable.
8. Location of detector handhole when shown on plans.
9. When the shoulder and traveled way are paved with the same material and there is no joint between them, the conduit shall extend only 2'-0" into the shoulder pavement.
10. ¾"C, Type 3 conduit 6" long minimum, plug both ends with duct compound to keep out sealant.
11. ½" Minimum between top of conduit and pavement surface.
12. Sawcut shall not exceed 1" in width and ⅛" longer than conduit to be installed.
13. Conductors with ½" minimum slack inside conduit.
14. Inductive loop detector saw slot.

STATE OF CALIFORNIA
DEPARTMENT OF TRANSPORTATION

ELECTRICAL SYSTEMS (CURB TERMINATION AND HANDHOLE)

NO SCALE

RSP ES-5D DATED JULY 19, 2013 SUPERSEDES STANDARD PLAN ES-5D
DATED MAY 20, 2011 - PAGE 451 OF THE STANDARD PLANS BOOK DATED 2010.

REVISED STANDARD PLAN RSP ES-5D

P:\PROJ\01\0e440\drafting\FromMaint\va008.dgn

7-9-13

DIST	COUNTY	ROUTE	POST MILES TOTAL PROJECT	SHEET No.	TOTAL SHEETS
01	DN	101	35.7/39.9	21	25

REGISTERED CIVIL ENGINEER

November 15, 2013
PLANS APPROVAL DATE

REGISTERED PROFESSIONAL ENGINEER Cornelis M. Hakim No. C55610 Exp. 12-31-14 CIVIL STATE OF CALIFORNIA

THE STATE OF CALIFORNIA OR ITS OFFICERS OR AGENTS SHALL NOT BE RESPONSIBLE FOR THE ACCURACY OR COMPLETENESS OF SCANNED COPIES OF THIS PLAN SHEET.

TO ACCOMPANY PLANS DATED 02-20-15

2010 REVISED STANDARD PLAN RSP P74

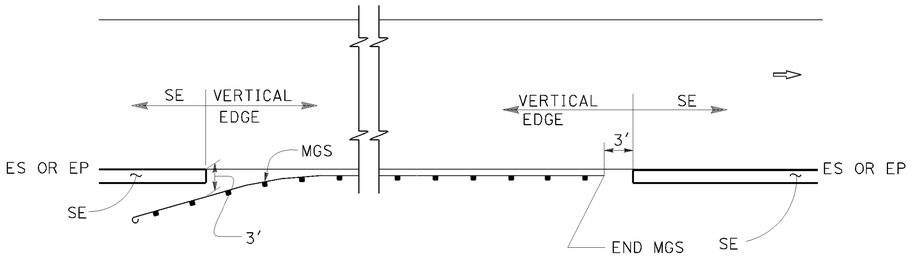

MGS

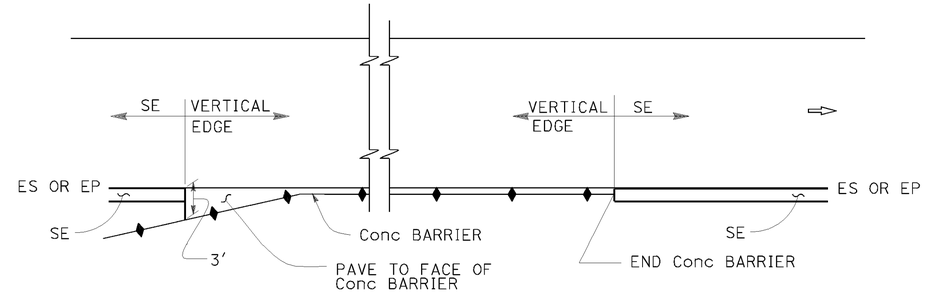

CONCRETE BARRIER

ABBREVIATIONS:

SE SAFETY EDGE

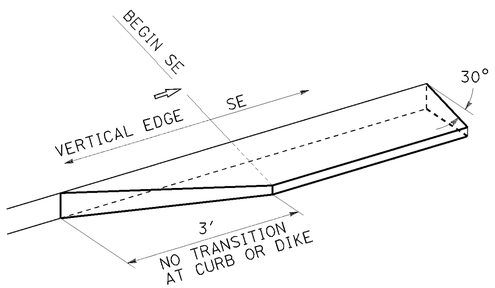

TRANSITION DETAIL FOR CONCRETE ONLY

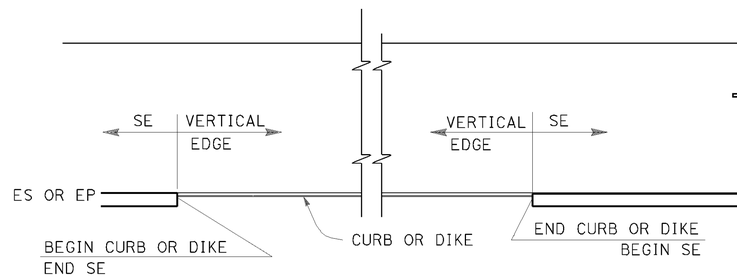

CURB OR DIKE

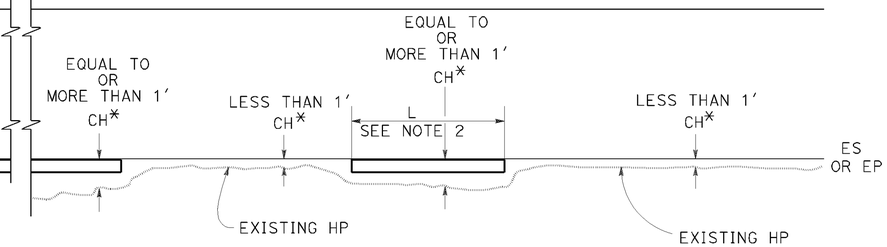

NARROW SIDE SLOPE

* CH = Distance from ES or EP to existing HP.

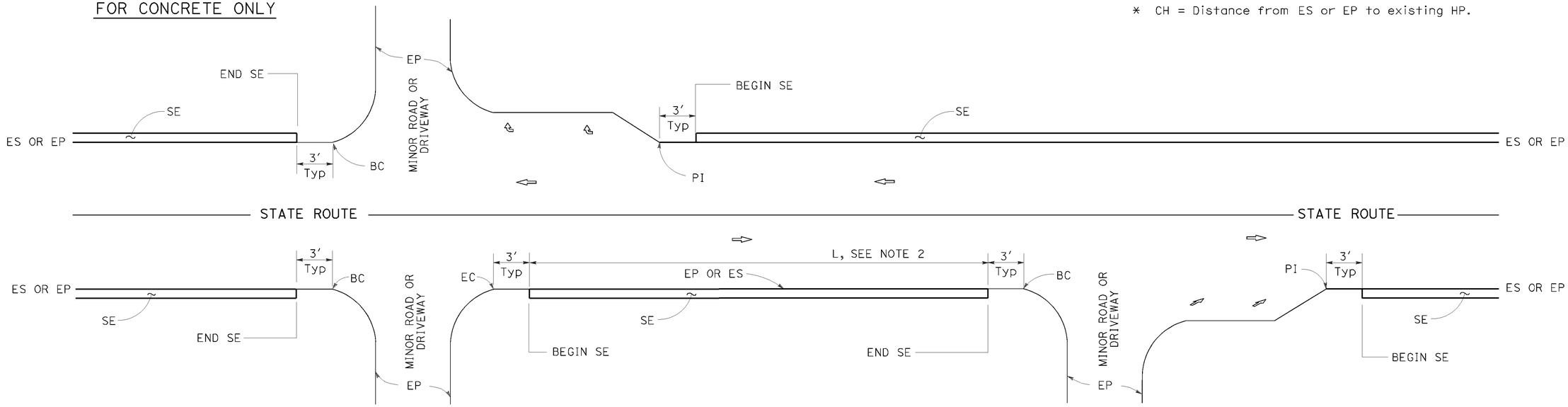

INTERSECTION

MINOR ROADWAY OR DRIVEWAY

DRIVEWAY AND INTERSECTION

NOTES:

1. For details not shown, see Revised Standard Plans RSP P75 and RSP P76.
2. Safety edge is optional when L is less than 30′.

STATE OF CALIFORNIA
DEPARTMENT OF TRANSPORTATION

PAVEMENT EDGE TREATMENTS

NO SCALE

RSP P74 DATED NOVEMBER 15, 2013 SUPERSEDES RSP P74 DATED JANUARY 20, 2012 THAT SUPPLEMENTS THE STANDARD PLANS BOOK DATED 2010.

REVISED STANDARD PLAN RSP P74

P:\PROJ\01\0e440\drafting\FromMaint\va009.dgn

10-11-13

DIST	COUNTY	ROUTE	POST MILES TOTAL PROJECT	SHEET No.	TOTAL SHEETS
01	DN	101	35.7/39.9	22	25

REGISTERED CIVIL ENGINEER

November 15, 2013
PLANS APPROVAL DATE

REGISTERED PROFESSIONAL ENGINEER Cornelis M. Hakim No. C55610 Exp. 12-31-14 CIVIL STATE OF CALIFORNIA

THE STATE OF CALIFORNIA OR ITS OFFICERS OR AGENTS SHALL NOT BE RESPONSIBLE FOR THE ACCURACY OR COMPLETENESS OF SCANNED COPIES OF THIS PLAN SHEET.

TO ACCOMPANY PLANS DATED 02-20-15

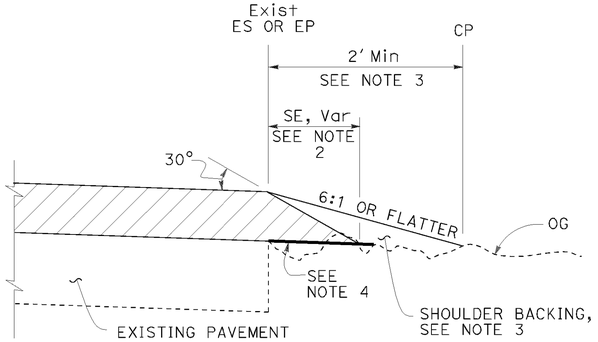

CASE A
Safety Edge

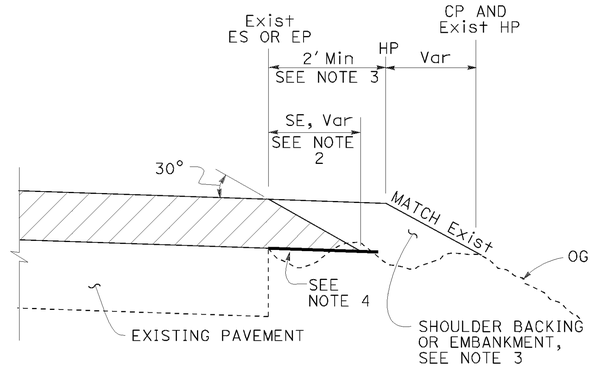

CASE B
Safety Edge

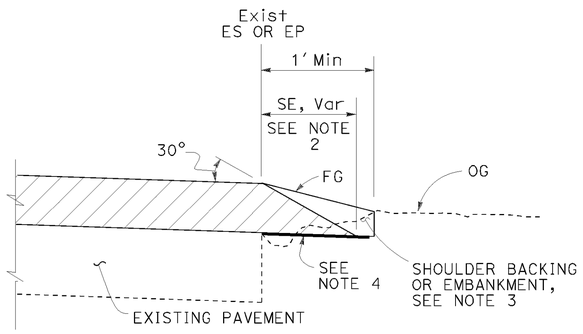

CASE C
Safety Edge

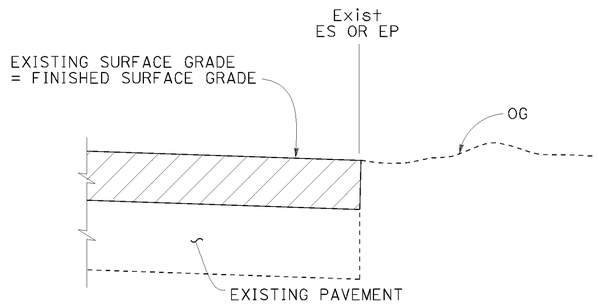

CASE D
Vertical Edge

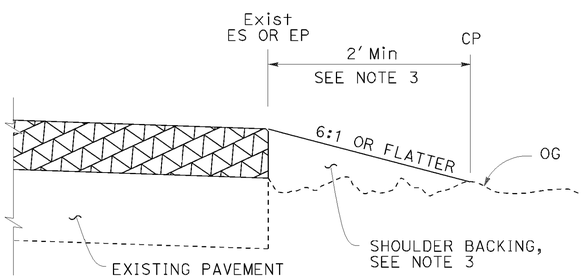

CASE E
Vertical Edge

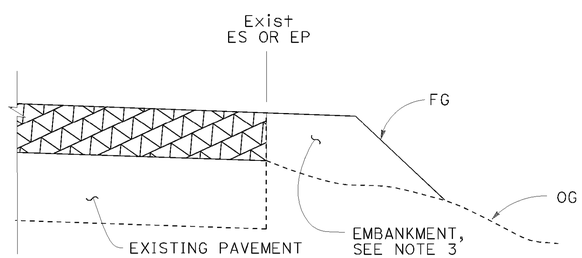

CASE F
Vertical Edge
* See Table A and Revised Std Plan RSP P74

LEGEND:

- HMA OVERLAY
- HMA OR CONCRETE OVERLAY
- CONCRETE OVERLAY

ABBREVIATIONS:

SE SAFETY EDGE
TT TOTAL THICKNESS OF SE

TABLE A
EDGE TREATMENT FOR VARIOUS OVERLAY THICKNESS AND CONDITIONS

	OVERLAY THICKNESS	
FIELD CONDITION	LESS THAN 0.15'	0.15' OR MORE
Exist SLOPE 6:1 OR FLATTER	CASE E	CASE A
Exist SLOPE 3:1 TO 6:1	CASE E	CASE B
Exist SLOPE STEEPER THAN 3:1	CASE F	CASE F
CUT SECTION (REPLACE, COLD PLANE, MILL PAVEMENT)	CASE D	CASE C

ADDITIONAL HMA OR CONCRETE QUANTITIES FOR SE/SIDE/MILE

TYPICAL CROSS SECTION	TT	TOTAL ADDITIONAL MATERIAL FOR SE/SIDE/MILE		
		HMA (TON)	CONCRETE (CY)*	CONCRETE (CY)**
TT	0.15'	NA	NA	NA
	0.20'	13.7	NA	NA
	0.30'	30.9	NA	NA
	0.40'	54.9	NA	NA
	0.45'	69.4	NA	NA
TT 0.43'	0.50'	84.2	NA	NA
	0.60'	113.9	NA	NA
	0.70'	143.6	70.9	94.2
	0.80'	173.3	85.6	112.2
	0.90'	203.0	100.3	130.2
	1.00'	232.7	114.9	148.2
	1.10'	262.4	129.6	166.2
	1.20'	292.1	144.3	184.2

* For Detail "A"
** For Optional Detail "A"

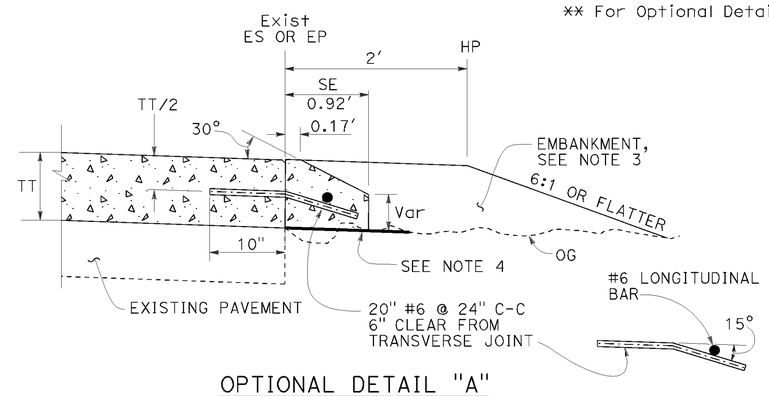

OPTIONAL DETAIL "A"
For concrete overlay
See Note 5

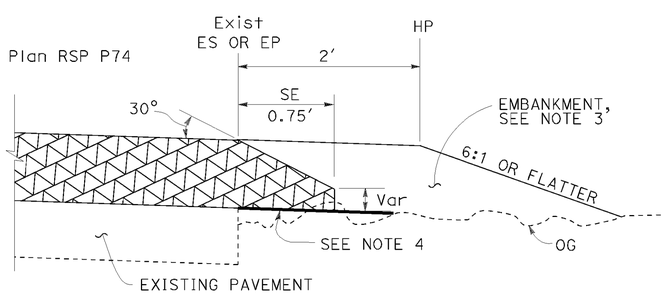

DETAIL "A"
For HMA overlay thickness more than 0.43' or concrete overlay

NOTES:

1. For limits of safety edge and vertical edge treatments, see Revised Standard Plan RSP P74.
2. Details shown for HMA overlay thickness less than 0.43'. See Detail "A" for HMA overlay thickness more than 0.43' or concrete overlay.
3. For locations and limits of shoulder backing or embankment see project plans.
4. Grade existing ground to place safety edge. 1' minimum width
5. Safety edge transverse joint must match overlay transverse joint. End of #6 longitudinal bar must be 2" ±½" clear from transverse joint.
6. Safety edge is not needed in the area of MGS, barrier, right turn lane and acceleration lane. See Revised Standard Plan RSP P74.

STATE OF CALIFORNIA
DEPARTMENT OF TRANSPORTATION

PAVEMENT EDGE TREATMENTS-OVERLAYS

NO SCALE

RSP P75 DATED NOVEMBER 15, 2013 SUPERSEDES RSP P75 DATED JANUARY 20, 2012 THAT SUPPLEMENTS THE STANDARD PLANS BOOK DATED 2010.

REVISED STANDARD PLAN RSP P75

2010 REVISED STANDARD PLAN RSP P75

P:\PROJ\01\0e440\drafting\FromMaint\va010.dgn

10-4-13

Dist	COUNTY	ROUTE	POST MILES TOTAL PROJECT	SHEET No.	TOTAL SHEETS
01	DN	101	35.7/39.9	23	25

REGISTERED CIVIL ENGINEER

July 19, 2013
PLANS APPROVAL DATE

REGISTERED PROFESSIONAL ENGINEER
Gurinderpal Bhullar
No. C48815
Exp. 9-30-14
CIVIL
STATE OF CALIFORNIA

THE STATE OF CALIFORNIA OR ITS OFFICERS OR AGENTS SHALL NOT BE RESPONSIBLE FOR THE ACCURACY OR COMPLETENESS OF SCANNED COPIES OF THIS PLAN SHEET.

TO ACCOMPANY PLANS DATED 02-20-15

2010 REVISED STANDARD PLAN RSP T9

TABLE 1

TAPER LENGTH CRITERIA AND CHANNELIZING DEVICE SPACING

SPEED (S)	MINIMUM TAPER LENGTH * FOR WIDTH OF OFFSET 12 FEET (W)				MAXIMUM CHANNELIZING DEVICE SPACING		
					X	Y	Z **
	TANGENT 2L	MERGING L	SHIFTING L/2	SHOULDER L/3	TAPER	TANGENT	CONFLICT
mph	ft	ft	ft	ft	ft	ft	ft
20	160	80	40	27	20	40	10
25	250	125	63	42	25	50	12
30	360	180	90	60	30	60	15
35	490	245	123	82	35	70	17
40	640	320	160	107	40	80	20
45	1080	540	270	180	45	90	22
50	1200	600	300	200	50	100	25
55	1320	660	330	220	55	110	27
60	1440	720	360	240	60	120	30
65	1560	780	390	260	65	130	32
70	1680	840	420	280	70	140	35

* - For other offsets, use the following merging taper length formula for L:
For speed of 40 mph or less, $L = WS^2/60$
For speed of 45 mph or more, $L = WS$

Where: L = Taper length in feet
W = Width of offset in feet
S = Posted speed limit, off-peak 85th-percentile speed prior to work starting, or the anticipated operating speed in mph

** - Use for taper and tangent sections where there are no pavement markings or where there is a conflict between existing pavement markings and channelizers (CA).

TABLE 2

LONGITUDINAL BUFFER SPACE AND FLAGGER STATION SPACING

SPEED *	Min D **	DOWNGRADE Min D ***		
		-3%	-6%	-9%
mph	ft	ft	ft	ft
20	115	116	120	126
25	155	158	165	173
30	200	205	215	227
35	250	257	271	287
40	305	315	333	354
45	360	378	400	427
50	425	446	474	507
55	495	520	553	593
60	570	598	638	686
65	645	682	728	785
70	730	771	825	891

* - Speed is posted speed limit, off-peak 85th-percentile speed prior to work starting, or the anticipated operating speed in mph

** - Longitudinal buffer space or flagger station spacing

*** - Use on sustained downgrade steeper than -3 percent and longer than 1 mile.

TABLE 3

ADVANCE WARNING SIGN SPACING

ROAD TYPE	DISTANCE BETWEEN SIGNS *		
	A	B	C
	ft	ft	ft
URBAN - 25 mph OR LESS	100	100	100
URBAN - MORE THAN 25 mph TO 40 mph	250	250	250
URBAN - MORE THAN 40 mph	350	350	350
RURAL	500	500	500
EXPRESSWAY / FREEWAY	1000	1500	2640

* - The distances are approximate, are intended for guidance purposes only, and should be applied with engineering judgment. These distances should be adjusted by the Engineer for field conditions, if necessary, by increasing or decreasing the recommmended distances.

STATE OF CALIFORNIA
DEPARTMENT OF TRANSPORTATION

TRAFFIC CONTROL SYSTEM TABLES FOR LANE AND RAMP CLOSURES

NO SCALE

RSP T9 DATED JULY 19, 2013 SUPERSEDES RSP T9 DATED APRIL 19, 2013 THAT SUPPLEMENTS THE STANDARD PLANS BOOK DATED 2010.

REVISED STANDARD PLAN RSP T9

P:\PROJ\01\0e440\drafting\FromMaint\va011.dgn

4-30-13

TO ACCOMPANY PLANS DATED 02-20-15

Dist	COUNTY	ROUTE	POST MILES TOTAL PROJECT	SHEET No.	TOTAL SHEETS
01	DN	101	35.7/39.9	24	25

REGISTERED CIVIL ENGINEER

April 19, 2013
PLANS APPROVAL DATE

REGISTERED PROFESSIONAL ENGINEER Gurinderpal Bhullar No. C48815 Exp. 9-30-14 CIVIL STATE OF CALIFORNIA

THE STATE OF CALIFORNIA OR ITS OFFICERS OR AGENTS SHALL NOT BE RESPONSIBLE FOR THE ACCURACY OR COMPLETENESS OF SCANNED COPIES OF THIS PLAN SHEET.

NOTES:

See Revised Standard Plan RSP T9 for tables.

Use cone spacing X for taper segment, Y for tangent segment or Z for conflict situations, as approriate, per Table 1, unless X, Y, or Z cone spacing is shown on this sheet.

Unless otherwise specified in the special provisions, all temporary warning signs shall have black legend on fluorescent orange background.

California codes are designated by (CA). Otherwise, Federal (MUTCD) codes are shown.

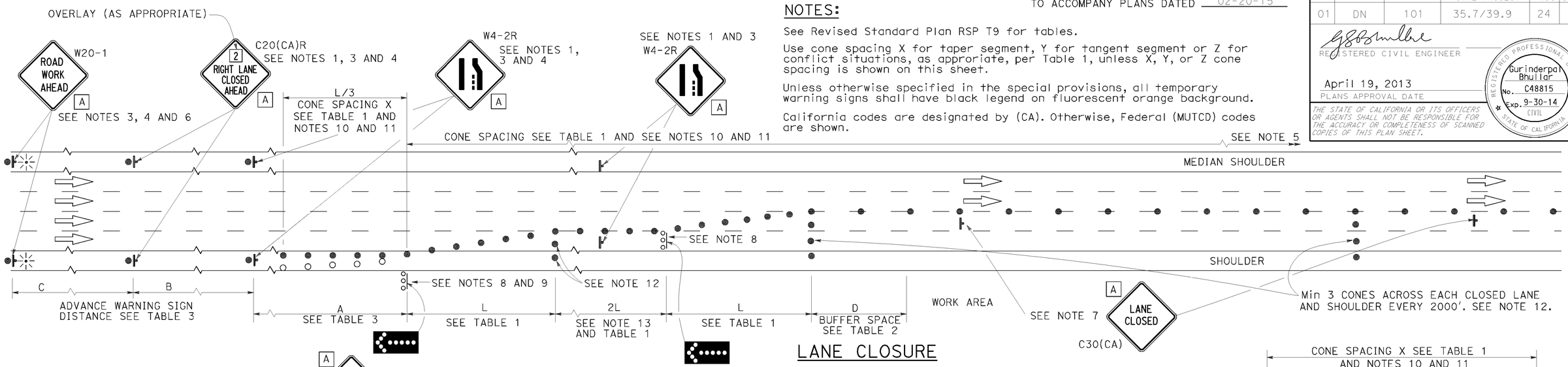

LANE CLOSURE

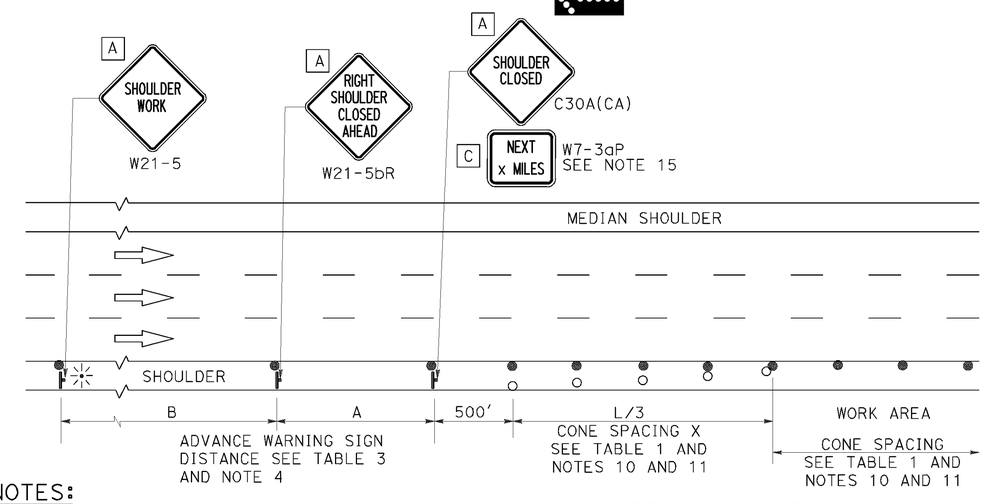

SHOULDER CLOSURE

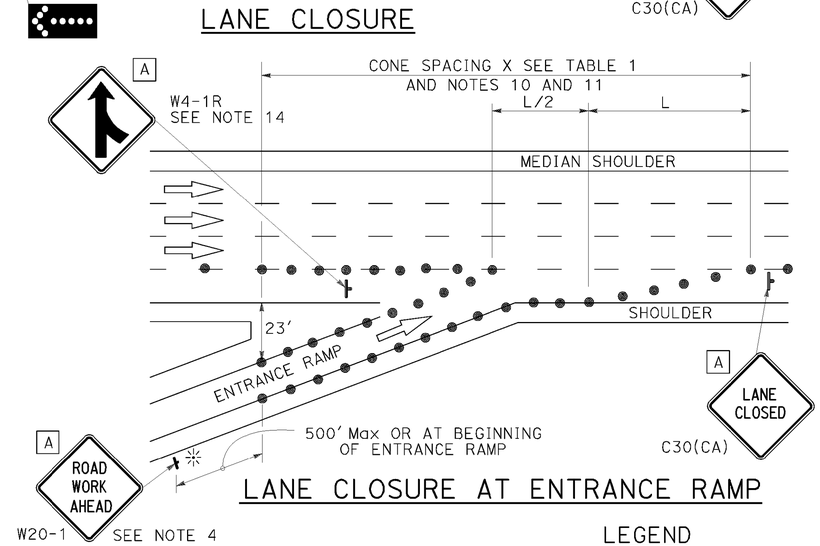

LANE CLOSURE AT ENTRANCE RAMP

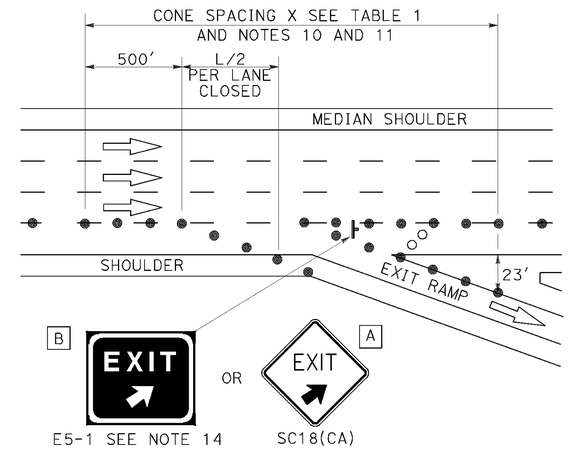

LANE CLOSURE AT EXIT RAMP

NOTES:

1. Median lane closures shall conform to the details as shown except that C20(CA)L and W4-2L signs shall be used.
2. At least one person shall be assigned to provide full time maintenance of traffic control devices for lane closures.
3. Duplicate sign installations are not required:
   a) On opposite shoulder if at least one-half of the available lanes remain open to traffic.
   b) In the median if the width of the median shoulder is less than 8' and the outside lanes are to be closed.
4. Each advance warning sign on each side of the roadway shall be equipped with at least two flags for daytime closure. Each flag shall be at least 16" x 16" in size and shall be orange or fluorescent red-orange in color. Flashing beacons shall be placed at the locations indicated for lane closure during hours of darkness.
5. A G20-2 "END ROAD WORK" sign, with minimum size of 48" x 24" as appropriate, shall be placed at the end of the lane closure unless the end of work area is obvious or ends within a larger project's limits.
6. If the W20-1 sign would follow within 2000' of a stationary W20-1 or G20-1 "ROAD WORK NEXT _____ MILES", use a C20(CA) sign for the first advance warning sign.
7. Place a C30(CA) sign every 2000' throughout length of lane closure.
8. One flashing arrow sign for each lane closed. The flashing arrow signs shall be Type I.
9. A minimum 1500' of sight distance shall be provided where possible for vehicles approaching the first flashing arrow sign. Lane closures shall not begin at top of crest vertical curve or on a horizontal curve.
10. All cones used for lane closures during the hours of darkness shall be fitted with retroreflective bands (or sleeves) as specified in the specifications.
11. Portable delineators, placed at one-half the spacing indicated for traffic cones may be used instead of cones for daytime closures only.
12. Unless otherwise specified in the special provisions, a minimum of 3 cones shall be placed transversely across each closed lane and shoulder at each location where a taper across a traffic lane ends and every 2000' as shown on the "Lane Closure" detail. Two Type II barricades may be used instead of the 3 cones. The transverse alignment of the cones or barricades on the closed shoulder may be shifted from the transverse alignment to provide access to the work.
13. Unless otherwise specified in the special provisions, the 2L tangent shown along lane lines shall be used between the L tapers required for each closed traffic lane.
14. Unless otherwise specified in the special provisions, the E5-1 or SC18(CA) and W4-1 signs shall be used as shown.
15. A W7-3aP "NEXT____ MILES" plaque must be used if theshoulder closure extends beyond the distance that can be perceived by road users.

LEGEND

- TRAFFIC CONE
- TRAFFIC CONE (OPTIONAL TAPER)
- TEMPORARY TRAFFIC CONTROL SIGN
- FLASHING ARROW SIGN (FAS)
- FAS SUPPORT OR TRAILER
- PORTABLE FLASHING BEACON

SIGN PANEL SIZE (Min)

A	48" x 48"
B	72" x 60"
C	36" x 30"

STATE OF CALIFORNIA
DEPARTMENT OF TRANSPORTATION

TRAFFIC CONTROL SYSTEM FOR LANE CLOSURE ON FREEWAYS AND EXPRESSWAYS

NO SCALE

RSP T10 DATED APRIL 19, 2013 SUPERSEDES STANDARD PLAN T10 DATED MAY 20, 2011 - PAGE 237 OF THE STANDARD PLANS BOOK DATED 2010.

REVISED STANDARD PLAN RSP T10

2010 REVISED STANDARD PLAN RSP T10

P:\PROJ\01\0e440\drafting\FromMaint\va012.dgn

12-18-12

Dist	COUNTY	ROUTE	POST MILES TOTAL PROJECT	SHEET No.	TOTAL SHEETS
01	DN	101	35.7/39.9	25	25

REGISTERED CIVIL ENGINEER

April 19, 2013
PLANS APPROVAL DATE

REGISTERED PROFESSIONAL ENGINEER Gurinderpal Bhullar No. C48815 Exp. 9-30-14 CIVIL STATE OF CALIFORNIA

THE STATE OF CALIFORNIA OR ITS OFFICERS OR AGENTS SHALL NOT BE RESPONSIBLE FOR THE ACCURACY OR COMPLETENESS OF SCANNED COPIES OF THIS PLAN SHEET.

TO ACCOMPANY PLANS DATED 02-20-15

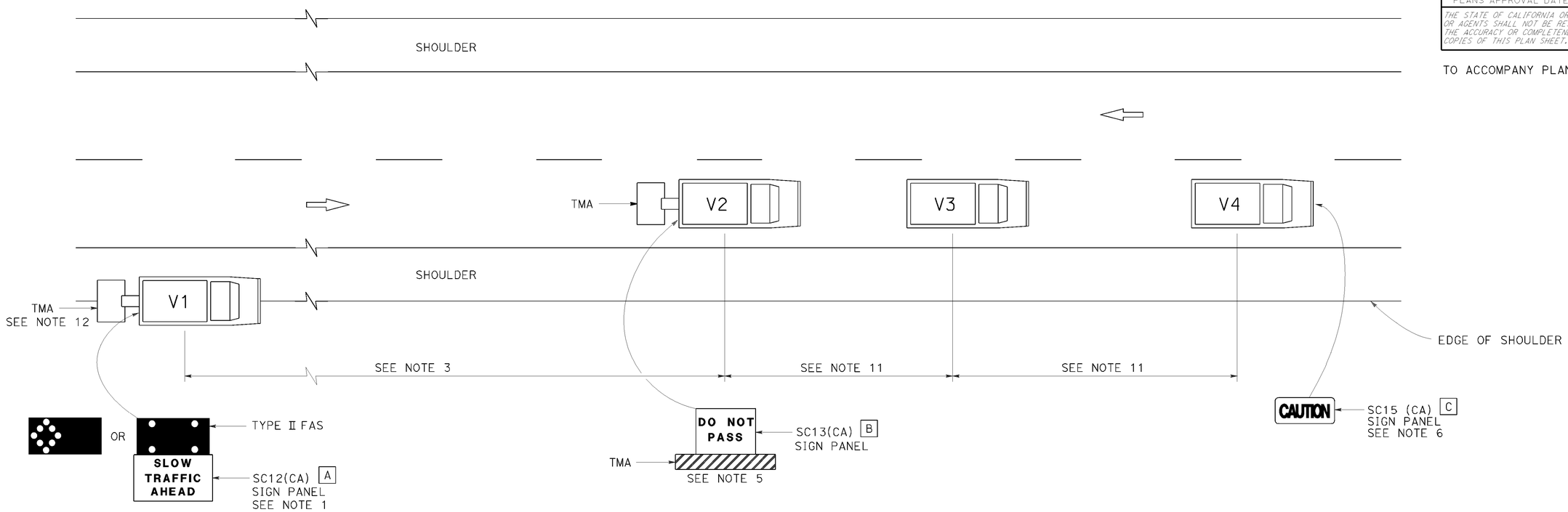

LEGEND

V1	SIGN VEHICLE
V2	SHADOW VEHICLE
V3	WORK/APPLICATION VEHICLE
V4	SIGN VEHICLE
TMA	TRUCK-MOUNTED ATTENUATOR
	FLASHING ARROW SIGN (FAS) IN FLASHING CAUTION MODE
	FLASHING ARROW SIGN (FAS) IN ALTERNATING DIAMOND CAUTION

SIGN PANEL SIZE (Min)

A	72" × 42"
B	54" × 42"
C	54" × 24"

NOTES:

1. Either a changeable message sign or a SC12(CA) "SLOW TRAFFIC AHEAD" sign shall be mounted on the rear of sign vehicle V1. The changeable message sign shall be sequenced to show the "CAUTION" message first, follow by the "SLOW TRAFFIC AHEAD" message. A Type II flashing arrow sign may be used with the SC12(CA) sign panel.
2. Sign vehicle V1 should be positioned where highly visible when shoulders are not available.
3. If traffic queues develop, sign vehicle V1 should be positioned upstream from the end of queue.
4. Vehicle-mounted sign panels shall have Type III or above retroreflective sheeting, black on white, or black on fluorescent orange, with 6" minimum series D letters per Caltrans sign specifications.
5. Shadow vehicle shall be equipped with a truck-mounted attenuator. The sign panel shown shall be mounted on the rear of shadow vehicle V2. The message "LANE CLOSED" may be used in place of the "DO NOT PASS" message.
6. The sign panel shown shall be mounted on the front of sign vehicle V4, facing opposing traffic.
7. All vehicles shall be equipped with flashing or rotating amber lights.
8. Sign vehicle V4 will not be required when the work and vehicles V2 and V3 are 2' or more from the centerline of the highway during the work or application operations.
9. All vehicles used for lane closures shall be equipped with two-way radios and the vehicle operators shall maintain communication during the work or application operation.
10. This plan shall not be used where workers would be on foot in the work area. Use a stationary type lane closure (Revised Standard Plan T13) for this condition.
11. Minimize spacing between vehicles V2 and V3 and vehicles V3 and V4 to deter road users from driving in between them.
12. If sign vehicle V1 encroaches into the traffic lane due to insufficient shoulder width, sign vehicle V1 shall be equipped with a truck-mounted attenuator. Sign vehicle V1 shall stay as close to the edge of shoulder as practicable.

STATE OF CALIFORNIA
DEPARTMENT OF TRANSPORTATION

TRAFFIC CONTROL SYSTEM FOR MOVING LANE CLOSURE ON TWO LANE HIGHWAYS

NO SCALE

RSP T17 DATED APRIL 19, 2013 SUPERSEDES STANDARD PLAN T17
DATED MAY 20, 2011 - PAGE 245 OF THE STANDARD PLANS BOOK DATED 2010.

REVISED STANDARD PLAN RSP T17

2010 REVISED STANDARD PLAN RSP T17

P:\PROJ\01\0e440\drafting\FromMaint\va013.dgn

12-18-12