ACSTP-ER-19B7(004)E

Dist	COUNTY	ROUTE	POST MILES TOTAL PROJECT	SHEET No.	TOTAL SHEETS
01	DN	101	21.9	1	55

STATE OF CALIFORNIA

DEPARTMENT OF TRANSPORTATION

PROJECT PLANS FOR CONSTRUCTION ON

STATE HIGHWAY

IN DEL NORTE COUNTY
8.3 MILES NORTH OF
WILSON CREEK BRIDGE

TO BE SUPPLEMENTED BY STANDARD PLANS DATED 2010

INDEX OF PLANS

SHEET No.	DESCRIPTION
1	TITLE AND LOCATION MAP
2	TYPICAL CROSS SECTIONS
3	LAYOUT
4-5	CONSTRUCTION DETAILS
6	CONSTRUCTION AREA SIGNS
7	STAGE CONSTRUCTION PLAN
8	TRAFFIC HANDLING PLAN
9	SUMMARY OF QUANTITIES
10-11	EROSION CONTROL PLAN, TABLES AND QUANTITIES
12-15	ELECTRICAL PLANS, DETAILS AND QUANTITIES
16-37	REVISED STANDARD PLANS
	STRUCTURE PLANS
38-55	GENERAL PLAN AND DETAILS

THE STANDARD PLANS LIST APPLICABLE TO THIS CONTRACT IS INCLUDED IN THE NOTICE TO BIDDERS AND SPECIAL PROVISIONS BOOK.

LOCATION MAP

LOCATION OF CONSTRUCTION
PM 21.9

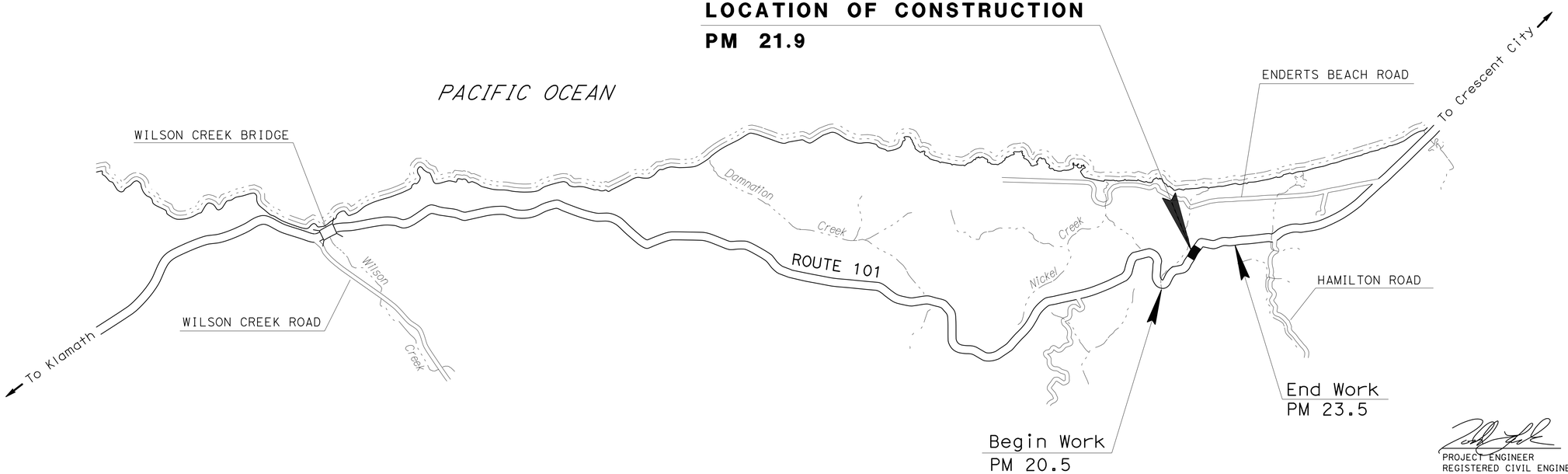

PROJECT ENGINEER
REGISTERED CIVIL ENGINEER

4/30/15
DATE

REGISTERED PROFESSIONAL ENGINEER
T. LARK
No. 52481
Exp. 12/31/16
CIVIL
STATE OF CALIFORNIA

May 1, 2015
PLANS APPROVAL DATE

THE STATE OF CALIFORNIA OR ITS OFFICERS OR AGENTS SHALL NOT BE RESPONSIBLE FOR THE ACCURACY OR COMPLETENESS OF SCANNED COPIES OF THIS PLAN SHEET.

THE CONTRACTOR SHALL POSSESS THE CLASS (OR CLASSES) OF LICENSE AS SPECIFIED IN THE "NOTICE TO BIDDERS."

NO SCALE

CONTRACT No.	01-0B3004
PROJECT ID	0112000114

P:\PROJ\01\0B300\drafting\01_0B300\0112000114lab001.dgn

DESIGN MANAGER: L. R. ASHLEY
PROJECT MANAGER: TALITHA HODGSON

LAST REVISION 04-21-15
DATE PLOTTED => 06-JUL-2015
TIME PLOTTED => 12:00

Dist	COUNTY	ROUTE	POST MILES TOTAL PROJECT	SHEET No.	TOTAL SHEETS
01	DN	101	21.9	2	55

REGISTERED CIVIL ENGINEER 4/30/15 DATE

May 1, 2015
PLANS APPROVAL DATE

REGISTERED PROFESSIONAL ENGINEER T. LARK No. 52481 Exp. 12/31/16 CIVIL STATE OF CALIFORNIA

THE STATE OF CALIFORNIA OR ITS OFFICERS OR AGENTS SHALL NOT BE RESPONSIBLE FOR THE ACCURACY OR COMPLETENESS OF SCANNED COPIES OF THIS PLAN SHEET.

NOTES:

1. DIMENSIONS OF THE PAVEMENT STRUCTURES (STRUCTURAL SECTIONS) ARE SUBJECT TO TOLERANCES SPECIFIED IN THE STANDARD SPECIFICATIONS.
2. SUPERELEVATIONS ARE SHOWN ON THE SUPERELEVATION DIAGRAMS.
3. FOR LOCATIONS OF MBGR, SEE LAYOUT AND SUMMARY OF QUANTITY SHEETS.
4. FOR ACCURATE RIGHT OF WAY DATA, CONTACT RIGHT OF WAY ENGINEERING AT THE DISTRICT OFFICE.

ABBREVIATIONS:

SR	SUPERELEVATION RATE
GPI	GEOSYNTHETIC PAVEMENT INTERLAYER
EPS	EXPANDED POLYSTYRENE
LL	LANE LINE

DESIGN DESIGNATION (ROUTE 101)

ADT (2015) 4,990	D 60%
ADT (2035) 5,950	T 8%
DHV (2015) = 740	V 55 mph
$ESAL_{20}$ =2,424,000	TI_{20} 10.0

CLIMATE REGION
NORTH COAST

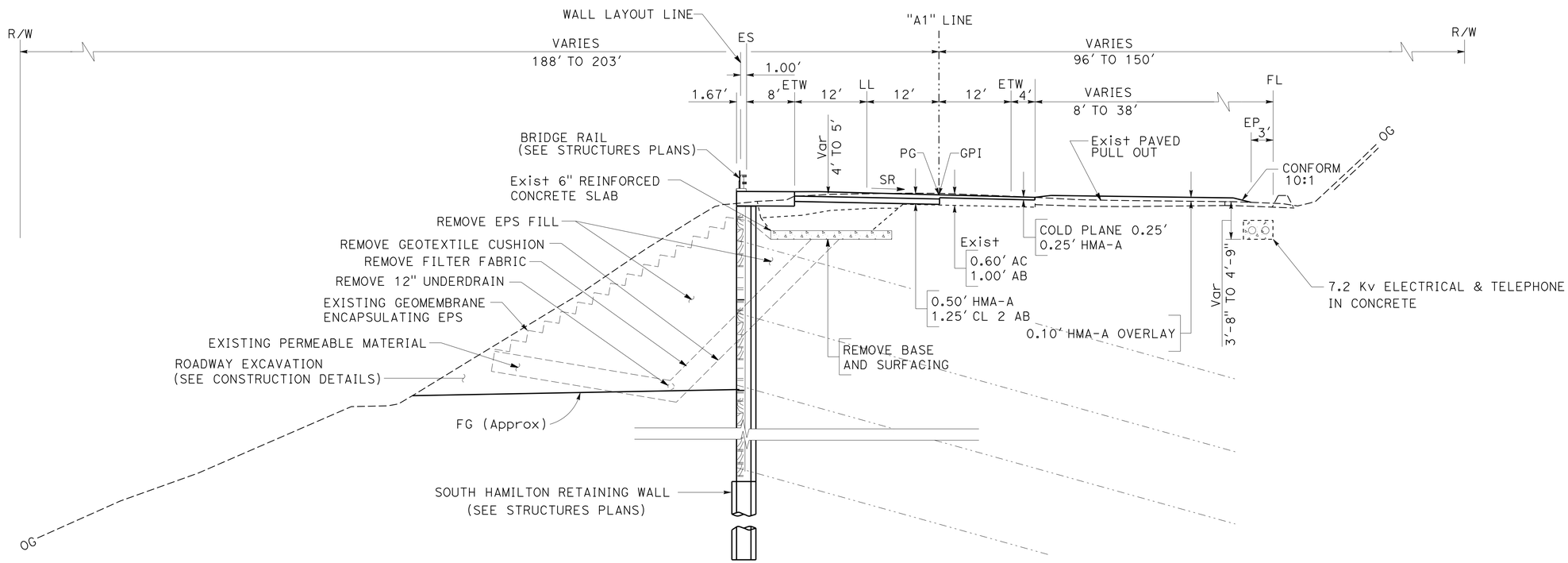

"A1" 496+63.76 TO "A1" 498+35.50

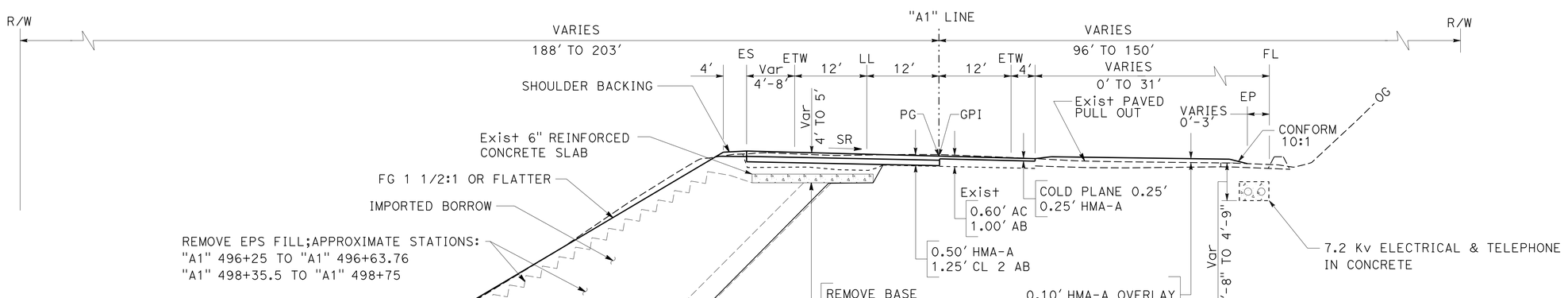

"A1" 496+00.00 TO "A1" 496+63.76
"A1" 498+35.50 TO "A1" 499+00.00

ROUTE 101

TYPICAL CROSS SECTIONS
NO SCALE

X-1

REVISED BY	DATE REVISED
TODD LARK	T. PHILLIPS
CALCULATED-DESIGNED BY	CHECKED BY
FUNCTIONAL SUPERVISOR	L.R. ASHLEY

STATE OF CALIFORNIA - DEPARTMENT OF TRANSPORTATION
Caltrans
DESIGN

P:\PROJ\01\0B300\drafting\01_0B300\01120001141ca001.dgn

LAST REVISION 04-21-15 | DATE PLOTTED => 06-JUL-2015 | TIME PLOTTED => 12:00

Dist	COUNTY	ROUTE	POST MILES TOTAL PROJECT	SHEET No.	TOTAL SHEETS
01	DN	101	21.9	3	55

REGISTERED CIVIL ENGINEER 4/30/15 DATE

May 1, 2015
PLANS APPROVAL DATE

REGISTERED PROFESSIONAL ENGINEER T. LARK No. 52481 Exp 12/31/16 CIVIL STATE OF CALIFORNIA

THE STATE OF CALIFORNIA OR ITS OFFICERS OR AGENTS SHALL NOT BE RESPONSIBLE FOR THE ACCURACY OR COMPLETENESS OF SCANNED COPIES OF THIS PLAN SHEET.

NOTES:

1. FOR ACCURATE RIGHT OF WAY DATA, CONTACT RIGHT OF WAY ENGINEERING AT THE DISTRICT OFFICE.
2. ELEVATION IS BASED ON NAVD88 DATUM. COORDINATE VALUES SHOWN ARE THE 1983 CALIFORNIA COORDINATE SYSTEM, ZONE 1.

ABBREVIATIONS:

TW TRAVELED WAY
VPI VERTICAL POINT OF INTERSECTION

LEGEND:

= COLD PLANE AC PAVEMENT (CONFORM)
= REMOVE BASE AND SURFACING
= 0.10' HMA-A (OVERLAY)
= HIGH FRICTION SURFACE TREATMENT (HFST)
= TRAFFIC STRIPE DETAIL No.

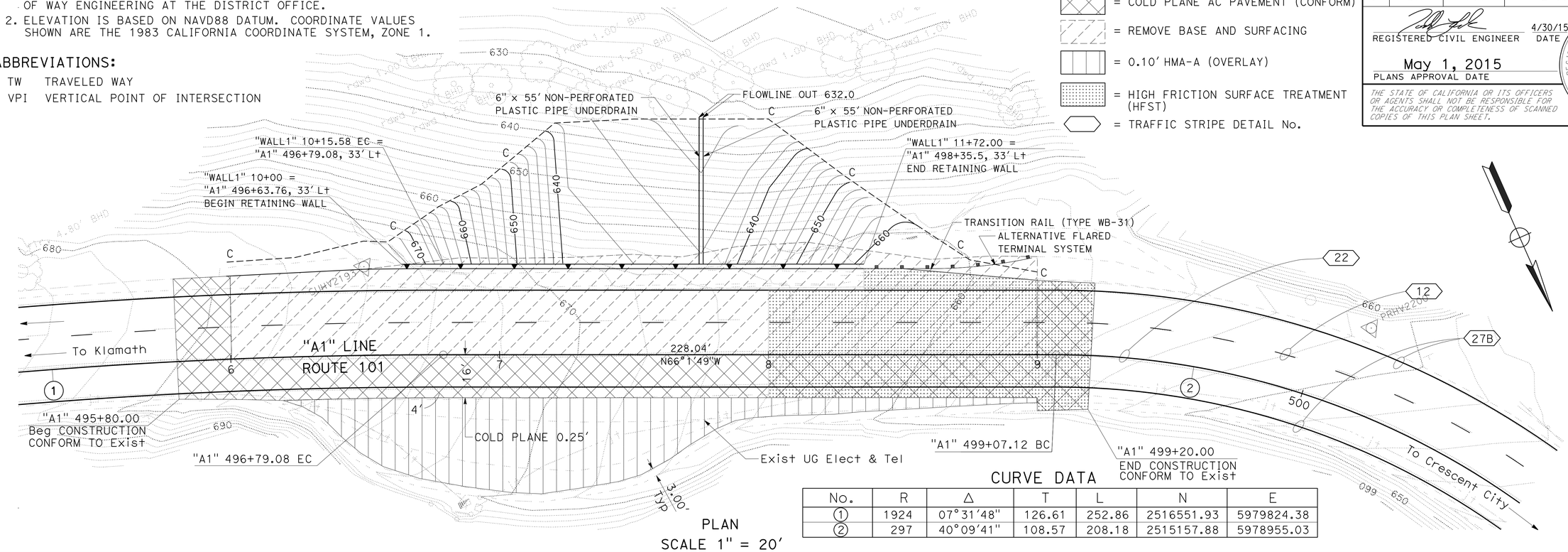

PLAN
SCALE 1" = 20'

CURVE DATA

No.	R	Δ	T	L	N	E
1	1924	07°31'48"	126.61	252.86	2516551.93	5979824.38
2	297	40°09'41"	108.57	208.18	2515157.88	5978955.03

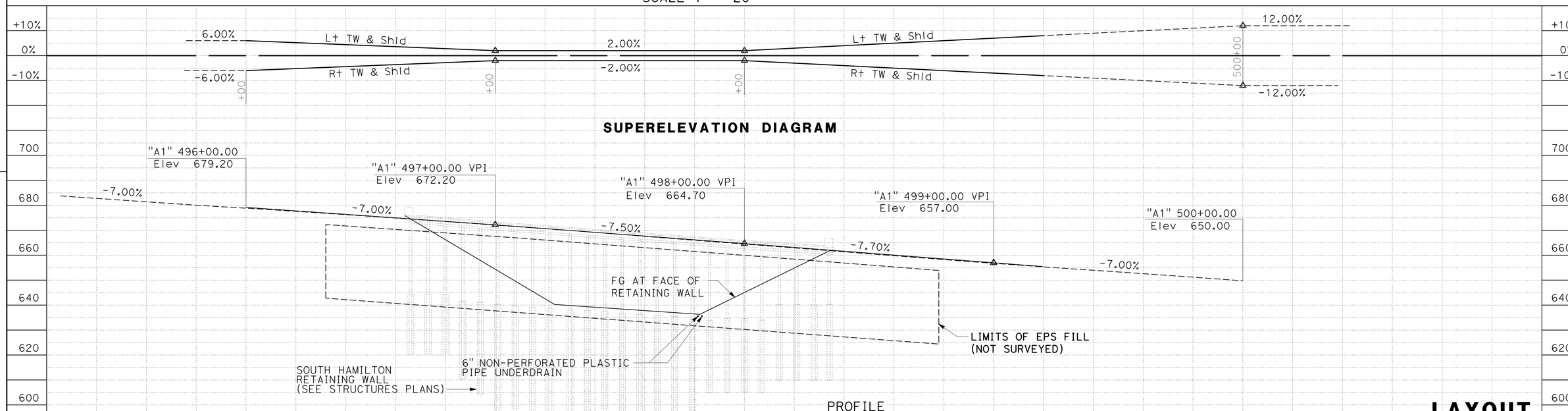

PROFILE
SCALE: 1" = 20' Horiz
1" = 20' Vert

LAYOUT L-1

FUNCTIONAL SUPERVISOR: L.R. ASHLEY
CALCULATED-DESIGNED BY: TODD LARK
CHECKED BY: T. PHILLIPS
REVISED BY / DATE REVISED

STATE OF CALIFORNIA - DEPARTMENT OF TRANSPORTATION
DESIGN

P:\PROJ\01\0B300\drafting\01_08300\01120001141ea001.dgn

LAST REVISION 04-21-15
DATE PLOTTED => 06-JUL-2015
TIME PLOTTED => 12:00

Dist	COUNTY	ROUTE	POST MILES TOTAL PROJECT	SHEET No.	TOTAL SHEETS
01	DN	101	21.9	4	55

REGISTERED CIVIL ENGINEER 4/30/15 DATE

May 1, 2015
PLANS APPROVAL DATE

REGISTERED PROFESSIONAL ENGINEER T. LARK No. 52481 Exp. 12/31/16 CIVIL STATE OF CALIFORNIA

THE STATE OF CALIFORNIA OR ITS OFFICERS OR AGENTS SHALL NOT BE RESPONSIBLE FOR THE ACCURACY OR COMPLETENESS OF SCANNED COPIES OF THIS PLAN SHEET.

LEGEND:

- ROADWAY EXCAVATION
- REMOVE BASE AND SURFACING
- REMOVE EXPANDED POLYSTYRENE (EPS)
- IMPORTED BORROW/EMBANKMENT

ABBREVIATIONS:

GPI GEOSYNTHETIC PAVEMENT INTERLAYER
EPS EXPANDED POLYSTYRENE

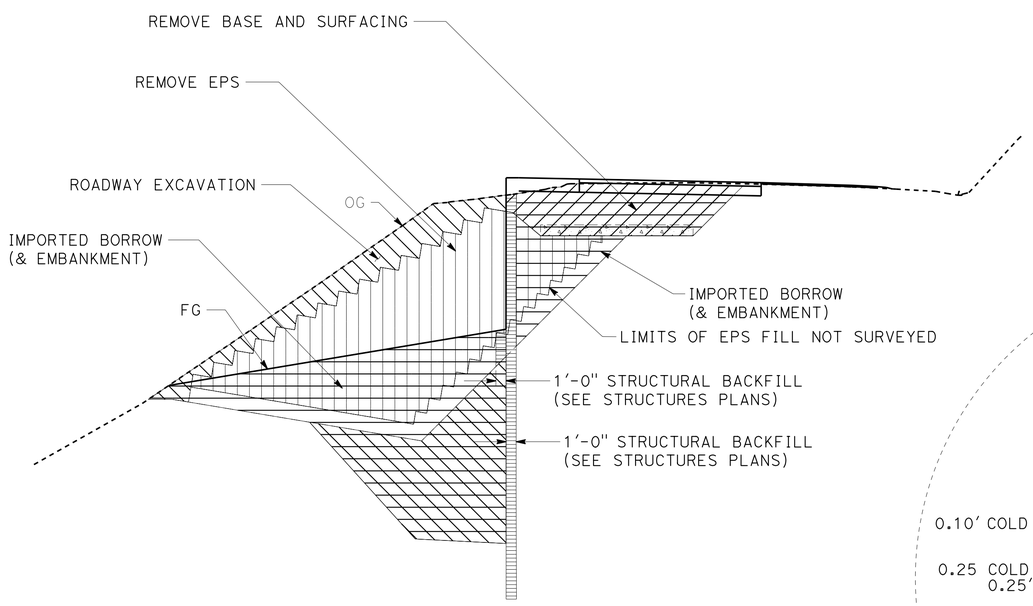

EARTHWORK PAYMENT DEFINITIONS

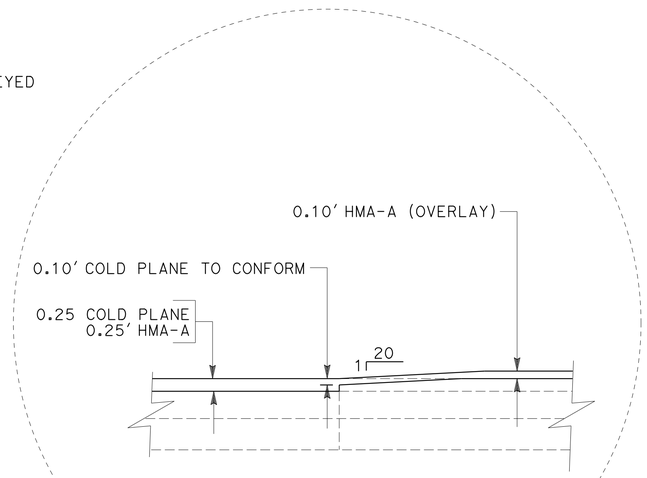

CONFORM AT PAVED PULLOUT

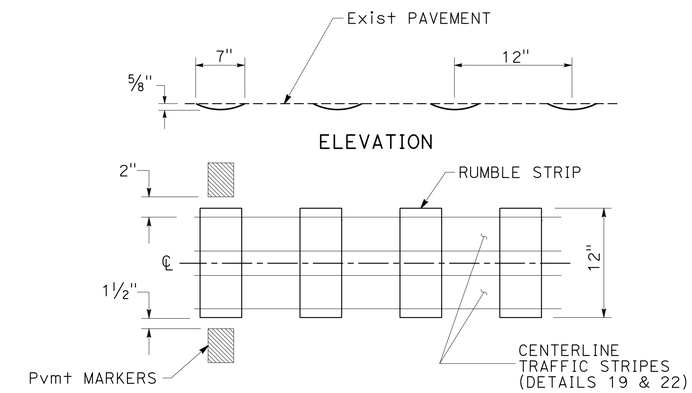

CENTERLINE RUMBLE STRIP

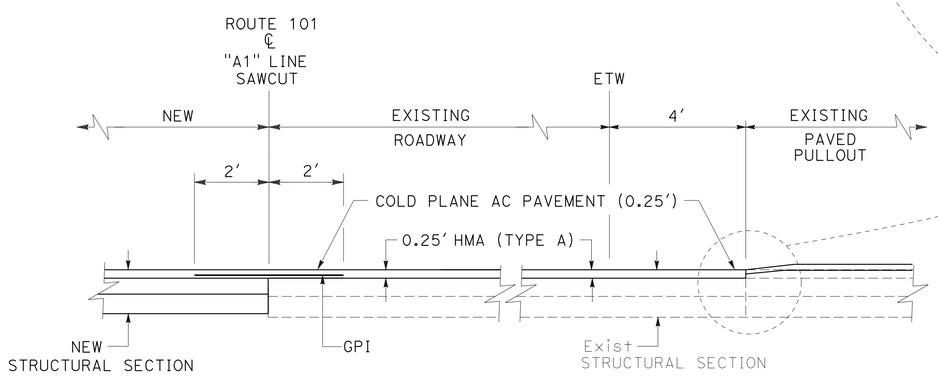

PAVING DETAIL

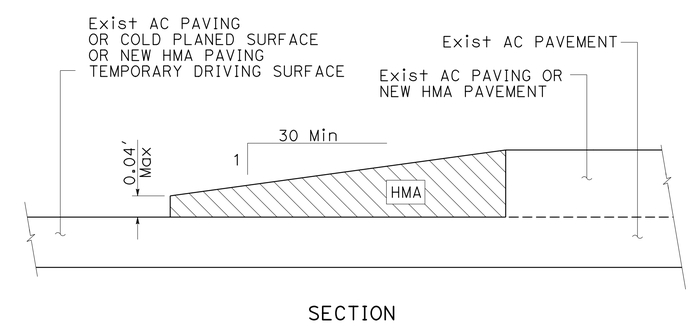

TEMPORARY TRANSVERSE PAVEMENT TAPER

CONSTRUCTION DETAILS
C-1

NO SCALE

REVISED BY	DATE REVISED

CALCULATED-DESIGNED BY	CHECKED BY
TODD LARK	T. PHILLIPS

FUNCTIONAL SUPERVISOR: L.R. ASHLEY

STATE OF CALIFORNIA - DEPARTMENT OF TRANSPORTATION
Caltrans
DESIGN

P:\PROJ\01\0B300\drafting\01_0B300\01120001141ga001.dgn

LAST REVISION 04-21-15 | DATE PLOTTED => 06-JUL-2015 | TIME PLOTTED => 12:00

Dist	COUNTY	ROUTE	POST MILES TOTAL PROJECT	SHEET No.	TOTAL SHEETS
01	DN	101	21.9	5	55

REGISTERED CIVIL ENGINEER 4/30/15 DATE

May 1, 2015
PLANS APPROVAL DATE

REGISTERED PROFESSIONAL ENGINEER T. LARK No. 52481 Exp. 12/31/16 CIVIL STATE OF CALIFORNIA

THE STATE OF CALIFORNIA OR ITS OFFICERS OR AGENTS SHALL NOT BE RESPONSIBLE FOR THE ACCURACY OR COMPLETENESS OF SCANNED COPIES OF THIS PLAN SHEET.

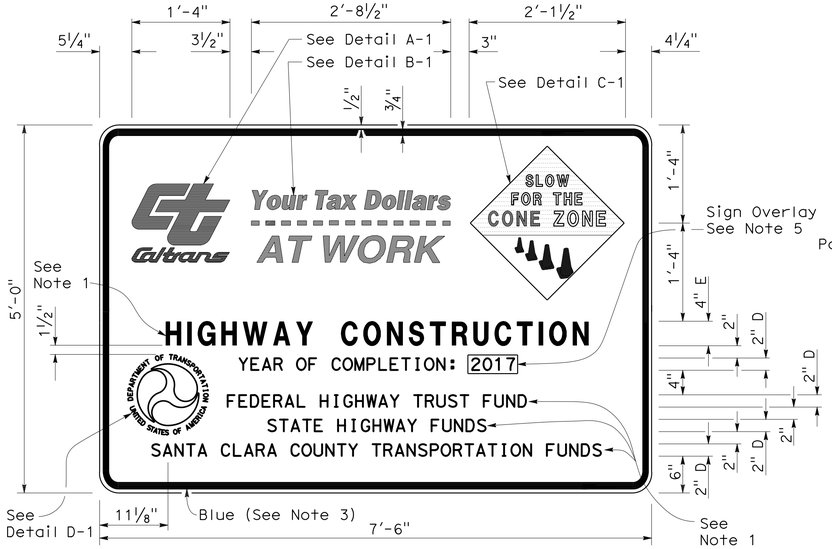

TYPE 1

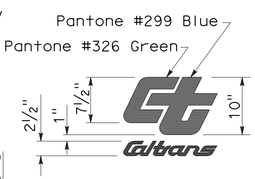

DETAIL A-1

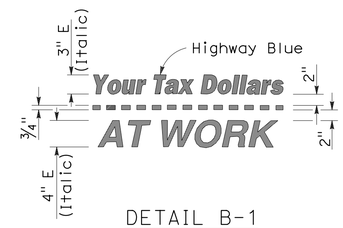

DETAIL B-1
(See Note 3)

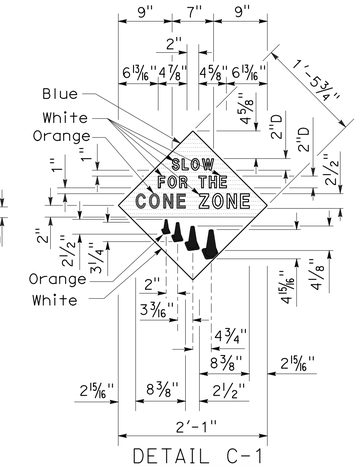

DETAIL C-1
(See Note 4)

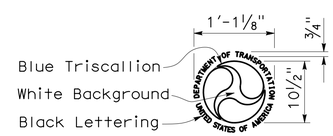

DETAIL D-1
(See Note 6)

NOTES:

1. The sign messages shown for type of project and fund types are examples only. See the Special Provisions for the applicable type of project and fund type messages to be used.
2. Except as otherwise shown, the legend of sign shall be black on a white background (non-reflective).
3. The border of the signs and details "B-1" and "B-2" shall be blue (non-reflective).
4. The diamond in details "C-1" and "C-2" shall be blue for the background of message, " SLOW FOR THE CONE ZONE", and white background for the orange cones. The color and type of font for the "SLOW FOR THE CONE ZONE" message shall be: "SLOW" white D; "FOR THE" white D; "CONE" orange Arial font; "ZONE" white Arial font.
5. Year of completion of project construction shown on the overlay is an example only. See the Special Provisions.
6. Use when the Project involves Federal Highway Trust Fund.

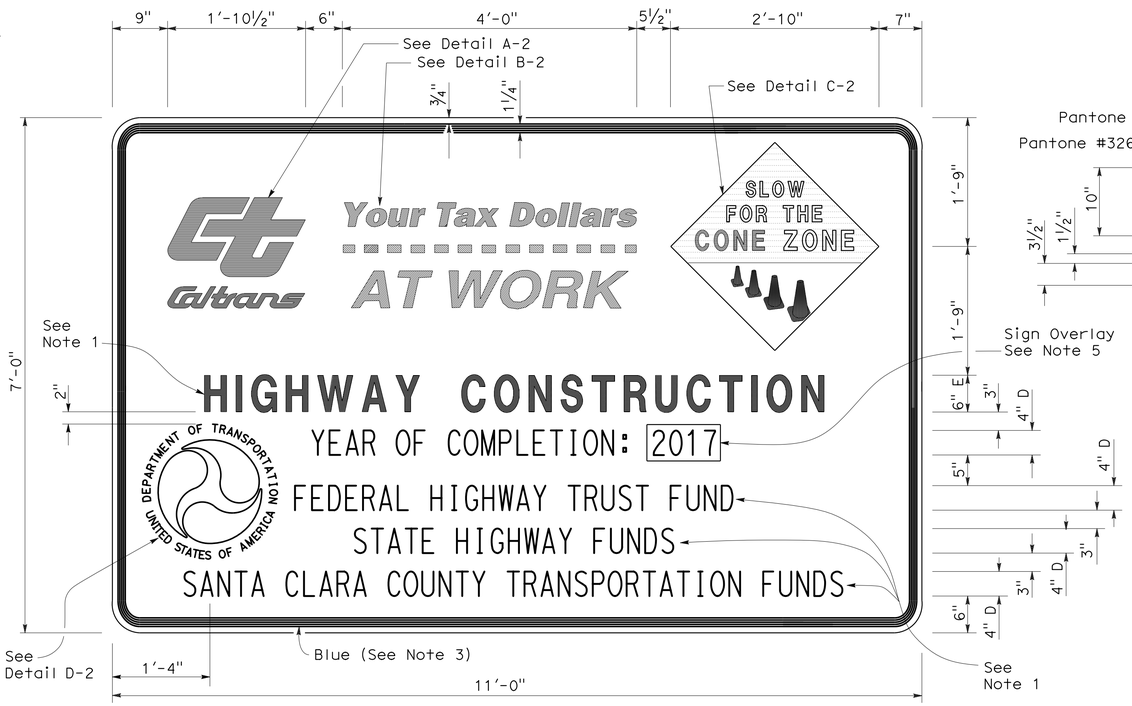

TYPE 2

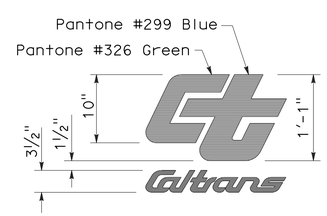

DETAIL A-2

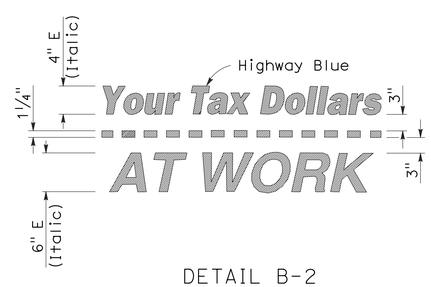

DETAIL B-2
(See Note 3)

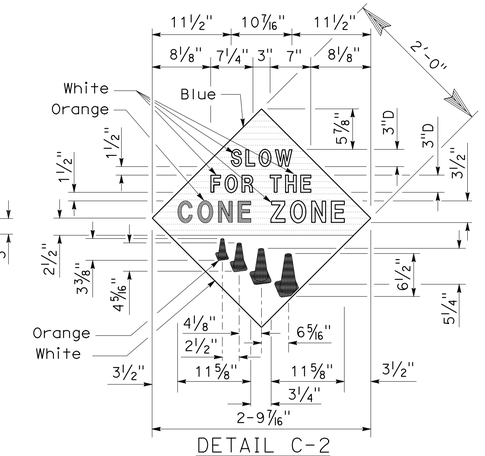

DETAIL C-2
(See Note 4)

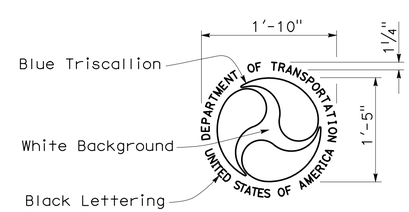

DETAIL D-2
(See Note 6)

NO SCALE

CONSTRUCTION PROJECT FUNDING IDENTIFICATION SIGNS

CONSTRUCTION DETAILS C-2

STATE OF CALIFORNIA - DEPARTMENT OF TRANSPORTATION
DESIGN
FUNCTIONAL SUPERVISOR L.R. ASHLEY
CALCULATED-DESIGNED BY T. PHILLIPS
CHECKED BY
REVISED BY
DATE REVISED
TODD LARK

P:\PROJ\01\0B300\drafting\01_0B300\01120001141ga002.dgn

LAST REVISION 04-21-15
DATE PLOTTED => 06-JUL-2015
TIME PLOTTED => 12:00

Dist	COUNTY	ROUTE	POST MILES TOTAL PROJECT	SHEET No.	TOTAL SHEETS
01	DN	101	21.9	6	55

REGISTERED CIVIL ENGINEER 4/30/15 DATE

May 1, 2015
PLANS APPROVAL DATE

REGISTERED PROFESSIONAL ENGINEER T. LARK No. 52481 Exp. 12/31/16 CIVIL STATE OF CALIFORNIA

THE STATE OF CALIFORNIA OR ITS OFFICERS OR AGENTS SHALL NOT BE RESPONSIBLE FOR THE ACCURACY OR COMPLETENESS OF SCANNED COPIES OF THIS PLAN SHEET.

NOTE:
EXACT SIGN LOCATIONS TO BE DETERMINED BY THE ENGINEER.

LEGEND:
Temp FLASHING BEACON
(SEE ELECTRICAL PLANS)

STATIONARY MOUNTED CONSTRUCTION AREA SIGNS

SIGN	SIGN CODE	SIGN MESSAGE	PANEL SIZE	NUMBER AND SIZE OF POSTS	NUMBER OF SIGNS EA	REMARKS
A	C40 (CA)	TRAFFIC FINES DOUBLED IN CONSTRUCTION ZONES	108" x 42"	2 - 6" x 6"	2	
B	W20-1	ROAD WORK AHEAD	36" x 36"	WOOD POLE	2	SEE ELECTRICAL PLANS
C	W11-1	BICYCLE SYMBOL	36" x 36"	1 - 4" x 6"	2	
	W16-1	SHARE THE ROAD	24" x 30"		2	
D	W20-4	ONE LANE ROAD AHEAD	36" x 36"	WOOD POLE	2	SEE ELECTRICAL PLANS
E	W3-3	SIGNAL AHEAD SYMBOL	36" x 36"	WOOD POLE	2	SEE ELECTRICAL PLANS
	W16-2A	750 FT	24" x 12"			
F	R10-6	STOP HERE ON RED	24" x 36"	1 - 4" x 6"	2	
G	W1-4	Horiz ALIGNMENT ARROW	36" x 36"	1 - 4" x 6"	1	
H	G20-2	END ROAD WORK	36" x 18"	1 - 4" x 4"	2	
I	C20 (CA)	RIGHT LANE CLOSED AHEAD	36" x 36"	1 - 4" x 6"	1	
J	W4-2R	RIGHT LANE ENDS SYMBOL	36" x 36"	1 - 4" x 6"	1	
				TOTAL	19	

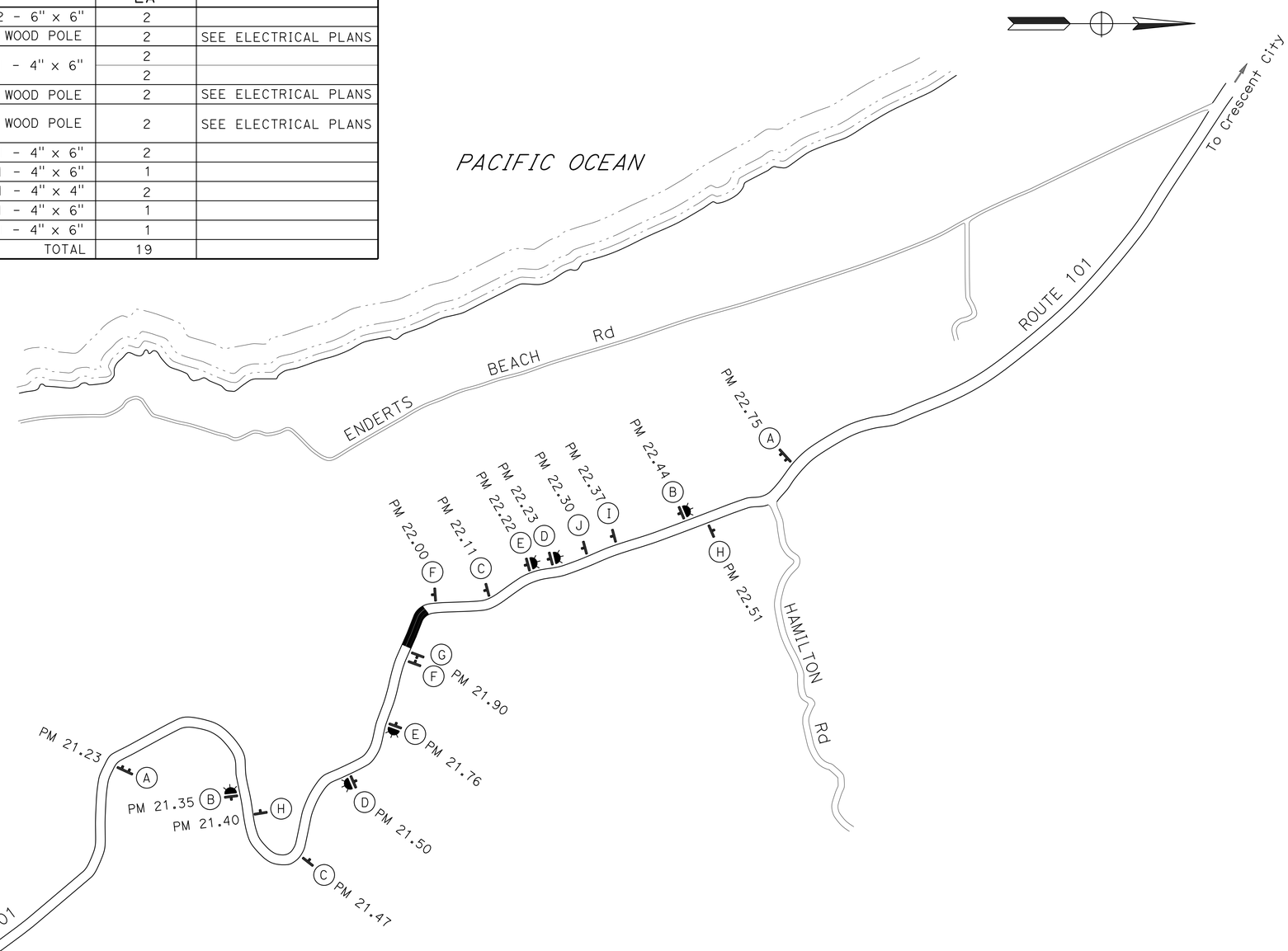

APPROVED FOR CONSTRUCTION AREA SIGN WORK ONLY

CONSTRUCTION AREA SIGNS
NO SCALE

CS-1

REVISED BY | DATE REVISED
TODD LARK | T. PHILLIPS
CALCULATED-DESIGNED BY | CHECKED BY
FUNCTIONAL SUPERVISOR
L.R. ASHLEY

STATE OF CALIFORNIA - DEPARTMENT OF TRANSPORTATION
Caltrans
DESIGN

P:\PROJ\01\0B300\drafting\01_0B300\01120001141\a001.dgn

LAST REVISION 04-21-15 | DATE PLOTTED => 06-JUL-2015 | TIME PLOTTED => 12:00

Dist	COUNTY	ROUTE	POST MILES TOTAL PROJECT	SHEET No.	TOTAL SHEETS
01	DN	101	21.9	7	55

REGISTERED CIVIL ENGINEER 4/30/15 DATE

May 1, 2015
PLANS APPROVAL DATE

REGISTERED PROFESSIONAL ENGINEER T. LARK No. 52481 Exp. 12/31/16 CIVIL STATE OF CALIFORNIA

THE STATE OF CALIFORNIA OR ITS OFFICERS OR AGENTS SHALL NOT BE RESPONSIBLE FOR THE ACCURACY OR COMPLETENESS OF SCANNED COPIES OF THIS PLAN SHEET.

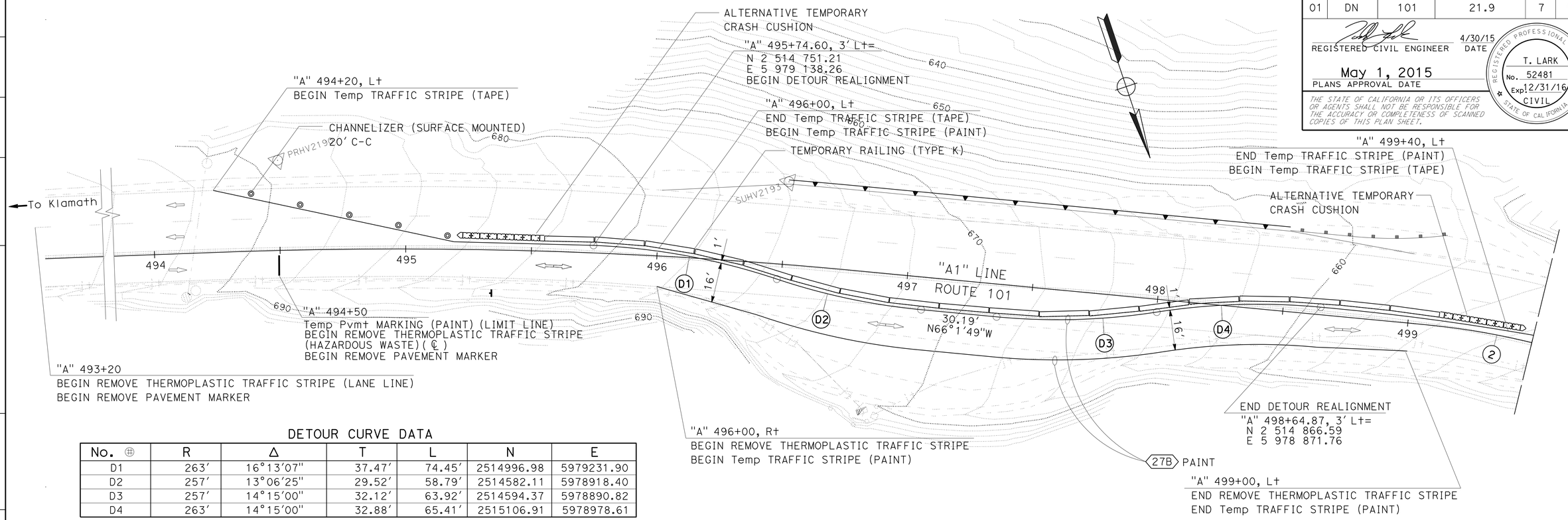

DETOUR CURVE DATA

No. ⊕	R	Δ	T	L	N	E
D1	263'	16°13'07"	37.47'	74.45'	2514996.98	5979231.90
D2	257'	13°06'25"	29.52'	58.79'	2514582.11	5978918.40
D3	257'	14°15'00"	32.12'	63.92'	2514594.37	5978890.82
D4	263'	14°15'00"	32.88'	65.41'	2515106.91	5978978.61

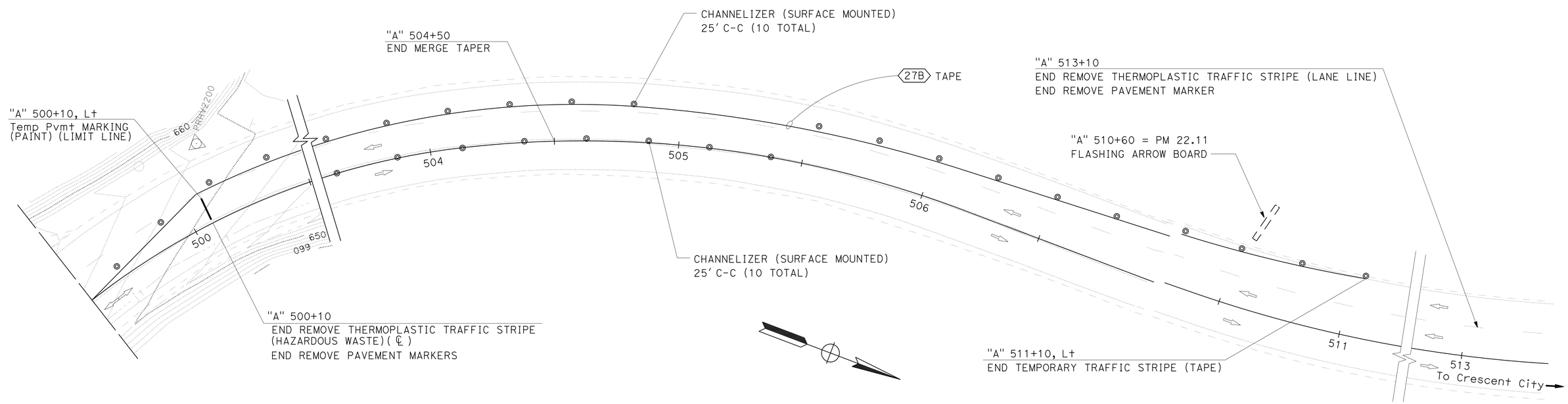

STAGE CONSTRUCTION

SCALE: 1"=20'

APPROVED FOR STAGE CONSTRUCTION AND TRAFFIC HANDLING WORK ONLY

SC-1

REVISED BY	DATE REVISED

CALCULATED-DESIGNED BY: TODD LARK
CHECKED BY: T. PHILLIPS
FUNCTIONAL SUPERVISOR: L.R. ASHLEY

STATE OF CALIFORNIA - DEPARTMENT OF TRANSPORTATION
DESIGN
Caltrans

P:\PROJ\01\0B300\drafting\01_0B300\01120001141ma001.dgn

LAST REVISION 04-21-15 | DATE PLOTTED => 06-JUL-2015 | TIME PLOTTED => 12:00

Dist	COUNTY	ROUTE	POST MILES TOTAL PROJECT	SHEET No.	TOTAL SHEETS
01	DN	101	21.9	8	55

REGISTERED CIVIL ENGINEER — DATE 3-5-15

May 1, 2015
PLANS APPROVAL DATE

REGISTERED PROFESSIONAL ENGINEER — SHERI M. RODRIGUEZ No. C66861 Exp. 9-30-16 CIVIL — STATE OF CALIFORNIA

THE STATE OF CALIFORNIA OR ITS OFFICERS OR AGENTS SHALL NOT BE RESPONSIBLE FOR THE ACCURACY OR COMPLETENESS OF SCANNED COPIES OF THIS PLAN SHEET.

NOTES:

1. CALIFORNIA CODES ARE DESIGNATED BY (CA). OTHERWISE, FEDERAL (MUTCD) CODES ARE SHOWN.
2. ALL SIGNS SHALL HAVE A BLACK LEGEND ON FLUORESCENT ORANGE BACKGROUND AND SHALL BE EQUIPPED WITH AT LEAST TWO 16" x 16" ORANGE FLAGS FOR DAYTIME CLOSURE OR FLASHING BEACONS FOR LANE CLOSURE DURING HOURS OF DARKNESS.
3. ALL CONES USED FOR LANE CLOSURES DURING THE HOURS OF DARKNESS SHALL BE FITTED WITH RETROREFLECTIVE BANDS OR SLEEVES.
4. WHEN A PILOT CAR IS USED, PLACE A C37 (CA) SIGN AT ALL INTERSECTIONS WITHIN TRAFFIC CONTROL AREA. WHERE VEHICULAR TRAFFIC CAN NOT EFFECTIVELY SELF-REGULATE, AT LEAST ONE FLAGGER SHALL BE USED AT EACH INTERSECTION WITHIN THE TRAFFIC CONTROL AREA.
5. FLAGGER SHOULD STAND IN A CONSPICUOUS PLACE, FACING TRAFFIC AT ALL TIMES, BE VISIBLE TO APPROACHING TRAFFIC AS WELL AS APPROACHING VEHICLES AFTER THE FIRST VEHICLE HAS STOPPED.
6. ADDITIONAL ADVANCE FLAGGERS ARE REQUIRED.
7. WHEN FLAGGER IS NOT VISIBLE FROM THIS LOCATION PLACE A C29 (CA) SIGN BELOW THE C9A (CA) SIGN.

LEGEND

- TRAFFIC CONE
- TEMPORARY SIGN
- DIRECTION OF TRAVEL
- PORTABLE FLASHING BEACON
- FLAGGER

SIGN PANEL SIZE (MINIMUM)

A	48" x 48" - SPEED OF 45 mph OR MORE 36" x 36" - SPEED LESS THAN 45 mph
B	30" x 30"
C	UNUSED
D	UNUSED
E	20" x 7"

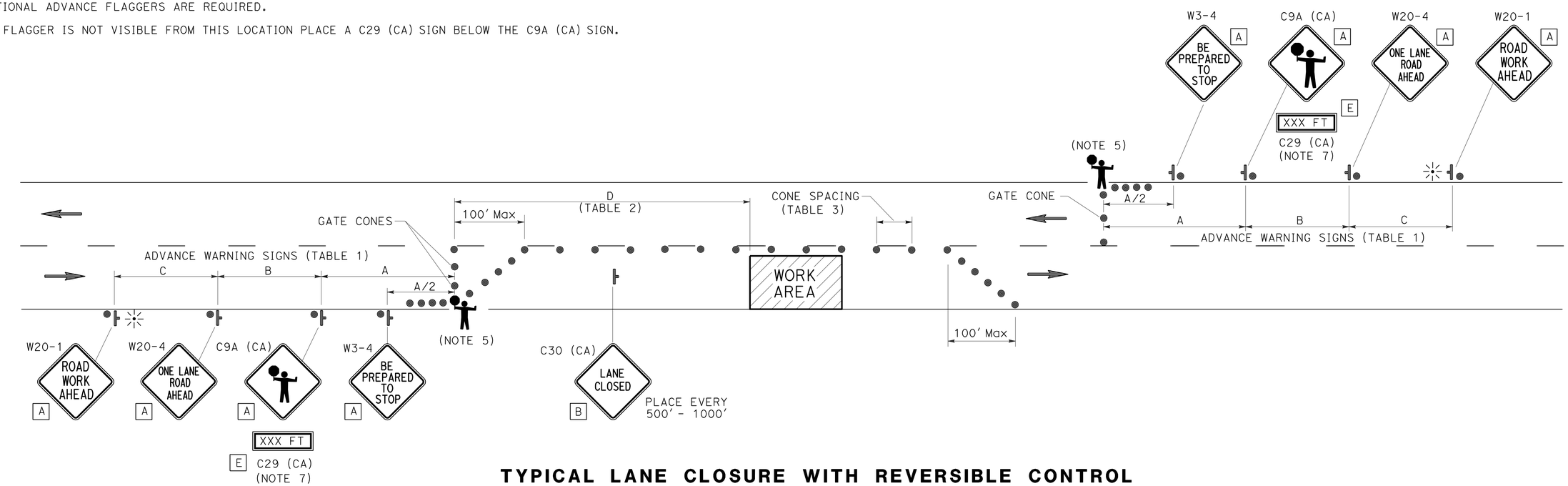

TYPICAL LANE CLOSURE WITH REVERSIBLE CONTROL

TABLE 1

ADVANCE WARNING SIGN SPACING

ROAD TYPE	Min A	Min B	Min C
	ft		
URBAN (25 mph OR LESS)	100	100	100
URBAN (30 mph TO 40 mph)	250	250	250
URBAN (MORE THAN 40 mph)	350	350	350
RURAL	500	500	500
EXPRESSWAY / FREEWAY	1000	1500	2640

TABLE 2

BUFFER SPACE

APPROACH SPEED	Min D	DOWNGRADE Min D		
		-3%*	-6%*	-9%*
mph	ft			
25 & BELOW	155	158	165	173
30	200	205	215	227
35	250	257	271	287
40	305	315	333	354
45	360	378	400	427
50	425	446	474	507
55	495	520	553	593
60	570	598	638	686
65	645	682	728	785

* USE ON SUSTAINED DOWNGRADE STEEPER THAN -3 PERCENT AND LONGER THAN 1 MILE.

TABLE 3

Max CONE SPACING

POSTED SPEED	TAPER	TANGENT	CONFLICT*
mph	ft		
20	20	40	10
25	25	50	12
30	30	60	15
35	35	70	17
40	40	80	20
45	45	90	22
50	50	100	25
55	55	110	27
60	60	120	30
65	65	130	32

* USE WHERE THERE IS A CONFLICT BETWEEN EXISTING PAVEMENT MARKINGS AND CHANNELIZERS.

APPROVED FOR TRAFFIC HANDLING WORK ONLY

NO SCALE

TRAFFIC HANDLING PLAN
TH-1

REVISED BY | DATE REVISED
SHERI M. RODRIGUEZ | TROY A. ARSENEAU
CALCULATED-DESIGNED BY | CHECKED BY
FUNCTIONAL SUPERVISOR: RICHARD MULLEN

STATE OF CALIFORNIA - DEPARTMENT OF TRANSPORTATION
Caltrans® TRAFFIC OPS

P:\PROJ\01\0B300\drafting\01_0B300\01120001141md001.dgn

LAST REVISION 04-21-15 | DATE PLOTTED => 06-JUL-2015 | TIME PLOTTED => 12:00

NOTE: (N) - NOT A SEPARATE PAY ITEM, FOR INFORMATION ONLY

Dist	COUNTY	ROUTE	POST MILES TOTAL PROJECT	SHEET No.	TOTAL SHEETS
01	DN	101	21.9	9	55

REGISTERED CIVIL ENGINEER 4/30/15 DATE

May 1, 2015
PLANS APPROVAL DATE

REGISTERED PROFESSIONAL ENGINEER T. LARK No. 52481 Exp. 12/31/16 CIVIL STATE OF CALIFORNIA

THE STATE OF CALIFORNIA OR ITS OFFICERS OR AGENTS SHALL NOT BE RESPONSIBLE FOR THE ACCURACY OR COMPLETENESS OF SCANNED COPIES OF THIS PLAN SHEET.

REMOVE EPS FILL

LOCATION		REMOVE EPS FILL	REMOVE PERMEABLE MATERIAL (N)	REMOVE GEOMEMBRANE (N)	REMOVE GEOTEXTILE CUSHION (N)	REMOVE FILTER FABRIC (N)	REMOVE 12-INCH UD (N)
FROM	TO	CY	CY	SQYD	SQYD	SQYD	LF
"A" 496+25	"A" 498+75	4200	2000	1700	1700	4700	300
	TOTAL	4200					

DRAINAGE QUANTITIES

LOCATION	6" NON-PERFORATED PLASTIC PIPE UNDERDRAIN	REMARKS
	LF	
"A1" 497+80, L+	110	SEE LAYOUT, SHEET L-1
TOTAL	110	

TEMPORARY RAILING

LOCATION		TEMPORARY RAILING (TYPE K)	ALTERNATIVE TEMPORARY CRASH CUSHION	CHANNELIZER (SURFACE MOUNTED)	REMARKS
FROM	TO	LF	EA	EA	
"A" 494+20	"A" 495+20			6	20' C-C
"A" 495+20	"A" 499+45	360	2		
"A" 499+50	"A" 511+10			46	25' C-C
"A" 501+10	"A" 503+35			10	25' C-C ℄
	TOTAL	360	2	62	

TEMPORARY EROSION CONTROL

LOCATION		TEMPORARY SILT FENCE	TEMPORARY FIBER ROLL	TEMPORARY CHECK DAM	TEMPORARY DRAINAGE INLET PROTECTION	TEMPORARY MULCH	TEMPORARY COVER
		LF	LF	LF	EA	SQYD	SQYD
"A" 496+50	"A" 499+00	250	500			1200	1200
"A" 496+50	"A" 501+30			100			
"A" 501+50	"A" 501+50				1		
	TOTAL	250	500	100	1	1200	1200

COLD PLANE AC PAVEMENT

LOCATION		COLD PLANE AC PAVEMENT	GEOSYNTHETIC PAVEMENT INTERLAYER (PAVING FABRIC)	ASPHALT BINDER (GEOSYNTHETIC PAVEMENT INTERLAYER)
FROM	TO	SQYD	SQYD	TON
"A" 495+80	"A" 499+20	500	140	0.14
	TOTAL	500	140	0.14

CENTERLINE RUMBLE STRIP

LOCATION		DETAIL NUMBER	CENTERLINE RUMBLE STRIP
FROM	TO		STA
"A" 495+80	"A" 499+20	22	3.2
		TOTAL	3.2

GUARD RAIL

LOCATION		L+/R+	TRANSITION RAILING (TYPE WB-31)	ALTERNATIVE FLARED TERMINAL SYSTEM	REMARKS
FROM	TO		EA	EA	
"A" 498+50	"A" 499+00	L+	1	1	STEEL POSTS
		TOTAL	1	1	

PAVEMENT DELINEATION

LOCATION		DETAIL No.	DETAIL LENGTH (N)	REMOVE THERMOPLASTIC TRAFFIC STRIPE	REMOVE YELLOW THERMOPLASTIC TRAFFIC STRIPE (HAZARDOUS WASTE)	REMOVE PAVEMENT MARKER	TEMPORARY TRAFFIC STRIPE		TEMPORARY PAVEMENT MARKING (PAINT)	REMOVE PAINTED PAVEMENT MARKING	4" THERMOPLASTIC TRAFFIC STRIPE			PAVEMENT MARKER (RETROREFLECTIVE-RECESSED)	
				WHITE			(PAINT)	(TAPE)			YELLOW	WHITE	WHITE (BROKEN 36-12)	(TYPE D)	(TYPE G)
FROM	TO			LF	LF	EA	LF	LF	SQFT	SQFT	LF	LF	LF	EA	EA
"A" 493+20	"A" 496+00	12	280	70		6									
"A" 494+50	"A" 500+10	22	560		1120	48									
"A" 496+00, R+	"A" 499+00, R+	27B	300	300											
"A" 499+20	"A" 513+10	12	1390	348		29									
"A" 494+20, L+	"A" 496+00, L+	27B	180					180							
"A" 494+50, R+		LANE LINE							12	12					
"A" 496+00, L+	"A" 499+20, L+	27B	320				320								
"A" 496+00, R+	"A" 499+00, R+	27B	300				300								
"A" 499+20, L+	"A" 511+10, L+	27B	1190					1190							
"A" 500+10, L+		LANE LINE							12	12					
"A" 493+20	"A" 513+10	12	1990										1990		42
"A" 494+50	"A" 500+10	22	560								1120			48	
"A" 496+00, R+	"A" 499+20, R+	27B	320									320			
"A" 496+00, L+	"A" 499+20, L+	27B	320									320			
			SUB TOTAL	718	1120	83	620	1370	24	24	1120	640	1990	48	42
			TOTAL	718	1120	83	620	1370	24	24	1760		1990	90	

ROADWAY

LOCATION		REMOVE BASE AND SURFACING	HIGH FRICTION SURFACE TREATMENT	ROADWAY EXCAVATION (CY)	IMPORTED BORROW (CY)	EMBANKMENT (N)	CLASS 2 AGGREGATE BASE (CY)	HMA (TYPE A)	TACKCOAT	SHOULDER BACKING	REMARKS
FROM	TO	CY	SQYD	CY	CY	CY	CY	TON	TON	TON	
"A" 495+80	"A" 499+20	1300	600	3600	3000	3500	430	490	1.15	8	HMA OVERLAY
	TOTAL	1300	600	3600	3000	3500	430	490	1.15	8	

SUMMARY OF QUANTITIES

Q-1

REVISED BY | DATE REVISED
TODD LARK | T. PHILLIPS
CALCULATED-DESIGNED BY | CHECKED BY
FUNCTIONAL SUPERVISOR: L.R. ASHLEY
STATE OF CALIFORNIA - DEPARTMENT OF TRANSPORTATION
Caltrans
DESIGN

P:\PROJ\01\0B300\draffing\01_0B300\01120001141pa001.dgn

LAST REVISION 04-21-15 | DATE PLOTTED => 06-JUL-2015 | TIME PLOTTED => 12:00

Dist	COUNTY	ROUTE	POST MILES TOTAL PROJECT	SHEET No.	TOTAL SHEETS
01	DN	101	21.9	10	55

Laura Lazzarotto
LICENSED LANDSCAPE ARCHITECT

May 1, 2015
PLANS APPROVAL DATE

LICENSED LANDSCAPE ARCHITECT
Laura Lazzarotto LA 4049
Expiration Date 8-31-05
Renewal Date 4-30-15
Date
STATE OF CALIFORNIA

THE STATE OF CALIFORNIA OR ITS OFFICERS OR AGENTS SHALL NOT BE RESPONSIBLE FOR THE ACCURACY OR COMPLETENESS OF SCANNED COPIES OF THIS PLAN SHEET.

NOTES:

1. FOR ACCURATE RIGHT OF WAY DATA, CONTACT RIGHT OF WAY ENGINEERING AT THE DISTRICT OFFICE.

LEGEND:

EC TYPE 1

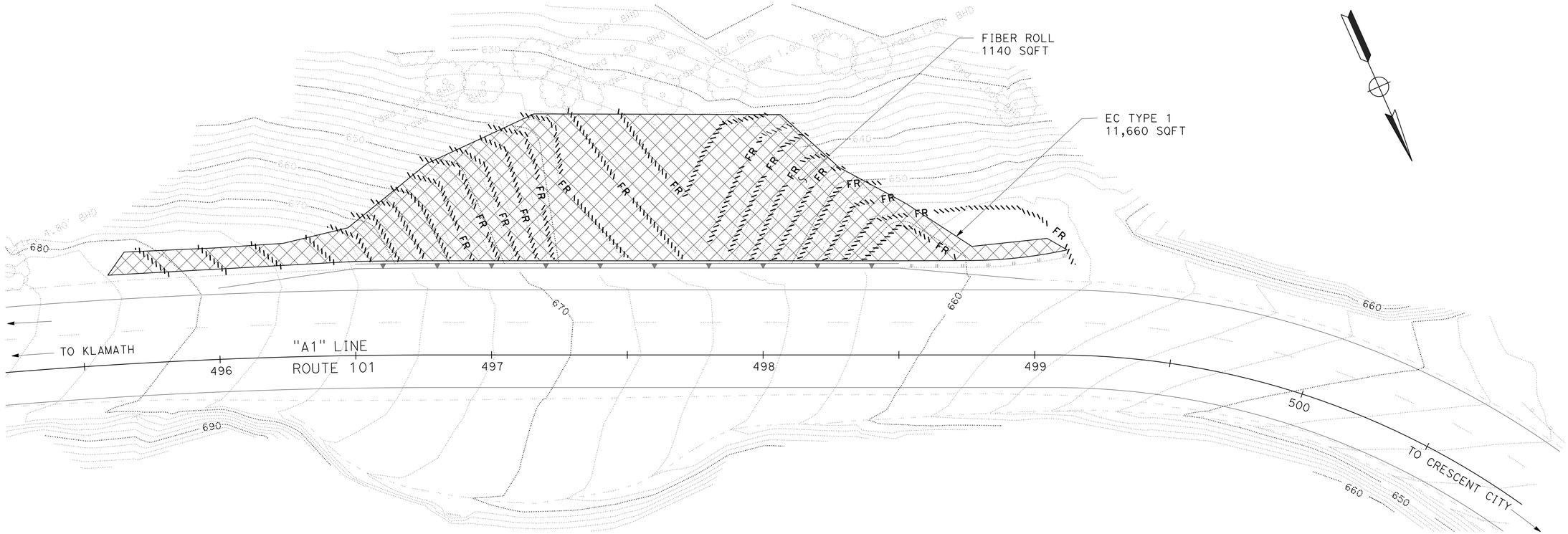

EROSION CONTROL PLAN
EC-1

APPROVED FOR EROSION CONTROL WORK ONLY

SCALE: 1" = 20'

REVISED BY | DATE REVISED

LAURA LAZZAROTTO | TODD LARK

CALCULATED-DESIGNED BY | CHECKED BY

SENIOR LANDSCAPE ARCHITECT | RON FLORY

STATE OF CALIFORNIA - DEPARTMENT OF TRANSPORTATION

Caltrans®

LANDSCAPE

P:\PROJ\01\0B300\drafting\01_0B300\01120001141te001.dgn

LAST REVISION 04-21-15 | DATE PLOTTED => 06-JUL-2015 | TIME PLOTTED => 12:00

Dist	COUNTY	ROUTE	POST MILES TOTAL PROJECT	SHEET No.	TOTAL SHEETS
01	DN	101	21.9	11	55

Laura Lazzarotto
LICENSED LANDSCAPE ARCHITECT

May 1, 2015
PLANS APPROVAL DATE

LICENSED LANDSCAPE ARCHITECT
Laura Lazzarotto LA 4045
Expiration Date 8-31-05
Renewal Date 4-30-15
Date
STATE OF CALIFORNIA

THE STATE OF CALIFORNIA OR ITS OFFICERS OR AGENTS SHALL NOT BE RESPONSIBLE FOR THE ACCURACY OR COMPLETENESS OF SCANNED COPIES OF THIS PLAN SHEET.

EROSION CONTROL QUANTITIES

PLAN SHEET	LOCATION		LT	EROSION CONTROL TYPE	FIBER ROLLS	HYDROSEED	STRAW	HYDROMULCH	COMPOST	AREA	PURE LIVE SEED	FIBER	TACKIFIER	COMPOST	STRAW
	FROM	TO			LF	SQFT	SQFT	SQFT	SQFT	SQFT (N)	LBS (N)			CY (N)	TON (N)
EC-1	"A" 495+00	"A" 499+50	X	TYPE 1	1140	11,660	11,660	11,660	11,660	11,660	34.8	642.4	37.5	72.3	0.80
				TOTAL	1140	11,660	11,660	11,660	11,660	11,660	34.8	642.4	37.5	72.3	0.80

NOTE: (N) DENOTES NON PAY ITEM. (FOR INFORMATION ONLY)

FIBER ROLLS

SEQUENCE	ITEM	MATERIAL		REMARKS
		DESCRIPTION	TYPE	
FIBER ROLLS MUST BE INSTALLED BEFORE EROSION CONTROL	FIBER ROLLS	FIBER ROLL	TYPE B 8" TO 10" Dia	TYPE 1 FIBER ROLL INSTALLATION

EROSION CONTROL TYPE 1

SEQUENCE	ITEM	MATERIAL		APPLICATION RATE	REMARKS
		DESCRIPTION	TYPE		
STEP 1	HYDROSEED	SEED	MIX 1	130 LB/ACRE	
		FIBER	WOOD	1200 LB/ACRE	
		COMPOST	MEDIUM	270 CY/ACRE	
STEP 2	STRAW	STRAW	WHEAT &/OR BARLEY	3 TON/ACRE	
STEP 3	HYDROMULCH	FIBER	WOOD	1200 LB/ACRE	
		TACKIFIER	PSYLLIUM	140 LB/ACRE	

SEED MIX 1

SEED	BOTANICAL NAME (COMMON NAME)	PERCENT GERMINATION (MINIMUM)	POUNDS PURE LIVE SEED PER ACRE (SLOPE MEASUREMENT)
MIX 1	BROMUS CARINATUS var. MARITIMUS[1] (COASTAL CALIFORNIA BROME)	50	40
	HORDEUM VULGARE var. UC (COMMON BARLEY)	75	90

[1] SEED PRODUCED IN CALIFORNIA ONLY.

EROSION CONTROL TABLES AND EROSION CONTROL QUANTITIES
ECQ-1

REVISED BY | DATE REVISED
LAURA LAZZAROTTO | TODD LARK
CALCULATED-DESIGNED BY | CHECKED BY
SENIOR LANDSCAPE ARCHITECT | RON FLORY
STATE OF CALIFORNIA - DEPARTMENT OF TRANSPORTATION
Caltrans
LANDSCAPE

P:\PROJ\01\0B300\drafting\01_0B300\01120001141tg001.dgn

LAST REVISION 04-21-15 | DATE PLOTTED => 06-JUL-2015 | TIME PLOTTED => 12:00

Dist	COUNTY	ROUTE	POST MILES TOTAL PROJECT	SHEET No.	TOTAL SHEETS
01	DN	101	21.9	12	55

Brian T. Finck 4/30/15
REGISTERED ELECTRICAL ENGINEER DATE

May 1, 2015
PLANS APPROVAL DATE

REGISTERED PROFESSIONAL ENGINEER
BRIAN T. FINCK
No. 17756
Exp. 6-30-16
ELECTRICAL
STATE OF CALIFORNIA

THE STATE OF CALIFORNIA OR ITS OFFICERS OR AGENTS SHALL NOT BE RESPONSIBLE FOR THE ACCURACY OR COMPLETENESS OF SCANNED COPIES OF THIS PLAN SHEET.

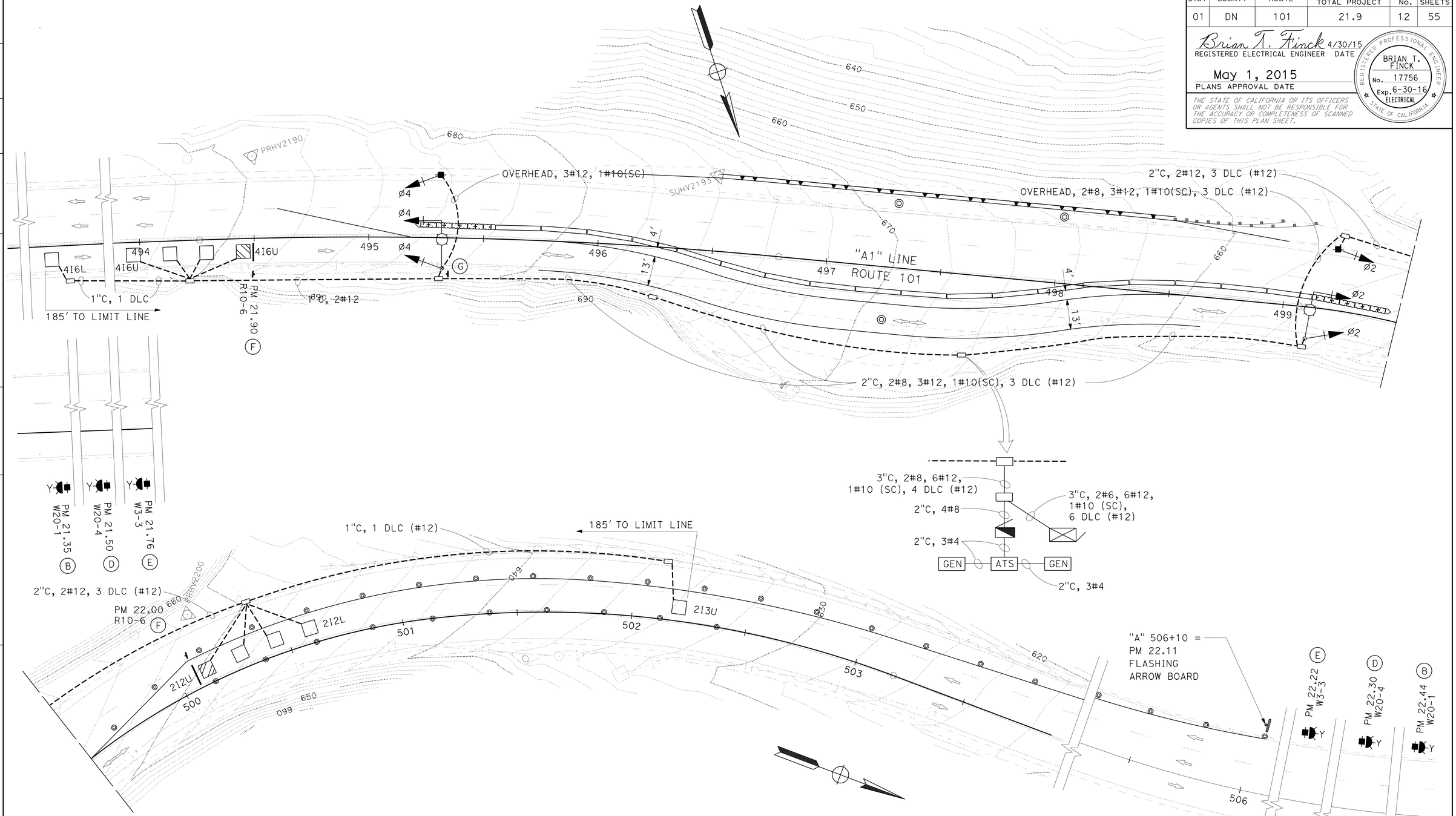

APPROVED FOR ELECTRICAL WORK ONLY

TEMPORARY SIGNAL SYSTEM

SCALE: 1"=20'

E-1

STATE OF CALIFORNIA - DEPARTMENT OF TRANSPORTATION
Caltrans
ELECTRICAL

FUNCTIONAL SUPERVISOR: TROY ARSENEAU
CALCULATED-DESIGNED BY: BRIAN FINCK
CHECKED BY: TODD LARK
REVISED BY
DATE REVISED

P:\PROJ\01\0B300\drafting\01_0B300\01120001141ua001.dgn

LAST REVISION 04-21-15
DATE PLOTTED => 06-JUL-2015
TIME PLOTTED => 12:00

Dist	COUNTY	ROUTE	POST MILES TOTAL PROJECT	SHEET No.	TOTAL SHEETS
01	DN	101	21.9	13	55

Brian T. Finck 4/30/15
REGISTERED ELECTRICAL ENGINEER DATE

May 1, 2015
PLANS APPROVAL DATE

REGISTERED PROFESSIONAL ENGINEER BRIAN T. FINCK No. 17756 Exp. 6-30-16 ELECTRICAL STATE OF CALIFORNIA

THE STATE OF CALIFORNIA OR ITS OFFICERS OR AGENTS SHALL NOT BE RESPONSIBLE FOR THE ACCURACY OR COMPLETENESS OF SCANNED COPIES OF THIS PLAN SHEET.

NOTE: (THIS SHEET)

1 WOOD POLES SHALL BE LOCATED OUTSIDE THE CLEAR RECOVERY ZONE OR PROTECTED IN PLACE.

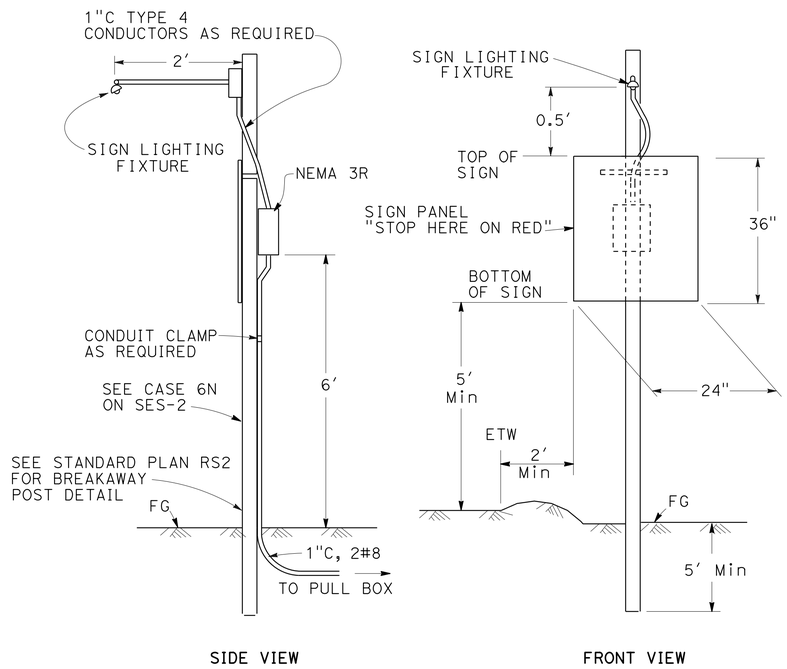

SIDE VIEW FRONT VIEW

TYPICAL SIGN ILLUMINATION

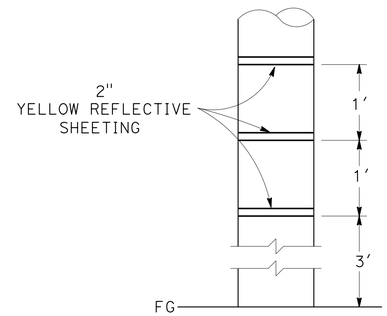

REFLECTIVE MARKING FOR WOOD POLE

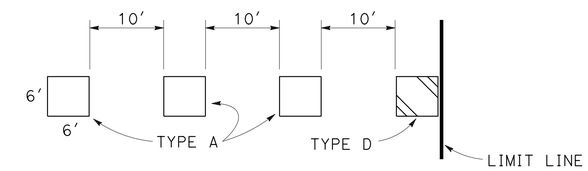

TYPICAL LOOP DETAIL

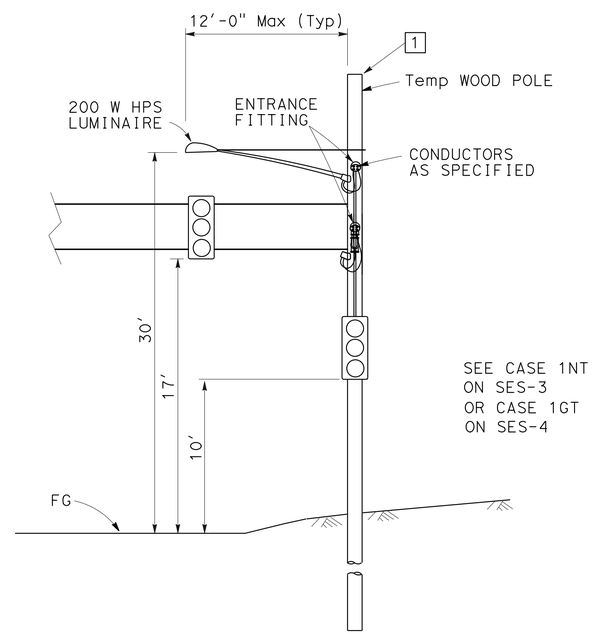

TEMPORARY TRAFFIC SIGNAL

SEE SES SHEETS FOR DETAILS

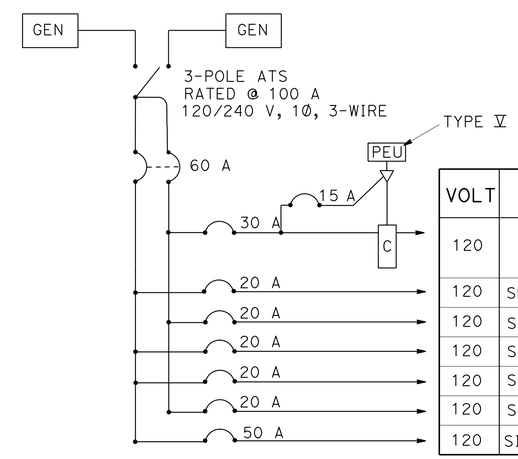

VOLT	NAMEPLATE DESCRIPTION
120	LIGHTING/ SIGN LIGHTING
120	SPARE
120	SPARE
120	SPARE
120	SPARE
120	SPARE
120	SIGNALS

SERVICE WIRING DIAGRAM

TYPE III-AF SERVICE EQUIPMENT ENCLOSURE

(DETAILS)

TEMPORARY SIGNAL SYSTEM

E-2

NO SCALE

REVISED BY	DATE REVISED
BRIAN FINCK	TODD LARK
CALCULATED-DESIGNED BY	CHECKED BY
FUNCTIONAL SUPERVISOR	TROY ARSENEAU

STATE OF CALIFORNIA - DEPARTMENT OF TRANSPORTATION
Caltrans
ELECTRICAL

P:\PROJ\01\0B300\drafting\01_0B300\01120001141ua002.dgn

LAST REVISION 04-21-15 | DATE PLOTTED => 06-JUL-2015 | TIME PLOTTED => 12:00

Dist	COUNTY	ROUTE	POST MILES TOTAL PROJECT	SHEET No.	TOTAL SHEETS
01	DN	101	21.9	14	55

Brian T. Finck 4/30/15
REGISTERED ELECTRICAL ENGINEER DATE

May 1, 2015
PLANS APPROVAL DATE

REGISTERED PROFESSIONAL ENGINEER
BRIAN T. FINCK
No. 17756
Exp. 6-30-16
ELECTRICAL
STATE OF CALIFORNIA

THE STATE OF CALIFORNIA OR ITS OFFICERS OR AGENTS SHALL NOT BE RESPONSIBLE FOR THE ACCURACY OR COMPLETENESS OF SCANNED COPIES OF THIS PLAN SHEET.

LEGEND:

A-h = AMPERE HOUR

NOTES: (THIS SHEET ONLY)

1. A HOOD SHALL BE INSTALLED ON EACH FLASHER HEAD TO SHIELD THE LENS FROM DIRECT EXPOSURE OF SOLAR RADIATION.
2. THIS UNIT SHALL BE LOCATED IN AN UNSHADED AREA. WOOD POLE WITH PHOTOVOLTAIC PANELS SHALL BE LOCATED OUTSIDE THE CLEAR RECOVERY ZONE OR PROTECTED IN PLACE.
3. SEE SHEET CS-1 FOR SIGNS (B) & (E) AND SHEET SCD-1 FOR SIGNS (G) & (H).

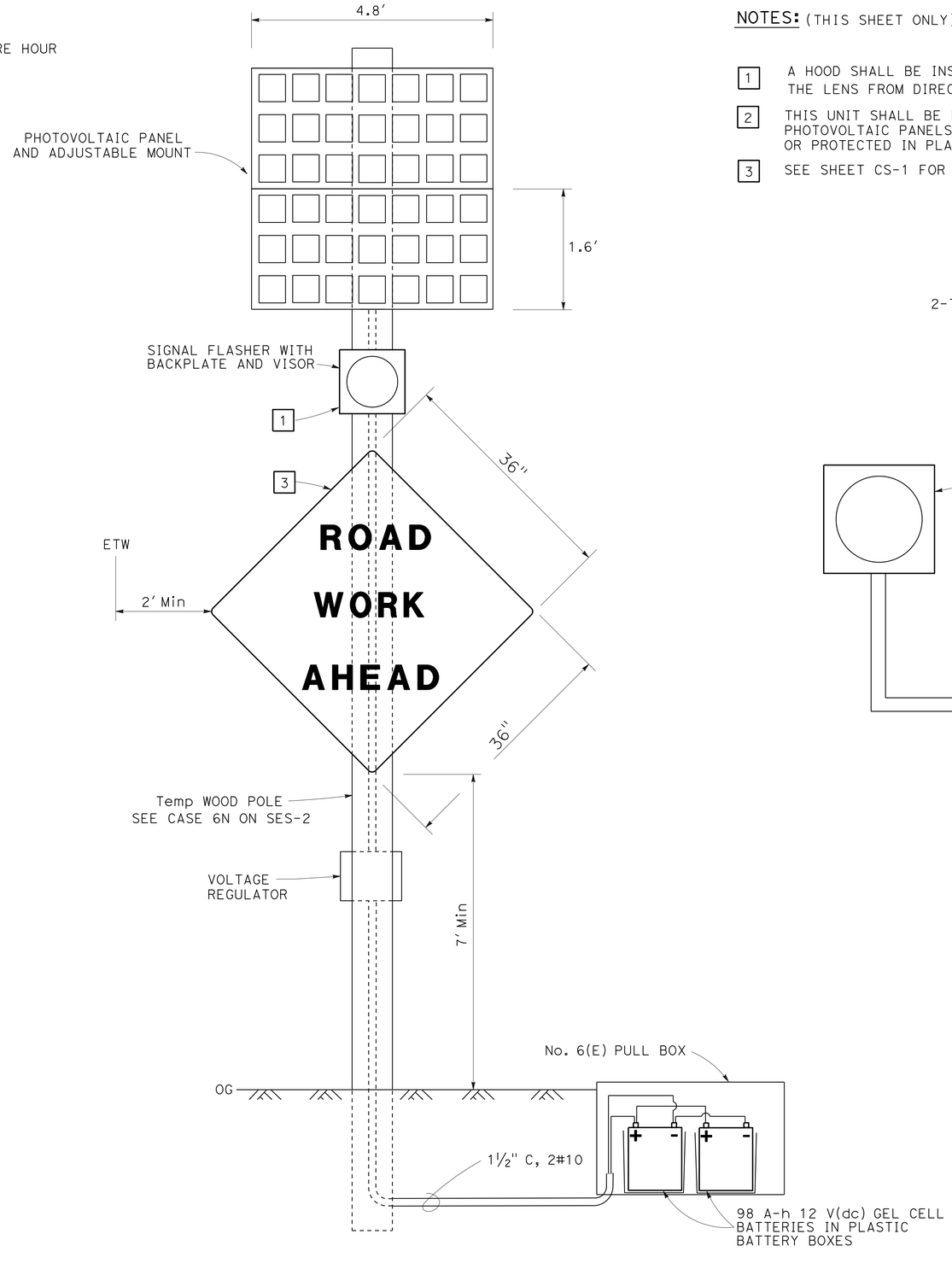

FLASHING BEACON (SOLAR POWERED)

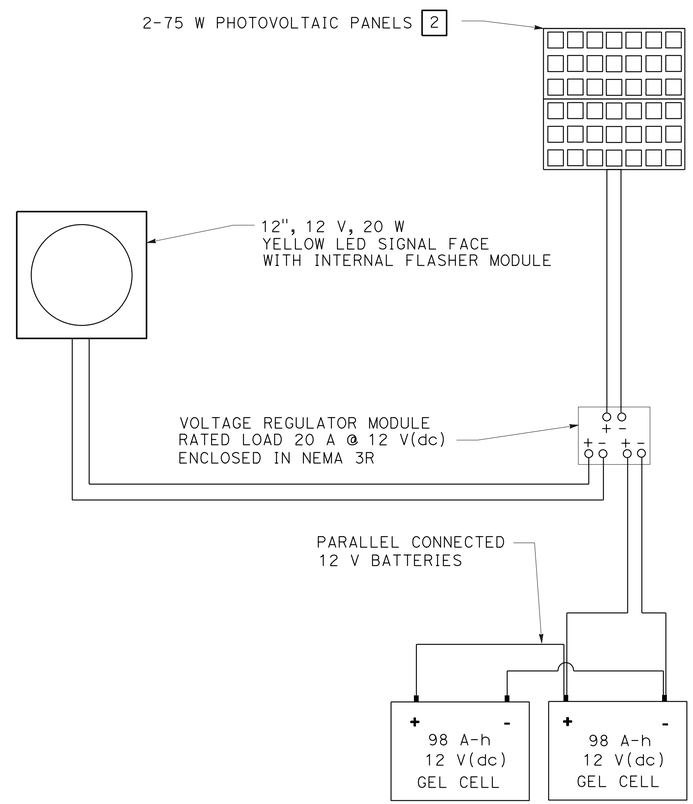

CONNECTION DIAGRAM

(DETAILS)

TEMPORARY SIGNAL SYSTEM

NO SCALE

E-3

REVISED BY | DATE REVISED
BRIAN FINCK | TODD LARK
CALCULATED-DESIGNED BY | CHECKED BY
FUNCTIONAL SUPERVISOR | TROY ARSENEAU
STATE OF CALIFORNIA - DEPARTMENT OF TRANSPORTATION
Caltrans® ELECTRICAL

P:\PROJ\01\0B300\drafting\01_0B300\01120001141ua003.dgn

LAST REVISION 04-21-15 | DATE PLOTTED => 06-JUL-2015 | TIME PLOTTED => 12:00

Dist	COUNTY	ROUTE	POST MILES TOTAL PROJECT	SHEET No.	TOTAL SHEETS
01	DN	101	21.9	15	55

Brian T. Finck 4/30/15
REGISTERED ELECTRICAL ENGINEER DATE

May 1, 2015
PLANS APPROVAL DATE

REGISTERED PROFESSIONAL ENGINEER
BRIAN T. FINCK
No. 17756
Exp. 6-30-16
ELECTRICAL
STATE OF CALIFORNIA

THE STATE OF CALIFORNIA OR ITS OFFICERS OR AGENTS SHALL NOT BE RESPONSIBLE FOR THE ACCURACY OR COMPLETENESS OF SCANNED COPIES OF THIS PLAN SHEET.

NOTE:

THE QUANTITIES ON THIS SHEET ARE NOT SEPARATE PAY ITEMS AND ARE FOR INFORMATION ONLY.

TEMPORARY SIGNAL SYSTEM

SHEET NUMBER	WOOD POLE	2" CONDUIT TYPE 3	GENERATOR	#5 PULL BOX	#6 PULL BOX	3 SECTION SIGNAL HEAD	FBCA	SIGN LIGHTING FIXTURE	200 W HPS LUMINAIRE	MESSENGER CABLE	TYPE D LOOP	TYPE A LOOP	DLC	#4 CONDUCTORS	#6 CONDUCTORS	#8 CONDUCTORS	#8 CONDUCTORS (G)	#10 CONDUCTORS	#12 CONDUCTORS	NEMA 3R SERVICE ENCLOSEURE	MODEL 332L CABINET FOUNDATION PLATFORM	UPS
	EA	LF	EA	EA	EA	EA	EA	EA	EA	LF	EA	EA	LF	LF	LF	LF	LF	LF	LF	EA	EA	EA
E-1	10	900	2	10	6	6	6	2	2	100	2	8	1500	100	50	1500	1250	1250	2500	1	1	1

ELECTRICAL QUANTITIES
E-4

REVISED BY	DATE REVISED

CALCULATED-DESIGNED BY	BRIAN FINCK
CHECKED BY	TODD LARK
FUNCTIONAL SUPERVISOR	TROY ARSENEAU

STATE OF CALIFORNIA - DEPARTMENT OF TRANSPORTATION
Caltrans
ELECTRICAL

P:\PROJ\01\0B300\draffing\01_0B300\01120001141ua004.dgn

LAST REVISION 04-21-15 | DATE PLOTTED => 06-JUL-2015 | TIME PLOTTED => 12:00

M

Maint	MAINTENANCE
Max	MAXIMUM
MB	METAL BEAM
MBB	METAL BEAM BARRIER
MBGR	METAL BEAM GUARD RAILING
Med	MEDIAN
MGS	MIDWEST GUARDRAIL SYSTEM
MH	MANHOLE
Min	MINIMUM
Misc	MISCELLANEOUS
Misc I & S	MISCELLANEOUS IRON AND STEEL
Mkr	MARKER
Mod	MODIFIED,
	MODIFY
Mon	MONUMENT
MP	METAL PLATE
MPGR	METAL PLATE GUARD RAILING
MR	MOVEMENT RATING
MSE	MECHANICALLY STABILIZED EMBANKMENT
Mt	MOUNTAIN, MOUNT
Mtl	MATERIAL
MVP	MAINTENANCE VEHICLE PULLOUT

N

N	NORTH
NB	NORTHBOUND
No.	NUMBER (MUST HAVE PERIOD)
Nos.	NUMBERS (MUST HAVE PERIOD)
NPS	NOMINAL PIPE SIZE
NS	NEAR SIDE
NSP	NEW STANDARD PLAN
NTS	NOT TO SCALE

O

Oblr	OBLITERATE
OC	OVERCROSSING
OD	OUTSIDE DIAMETER
OF	OUTSIDE FACE
OG	ORIGINAL GROUND
OGAC	OPEN GRADED ASPHALT CONCRETE
OGFC	OPEN GRADED FRICTION COURSE
OH	OVERHEAD
OHWM	ORDINARY HIGH WATER MARK
O-O	OUT TO OUT
Opp	OPPOSITE
OSD	OVERSIDE DRAIN

P

P	PAGE
PAP	PERFORATED ALUMINUM PIPE
PB	PULL BOX
PC	POINT OF CURVATURE,
	PRECAST
PCC	POINT OF COMPOUND CURVE,
	PORTLAND CEMENT CONCRETE
PCMS	PORTABLE CHANGEABLE MESSAGE SIGN
PCP	PERFORATED CONCRETE PIPE,
	PRESTRESSED CONCRETE PIPE
PCVC	POINT OF COMPOUND VERTICAL CURVE
PEC	PERMIT TO ENTER AND CONSTRUCT
Ped	PEDESTRIAN
Ped OC	PEDESTRIAN OVERCROSSING
Ped UC	PEDESTRIAN UNDERCROSSING
Perm Mtl	PERMEABLE MATERIAL

P continued

PG	PROFILE GRADE
PI	POINT OF INTERSECTION
PJP	PARTIAL JOINT PENETRATION
Pkwy	PARKWAY
ℙ,PL	PLATE
P/L	PROPERTY LINE
PM	POST MILE,
	TIME FROM NOON TO MIDNIGHT
PN	PAVING NOTCH
POC	POINT OF HORIZONTAL CURVE
POT	POINT OF TANGENT
POVC	POINT OF VERTICAL CURVE
PP	PIPE PILE,
	PLASTIC PIPE,
	POWER POLE
PPL	PREFORMED PERMEABLE LINER
PPP	PERFORATED PLASTIC PIPE
PRC	POINT OF REVERSE CURVE
PRF	PAVEMENT REINFORCING FABRIC
PRVC	POINT OF REVERSE VERTICAL CURVE
PS&E	PLANS, SPECIFICATIONS AND ESTIMATES
PS, P/S	PRESTRESSED
PSP	PERFORATED STEEL PIPE
PT	POINT OF TANGENCY
PVC	POLYVINYL CHLORIDE
Pvmt	PAVEMENT

Q

Qty	QUANTITY

R

R	RADIUS
R & D	REMOVE AND DISPOSE
R & S	REMOVE AND SALVAGE
R/C	RATE OF CHANGE
RCA	REINFORCED CONCRETE ARCH
RCB	REINFORCED CONCRETE BOX
RCP	REINFORCED CONCRETE PIPE
RCPA	REINFORCED CONCRETE PIPE ARCH
Rd	ROAD
Reinf	REINFORCED,
	REINFORCEMENT,
	REINFORCING
Rel	RELOCATE
Repl	REPLACEMENT
Ret	RETAINING
Rev	REVISED, REVISION
Rdwy	ROADWAY
RHMA	RUBBERIZED HOT MIX ASPHALT
Riv	RIVER
RM	ROAD-MIXED
RP	RADIUS POINT,
	REFERENCE POINT
RR	RAILROAD
RSP	ROCK SLOPE PROTECTION,
	REVISED STANDARD PLAN
Rt	RIGHT
Rte	ROUTE
RW	REDWOOD,
	RETAINING WALL
R/W	RIGHT OF WAY
Rwy	RAILWAY

S

S	SOUTH,
	SUPPLEMENT
SAE	STRUCTURE APPROACH EMBANKMENT
Salv	SALVAGE
SAPP	STRUCTURAL ALUMINUM PLATE PIPE
SB	SOUTHBOUND
SC	SAND CUSHION
SCSP	SLOTTED CORRUGATED STEEL PIPE
SD	STORM DRAIN
Sec	SECOND,
	SECTION
Sep	SEPARATION
SG	SUBGRADE
Shld	SHOULDER
Sht	SHEET
Sim	SIMILAR
₤	STATION LINE
SM	SELECTED MATERIAL
Spec	SPECIAL,
	SPECIFICATIONS
SPP	SLOTTED PLASTIC PIPE
SS	SLOPE STAKE
SSBM	STRAP AND SADDLE BRACKET METHOD
SSD	STRUCTURAL SECTION DRAIN
SSPA	STRUCTURAL STEEL PLATE ARCH
SSPP	STRUCTURAL STEEL PLATE PIPE
SSPPA	STRUCTURAL STEEL PLATE PIPE ARCH
SSRP	STEEL SPIRAL RIB PIPE
St	STREET
Sta	STATION
STBB	SINGLE THRIE BEAM BARRIER
Std	STANDARD
Str	STRUCTURE
Surf	SURFACING
SW	SIDEWALK,
	SOUND WALL
Swr	SEWER
Sym	SYMMETRICAL
S4S	SURFACE 4 SIDES

T

T	SEMI-TANGENT
Tan	TANGENT
TBB	THRIE BEAM BARRIER
Tbr	TIMBER
TC	TOP OF CURB
TCB	TRAFFIC CONTROL BOX
TCE	TEMPORARY CONSTRUCTION EASEMENT
Tel	TELEPHONE
Temp	TEMPORARY
TG	TOP OF GRADE
Tot	TOTAL
TP	TELEPHONE POLE
TPB	TREATED PERMEABLE BASE
TPM	TREATED PERMEABLE MATERIAL
Trans	TRANSITION

T continued

TS	TRANSVERSE,
	TRAFFIC SIGNAL,
	TUBULAR STEEL
Typ	TYPICAL

U

UC	UNDERCROSSING
UD	UNDERDRAIN
UG	UNDERGROUND
UON	UNLESS OTHERWISE NOTED
UP	UNDERPASS

V

V	VALVE,
	DESIGN SPEED
Var	VARIABLE,
	VARIES
VC	VERTICAL CURVE
VCP	VITRIFIED CLAY PIPE
Vert	VERTICAL
Via	VIADUCT
Vol	VOLUME

W

W	WEST,
	WIDTH
WB	WESTBOUND
WH	WEEP HOLE
WM	WIRE MESH
WS	WATER SURFACE
WSP	WELDED STEEL PIPE
Wt	WEIGHT
WV	WATER VALVE
WW	WINGWALL
WWLOL	WINGWALL LAYOUT LINE

X

X Sec	CROSS SECTION
Xing	CROSSING

Y

Yr	YEAR
Yrs	YEARS

Dist	COUNTY	ROUTE	POST MILES TOTAL PROJECT	SHEET No.	TOTAL SHEETS
01	DN	101	21.9	16	55

Grace M. Tsushima
REGISTERED CIVIL ENGINEER

July 19, 2013
PLANS APPROVAL DATE

REGISTERED PROFESSIONAL ENGINEER Grace M. Tsushima No. C49814 Exp. 9-30-14 CIVIL STATE OF CALIFORNIA

THE STATE OF CALIFORNIA OR ITS OFFICERS OR AGENTS SHALL NOT BE RESPONSIBLE FOR THE ACCURACY OR COMPLETENESS OF SCANNED COPIES OF THIS PLAN SHEET.

TO ACCOMPANY PLANS DATED 5-01-15

UNIT OF MEASUREMENT SYMBOLS:

Some of the symbols used in the project plan quantity tables and in the Bid Item List are:

TABLE A

SYMBOL USED	DEFINITIONS
ACRE	ACRE
CF	CUBIC FOOT
CY	CUBIC YARD
EA	EACH
GAL	GALLON
LB	POUND
LF	LINEAR FOOT
SQFT	SQUARE FOOT
SQYD	SQUARE YARD
STA	100 FEET
TAB	TABLET
TON	2,000 POUNDS

Some of the symbols used in the plans other than in the project plan quantity tables are:

TABLE B

SYMBOL USED	DEFINITIONS
ksi	KIPS PER SQUARE INCH
ksf	KIPS PER SQUARE FOOT
psi	POUNDS PER SQUARE INCH
psf	POUNDS PER SQUARE FOOT
lb/ft^3, pcf	POUNDS PER CUBIC FOOT
tsf	TONS PER SQUARE FOOT
mph, MPH *	MILES PER HOUR
ø	NOMINAL DIAMETER
oz	OUNCE
lb	POUND
kip	1,000 POUNDS
cal	CALORIE
ft	FOOT OR FEET
gal	GALLON

* For use on a sign panel only

STATE OF CALIFORNIA
DEPARTMENT OF TRANSPORTATION

ABBREVIATIONS (SHEET 2 OF 2)

NO SCALE

RSP A10B DATED JULY 19, 2013 SUPERSEDES STANDARD PLAN A10B DATED MAY 20, 2011 - PAGE 2 OF THE STANDARD PLANS BOOK DATED 2010.

REVISED STANDARD PLAN RSP A10B

2010 REVISED STANDARD PLAN RSP A10B

P:\PROJ\01\0B300\drafting\01_0B300\va001.dgn

6-7-13

Dist	COUNTY	ROUTE	POST MILES TOTAL PROJECT	SHEET No.	TOTAL SHEETS
01	DN	101	21.9	17	55

Roberta L. McLaughlin
REGISTERED CIVIL ENGINEER

April 20, 2012
PLANS APPROVAL DATE

REGISTERED PROFESSIONAL ENGINEER
Roberta L. McLaughlin
No. C40375
Exp. 3-31-13
CIVIL
STATE OF CALIFORNIA

THE STATE OF CALIFORNIA OR ITS OFFICERS OR AGENTS SHALL NOT BE RESPONSIBLE FOR THE ACCURACY OR COMPLETENESS OF SCANNED COPIES OF THIS PLAN SHEET.

TO ACCOMPANY PLANS DATED 5-01-15

2010 REVISED STANDARD PLAN RSP A24A

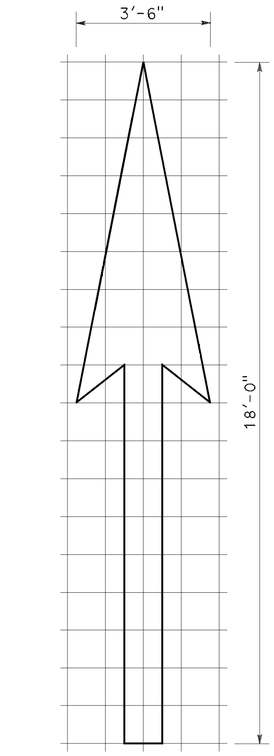

A=25 ft^2

TYPE I 18'-0" ARROW

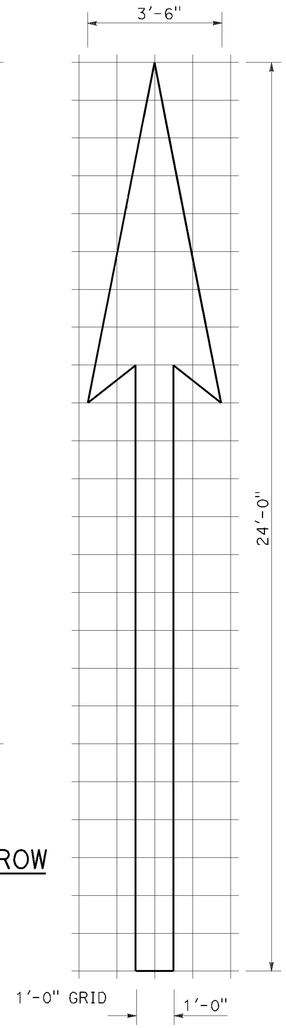

A=31 ft^2

TYPE I 24'-0" ARROW

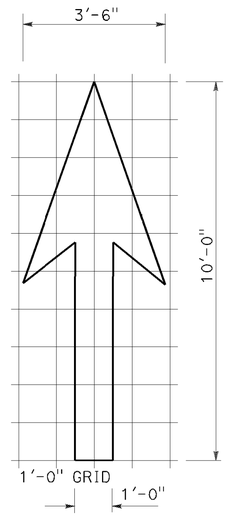

A=14 ft^2

TYPE I 10'-0" ARROW

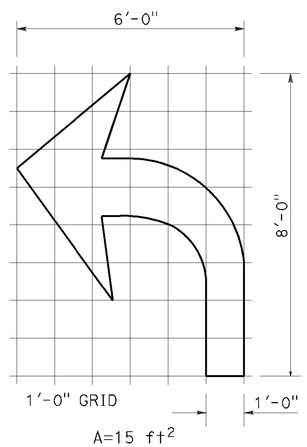

A=15 ft^2

TYPE IV (L) ARROW

(For Type IV (R) arrow, use mirror image)

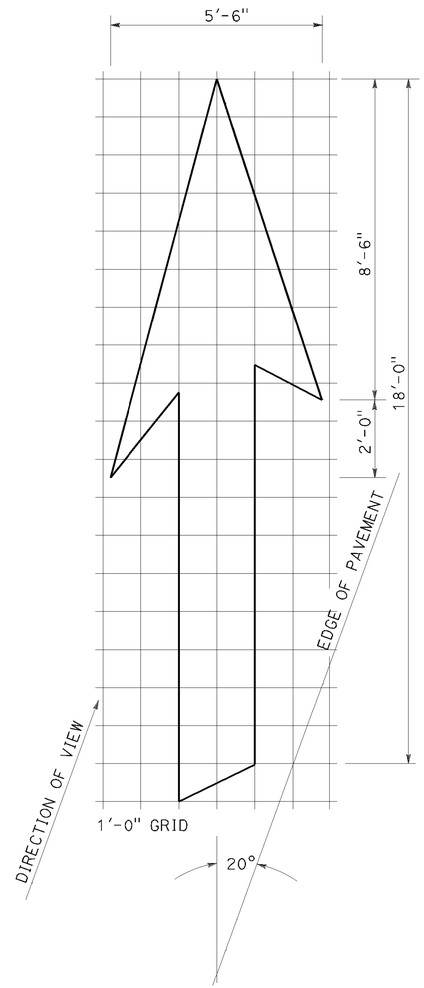

A=42 ft^2

TYPE VI ARROW

Right lane drop arrow (For left lane, use mirror image)

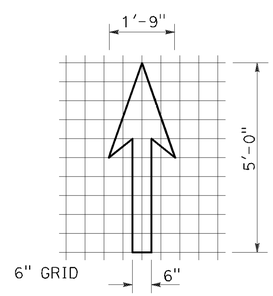

A=3.5 ft^2

BIKE LANE ARROW

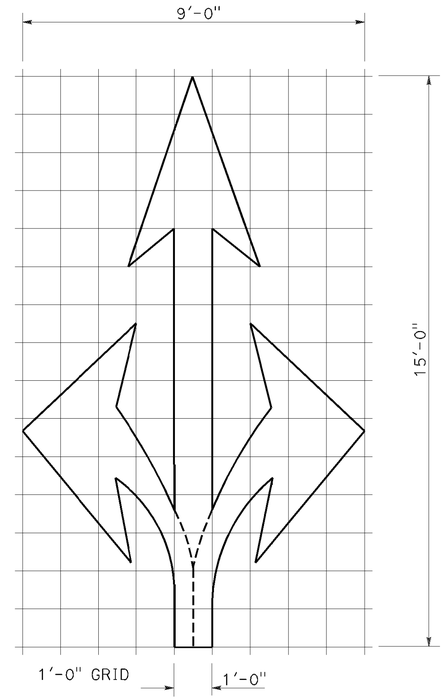

A=36 ft^2

TYPE VIII ARROW

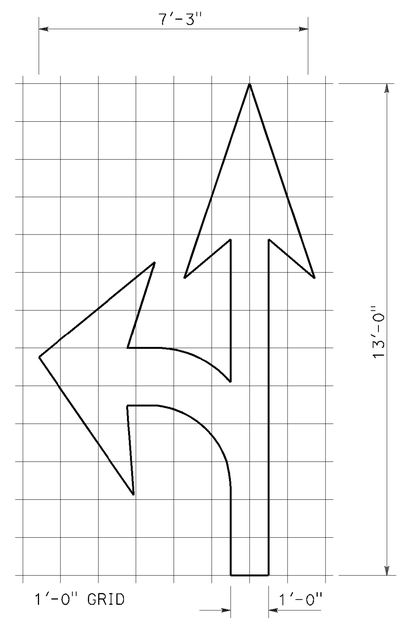

A=27 ft^2

TYPE VII (L) ARROW

(For Type VII (R) arrow, use mirror image)

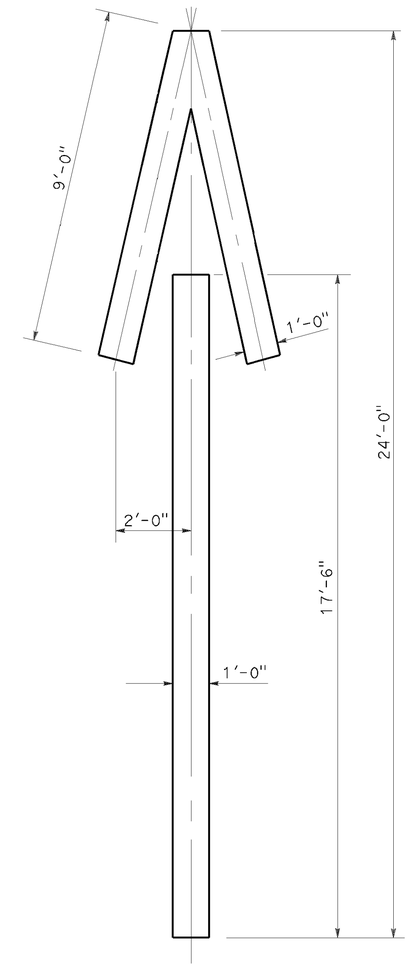

A=33 ft^2

TYPE V ARROW

NOTE:
Minor variations in dimensions may be accepted by the Engineer.

STATE OF CALIFORNIA
DEPARTMENT OF TRANSPORTATION

PAVEMENT MARKINGS ARROWS

NO SCALE

RSP A24A DATED APRIL 20, 2012 SUPERSEDES STANDARD PLAN A24A DATED MAY 20, 2011 - PAGE 13 OF THE STANDARD PLANS BOOK DATED 2010.

REVISED STANDARD PLAN RSP A24A

P:\PROJ\01\0B300\drafting\01_0B300\va002.dgn

3-14-12

Dist	COUNTY	ROUTE	POST MILES TOTAL PROJECT	SHEET No.	TOTAL SHEETS
01	DN	101	21.9	18	55

Randell D. Hiatt
REGISTERED CIVIL ENGINEER

January 23, 2015
PLANS APPROVAL DATE

REGISTERED PROFESSIONAL ENGINEER Randell D. Hiatt No. C50200 Exp. 6-30-15 CIVIL STATE OF CALIFORNIA

THE STATE OF CALIFORNIA OR ITS OFFICERS OR AGENTS SHALL NOT BE RESPONSIBLE FOR THE ACCURACY OR COMPLETENESS OF SCANNED COPIES OF THIS PLAN SHEET.

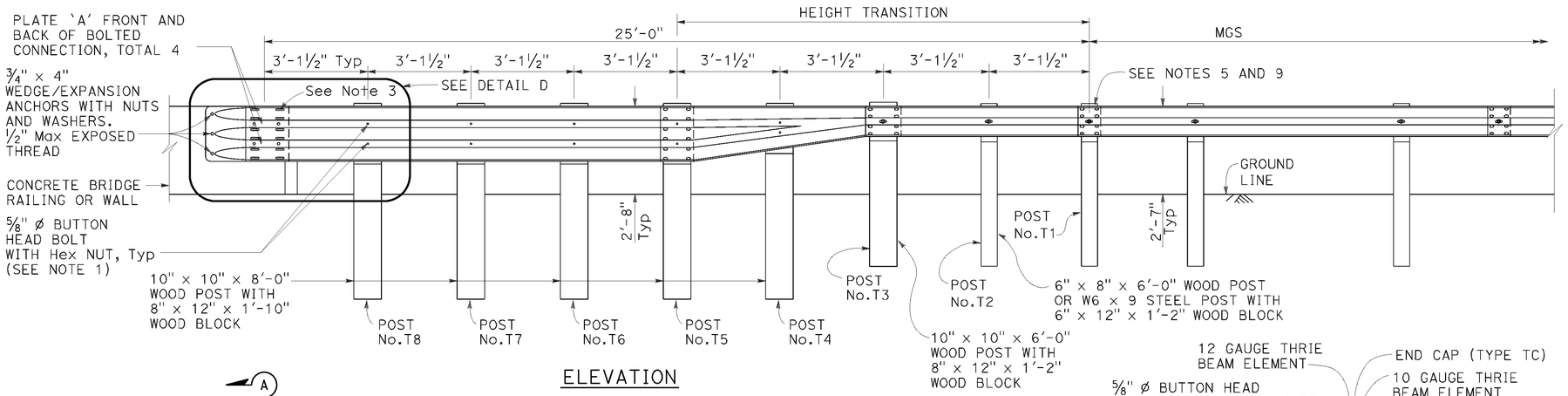

ELEVATION

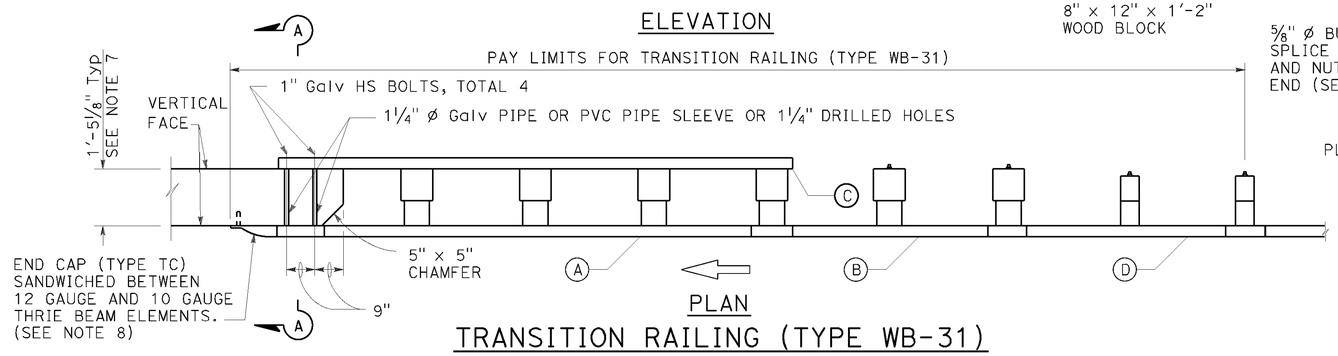

PLAN

TRANSITION RAILING (TYPE WB-31)

(No Blockout Attachment)

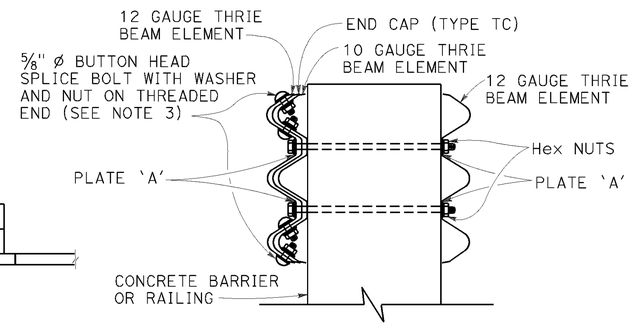

SECTION A-A

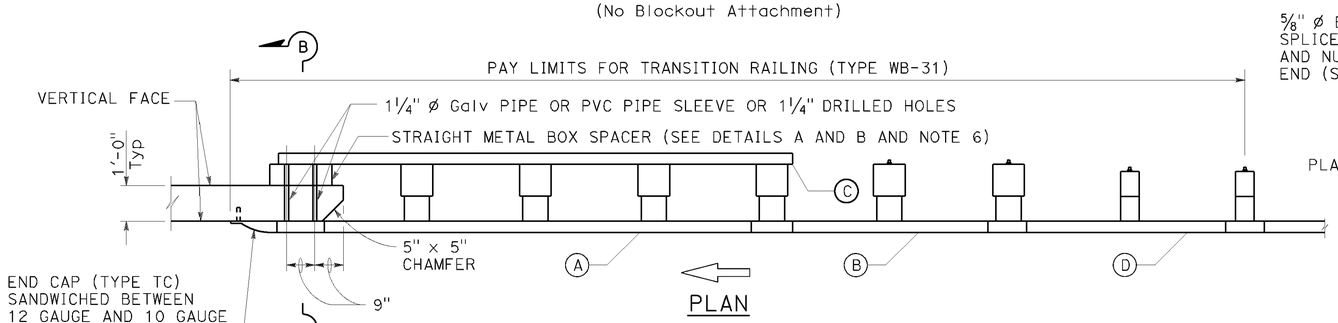

PLAN

TRANSITION RAILING (TYPE WB-31)

(Blockout Attachment)

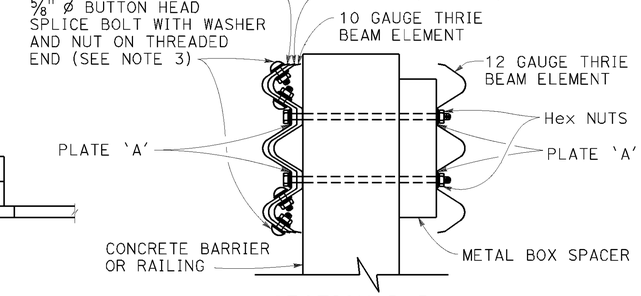

SECTION B-B

LEGEND:

(A) NESTED THRIE BEAM ELEMENTS (ONE 12 GAUGE ELEMENT NESTED OVER ONE 10 GAUGE ELEMENT).

(B) ONE ASYMMETRICAL 10 GAUGE "W" BEAM TO THRIE BEAM ELEMENT.

(C) ONE 12 GAUGE THRIE BEAM ELEMENT.

(D) ONE 10 GAUGE "W" BEAM RAIL ELEMENT (7'-3 1/2"LENGTH)

10 GAUGE = 0.138" THICK
12 GAUGE = 0.108" THICK

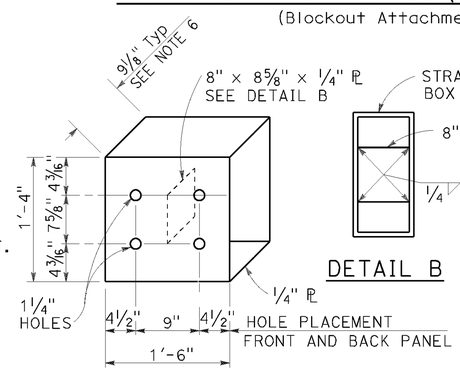

DETAIL A

STRAIGHT METAL BOX SPACER

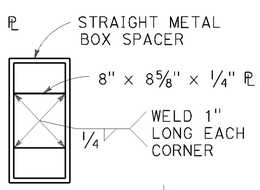

DETAIL B

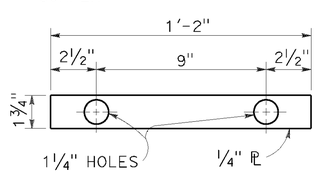

DETAIL C

PLATE 'A'

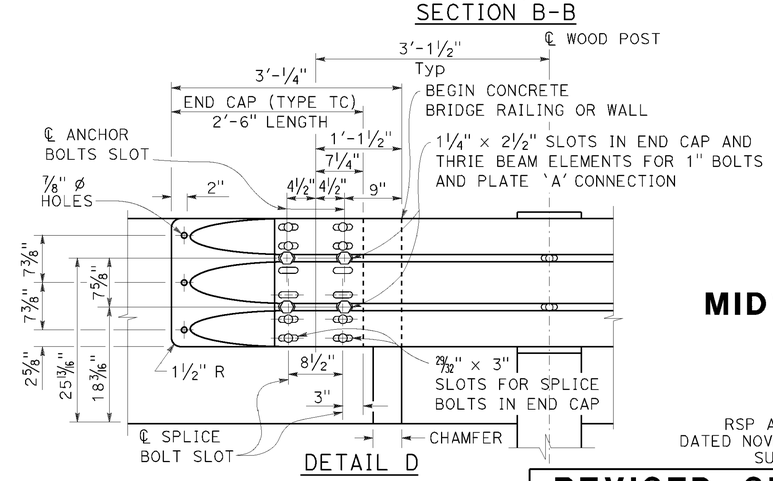

DETAIL D

NOTES: TO ACCOMPANY PLANS DATED 5-01-15

1. Use 5/8" ø Button head bolts and hex nuts for connections to posts. No washer on rail face for bolted connections to post.

2. The nested rail elements, end cap, and 'W' beam to thrie beam element may be spliced together prior to bolting the elements to the wood post and concrete barrier or railing.

3. Exterior splice bolt holes for rail element splices at Post No. T5 and the connection to the concrete barrier or railing shall be the standard 29/32" x 1 1/8" slot size. Interior splice bolt holes at these locations may be increased up to 1 1/4" ø. Only the top 4 and the bottom 4 splice bolts with washers and nuts are required for rail splices at Post No. T5 and the connection to the concrete barrier or railing.

4. The top elevation of Posts No. T2 through No. T7 shall not project more than 1" above the top elevation of the rail element.

5. Typically, the railing connected to Transition Railing (Type WB-31) will be either standard railing section of MGS with height transition ratio of 150:1 or a Caltrans approved 31" end treatment attached to Post No. T1.

6. The depth of the metal box spacer varies from the 9 1/8" to 1 1/2" and is dependent on the width of the concrete railing or wall. The combined dimension for the depth of the metal box spacer plus the width of railing or wall is typically 21 1/8". Where the space between the backside of the concrete railing or wall and the rear thrie beam element is less than 1 1/2", metal plates similar to Plate 'A' are to be used as spacers.

7. Where the width of the concrete railing or wall is greater than 17 1/8", wood blocks are to be used to fill the space created between the backside of Posts No. T5 through No. T8 and the rear thrie beam element. These wood blocks shall be 8" in width and 1'-2" in length. The dimension between the front thrie beam element and the rear thrie beam element is to match the width of the concrete railing or wall.

8. End cap may be installed over 12 gauge and 10 gauge thrie beam elements where transition railing is installed on the departure end of bridge railing.

9. Conform standard railing section height to 31" at Post No. T1 using height transition ratio of 150:1.

STATE OF CALIFORNIA
DEPARTMENT OF TRANSPORTATION

MIDWEST GUARDRAIL SYSTEM TRANSITION RAILING (TYPE WB-31)

NO SCALE

RSP A77U4 DATED JANUARY 23, 2015 SUPERSEDES RSP A77U4 DATED NOVEMBER 15, 2013 AND RSP A77U4 DATED JULY 19, 2013 THAT SUPPLEMENTS THE STANDARD PLANS BOOK DATED 2010.

REVISED STANDARD PLAN RSP A77U4

2010 REVISED STANDARD PLAN RSP A77U4

P:\PROJ\01\0B300\drafting\01_0B300\va003.dgn

1-8-15

Dist	COUNTY	ROUTE	POST MILES TOTAL PROJECT	SHEET No.	TOTAL SHEETS
01	DN	101	21.9	19	55

REGISTERED CIVIL ENGINEER

April 20, 2012
PLANS APPROVAL DATE

REGISTERED PROFESSIONAL ENGINEER
Tillat Satter
No. C42892
Exp. 3-31-14
CIVIL
STATE OF CALIFORNIA

THE STATE OF CALIFORNIA OR ITS OFFICERS OR AGENTS SHALL NOT BE RESPONSIBLE FOR THE ACCURACY OR COMPLETENESS OF SCANNED COPIES OF THIS PLAN SHEET.

TO ACCOMPANY PLANS DATED 5-01-15

2010 REVISED STANDARD PLAN RSP B11-68

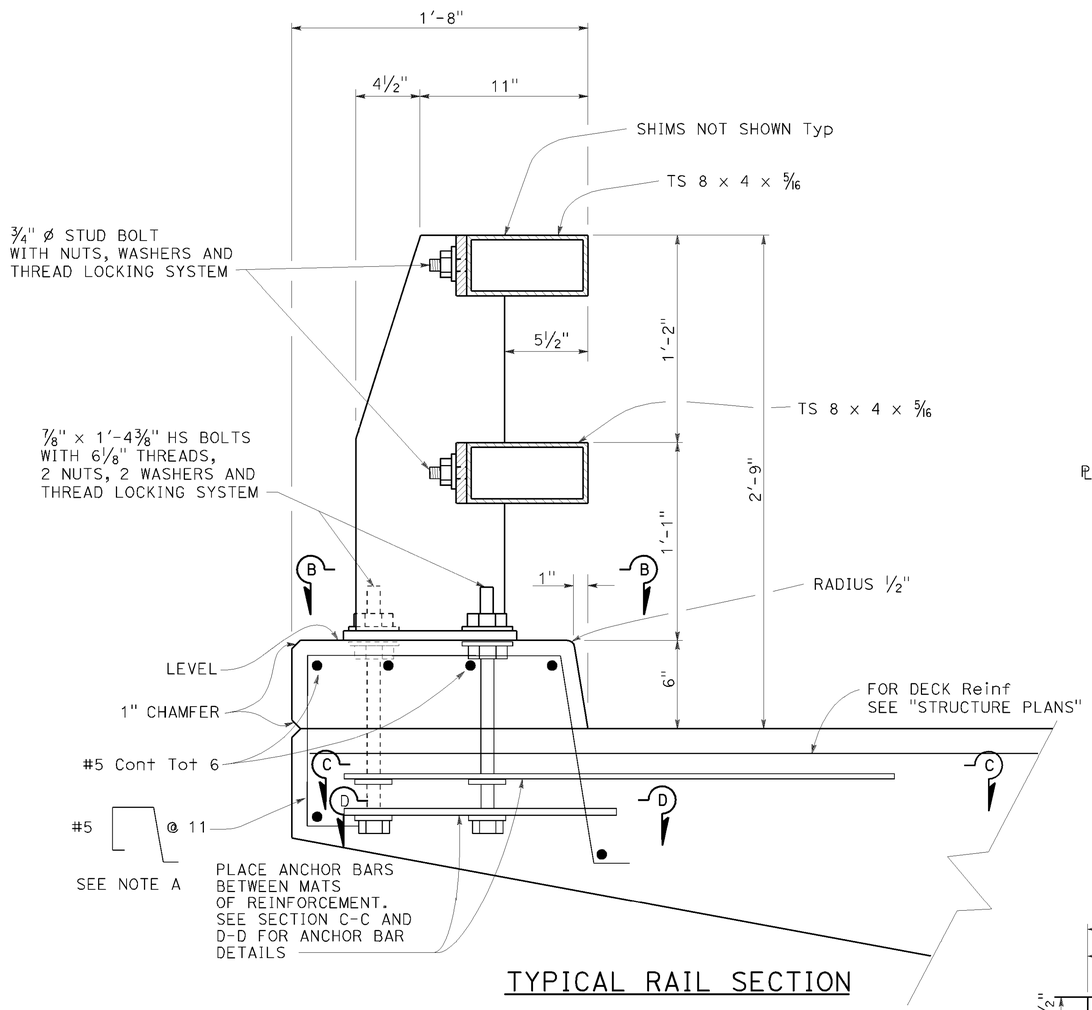

TYPICAL RAIL SECTION

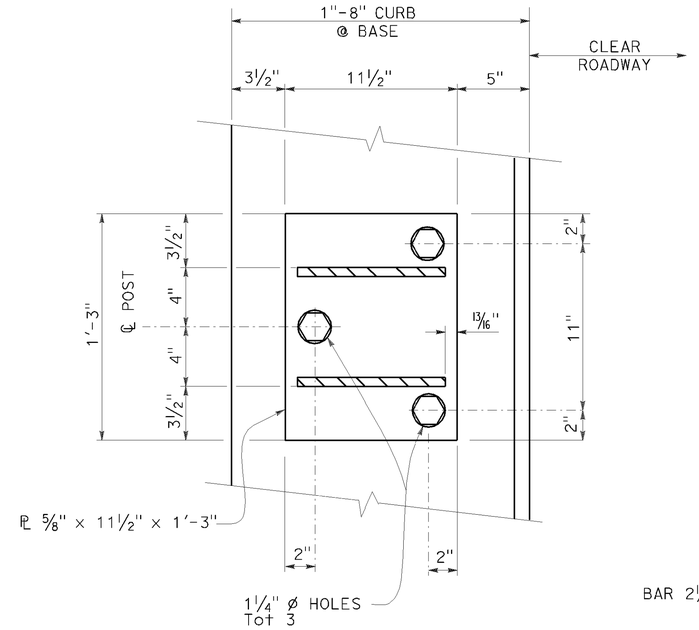

SECTION B-B

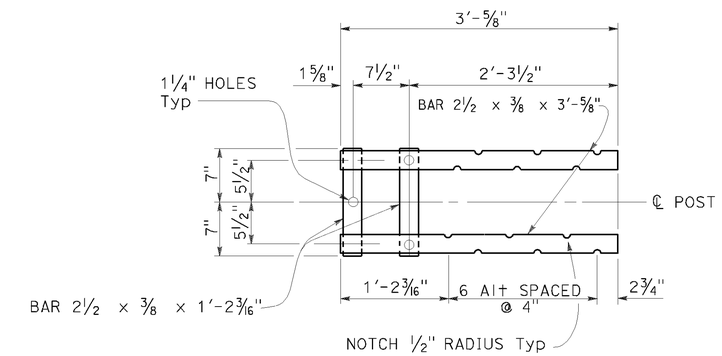

SECTION C-C
Top Anchorage

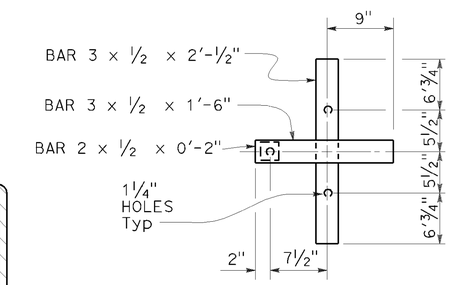

SECTION D-D
Lower Anchorage

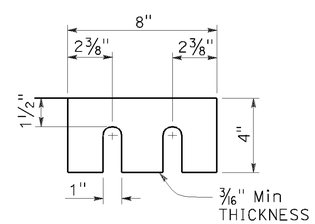

SHIMS REQUIRED FOR TOP AND BOTTOM RAIL

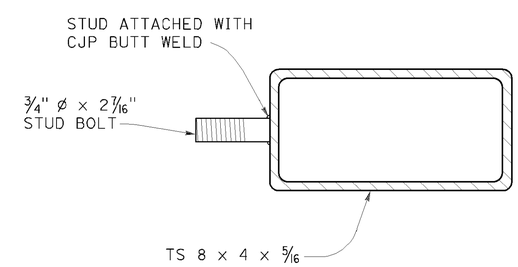

SECTION AT POST

STUD BOLT DETAIL

NOTE A

Adjust spacing to clear scupper opening by 2" if applicable.

STATE OF CALIFORNIA
DEPARTMENT OF TRANSPORTATION

CALIFORNIA ST-10 BRIDGE RAIL (SHEET 1 OF 3)

NO SCALE

RSP B11-68 DATED APRIL 20, 2012 SUPERSEDES STANDARD PLAN B11-68 DATED MAY 20, 2011 - PAGE 308 OF THE STANDARD PLANS BOOK DATED 2010.

REVISED STANDARD PLAN RSP B11-68

P:\PROJ\01\0B300\drafting\01_0B300\va004.dgn

3-23-12

Dist	COUNTY	ROUTE	POST MILES TOTAL PROJECT	SHEET No.	TOTAL SHEETS
01	DN	101	21.9	20	55

REGISTERED CIVIL ENGINEER

July 19, 2013
PLANS APPROVAL DATE

REGISTERED PROFESSIONAL ENGINEER Tillat Satter No. C42892 Exp. 3-31-14 CIVIL STATE OF CALIFORNIA

THE STATE OF CALIFORNIA OR ITS OFFICERS OR AGENTS SHALL NOT BE RESPONSIBLE FOR THE ACCURACY OR COMPLETENESS OF SCANNED COPIES OF THIS PLAN SHEET.

TO ACCOMPANY PLANS DATED 5-01-15

2010 REVISED STANDARD PLAN RSP B11-70

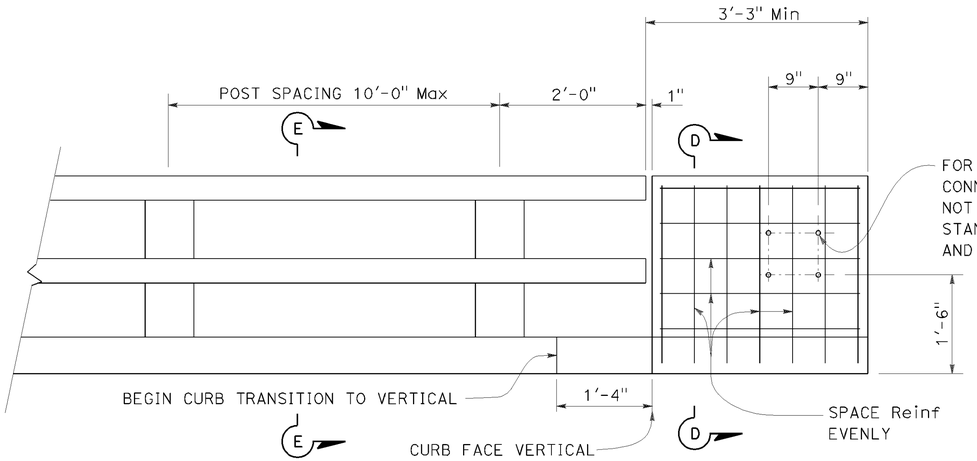

END OF RAILING ELEVATION

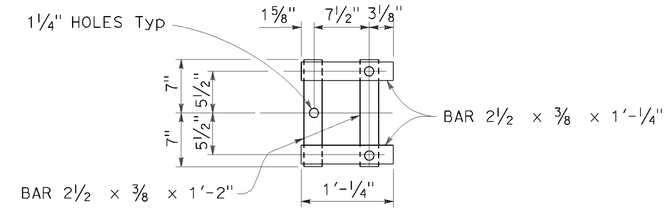

WALL ANCHOR PLATE DETAIL

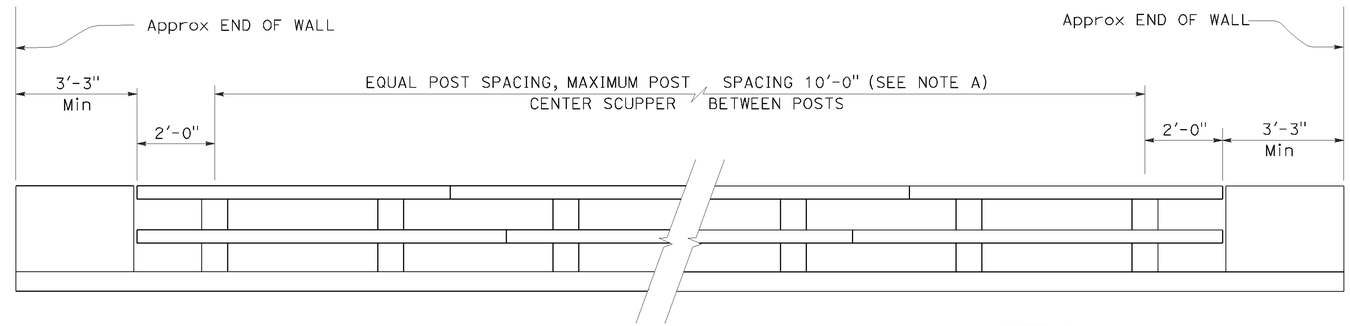

BRIDGE RAILING ELEVATION

NOTE A:

Post spacing and/or block length to be adjusted to fit bridge length or wingwall length.

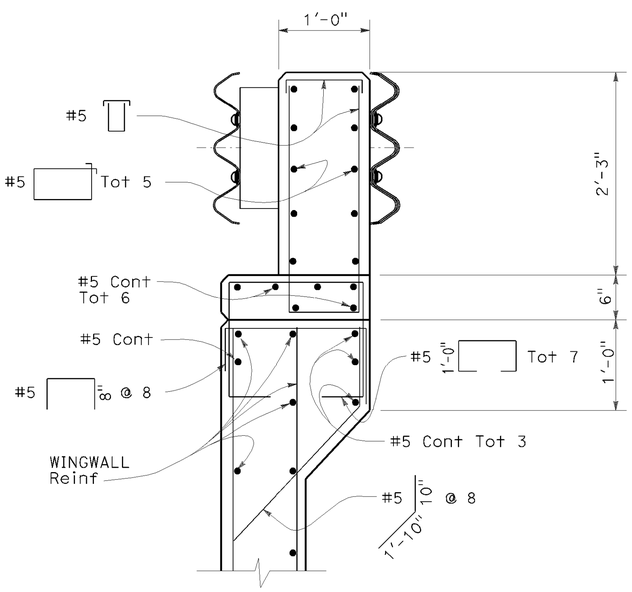

SECTION D-D

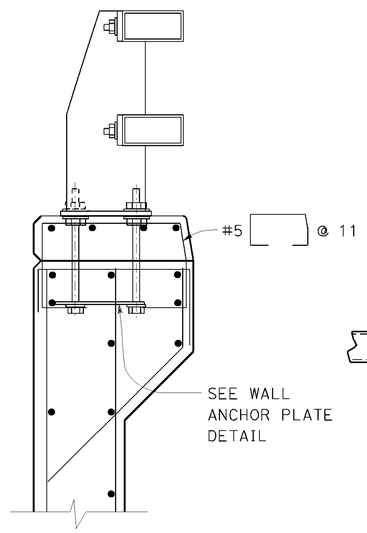

SECTION E-E

Reinf same as for Section D-D except as noted.

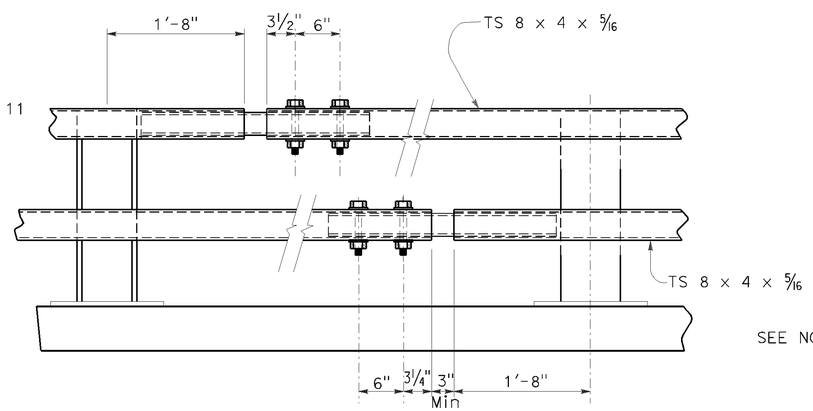

EXPANSION SPLICE

NOTE B:

Use ¾" * x 5⅝"
Hs bolts with washers, fully tensioned.
1" holes in rail Typ

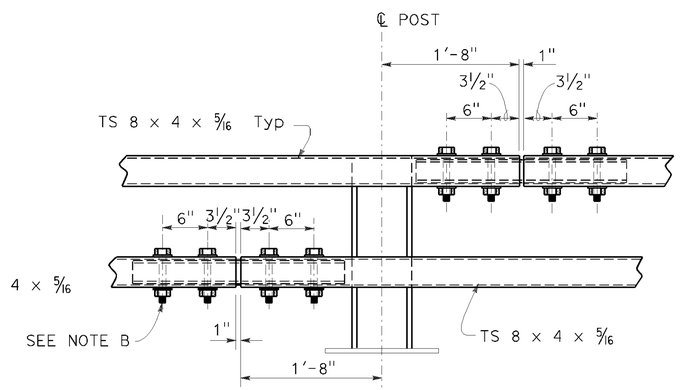

STANDARD SPLICE

STATE OF CALIFORNIA
DEPARTMENT OF TRANSPORTATION

CALIFORNIA ST-10 BRIDGE RAIL (SHEET 3 OF 3)

NO SCALE

RSP B11-70 DATED JULY 19, 2013 SUPERSEDES STANDARD PLAN B11-70 DATED MAY 20, 2011 - PAGE 310 OF THE STANDARD PLANS BOOK DATED 2010.

REVISED STANDARD PLAN RSP B11-70

P:\PROJ\01\08300\drafting\01_08300\va005.dgn

6-27-13

Dist	COUNTY	ROUTE	POST MILES TOTAL PROJECT	SHEET No.	TOTAL SHEETS
01	DN	101	21.9	21	55

Theresa Gabriel
REGISTERED ELECTRICAL ENGINEER

July 19, 2013
PLANS APPROVAL DATE

REGISTERED PROFESSIONAL ENGINEER
Theresa Aziz Gabriel
No. E15129
Exp. 6-30-14
ELECTRICAL
STATE OF CALIFORNIA

THE STATE OF CALIFORNIA OR ITS OFFICERS OR AGENTS SHALL NOT BE RESPONSIBLE FOR THE ACCURACY OR COMPLETENESS OF SCANNED COPIES OF THIS PLAN SHEET.

TO ACCOMPANY PLANS DATED 5-01-15

LEGEND:

AB	ABANDON. IF APPLIED TO CONDUIT, REMOVE CONDUCTORS
BC	INSTALL PULL BOX IN EXISTING CONDUIT RUN
BP	PEDESTRIAN BARRICADE, TYPE AS INDICATED ON PLAN
CB	INSTALL CONDUIT INTO EXISTING PULL BOX
CC	CONNECT NEW AND EXISTING CONDUIT. REMOVE EXISTING CONDUCTORS AND INSTALL CONDUCTORS AS INDICATED
CF	CONDUIT TO REMAIN FOR FUTURE USE. REMOVE CONDUCTORS. INSTALL PULL TAPE
DH	DETECTOR HANDHOLE
FA	FOUNDATION TO BE ABANDONED
IS	INSTALL SIGN ON SIGNAL MAST ARM
NS	NO SLIP BASE ON STANDARD
PEC	PHOTOELECTRIC CONTROL
PEU	PHOTOELECTRIC UNIT
RC	EQUIPMENT OR MATERIAL TO BE REMOVED AND BECOME THE PROPERTY OF THE CONTRACTOR
RE	REMOVE ELECTROLIER, FUSES AND BALLAST. TAPE ENDS OF CONDUCTORS
RL	RELOCATE EQUIPMENT
RR	REMOVE AND REUSE EQUIPMENT
RS	REMOVE AND SALVAGE EQUIPMENT
SC	SPLICE NEW TO EXISTING CONDUCTORS
SD	SERVICE DISCONNECT
TSP	TELEPHONE SERVICE POINT

ABBREVIATIONS

APS	ACCESSIBLE PEDESTRIAN SIGNAL
BBS	BATTERY BACKUP SYSTEM
BC	BOLT CIRCLE
BPB	BICYCLE PUSH BUTTON
C	CONDUIT
CB	CIRCUIT BREAKER
CCTV	CLOSED CIRCUIT TELEVISION
Ckt	CIRCUIT
CMS	CHANGEABLE MESSAGE SIGN
Ctid	CALTRANS IDENTIFICATION
Comm	COMMUNICATION
DLC	LOOP DETECTOR LEAD-IN CABLE
EMS	EXTINGUISHABLE MESSAGE SIGN
EVUC	EMERGENCY VEHICLE UNIT CABLE
EVUD	EMERGENCY VEHICLE UNIT DETECTOR
FB	FLASHING BEACON
FBCA	FLASHING BEACON CONTROL ASSEMBLY
FBS	FLASHING BEACON WITH SLIP BASE
FO	FIBER OPTIC
G	EQUIPMENT GROUNDING CONDUCTOR
GB	GROUND BUS
GFCI	GROUND FAULT CIRCUIT INTERRUPTER
HAR	HIGHWAY ADVISORY RADIO
Hex	HEXAGONAL
HPS	HIGH PRESSURE SODIUM
IISNS	INTERNALLY ILLUMINATED STREET NAME SIGN
ISL	INDUCTION SIGN LIGHTING
LED	LIGHT EMITTING DIODE
LMA	LUMINAIRE MAST ARM
LPS	LOW PRESSURE SODIUM
Ltg	LIGHTING
Lum	LUMINAIRE
M	METERED
MAT	MAST ARM MOUNTING TOP ATTACHMENT
MAS	MAST ARM MOUNTING SIDE ATTACHMENT
M/M	MULTIPLE TO MULTIPLE TRANSFORMER
Mtg	MOUNTING
MV	MERCURY VAPOR LIGHTING FIXTURE
MVDS	MICROWAVE VEHICLE DETECTION SYSTEM
N	NEUTRAL (GROUNDED CONDUCTOR)
NB	NEUTRAL BUS
NC	NORMALLY CLOSE
NO	NORMALLY OPEN
P	CIRCUIT BREAKER'S POLE
PB	PULL BOX
PBA	PUSH BUTTON ASSEMBLY
PEC	PHOTOELECTRIC CONTROL
Ped	PEDESTRIAN
PEU	PHOTOELECTRIC UNIT
PT	CONDUIT WITH PULL TAPE
RE	RELOCATED EQUIPMENT
RM	RAMP METERING
RWIS	ROADSIDE WEATHER INFORMATION SYSTEM
SB	SLIP BASE
SIC	SIGNAL INTERCONNECT CABLE
Sig	SIGNAL
SMA	SIGNAL MAST ARM
SNS	STREET NAME SIGN
SP	SERVICE POINT
TDC	TELEPHONE DEMARCATION CABINET
TMS	TRAFFIC MONITORING STATION
TOS	TRAFFIC OPERATIONS SYSTEM
Veh	VEHICLE
VIVDS	VIDEO IMAGE VEHICLE DETECTION SYSTEM
WIM	WEIGH-IN-MOTION
Xfmr	TRANSFORMER

SOFFIT AND WALL MOUNTED LUMINAIRES

PENDANT, 70 W HPS UNLESS OTHERWISE SPECIFIED

FLUSH, 70 W HPS UNLESS OTHERWISE SPECIFIED

WALL SURFACE, 70 W HPS UNLESS OTHERWISE SPECIFIED

EXISTING SOFFIT OR WALL LUMINAIRE TO REMAIN UNMODIFIED

EXISTING SOFFIT OR WALL LUMINAIRE TO BE MODIFIED AS SPECIFIED

NOTE:
Arrow indicates "street side" of luminaire.

MISCELLANEOUS ELECTROLIERS

NEW	EXISTING	
		LUMINAIRE ON WOOD POLE
		NON-STANDARD ELECTROLIER (SEE PROJECT NOTES OR PROJECT PLANS)
		CITY ELECTROLIER
		ELECTROLIER FOUNDATION (FUTURE INSTALLATION)

STANDARD ELECTROLIER

NEW	EXISTING	STANDARD TYPE
		15
		15D
		15 STRUCTURE
		15D STRUCTURE
		21
		21D
		21 STRUCTURE
		21D STRUCTURE
		30
		31
		32

NOTES:

1. HPS luminaires shall be 310 W HPS when installed on Type 21, 21D, 30, 31 and 32 Standards, unless otherwise specified. HPS luminaires shall be 200 W when installed on other type standards or poles, unless otherwise specified.
2. LED luminaires shall be 235 W when installed on Type 21, 21D, 30, 31 and 32 Standards, unless otherwise specified. LED luminaires shall be 165 W when installed on other type standards or poles, unless otherwise specified.
3. Luminaires shall be the cutoff type, ANSI Type III medium cutoff lighting distribution, unless otherwise specified.

COMMONLY USED SYMBOLS FOR UNITED STATES CUSTOMARY UNITS OF MEASUREMENT:

SYMBOL USED	DEFINITIONS
Ω	OHMS
min	MINUTE
s	SECOND
bps	BITS PER SECOND
Bps	BYTES PER SECOND
A	AMPERE
V	VOLT
V(dc)	VOLT (DIRECT CURRENT)
V(ac)	VOLT (ALTERNATING CURRENT)
FC	FOOT - CANDLE
W	WATTS
VA	VOLT-AMPERE
M	MEGA
k	KILO
m	MILLI
μ	MICRO
P	PICO
Hz	HERTZ

STATE OF CALIFORNIA
DEPARTMENT OF TRANSPORTATION

ELECTRICAL SYSTEMS (LEGEND AND ABBREVIATIONS)

NO SCALE

RSP ES-1A DATED JULY 19, 2013 SUPERSEDES STANDARD PLAN ES-1A DATED MAY 20, 2011 - PAGE 425 OF THE STANDARD PLANS BOOK DATED 2010.

REVISED STANDARD PLAN RSP ES-1A

2010 REVISED STANDARD PLAN RSP ES-1A

P:\PROJ\01\08300\drafting\01_08300\vd006.dgn

7-15-13

Dist	COUNTY	ROUTE	POST MILES TOTAL PROJECT	SHEET No.	TOTAL SHEETS
01	DN	101	21.9	22	55

Theresa Gabriel
REGISTERED ELECTRICAL ENGINEER

July 19, 2013
PLANS APPROVAL DATE

REGISTERED PROFESSIONAL ENGINEER Theresa Aziz Gabriel No. E15129 Exp. 6-30-14 ELECTRICAL STATE OF CALIFORNIA

THE STATE OF CALIFORNIA OR ITS OFFICERS OR AGENTS SHALL NOT BE RESPONSIBLE FOR THE ACCURACY OR COMPLETENESS OF SCANNED COPIES OF THIS PLAN SHEET.

TO ACCOMPANY PLANS DATED 5-01-15

CONDUIT

NEW	EXISTING	
		LIGHTING CONDUIT, UNLESS OTHERWISE INDICATED OR NOTED
		TRAFFIC SIGNAL CONDUIT
C	c	COMMUNICATION CONDUIT
T	t	TELEPHONE CONDUIT
F	f	FIRE ALARM CONDUIT
FO	fo	FIBER OPTIC CONDUIT
		CONDUIT TERMINATION
R	r	CONDUIT RISER ATTACHED TO THE STRUCTURE OR SERVICE POLE

SERVICE EQUIPMENT

NEW	EXISTING	
OH	oh	OVERHEAD LINES
U	U	WOOD POLE, "U" INDICATES UTILITY OWNED
		POLE GUY WITH ANCHOR
		UTILITY TRANSFORMER - GROUND MOUNTED
III	III	SERVICE EQUIPMENT ENCLOSURE TYPE. DOOR INDICATES FRONT OF ENCLOSURE
T	t	TELEPHONE DEMARCATION CABINET

POLE-MOUNTED SERVICE DESIGNATION

TYPE H SERVICE, 28'-10" — TYPE OF INSTALLATION AND POLE HEIGHT ABOVE GRADE

FLASHING BEACON

NEW	EXISTING	
R	R	FLASHING BEACON (ONE VEHICLE SIGNAL HEAD WITH BACKPLATE AND VISOR) "R" INDICATES RED INDICATION, "Y" INDICATES YELLOW INDICATION
Y Y	Y Y	FLASHING BEACON WITH TYPE 15-FBS STANDARD AND A SIGN.
R R	R R	FLASHING BEACON WITH TYPES 9, 9A OR 9B SIGN UNLESS OTHERWISE SPECIFIED OR INDICATED

SIGNAL EQUIPMENT

NEW	EXISTING	
C	C	PEDESTRIAN SIGNAL HEAD "C" INDICATES COUNTDOWN PEDESTRIAN HEAD
		PUSH BUTTON ASSEMBLY POST
		PEDESTRIAN BARRICADE
		VEHICLE SIGNAL HEAD (WITH BACKPLATE AND 3-SECTIONS: RED, YELLOW AND GREEN)
		VEHICLE SIGNAL HEAD WITH ANGLE VISOR
PV	PV	MODIFICATIONS OF BASIC SYMBOL: "L" INDICATES ALL NON-ARROW SECTIONS LOUVERED "LG" INDICATES LOUVERED GREEN SECTION ONLY "PV" INDICATES ALL 12" SECTIONS PROGRAMMED VISIBILITY "8" INDICATES ALL 8" SECTIONS (ONLY WHEN SPECIFIED)
		VEHICLE SIGNAL HEAD CONSISTING OF RED, YELLOW AND GREEN LEFT ARROW SECTIONS
		VEHICLE SIGNAL HEAD CONSISTING OF RED AND YELLOW SECTIONS WITH AN UP GREEN ARROW SECTION
		VEHICLE SIGNAL HEAD (5 SECTION) CONSISTING OF RED, YELLOW AND GREEN SECTIONS WITH YELLOW AND GREEN RIGHT ARROW SECTIONS
		TYPE 15TS STANDARD WITH VEHICLE SIGNAL HEAD AND LUMINAIRE
		TYPE 21TS STANDARD WITH VEHICLE SIGNAL HEAD AND LUMINAIRE
		STANDARD WITH LUMINAIRE AND SIGNAL MAST ARMS AND ATTACHED VEHICLE SIGNAL HEADS
		TYPE 1 STANDARD WITH ATTACHED VEHICLE SIGNAL HEADS
		STANDARD WITH A SIGNAL MAST ARM, ATTACHED VEHICLE SIGNAL HEADS AND INTERNALLY ILLUMINATED STREET NAME SIGN
		CONTROLLER ASSEMBLY. DOOR INDICATES FRONT OF CABINET

SIGNAL EQUIPMENT Cont

NEW	EXISTING	
		GUARD POST
		TYPE 1 STANDARD WITH RAMP METERING SIGN
		OPTICAL DETECTOR FOR THE EMERGENCY VEHICLE DETECTION SYSTEM

NOTES:

1. All signal sections shall be 12" unless shown otherwise.
2. Signal heads shall be provided with backplates unless shown otherwise.

ILLUMINATED OVERHEAD SIGN

NEW	EXISTING	
		SINGLE POST, SINGLE ILLUMINATED SIGN, BALANCED BUTTERFLY
		SINGLE POST, DOUBLE ILLUMINATED SIGN, BALANCED BUTTERFLY
		SINGLE POST, SINGLE ILLUMINATED SIGN, FULL CANTILEVER
		DOUBLE POST, SINGLE ILLUMINATED SIGN
		SINGLE ILLUMINATED SIGN MOUNTED ON STRUCTURE
		DOUBLE POST, SINGLE ILLUMINATED SIGN WITH ELECTROLIER

STATE OF CALIFORNIA
DEPARTMENT OF TRANSPORTATION

ELECTRICAL SYSTEMS (LEGEND AND ABBREVIATIONS)

NO SCALE

RSP ES-1B DATED JULY 19, 2013 SUPERSEDES STANDARD PLAN ES-1B DATED MAY 20, 2011 - PAGE 426 OF THE STANDARD PLANS BOOK DATED 2010.

REVISED STANDARD PLAN RSP ES-1B

2010 REVISED STANDARD PLAN RSP ES-1B

P:\PROJ\01\08300\drafting\01_08300\vd007.dgn

7-15-13

Dist	COUNTY	ROUTE	POST MILES TOTAL PROJECT	SHEET No.	TOTAL SHEETS
01	DN	101	21.9	23	55

Theresa Gabriel
REGISTERED ELECTRICAL ENGINEER

July 19, 2013
PLANS APPROVAL DATE

REGISTERED PROFESSIONAL ENGINEER Theresa Aziz Gabriel No. E15129 Exp. 6-30-14 ELECTRICAL STATE OF CALIFORNIA

THE STATE OF CALIFORNIA OR ITS OFFICERS OR AGENTS SHALL NOT BE RESPONSIBLE FOR THE ACCURACY OR COMPLETENESS OF SCANNED COPIES OF THIS PLAN SHEET.

TO ACCOMPANY PLANS DATED 5-01-15

EQUIPMENT IDENTIFICATION

ILLUMINATED SIGN IDENTIFICATION NUMBER:

SIGN No. 12345

10 ISL SCI 1.0

- SIGN NUMBER - PLACE ON POST OR STRUCTURE
- TRANSFORMER RATING (kVA)
- LIGHTING CONTROL TYPE
- NUMBER AND TYPE OF FIXTURES

DO NOT PLACE ON STANDARD OR STRUCTURE

ELECTROLIER OR EQUIPMENT IDENTIFICATION NUMBER:

12345 - 15'-0"

- MAST ARM LENGTH, IF SHOWN. DO NOT PLACE ON STANDARD OR STRUCTURE
- EQUIPMENT NUMBER - PLACE ON STANDARD OR STRUCTURE. EXISTING EQUIPMENT NUMBERS ARE SHOWN IN PARENTHESIS

CONDUIT AND CONDUCTOR IDENTIFICATION:

1½"C, 2#10, 15#14, 2 DLC, 12P#18 (PAIR)

- NUMBER AND SIZE OF CONDUCTORS AND CABLES
- SIZE OF CONDUIT IN INCHES

ø1, ø2, ø2P, etc.	TRAFFIC PHASE IDENTIFICATION FOR SIGNAL FACES, DETECTORS AND PHASE DIAGRAMS
1 2 3	LEGEND NUMBERS
A B C	EQUIPMENT, SIGNAL POLES, INSTALLATION OR ITEMS
1 2 3	CONDUIT RUN NUMBERS

SIGNAL AND LIGHTING STANDARD (TYPICAL DESIGNATION):

19A - 3 - 100

- WIND VELOCITY = 100 mph
- CASE 3 ARM LOADING
- STANDARD TYPE
- STANDARD PLAN SHEET NUMBER
- DETAIL, NUMBER, SECTION, TYPE OR ELEVATION

MISCELLANEOUS EQUIPMENT

NEW	EXISTING	
CMS	cms	CHANGEABLE MESSAGE SIGN
		CLOSED CIRCUIT TELEVISION CAMERA
		HIGHWAY ADVISORY RADIO POLE AND ANTENNA
EMS	ems	EXTINGUISHABLE MESSAGE SIGN
M V	m v	DETECTION DEVICE M = MICROWAVE SENSOR V = VIDEO IMAGE SENSOR

WIRING DIAGRAM LEGEND

----	EXTERNAL CONDUCTOR
	CONDUCTOR OR BUS
	TIE POINT
	CONTACTOR COIL
	CONTACTOR, NO CONTACT
	TERMINAL BLOCKS
	CONTACTOR, NC CONTACT
	ENCLOSURE BOND
	GROUNDING ELECTRODE
	CIRCUIT BREAKER
	RECEPTACLE

PULL BOXES

NEW	EXISTING	
		PULL BOX, No. 5 UNLESS OTHERWISE INDICATED OR NOTED
3	9A(21)	PULL BOX, ADDITIONAL DESIGNATIONS OR DESCRIPTIONS

3 No. 3½ PULL BOX
5 No. 5 PULL BOX
6 No. 6 PULL BOX
7 No. 7 (CEILING PULL BOX)
8 No. 8 (PENDANT SOFFIT PULL BOX)
9 No. 9 PULL BOX
9A No. 9A PULL BOX

(C) COMMUNICATIONS PULL BOX
(E) PULL BOX WITH EXTENSION
(S) SPRINKLER CONTROL PULL BOX
(21) ANCHOR BOLTS AND CONDUIT FOR FUTURE INSTALLATION OF TYPE 21 STANDARD
(T) TRAFFIC PULL BOX

VEHICLE DETECTORS

5 J 9 U

- VEHICLE DETECTOR DESIGNATION
- U = UPPER
  L = LOWER
- SLOT NUMBER IN INPUT FILE
- INPUT FILE (I OR J)
- PHASE

NEW	EXISTING	
		TYPE A DETECTOR LOOP. OUTLINE OF SAWCUT SHOWN
		TYPE B DETECTOR LOOP. OUTLINE OF SAWCUT SHOWN
		TYPE C DETECTOR LOOP. OUTLINE OF SAWCUT SHOWN
		TYPE D DETECTOR LOOP. OUTLINE OF SAWCUT SHOWN
		TYPE E DETECTOR LOOP. OUTLINE OF SAWCUT SHOWN
		TYPE Q DETECTOR LOOP. OUTLINE OF SAWCUT SHOWN
		MAGNETIC DETECTOR
DH	dh	DETECTOR HANDHOLE
		MICROWAVE OR VIDEO DETECTION ZONE

STATE OF CALIFORNIA
DEPARTMENT OF TRANSPORTATION

ELECTRICAL SYSTEMS (LEGEND AND ABBREVIATIONS)

NO SCALE

RSP ES-1C DATED JULY 19, 2013 SUPERSEDES STANDARD PLAN ES-1C DATED MAY 20, 2011 - PAGE 427 OF THE STANDARD PLANS BOOK DATED 2010.

REVISED STANDARD PLAN RSP ES-1C

2010 REVISED STANDARD PLAN RSP ES-1C

P:\PROJ\01\0B300\drafting\01_0B300\va0008.dgn

7-11-13

Dist	COUNTY	ROUTE	POST MILES TOTAL PROJECT	SHEET No.	TOTAL SHEETS
01	DN	101	21.9	24	55

Theresa Gabriel
REGISTERED ELECTRICAL ENGINEER

July 19, 2013
PLANS APPROVAL DATE

REGISTERED PROFESSIONAL ENGINEER
Theresa Aziz Gabriel
No. E15129
Exp. 6-30-14
ELECTRICAL
STATE OF CALIFORNIA

THE STATE OF CALIFORNIA OR ITS OFFICERS OR AGENTS SHALL NOT BE RESPONSIBLE FOR THE ACCURACY OR COMPLETENESS OF SCANNED COPIES OF THIS PLAN SHEET.

TO ACCOMPANY PLANS DATED 5-01-15

VISORS

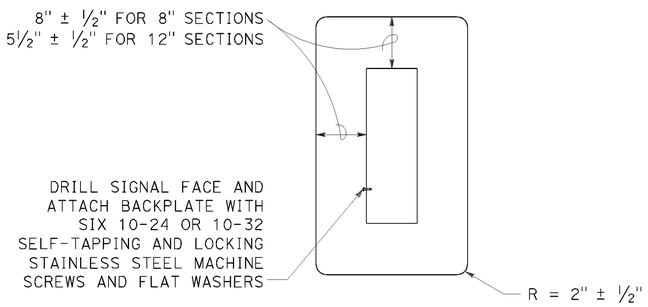

8" AND 12" SECTIONS

BACKPLATE

1/16" minimum thickness
3001-14 aluminum or plastic
when specified

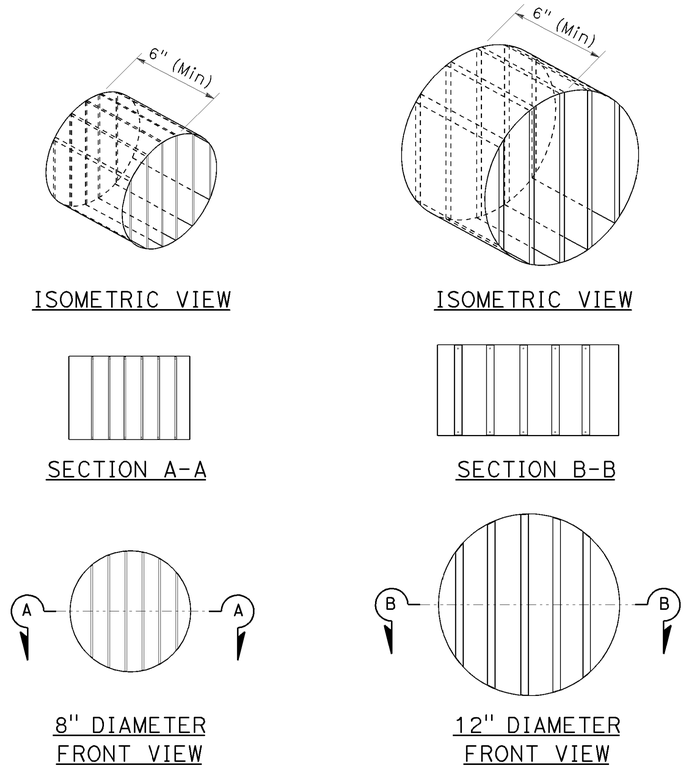

ISOMETRIC VIEW — ISOMETRIC VIEW

SECTION A-A — SECTION B-B

8" DIAMETER FRONT VIEW — 12" DIAMETER FRONT VIEW

DIRECTIONAL LOUVER

Directional louvers shall be oriented as directed by the Engineer and secured in place with one plated brass machine screw and nut.

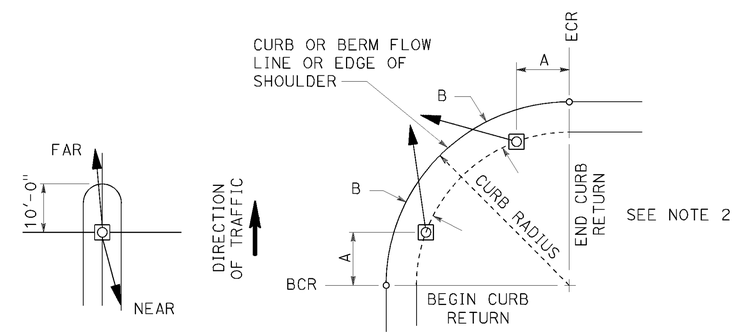

NOTES:

1. Typical signal pole placement unless dimensioned on plans.
2. For A and B dimensions, see Pole Schedule, or as directed by the Engineer.

SIGNAL STANDARD PLACEMENT DIMENSIONS AND EQUIPMENT LOCATIONS

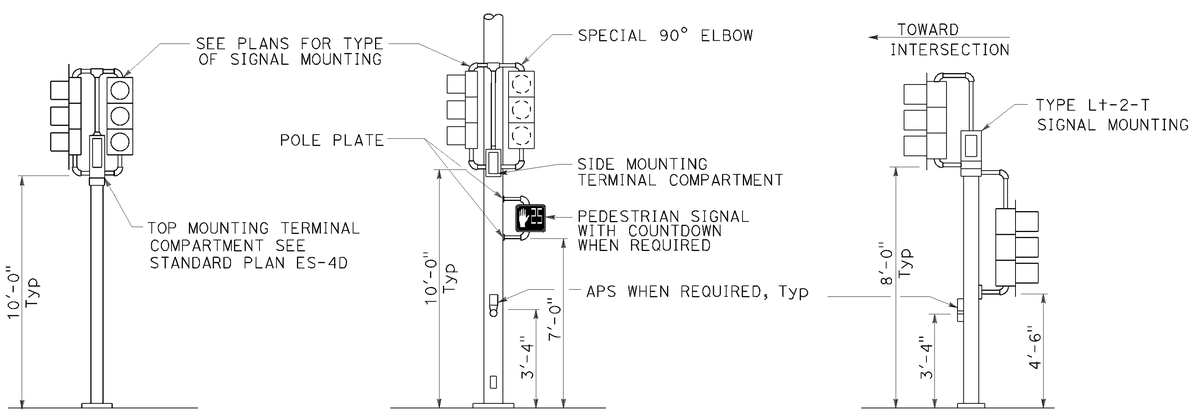

TOP MOUNTED SIGNALS (TV)
Type 1-A, 1-B, 1-C and 1-D standard as indicated on the plans

SIDE MOUNTED SIGNALS (SV AND SP)
Normally used on standards with luminaire or signal mast arm

LEFT TURN LANE SIGNAL
Type 1-A, 1-B, 1-C and 1-D standard as indicated on plans

TYPICAL SIGNAL INSTALLATIONS

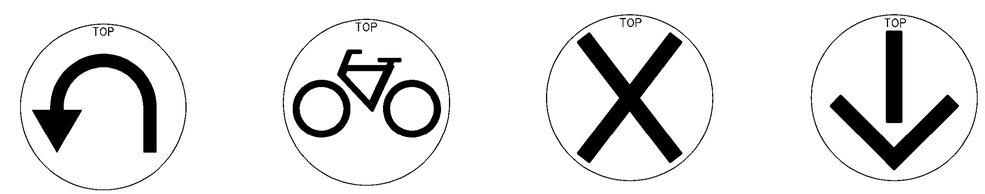

U-TURN — BICYCLE — LANE CONTROL — LANE CONTROL

SIGNAL FACES

STATE OF CALIFORNIA
DEPARTMENT OF TRANSPORTATION

ELECTRICAL SYSTEMS (VEHICULAR SIGNAL HEADS AND MOUNTINGS)

NO SCALE

RSP ES-4C DATED JULY 19, 2013 SUPERSEDES STANDARD PLAN ES-04C DATED MAY 20, 2011 - PAGE 445 OF THE STANDARD PLANS BOOK DATED 2010.

REVISED STANDARD PLAN RSP ES-4C

2010 REVISED STANDARD PLAN RSP ES-4C

P:\PROJ\01\08300\drafting\01_08300\va009.dgn

7-10-13

Dist	COUNTY	ROUTE	POST MILES TOTAL PROJECT	SHEET No.	TOTAL SHEETS
01	DN	101	21.9	25	55

Theresa Gabriel
REGISTERED ELECTRICAL ENGINEER

July 19, 2013
PLANS APPROVAL DATE

REGISTERED PROFESSIONAL ENGINEER Theresa Aziz Gabriel No. E15129 Exp. 6-30-14 ELECTRICAL STATE OF CALIFORNIA

THE STATE OF CALIFORNIA OR ITS OFFICERS OR AGENTS SHALL NOT BE RESPONSIBLE FOR THE ACCURACY OR COMPLETENESS OF SCANNED COPIES OF THIS PLAN SHEET.

TO ACCOMPANY PLANS DATED 5-01-15

2010 REVISED STANDARD PLAN RSP ES-5B

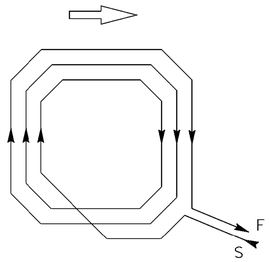

WINDING DETAIL

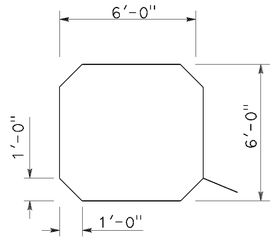

SAWCUT DETAIL

TYPE A LOOP DETECTOR CONFIGURATION

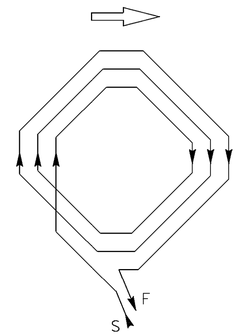

WINDING DETAIL

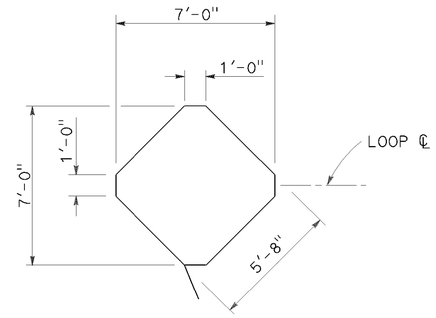

SAWCUT DETAIL

TYPE B LOOP DETECTOR CONFIGURATION

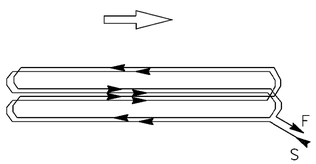

WINDING DETAIL

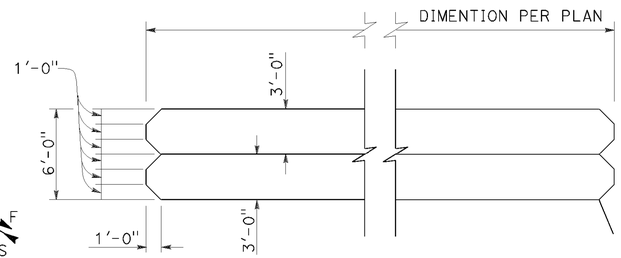

SAWCUT DETAIL

TYPE C LOOP DETECTOR CONFIGURATION

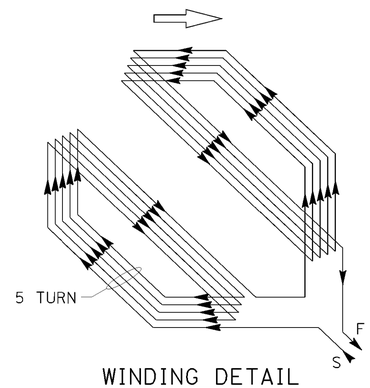

WINDING DETAIL

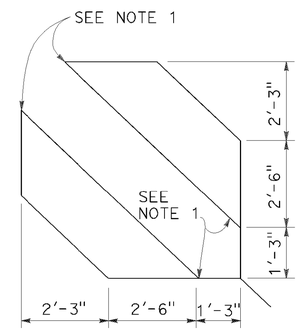

SAWCUT DETAIL

TYPE D LOOP DETECTOR CONFIGURATION

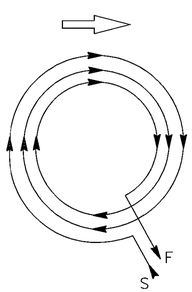

WINDING DETAIL

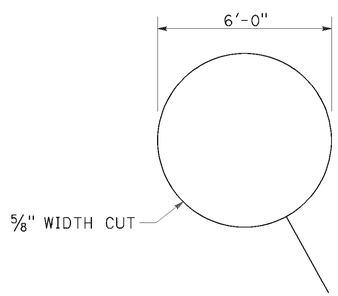

SAWCUT DETAIL

TYPE E LOOP DETECTOR CONFIGURATION

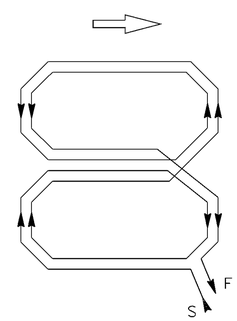

WINDING DETAIL

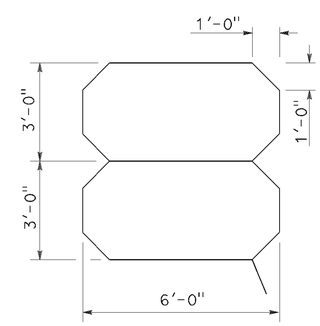

SAWCUT DETAIL

TYPE Q LOOP DETECTOR CONFIGURATION

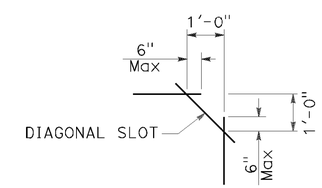

PLAN VIEW OF DIAGONAL SLOT AT CORNERS

NOTES:

1. Round corners of acute angle sawcuts to prevent damage to conductors.
2. Typical distance separating loops from edge to edge is 10' for Type A, B, D and E installation in single lane.

STATE OF CALIFORNIA
DEPARTMENT OF TRANSPORTATION

ELECTRICAL SYSTEMS (DETECTORS)

NO SCALE

RSP ES-5B DATED JULY 19, 2013 SUPERSEDES STANDARD PLAN ES-5B DATED MAY 20, 2011 - PAGE 449 OF THE STANDARD PLANS BOOK DATED 2010.

REVISED STANDARD PLAN RSP ES-5B

P:\PROJ\01\0B300\drafting\01_0B300\va010.dgn

7-9-13

Dist	COUNTY	ROUTE	POST MILES TOTAL PROJECT	SHEET No.	TOTAL SHEETS
01	DN	101	21.9	26	55

Theresa Gabriel
REGISTERED ELECTRICAL ENGINEER

July 19, 2013
PLANS APPROVAL DATE

REGISTERED PROFESSIONAL ENGINEER Theresa Aziz Gabriel No. E15129 Exp. 6-30-14 ELECTRICAL STATE OF CALIFORNIA

THE STATE OF CALIFORNIA OR ITS OFFICERS OR AGENTS SHALL NOT BE RESPONSIBLE FOR THE ACCURACY OR COMPLETENESS OF SCANNED COPIES OF THIS PLAN SHEET.

TO ACCOMPANY PLANS DATED 5-01-15

2010 REVISED STANDARD PLAN RSP ES-5D

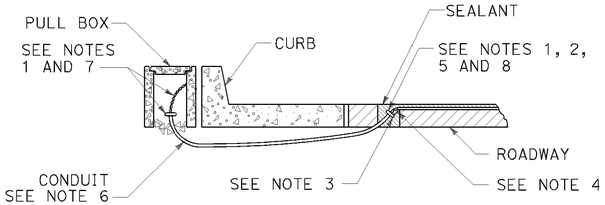

TYPE A
CURB TERMINATION DETAIL

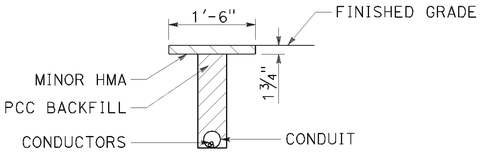

"T" TRENCH
DETAIL T

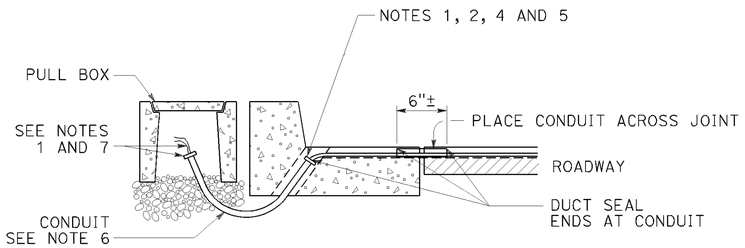

CROSS SECTION

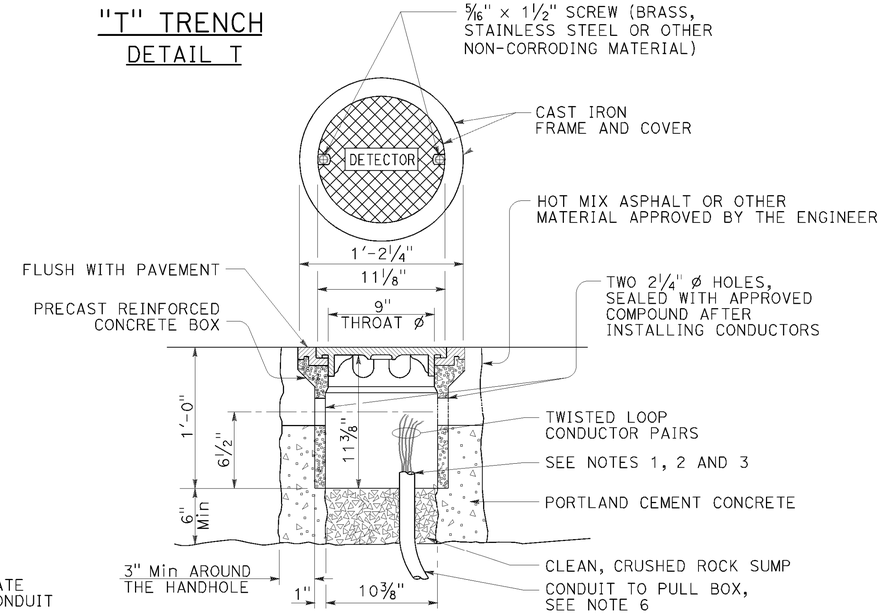

DETECTOR HANDHOLE DETAIL

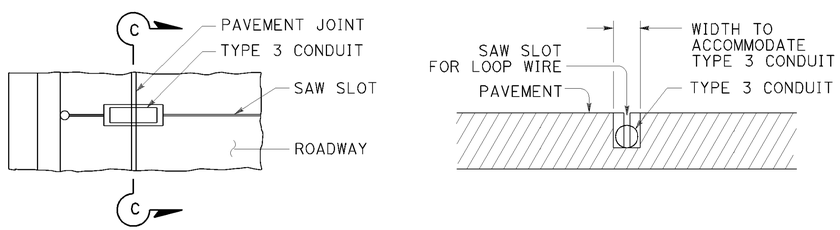

PLAN VIEW

SECTION C-C

TYPE B
CURB TERMINATION DETAIL

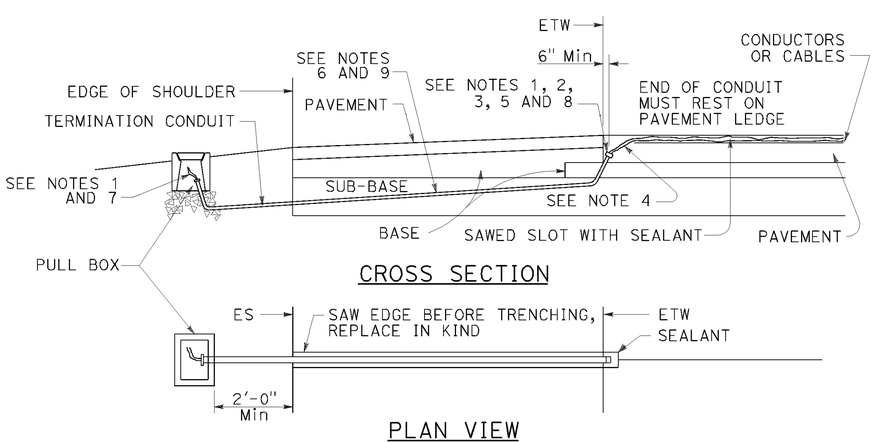

CROSS SECTION

PLAN VIEW

SHOULDER TERMINATION DETAILS

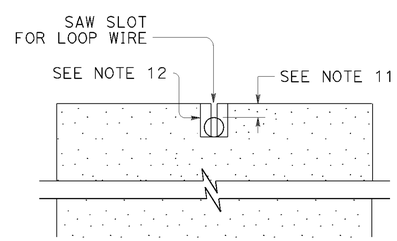

SECTION A-A

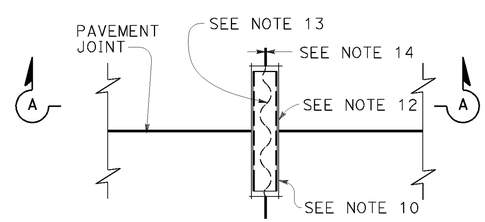

PLAN VIEW

TYPICAL LOOP LEAD-IN DETAIL
AT PAVEMENT JOINT

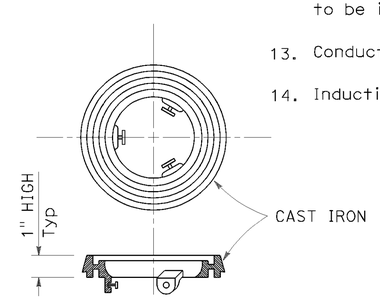

LOCKING GRADE RING

NOTES:

1. Bushing shall be used at end of conduit.
2. Tape detector conductors or cables 3" each side of bushings.
3. Install duct seal compound to each end of termination conduit before installing sealant.
4. Round all sharp edges where detector conductors or cables have to pass.
5. End of conduit shall be 3⅛" below roadway surface.
6.

Conduit size	Loop conductors
1"C minimum	1 to 2 pairs
1½"C minimum	3 to 4 pairs
2"C minimum	5 or more pairs

7. Splice detector conductors or cables to detector lead-in-cable.
8. Location of detector handhole when shown on plans.
9. When the shoulder and traveled way are paved with the same material and there is no joint between them, the conduit shall extend only 2'-0" into the shoulder pavement.
10. ¾"C, Type 3 conduit 6" long minimum, plug both ends with duct compound to keep out sealant.
11. ½" Minimum between top of conduit and pavement surface.
12. Sawcut shall not exceed 1" in width and ⅛" longer than conduit to be installed.
13. Conductors with ½" minimum slack inside conduit.
14. Inductive loop detector saw slot.

STATE OF CALIFORNIA
DEPARTMENT OF TRANSPORTATION

ELECTRICAL SYSTEMS (CURB TERMINATION AND HANDHOLE)

NO SCALE

RSP ES-5D DATED JULY 19, 2013 SUPERSEDES STANDARD PLAN ES-5D
DATED MAY 20, 2011 - PAGE 451 OF THE STANDARD PLANS BOOK DATED 2010.

REVISED STANDARD PLAN RSP ES-5D

P:\PROJ\01\0B300\drafting\01_0B300\va011.dgn

7-9-13

DIST	COUNTY	ROUTE	POST MILES TOTAL PROJECT	SHEET NO.	TOTAL SHEETS
01	DN	101	21.9	27	55

Theresa Gabriel
REGISTERED ELECTRICAL ENGINEER

July 19, 2013
PLANS APPROVAL DATE

REGISTERED PROFESSIONAL ENGINEER Theresa Aziz Gabriel No. E15129 Exp. 6-30-14 ELECTRICAL STATE OF CALIFORNIA

THE STATE OF CALIFORNIA OR ITS OFFICERS OR AGENTS SHALL NOT BE RESPONSIBLE FOR THE ACCURACY OR COMPLETENESS OF SCANNED COPIES OF THIS PLAN SHEET.

TO ACCOMPANY PLANS DATED 5-01-15

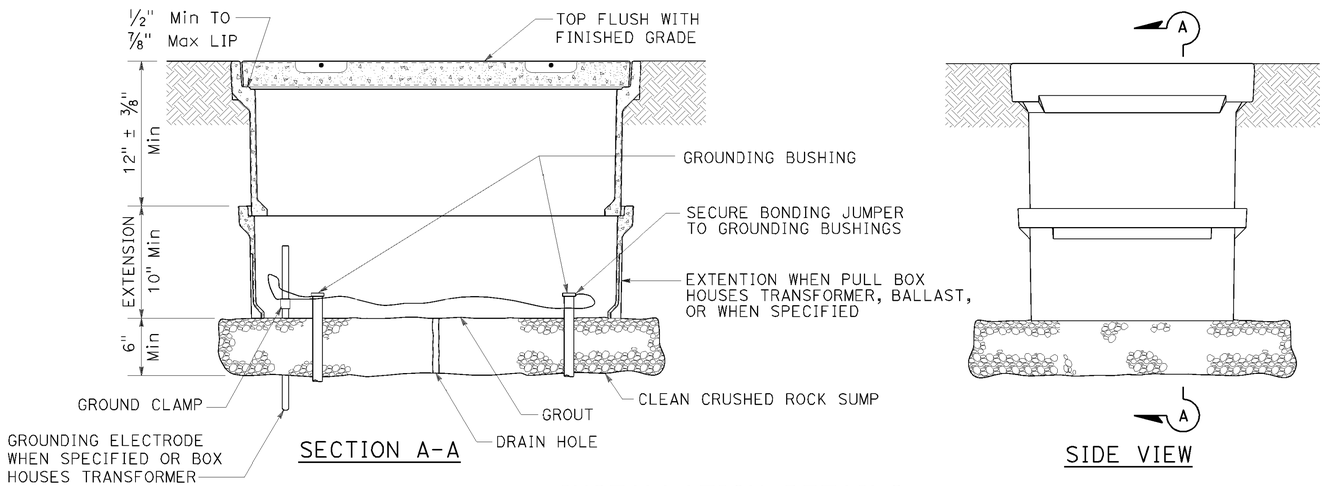

SECTION A-A

SIDE VIEW

INSTALLATION DETAILS

DETAIL A

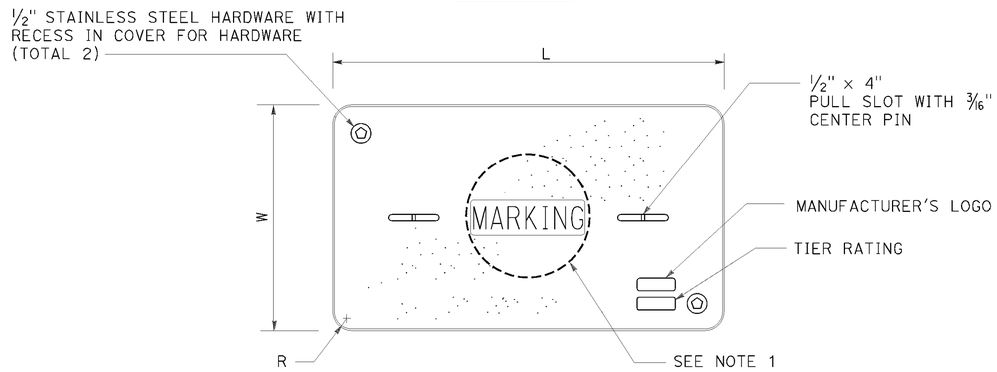

COVER TOP VIEW

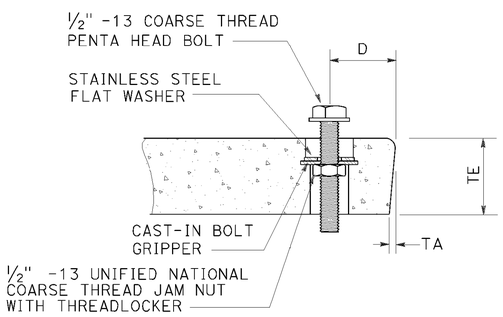

TYPICAL COVER CAPTIVE BOLT

OR SIMILAR

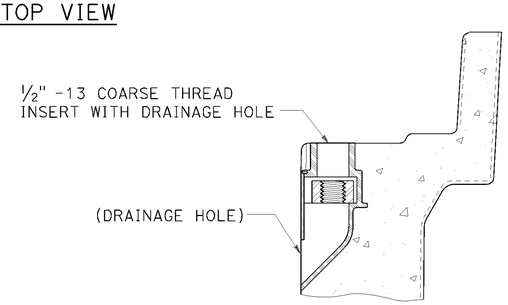

TYPICAL THREADED INSERT

OR SIMILAR

DIMENSION TABLE

PULL BOX	PULL BOX			COVER						
	MINIMUM DEPTH BOX	MINIMUM DEPTH EXTENSION	MAXIMUM WEIGHT	L	W	R	TE	TA	D	MAXIMUM WEIGHT
No. 3½	12"	N/A	40 lb	1′ - 3⅜"	10⅛"	1⅜"	2"	⅛"	1¾"	30 lb
No. 5	12"	10"	55 lb	1′ - 11¼"	1′ - 1¾"	1⅜"	2"	⅛"	1¾"	60 lb
No. 6	12"	10"	70 lb	2′ - 6½"	1′ - 5½"	1⅜"	2"	⅛"	2"	85 lb

NOTES:

1. Pull box covers shall be marked as follows: "SERVICE" Service circuits between service point and service disconnect; "SPRINKLER-CONTROL" sprinkler control circuits, 50 V or less; "CALTRANS" on all pull boxes, except pull boxes marked "SPRINKLER-CONTROL"; and "TELEPHONE" Telephone service;
   - A) No. 3½ pull box.
     - 1) "SIGNAL" - Traffic signal circuits with or without lighting or sign lighting circuits.
     - 2) "LIGHTING" - Lighting or sign lighting circuits where voltage is under 600 V.
   - B) No. 5, 6, 9 or 9A pull box.
     - 1) "TRAFFIC SIGNAL" - Traffic signal circuits with or without lighting or sign lighting circuits.
     - 2) "LIGHTING" - Lighting or sign lighting circuits where voltage is under 600 V.
     - 3) "LIGHTING-HIGH VOLTAGE" - Lighting or sign lighting circuits where voltage is above 600 V.
     - 4) "IRRIGATION" - Circuits to irrigation controller 120 V or more.
     - 5) "RAMP METER" - Ramp meter circuits.
     - 6) "COUNT STATION" - Count or speed monitor circuits.
     - 7) "COMMUNICATIONS" - Communication circuits.
     - 8) "TOS COMMUNICATIONS" - TOS communication line.
     - 9) "TOS POWER" - TOS power.
     - 10) "TDC POWER" - Telephone demarcation cabinet power.
     - 11) "CCTV" - Closed circuit television circuits.
     - 12) "TMS" - Traffic monitoring station circuits.
     - 13) "CMS" - Changeable message sign circuits.
     - 14) "HAR" - Highway advisory radio circuits.
     - 15) "BOOSTER PUMP" - Booster pump circuit.
2. The nominal dimensions of the opening in which the cover sets shall be the same as the cover dimensions except the length and width dimensions shall be ⅛" greater.
3. Covers and boxes shall be interchangeable with California standard male and female gages. When interchanged with a standard male or female gage, the top surfaces shall be flush within ⅛". Top outside radius of covers and pull boxes shall have a ⅛" radius.
4. Pull box extension may be another pull box as long as the bottom edge of the pull box can fit into the cover opening.
5. All dimensions for the cover for non-traffic pull box are nominal values.

STATE OF CALIFORNIA
DEPARTMENT OF TRANSPORTATION

ELECTRICAL SYSTEMS (NON-TRAFFIC PULL BOX)

NO SCALE

RSP ES-8A DATED JULY 19, 2013 SUPERSEDES RSP ES-8A DATED JANUARY 20, 2012 THAT SUPPLEMENTS THE STANDARD PLANS BOOK DATED 2010.

REVISED STANDARD PLAN RSP ES-8A

2010 REVISED STANDARD PLAN RSP ES-8A

P:\PROJ\01\08300\drafting\01_08300\va012.dgn

7-15-13

DIST	COUNTY	ROUTE	POST MILES TOTAL PROJECT	SHEET NO.	TOTAL SHEETS
01	DN	101	21.9	28	55

Theresa Gabriel
REGISTERED ELECTRICAL ENGINEER

July 19, 2013
PLANS APPROVAL DATE

REGISTERED PROFESSIONAL ENGINEER
Theresa Aziz Gabriel
No. E15129
Exp. 6-30-14
ELECTRICAL
STATE OF CALIFORNIA

THE STATE OF CALIFORNIA OR ITS OFFICERS OR AGENTS SHALL NOT BE RESPONSIBLE FOR THE ACCURACY OR COMPLETENESS OF SCANNED COPIES OF THIS PLAN SHEET.

TO ACCOMPANY PLANS DATED 5-01-15

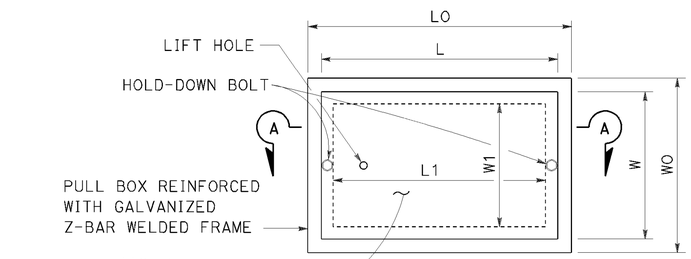

TOP VIEW

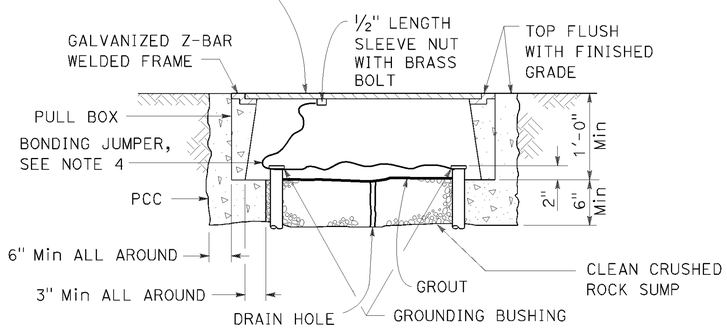

SECTION A-A

No. 3½(T), No. 5(T) AND No. 6(T) TRAFFIC PULL BOX

NOTES:

1. Traffic pull box shall be provided with steel cover and special concrete footing. Steel cover shall have embossed non-skid pattern.
2. Steel reinforcing shall be as regularly used in the standard products of the respective manufacturer.
3. Pull box covers shall be marked as follows: "SERVICE" Service circuits between service point and service disconnect; "SPRINKLER-CONTROL" Sprinkler control circuits, 50 V or less; "CALTRANS" On all pull boxes, except pull boxes marked "SPRINKLER-CONTROL"; and "TELEPHONE" Telephone service.
   A) No. 3½(T) pull box.
      1) "SIGNAL" - Traffic signal circuits with or without lighting or sign lighting circuits.
      2) "LIGHTING" - Lighting or sign lighting circuits where voltage is under 600 V.
   B) No. 5(T) or 6(T) pull box.
      1) "TRAFFIC SIGNAL" - Traffic signal circuits with or without lighting or sign lighting circuits.
      2) "LIGHTING" - Lighting or sign lighting circuits where voltage is under 600 V.
      3) "LIGHTING-HIGH VOLTAGE" - Lighting or sign lighting circuits where voltage is above 600 V.
      4) "IRRIGATION" - Circuits to irrigation controller 120 V or more.
      5) "RAMP METER" - Ramp meter circuits.
      6) "COUNT STATION" - Count or speed monitor circuits.
      7) "COMMUNICATION" - Communication circuits.
      8) "TOS COMMUNICATIONS" - TOS communications line.
      9) "TOS POWER" - TOS power.
      10) "TDC POWER" - Telephone demarcation cabinet power.
      11) "CCTV" - Closed circuit television circuits.
      12) "TMS" - Traffic monitoring station circuits.
      13) "CMS" - Changeable message sign circuits.
      14) "HAR" - Highway advisory radio circuits.
      15) "BOOSTER PUMP" - Booster pump circuit.
4. Bonding jumper for metal covers shall be 3' long, minimum.
5. The nominal dimensions of the opening in which the cover sets shall be the same as the cover dimensions except the length and width dimensions shall be ⅛" greater.
6. Covers and boxes shall be interchangeable with California standard male and female gages. When interchanged with a standard male or female gage, the top surfaces shall be flush within ⅛".

DIMENSION TABLE

PULL BOX	PULL BOX						COVER				
	MINIMUM * THICKNESS	MINIMUM DEPTH BOX AND EXTENSION	WO	LO	L1	W1	L **	W **	R	EDGE THICKNESS	EDGE TAPER
No. 3½(T)	1½"	1'-0"	1'-5"± 1"	1'-8⅞"±	1'-2½"±	10⅝"± 1"	1'-8"±	1'-1¾"±	0"	½"	NONE
No. 5(T)	1¾"	1'-0"	1'-11½"± 1"	2'-5½"±	1'-7"±	1'-1"± 1"	2'-3"±	1'-4"±	0"	½"	NONE
No. 6(T)	2"	1'-0"	2'-6"± 1"	2'-11½"±	1'-11½"±	1'-5"± 1"	2'-9"±	1'-8"±	0"	½"	NONE

* EXCLUDING CONDUIT WEB ** TOP DIMENSION

STATE OF CALIFORNIA
DEPARTMENT OF TRANSPORTATION

ELECTRICAL SYSTEMS (TRAFFIC PULL BOX)

NO SCALE

RSP ES-8B DATED JULY 19, 2013 SUPERSEDES RSP ES-8B DATED JANUARY 20, 2012 THAT SUPPLEMENTS THE STANDARD PLANS BOOK DATED 2010.

REVISED STANDARD PLAN RSP ES-8B

2010 REVISED STANDARD PLAN RSP ES-8B

P:\PROJ\01\0B300\drafting\01_0B300\va013.dgn

7-15-13

Dist	COUNTY	ROUTE	POST MILES TOTAL PROJECT	SHEET No.	TOTAL SHEETS
01	DN	101	21.9	29	55

Theresa Gabriel
REGISTERED ELECTRICAL ENGINEER

July 19, 2013
PLANS APPROVAL DATE

REGISTERED PROFESSIONAL ENGINEER
Theresa Aziz Gabriel
No. E15129
Exp. 6-30-14
ELECTRICAL
STATE OF CALIFORNIA

THE STATE OF CALIFORNIA OR ITS OFFICERS OR AGENTS SHALL NOT BE RESPONSIBLE FOR THE ACCURACY OR COMPLETENESS OF SCANNED COPIES OF THIS PLAN SHEET.

TO ACCOMPANY PLANS DATED 5-01-15

ISOFOOTCANDLE CURVE - MINIMUM

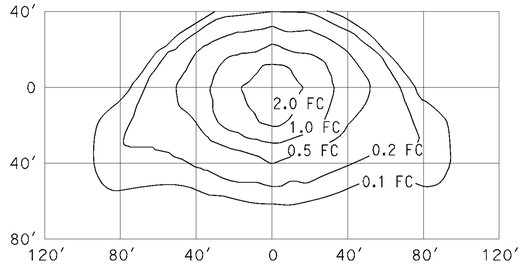

TYPE III MEDIUM CUTOFF

Cutoff Luminaire
34′ Mounting Height
Lamp operated at 22,000 lm
200-W high pressure sodium lamp
ANSI Designation S66

ISOFOOTCANDLE CURVE - MINIMUM

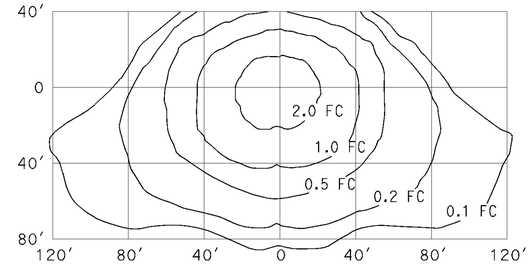

TYPE III MEDIUM CUTOFF

Cutoff Luminaire
40′ Mounting Height
Lamp operated at 37,000 lm
310-W high pressure sodium lamp
ANSI Designation S67

ISOFOOTCANDLE CURVE - MINIMUM

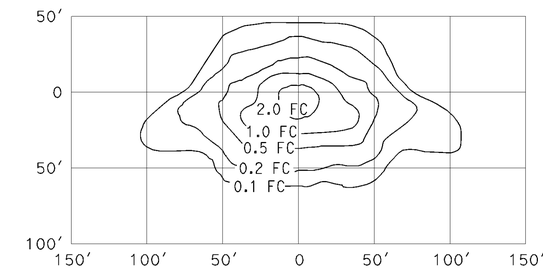

TYPE III MEDIUM CUTOFF

Cutoff Luminaire
30′ Mounting Height
Lamp operated at 16,000 lm
150-W high pressure sodium lamp
ANSI Designation S55

ISOFOOTCANDLE CURVE - MINIMUM

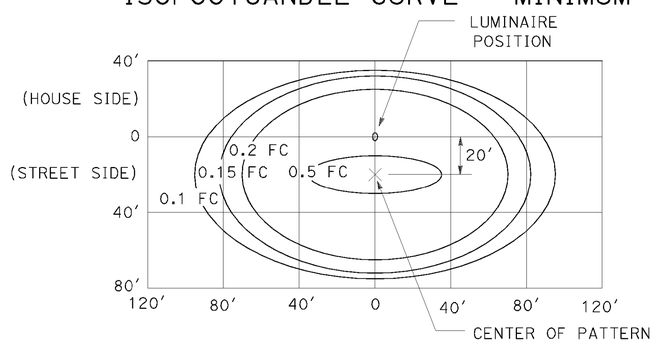

LED LUMINAIRE ROADWAY 1

165-W at 34′ Mounting Height

ISOFOOTCANDLE CURVE - MINIMUM

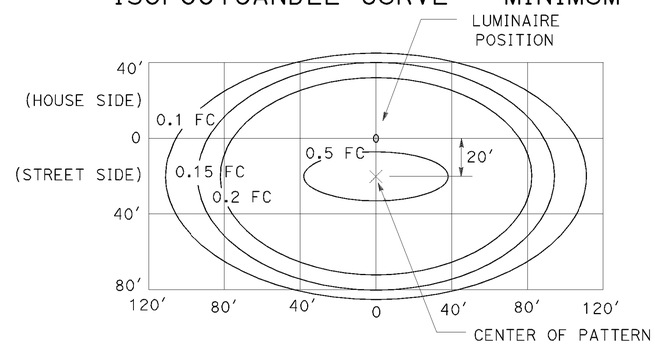

LED LUMINAIRE ROADWAY 2

235-W at 40′ Mounting Height

ISOFOOTCANDLE CURVE - MINIMUM

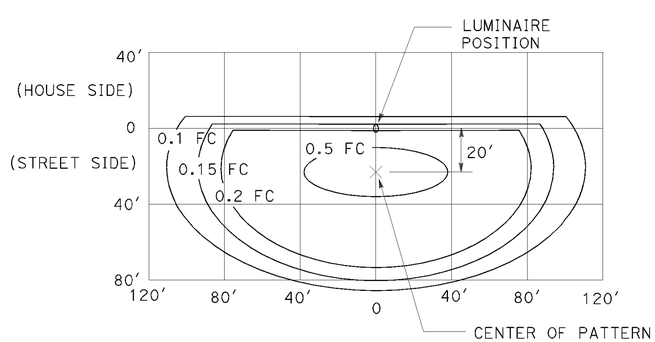

LED LUMINAIRE ROADWAY 3

235-W at 40′ Mounting Height
with back side control

ISOFOOTCANDLE CURVE - MINIMUM

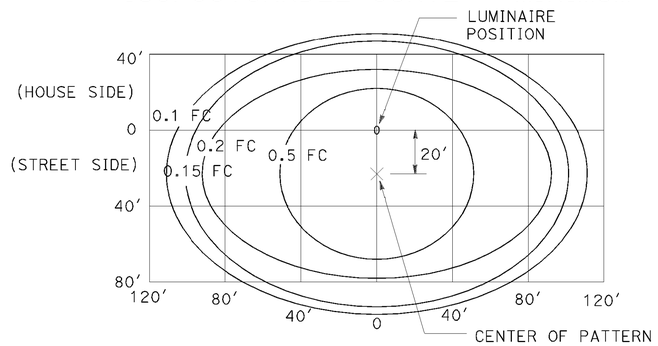

LED LUMINAIRE ROADWAY 4

300-W at 40′ Mounting Height

ISOFOOTCANDLE CURVE - MINIMUM

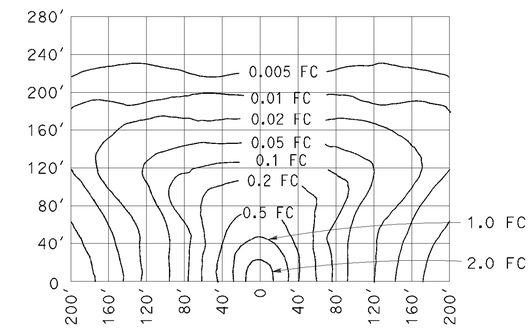

LOW PRESSURE SODIUM LUMINAIRE

40′ Mounting Height
Lamp operated at 33,000 lm
180-W low pressure sodium lamp

STATE OF CALIFORNIA
DEPARTMENT OF TRANSPORTATION

ELECTRICAL SYSTEMS (ISOFOOTCANDLE DIAGRAMS)

NO SCALE

RSP ES-10A DATED JULY 19, 2013 SUPERSEDES RSP ES-10A DATED JULY 20, 2012 THAT SUPPLEMENTS THE STANDARD PLANS BOOK DATED 2010.

REVISED STANDARD PLAN RSP ES-10A

2010 REVISED STANDARD PLAN RSP ES-10A

P:\PROJ\01\0B300\drafting\01_0B300\va014.dgn

7-9-13

Dist	COUNTY	ROUTE	POST MILES TOTAL PROJECT	SHEET No.	TOTAL SHEETS
01	DN	101	21.9	30	55

REGISTERED ELECTRICAL ENGINEER

July 20, 2012
PLANS APPROVAL DATE

REGISTERED PROFESSIONAL ENGINEER
Jeffery G. McRae
No. E14512
Exp. 6-30-14
ELECTRICAL
STATE OF CALIFORNIA

THE STATE OF CALIFORNIA OR ITS OFFICERS OR AGENTS SHALL NOT BE RESPONSIBLE FOR THE ACCURACY OR COMPLETENESS OF SCANNED COPIES OF THIS PLAN SHEET.

TO ACCOMPANY PLANS DATED 5-01-15

ISOFOOTCANDLE CURVE - MINIMUM

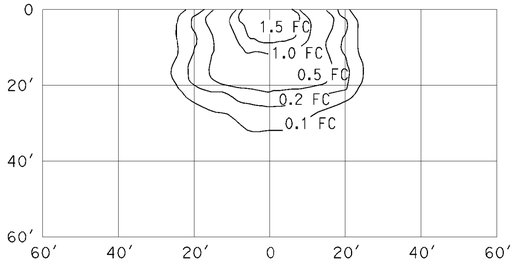

WALL LUMINAIRE
15′ Mounting Height
Lamp operated at 5,800 lm
70-W high pressure sodium lamp
ANSI Designation S62

ISOFOOTCANDLE CURVE - MINIMUM

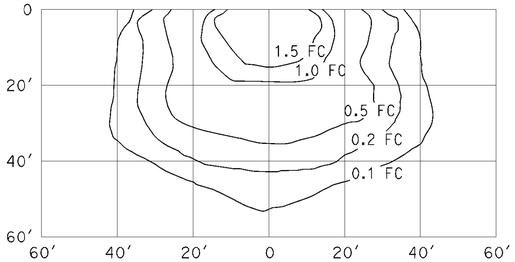

WALL LUMINAIRE
15′ Mounting Height
Lamp operated at 9,500 lm
100-W high pressure sodium lamp
ANSI Designation S54

ISOFOOTCANDLE CURVE - MINIMUM

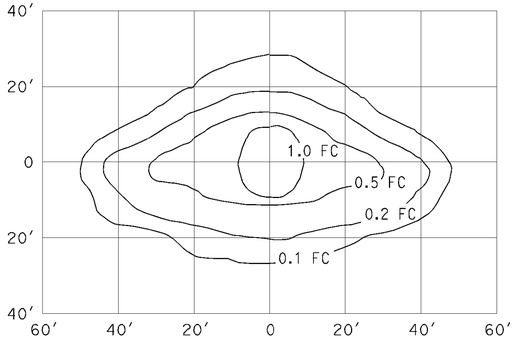

PENDANT SOFFIT LUMINAIRE
TYPE III SHORT
17′ Mounting Height
Lamp operated at 5,800 lm
70-W high pressure sodium lamp
ANSI Designation S62

ISOFOOTCANDLE CURVE - MINIMUM

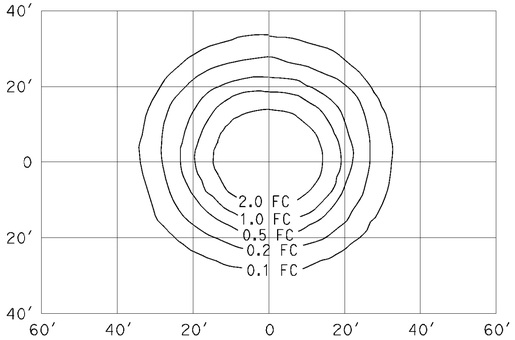

PENDANT SOFFIT LUMINAIRE
17′ Mounting Height
Lamp operated at 5,800 lm
70-W high pressure sodium lamp
ANSI Designation S62

ISOFOOTCANDLE CURVE - MINIMUM

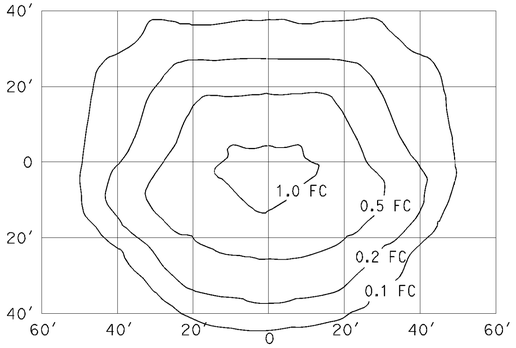

FLUSH SOFFIT LUMINAIRE
17′ Mounting Height
Lamp operated at 5,800 lm
70-W high pressure sodium lamp
ANSI Designation S62

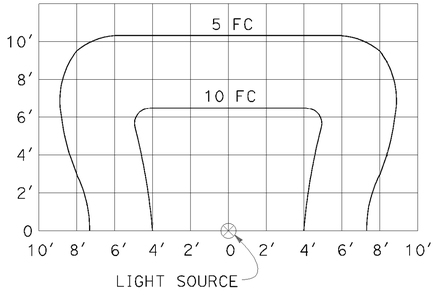

SIGN LIGHTING FIXTURE
ISOFOOTCANDLE DIAGRAM

NOTES:

1. Curves represent the minimum footcandle (FC) of initial illumination on a 10′-0″ x 20′-0″ panel.
2. The FC shown are with the fixture attached to the light fixture mounting channel which places the center of the source 4′-8″ in front of panel and 1′-0″ below the bottom edge.
3. Applicable lamp: 85-W fluorescent phosphor coated induction lamp.

STATE OF CALIFORNIA
DEPARTMENT OF TRANSPORTATION

ELECTRICAL SYSTEMS (ISOFOOTCANDLE DIAGRAMS)

NO SCALE

RSP ES-10B DATED JULY 20, 2012 SUPPLEMENTS THE STANDARD PLANS BOOK DATED 2010.

REVISED STANDARD PLAN RSP ES-10B

2010 REVISED STANDARD PLAN RSP ES-10B

P:\PROJ\01\0B300\drafting\01_0B300\va015.dgn

Dist	COUNTY	ROUTE	POST MILES TOTAL PROJECT	SHEET No.	TOTAL SHEETS
01	DN	101	21.9	31	55

Gregory A. Bolzer
LICENSED LANDSCAPE ARCHITECT

July 19, 2013
PLANS APPROVAL DATE

THE STATE OF CALIFORNIA OR ITS OFFICERS OR AGENTS SHALL NOT BE RESPONSIBLE FOR THE ACCURACY OR COMPLETENESS OF SCANNED COPIES OF THIS PLAN SHEET.

LICENSED LANDSCAPE ARCHITECT
Gregory A. Bolzer 2516
Expiration Date 2-28-15
Renewal Date 7-19-13
Date
STATE OF CALIFORNIA

TO ACCOMPANY PLANS DATED 5-01-15

A

AB	AGGREGATE BASE
ABS	ACRYLONITRILE-BUTADIENE-STYRENE
AC	ASPHALT CONCRETE
ACC	ARMOR-CLAD CONDUCTORS
Adj	ADJACENT/ADJUSTABLE
AIC	AUXILIARY IRRIGATION CONTROLLER
Alt	ALTERNATIVE
AMEND	AMENDMENT
ARV	AIR RELEASE VALVE
AUTO	AUTOMATIC
AUX	AUXILIARY
AVB	ATMOSPHERIC VACUUM BREAKER

B

B&B	BALLED AND BURLAPPED
B/B	BRASS/BRONZE
B/B/PL	BRASS/BRONZE/PLASTIC
B/PL	BRASS/PLASTIC
BFM	BONDED FIBER MATRIX
Bit Ctd	BITUMINOUS COATED
BP	BOOSTER PUMP
BPA	BACKFLOW PREVENTER ASSEMBLY
BPE	BACKFLOW PREVENTER ENCLOSURE
BV	BALL VALVE

C

C	CONDUIT
CAP	CORRUGATED ALUMINUM PIPE
CARV	COMBINATION AIR RELEASE VALVE
CB	COUPLING BAND
CCA	CAM COUPLER ASSEMBLY
CEC	CONTROLLER ENCLOSURE CABINET
CHDPE	CORRUGATED HIGH DENSITY POLYETHYLENE
CL	CHAIN LINK
CNC	CONTROL AND NEUTRAL CONDUCTORS
Conc	CONCRETE
CP	COPPER PIPE
CS	COMPOST SOCK
CSP	CORRUGATED STEEL PIPE
CST	CENTER STRIP
CV	CHECK VALVE

D

Dia	DIAMETER
DIP	DUCTILE IRON PIPE
DIT	DRIP IRRIGATION TUBING
DG	DECOMPOSED GRANITE
DN	DIAMETER NOMINAL
DVA	DRIP VALVE ASSEMBLY

E

EC	EROSION CONTROL
ECTC	EROSION CONTROL TECHNOLOGY COUNCIL
Elect	ELECTRIC/ELECTRICAL
Elev	ELEVATION
ELL	ELBOW
ENCL	ENCLOSURE
EP	EDGE OF PAVEMENT
ES	EDGE OF SHOULDER
EST	END STRIP
ESTB	ESTABLISHMENT
ETW	EDGE OF TRAVELED WAY

F

F	FULL CIRCLE
F/P	FULL/PART CIRCLE
FCV	FLOW CONTROL VALVE
FERT	FERTILIZER
FG	FINISHED GRADE
FH	FLEXIBLE HOSE
FIPT	FEMALE IRON PIPE THREAD
FIS	FERTILIZER INJECTOR SYSTEM
FL	FLOW LINE
FR	FIBER ROLL
FS	FLOW SENSOR
FSC	FLOW SENSOR CABLE
FV	FLUSH VALVE

G

Galv	GALVANIZED
GARV	GARDEN VALVE
GARVA	GARDEN VALVE ASSEMBLY
GM	GRAVEL MULCH
GPH	GALLONS PER HOUR
GPM	GALLONS PER MINUTE
GSP	GALVANIZED STEEL PIPE
GV	GATE VALVE

H

H	HALF CIRCLE
HDPE	HIGH DENSITY POLYETHYLENE
HP	HORSEPOWER/HINGE POINT
HPL	HIGH PRESSURE LINE
Hwy	HIGHWAY

I

IC	IRRIGATION CONTROLLER
ICC	IRRIGATION CONTROLLER(S) IN CONTROLLER ENCLOSURE CABINET
ID	INSIDE DIAMETER
IFS	IRRIGATION FILTRATION SYSTEM
IPS	IRON PIPE SIZE
IPT	IRON PIPE THREAD
Irr	IRRIGATION

L

L	LENGTH

M

Max	MAXIMUM
MBGR	METAL BEAM GUARD RAILING
MCV	MANUAL CONTROL VALVE
MIC	MASTER IRRIGATION CONTROLLER
Min	MINIMUM
MIPT	MALE IRON PIPE THREAD
Misc	MISCELLANEOUS
Mtl	MATERIAL
MVP	MAINTENANCE VEHICLE PULLOUT

N

NCN	NO COMMON NAME
NL	NOZZLE LINE
No.	NUMBER
NPT	NATIONAL PIPE THREAD

O

O/C	ON CENTER
OD	OUTSIDE DIAMETER
OL	OVERLAP

P

P	PART CIRCLE
PB	PULL BOX
PCC	PORTLAND CEMENT CONCRETE
PE	POLYETHYLENE
Pkt	PACKET
PL	PLASTIC
PLS	PURE LIVE SEED
PLT	PLANT/PLANTING
PLT ESTB	PLANT ESTABLISHMENT
PM	POST MILE
PR	PRESSURE RATED
PRLV	PRESSURE RELIEF VALVE
PRV	PRESSURE REGULATING VALVE
PVC	POLYVINYL CHLORIDE
Pvmt	PAVEMENT

Q

Q	QUARTER CIRCLE
QCV	QUICK COUPLING VALVE

NOTE:

For additional abbreviations, see Standard Plans A10A and A10B.

R

R	RADIUS
RCP	REINFORCED CONCRETE PIPE
RCV	REMOTE CONTROL VALVE
RCVM	REMOTE CONTROL VALVE (MASTER)
RCVMF	REMOTE CONTROL VALVE (MASTER) W/FLOW SENSOR
RCVP	REMOTE CONTROL VALVE W/PRESSURE REGULATOR
RCW	RECYCLED WATER
RECP	ROLLED EROSION CONTROL PRODUCT
REQ	REQUIRED
RICS	REMOTE IRRIGATION CONTROL SYSTEM
R/W	RIGHT OF WAY

S

S	SLIP
SCH	SCHEDULE
SF	STATE-FURNISHED
Shld	SHOULDER
Sq	SQUARE
SST	SIDE STRIP
Sta	STATION
Std	STANDARD
SW	SIDEWALK/SOUND WALL

T

T	THIRD CIRCLE/THREAD
TLS	TRUCK LOADING STANDPIPE
TQ	THREE QUARTER CIRCLE
TRM	TURF REINFORCEMENT MAT
TT	TWO-THIRDS CIRCLE
TWSA	TREE WELL SPRINKLER ASSEMBLY
Typ	TYPICAL

U

UG	UNDERGROUND

W

W	WIDTH
W/	WITH
WM	WATER METER
WS	WYE STRAINER
WSA	WYE STRAINER ASSEMBLY
WSP	WELDED STEEL PIPE
WWM	WELDED WIRE MESH

STATE OF CALIFORNIA
DEPARTMENT OF TRANSPORTATION

LANDSCAPE AND EROSION CONTROL ABBREVIATIONS

NO SCALE

RSP H1 DATED JULY 19, 2013 SUPERSEDES STANDARD PLAN H1
DATED MAY 20, 2011 - PAGE 218 OF THE STANDARD PLANS BOOK DATED 2010.

REVISED STANDARD PLAN RSP H1

2010 REVISED STANDARD PLAN RSP H1

P:\PROJ\01\0B300\drafting\01_0B300\va016.dgn

6-28-13

DIST	COUNTY	ROUTE	POST MILES TOTAL PROJECT	SHEET No.	TOTAL SHEETS
01	DN	101	21.9	32	55

REGISTERED CIVIL ENGINEER

November 15, 2013
PLANS APPROVAL DATE

REGISTERED PROFESSIONAL ENGINEER
Cornelis M. Hakim
No. C55610
Exp. 12-31-14
CIVIL
STATE OF CALIFORNIA

THE STATE OF CALIFORNIA OR ITS OFFICERS OR AGENTS SHALL NOT BE RESPONSIBLE FOR THE ACCURACY OR COMPLETENESS OF SCANNED COPIES OF THIS PLAN SHEET.

TO ACCOMPANY PLANS DATED 5-01-15

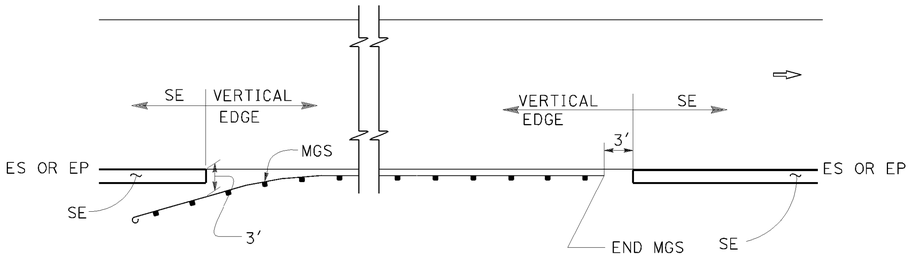

MGS

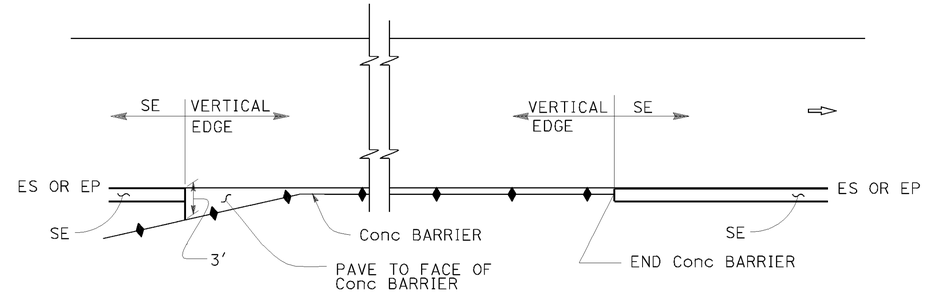

CONCRETE BARRIER

ABBREVIATIONS:

SE SAFETY EDGE

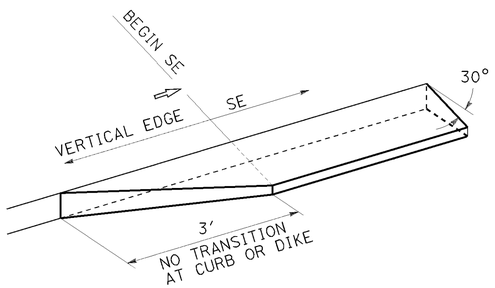

TRANSITION DETAIL
FOR CONCRETE ONLY

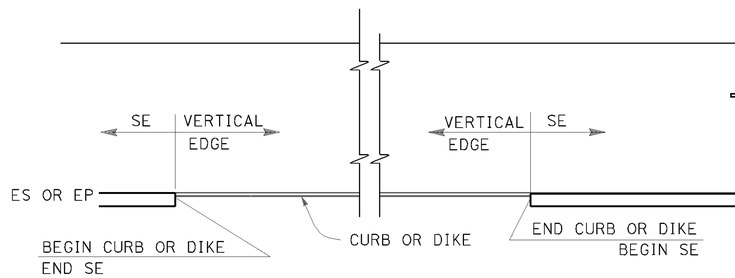

CURB OR DIKE

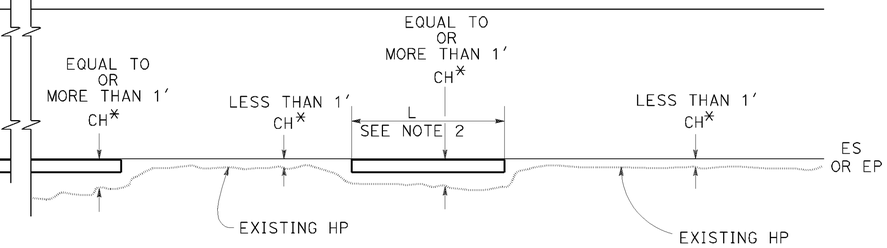

NARROW SIDE SLOPE

* CH = Distance from ES or EP to existing HP.

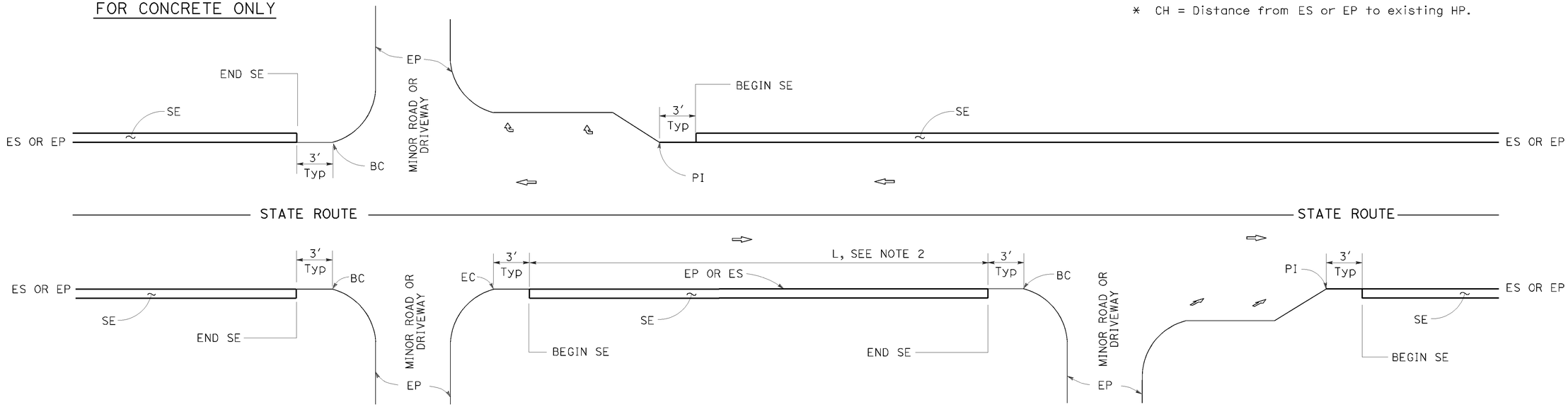

INTERSECTION

MINOR ROADWAY OR DRIVEWAY

DRIVEWAY AND INTERSECTION

NOTES:

1. For details not shown, see Revised Standard Plans RSP P75 and RSP P76.
2. Safety edge is optional when L is less than 30′.

STATE OF CALIFORNIA
DEPARTMENT OF TRANSPORTATION

PAVEMENT EDGE TREATMENTS

NO SCALE

RSP P74 DATED NOVEMBER 15, 2013 SUPERSEDES RSP P74 DATED JANUARY 20, 2012 THAT SUPPLEMENTS THE STANDARD PLANS BOOK DATED 2010.

REVISED STANDARD PLAN RSP P74

2010 REVISED STANDARD PLAN RSP P74

P:\PROJ\01\0B300\drafting\01_0B300\vg017.dgn

10-11-13

DIST	COUNTY	ROUTE	POST MILES TOTAL PROJECT	SHEET No.	TOTAL SHEETS
01	DN	101	21.9	33	55

REGISTERED CIVIL ENGINEER

November 15, 2013
PLANS APPROVAL DATE

REGISTERED PROFESSIONAL ENGINEER Cornelis M. Hakim No. C55610 Exp. 12-31-14 CIVIL STATE OF CALIFORNIA

THE STATE OF CALIFORNIA OR ITS OFFICERS OR AGENTS SHALL NOT BE RESPONSIBLE FOR THE ACCURACY OR COMPLETENESS OF SCANNED COPIES OF THIS PLAN SHEET.

TO ACCOMPANY PLANS DATED 5-01-15

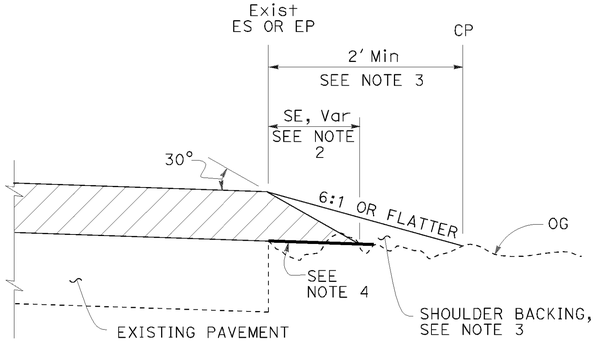

CASE A
Safety Edge

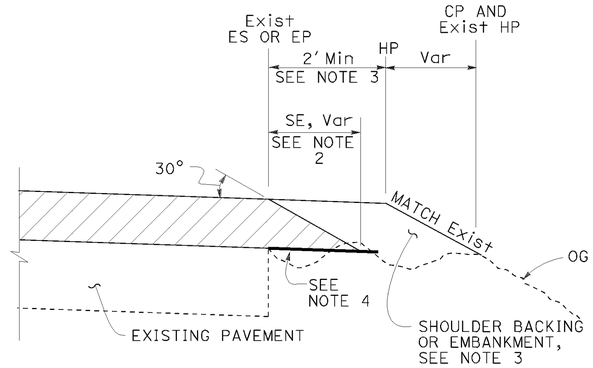

CASE B
Safety Edge

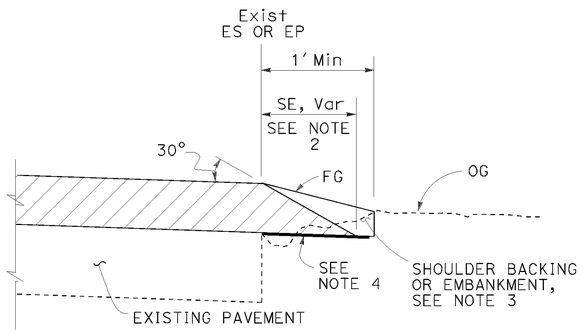

CASE C
Safety Edge

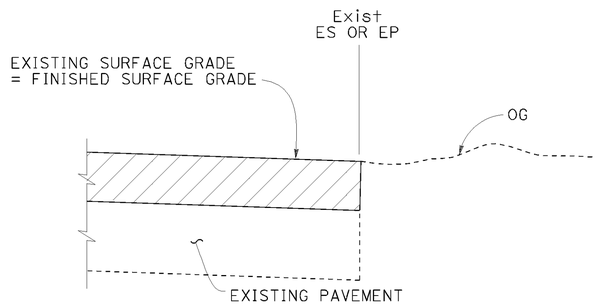

CASE D
Vertical Edge

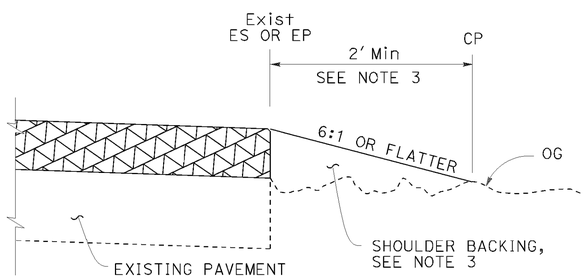

CASE E
Vertical Edge

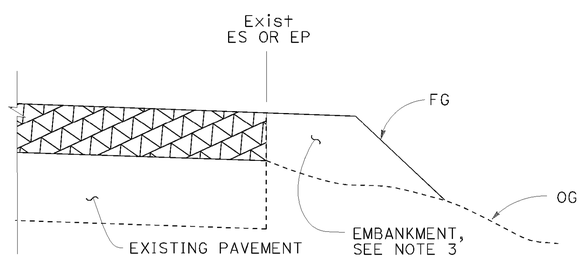

CASE F
Vertical Edge
* See Table A and Revised Std Plan RSP P74

LEGEND:

- HMA OVERLAY
- HMA OR CONCRETE OVERLAY
- CONCRETE OVERLAY

ABBREVIATIONS:

SE SAFETY EDGE
TT TOTAL THICKNESS OF SE

TABLE A
EDGE TREATMENT FOR VARIOUS OVERLAY THICKNESS AND CONDITIONS

	OVERLAY THICKNESS	
FIELD CONDITION	LESS THAN 0.15'	0.15' OR MORE
Exist SLOPE 6:1 OR FLATTER	CASE E	CASE A
Exist SLOPE 3:1 TO 6:1	CASE E	CASE B
Exist SLOPE STEEPER THAN 3:1	CASE F	CASE F
CUT SECTION (REPLACE, COLD PLANE, MILL PAVEMENT)	CASE D	CASE C

ADDITIONAL HMA OR CONCRETE QUANTITIES FOR SE/SIDE/MILE

TYPICAL CROSS SECTION	TT	TOTAL ADDITIONAL MATERIAL FOR SE/SIDE/MILE		
		HMA (TON)	CONCRETE (CY)*	CONCRETE (CY)**
TT	0.15'	NA	NA	NA
	0.20'	13.7	NA	NA
	0.30'	30.9	NA	NA
	0.40'	54.9	NA	NA
	0.45'	69.4	NA	NA
TT 0.43'	0.50'	84.2	NA	NA
	0.60'	113.9	NA	NA
	0.70'	143.6	70.9	94.2
	0.80'	173.3	85.6	112.2
	0.90'	203.0	100.3	130.2
	1.00'	232.7	114.9	148.2
	1.10'	262.4	129.6	166.2
	1.20'	292.1	144.3	184.2

* For Detail "A"
** For Optional Detail "A"

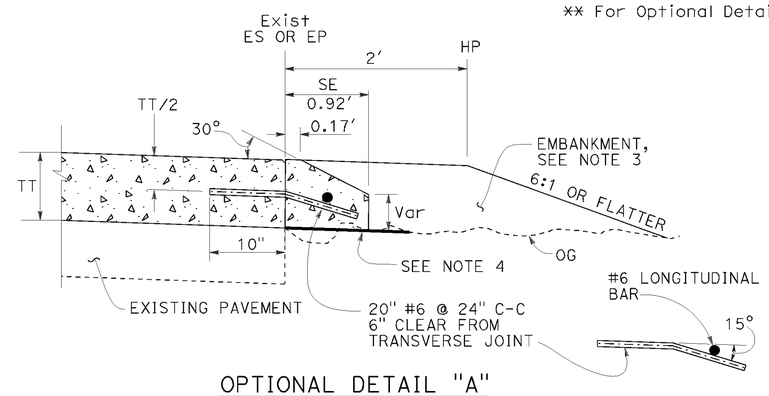

OPTIONAL DETAIL "A"
For concrete overlay
See Note 5

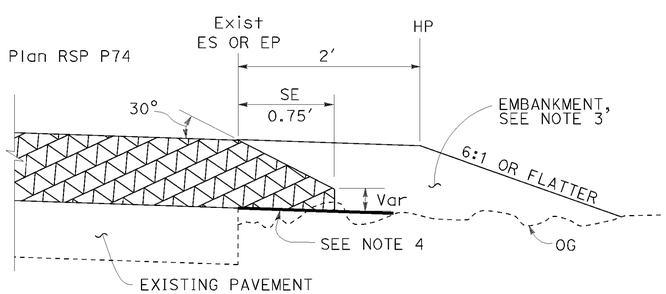

DETAIL "A"
For HMA overlay thickness more than 0.43' or concrete overlay

NOTES:

1. For limits of safety edge and vertical edge treatments, see Revised Standard Plan RSP P74.
2. Details shown for HMA overlay thickness less than 0.43'. See Detail "A" for HMA overlay thickness more than 0.43' or concrete overlay.
3. For locations and limits of shoulder backing or embankment see project plans.
4. Grade existing ground to place safety edge. 1' minimum width
5. Safety edge transverse joint must match overlay transverse joint. End of #6 longitudinal bar must be 2" ±½" clear from transverse joint.
6. Safety edge is not needed in the area of MGS, barrier, right turn lane and acceleration lane. See Revised Standard Plan RSP P74.

STATE OF CALIFORNIA
DEPARTMENT OF TRANSPORTATION

PAVEMENT EDGE TREATMENTS-OVERLAYS

NO SCALE

RSP P75 DATED NOVEMBER 15, 2013 SUPERSEDES RSP P75 DATED JANUARY 20, 2012 THAT SUPPLEMENTS THE STANDARD PLANS BOOK DATED 2010.

REVISED STANDARD PLAN RSP P75

2010 REVISED STANDARD PLAN RSP P75

P:\PROJ\01\0B300\drafting\01_0B300\va018.dgn

10-4-13

Dist	COUNTY	ROUTE	POST MILES TOTAL PROJECT	SHEET No.	TOTAL SHEETS
01	DN	101	21.9	34	55

REGISTERED CIVIL ENGINEER

July 19, 2013
PLANS APPROVAL DATE

REGISTERED PROFESSIONAL ENGINEER
Gurinderpal Bhullar
No. C48815
Exp. 9-30-14
CIVIL
STATE OF CALIFORNIA

THE STATE OF CALIFORNIA OR ITS OFFICERS OR AGENTS SHALL NOT BE RESPONSIBLE FOR THE ACCURACY OR COMPLETENESS OF SCANNED COPIES OF THIS PLAN SHEET.

TO ACCOMPANY PLANS DATED 5-01-15

TABLE 1

TAPER LENGTH CRITERIA AND CHANNELIZING DEVICE SPACING

SPEED (S)	MINIMUM TAPER LENGTH * FOR WIDTH OF OFFSET 12 FEET (W)				MAXIMUM CHANNELIZING DEVICE SPACING		
					X	Y	Z **
	TANGENT 2L	MERGING L	SHIFTING L/2	SHOULDER L/3	TAPER	TANGENT	CONFLICT
mph	ft	ft	ft	ft	ft	ft	ft
20	160	80	40	27	20	40	10
25	250	125	63	42	25	50	12
30	360	180	90	60	30	60	15
35	490	245	123	82	35	70	17
40	640	320	160	107	40	80	20
45	1080	540	270	180	45	90	22
50	1200	600	300	200	50	100	25
55	1320	660	330	220	55	110	27
60	1440	720	360	240	60	120	30
65	1560	780	390	260	65	130	32
70	1680	840	420	280	70	140	35

* - For other offsets, use the following merging taper length formula for L:
For speed of 40 mph or less, $L = WS^2/60$
For speed of 45 mph or more, $L = WS$

Where: L = Taper length in feet
W = Width of offset in feet
S = Posted speed limit, off-peak 85th-percentile speed prior to work starting, or the anticipated operating speed in mph

** - Use for taper and tangent sections where there are no pavement markings or where there is a conflict between existing pavement markings and channelizers (CA).

TABLE 2

LONGITUDINAL BUFFER SPACE AND FLAGGER STATION SPACING

SPEED *	Min D **	DOWNGRADE Min D ***		
		-3%	-6%	-9%
mph	ft	ft	ft	ft
20	115	116	120	126
25	155	158	165	173
30	200	205	215	227
35	250	257	271	287
40	305	315	333	354
45	360	378	400	427
50	425	446	474	507
55	495	520	553	593
60	570	598	638	686
65	645	682	728	785
70	730	771	825	891

* - Speed is posted speed limit, off-peak 85th-percentile speed prior to work starting, or the anticipated operating speed in mph

** - Longitudinal buffer space or flagger station spacing

*** - Use on sustained downgrade steeper than -3 percent and longer than 1 mile.

TABLE 3

ADVANCE WARNING SIGN SPACING

ROAD TYPE	DISTANCE BETWEEN SIGNS *		
	A	B	C
	ft	ft	ft
URBAN - 25 mph OR LESS	100	100	100
URBAN - MORE THAN 25 mph TO 40 mph	250	250	250
URBAN - MORE THAN 40 mph	350	350	350
RURAL	500	500	500
EXPRESSWAY / FREEWAY	1000	1500	2640

* - The distances are approximate, are intended for guidance purposes only, and should be applied with engineering judgment. These distances should be adjusted by the Engineer for field conditions, if necessary, by increasing or decreasing the recommmended distances.

STATE OF CALIFORNIA
DEPARTMENT OF TRANSPORTATION

TRAFFIC CONTROL SYSTEM TABLES FOR LANE AND RAMP CLOSURES

NO SCALE

RSP T9 DATED JULY 19, 2013 SUPERSEDES RSP T9 DATED APRIL 19, 2013 THAT SUPPLEMENTS THE STANDARD PLANS BOOK DATED 2010.

REVISED STANDARD PLAN RSP T9

2010 REVISED STANDARD PLAN RSP T9

P:\PROJ\01\0B300\drafting\01_0B300\va019.dgn

4-30-13

TO ACCOMPANY PLANS DATED 5-01-15

Dist	COUNTY	ROUTE	POST MILES TOTAL PROJECT	SHEET No.	TOTAL SHEETS
01	DN	101	21.9	35	55

REGISTERED CIVIL ENGINEER

April 19, 2013
PLANS APPROVAL DATE

REGISTERED PROFESSIONAL ENGINEER Gurinderpal Bhullar No. C48815 Exp. 9-30-14 CIVIL STATE OF CALIFORNIA

THE STATE OF CALIFORNIA OR ITS OFFICERS OR AGENTS SHALL NOT BE RESPONSIBLE FOR THE ACCURACY OR COMPLETENESS OF SCANNED COPIES OF THIS PLAN SHEET.

NOTES:

See Revised Standard Plan RSP T9 for tables.

Use cone spacing X for taper segment, Y for tangent segment or Z for conflict situations, as approriate, per Table 1, unless X, Y, or Z cone spacing is shown on this sheet.

Unless otherwise specified in the special provisions, all temporary warning signs shall have black legend on fluorescent orange background.

California codes are designated by (CA). Otherwise, Federal (MUTCD) codes are shown.

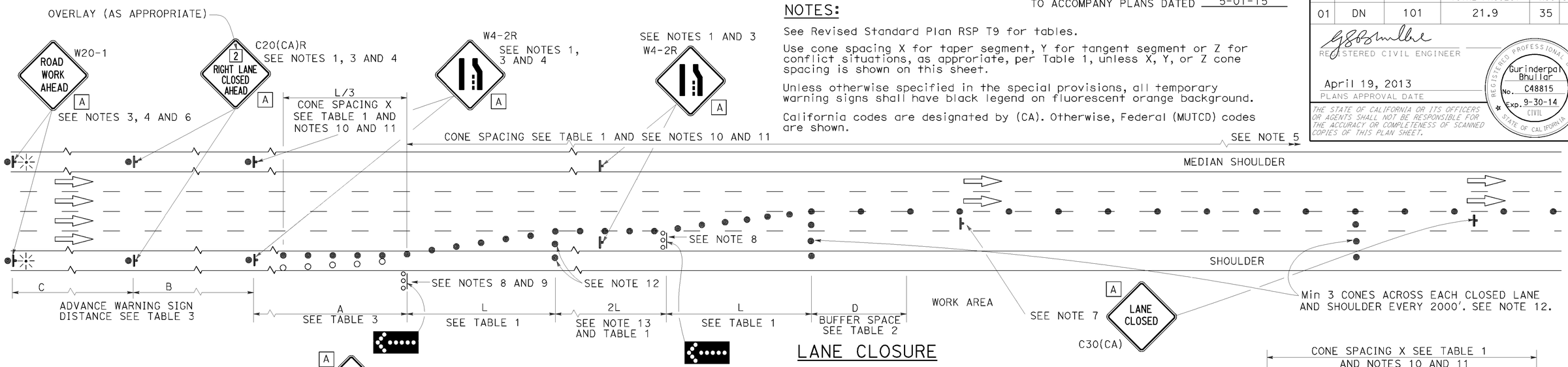

LANE CLOSURE

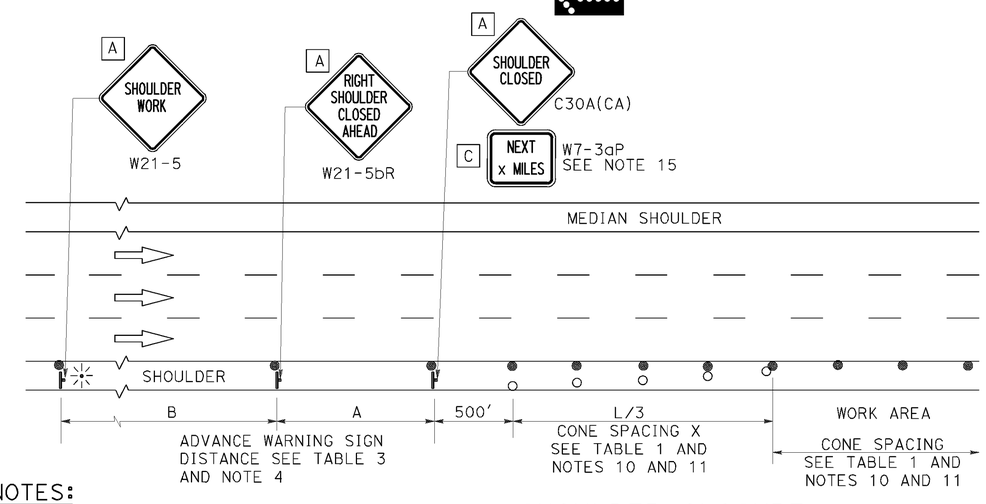

SHOULDER CLOSURE

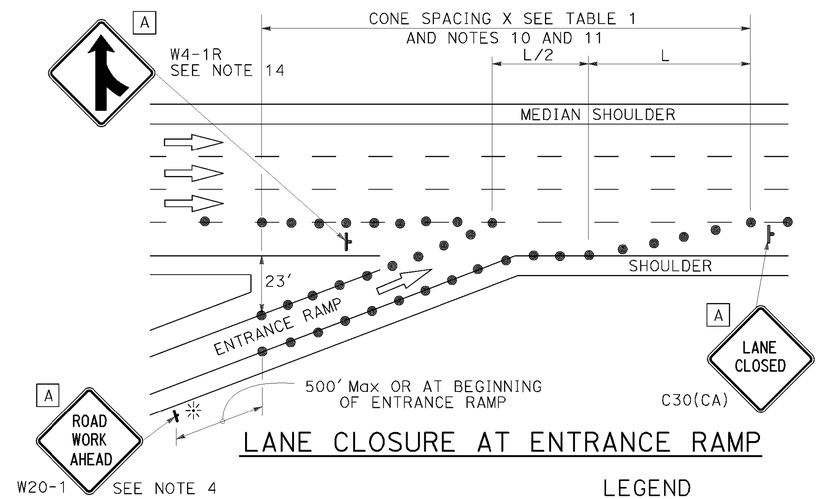

LANE CLOSURE AT ENTRANCE RAMP

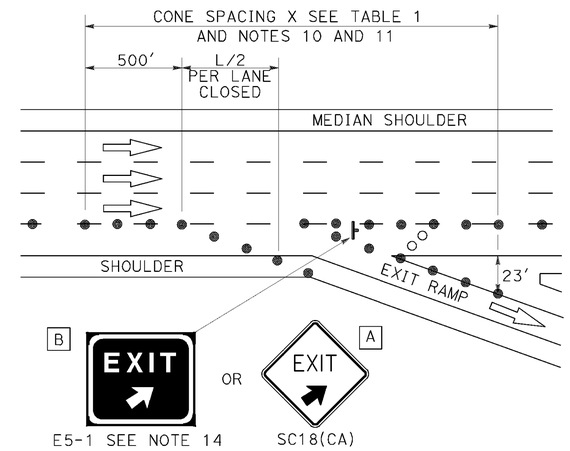

LANE CLOSURE AT EXIT RAMP

NOTES:

1. Median lane closures shall conform to the details as shown except that C20(CA)L and W4-2L signs shall be used.
2. At least one person shall be assigned to provide full time maintenance of traffic control devices for lane closures.
3. Duplicate sign installations are not required:
   a) On opposite shoulder if at least one-half of the available lanes remain open to traffic.
   b) In the median if the width of the median shoulder is less than 8' and the outside lanes are to be closed.
4. Each advance warning sign on each side of the roadway shall be equipped with at least two flags for daytime closure. Each flag shall be at least 16" x 16" in size and shall be orange or fluorescent red-orange in color. Flashing beacons shall be placed at the locations indicated for lane closure during hours of darkness.
5. A G20-2 "END ROAD WORK" sign, with minimum size of 48" x 24" as appropriate, shall be placed at the end of the lane closure unless the end of work area is obvious or ends within a larger project's limits.
6. If the W20-1 sign would follow within 2000' of a stationary W20-1 or G20-1 "ROAD WORK NEXT _____ MILES", use a C20(CA) sign for the first advance warning sign.
7. Place a C30(CA) sign every 2000' throughout length of lane closure.
8. One flashing arrow sign for each lane closed. The flashing arrow signs shall be Type I.
9. A minimum 1500' of sight distance shall be provided where possible for vehicles approaching the first flashing arrow sign. Lane closures shall not begin at top of crest vertical curve or on a horizontal curve.
10. All cones used for lane closures during the hours of darkness shall be fitted with retroreflective bands (or sleeves) as specified in the specifications.
11. Portable delineators, placed at one-half the spacing indicated for traffic cones may be used instead of cones for daytime closures only.
12. Unless otherwise specified in the special provisions, a minimum of 3 cones shall be placed transversely across each closed lane and shoulder at each location where a taper across a traffic lane ends and every 2000' as shown on the "Lane Closure" detail. Two Type II barricades may be used instead of the 3 cones. The transverse alignment of the cones or barricades on the closed shoulder may be shifted from the transverse alignment to provide access to the work.
13. Unless otherwise specified in the special provisions, the 2L tangent shown along lane lines shall be used between the L tapers required for each closed traffic lane.
14. Unless otherwise specified in the special provisions, the E5-1 or SC18(CA) and W4-1 signs shall be used as shown.
15. A W7-3aP "NEXT____ MILES" plaque must be used if theshoulder closure extends beyond the distance that can be perceived by road users.

LEGEND

- TRAFFIC CONE
- TRAFFIC CONE (OPTIONAL TAPER)
- TEMPORARY TRAFFIC CONTROL SIGN
- FLASHING ARROW SIGN (FAS)
- FAS SUPPORT OR TRAILER
- PORTABLE FLASHING BEACON

SIGN PANEL SIZE (Min)

A	48" x 48"
B	72" x 60"
C	36" x 30"

STATE OF CALIFORNIA
DEPARTMENT OF TRANSPORTATION

TRAFFIC CONTROL SYSTEM FOR LANE CLOSURE ON FREEWAYS AND EXPRESSWAYS

NO SCALE

RSP T10 DATED APRIL 19, 2013 SUPERSEDES STANDARD PLAN T10 DATED MAY 20, 2011 - PAGE 237 OF THE STANDARD PLANS BOOK DATED 2010.

REVISED STANDARD PLAN RSP T10

2010 REVISED STANDARD PLAN RSP T10

P:\PROJ\01\0B300\drafting\01_0B300\vd020.dgn

12-18-12

Dist	COUNTY	ROUTE	POST MILES TOTAL PROJECT	SHEET No.	TOTAL SHEETS
01	DN	101	21.9	36	55

REGISTERED CIVIL ENGINEER

April 19, 2013
PLANS APPROVAL DATE

REGISTERED PROFESSIONAL ENGINEER Gurinderpal Bhullar No. C48815 Exp. 9-30-14 CIVIL STATE OF CALIFORNIA

THE STATE OF CALIFORNIA OR ITS OFFICERS OR AGENTS SHALL NOT BE RESPONSIBLE FOR THE ACCURACY OR COMPLETENESS OF SCANNED COPIES OF THIS PLAN SHEET.

TO ACCOMPANY PLANS DATED 5-01-15

LEGEND

- TRAFFIC CONE
- TEMPORARY TRAFFIC CONTROL SIGN
- FLASHING ARROW SIGN (FAS)
- FAS SUPPORT OR TRAILER
- PORTABLE FLASHING BEACON

SIGN PANEL SIZE (Min)

A	48" x 48"
B	24" x 24"
C	36" x 18"

NOTES:

See Revised Standard Plan RSP T9 for tables.

Use cone spacing X for taper segment, Y for tangent segment or Z for conflict situations, as approriate, per Table 1, unless X, Y, or Z cone spacing is shown on this sheet.

Unless otherwise specified in the special provisions, all temporary warning signs shall have black legend on fluorescent orange background.

California codes are designated by (CA). Otherwise, Federal (MUTCD) codes are shown.

TYPICAL HALF ROAD CLOSURE

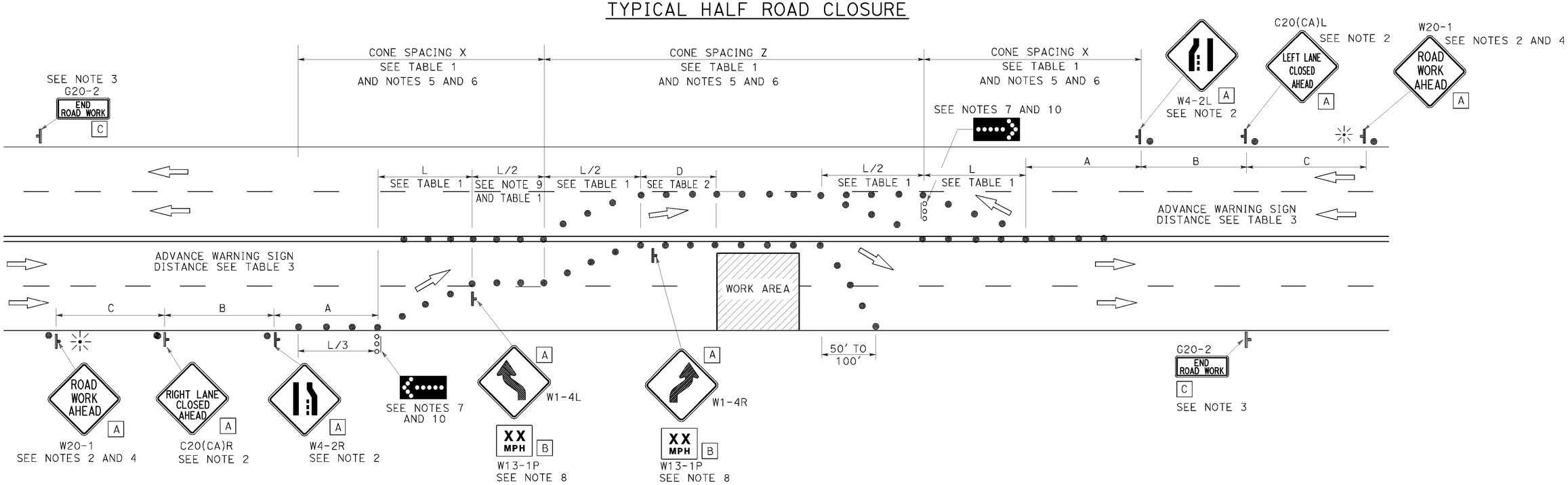

NOTES:

1. At least one person shall be assigned to provide full time maintenance of traffic control devices for lane closure unless, otherwise directed by the Engineer.
2. Each advance warning sign in each direction of travel shall be equipped with at least two flags for daytime closure. Each flag shall be at least 16" x 16" in size and shall be orange or fluorescent red-orange in color. Flashing beacons shall be placed at the locations indicated for lane closure during hours of darkness.
3. A G20-2 "END ROAD WORK" sign, as appropriate, shall be placed at the end of the lane closure unless the end of work area is obvious, or ends within a larger project's limits.
4. If the W20-1 sign would follow within 2000' of a stationary W20-1 or G20-1 "ROAD WORK NEXT _____ MILES", use a C20(CA) sign for the first advance warning sign.
5. All cones used for lane closures during the hours of darkness shall be fitted with retroreflective bands (or sleeves) as specified in the specifications.
6. Portable delineators, placed at one-half the spacing indicated for traffic cones, may be used instead of cones for daytime closures only.
7. Flashing arrow signs shall be either Type I or Type II.
8. Advisory speed will be determined by the Engineer. The W13-1P Plaque will not be required when advisory speed is more than the posted or maximum speed limit.
9. Unless otherwise specified in the special provisions, the tangent (L/2) shall be used.
10. A minimum 1500' of sight distance shall be provided where possible for vehicles approaching the first flashing arrow sign. Lane closures shall not begin at the top of crest vertical curve or on a horizontal curve.

STATE OF CALIFORNIA
DEPARTMENT OF TRANSPORTATION

TRAFFIC CONTROL SYSTEM FOR HALF ROAD CLOSURE ON MULTILANE CONVENTIONAL HIGHWAYS AND EXPRESSWAYS

NO SCALE

RSP T12 DATED APRIL 19, 2013 SUPERSEDES STANDARD PLAN T12
DATED MAY 20, 2011 - PAGE 240 OF THE STANDARD PLANS BOOK DATED 2010.

REVISED STANDARD PLAN RSP T12

2010 REVISED STANDARD PLAN RSP T12

P:\PROJ\01\08300\drafting\01_08300\vd021.dgn

4-2-13

Dist	COUNTY	ROUTE	POST MILES TOTAL PROJECT	SHEET No.	TOTAL SHEETS
01	DN	101	21.9	37	55

REGISTERED CIVIL ENGINEER

April 19, 2013
PLANS APPROVAL DATE

REGISTERED PROFESSIONAL ENGINEER Gurinderpal Bhullar No. C48815 Exp. 9-30-14 CIVIL STATE OF CALIFORNIA

THE STATE OF CALIFORNIA OR ITS OFFICERS OR AGENTS SHALL NOT BE RESPONSIBLE FOR THE ACCURACY OR COMPLETENESS OF SCANNED COPIES OF THIS PLAN SHEET.

TO ACCOMPANY PLANS DATED 5-01-15

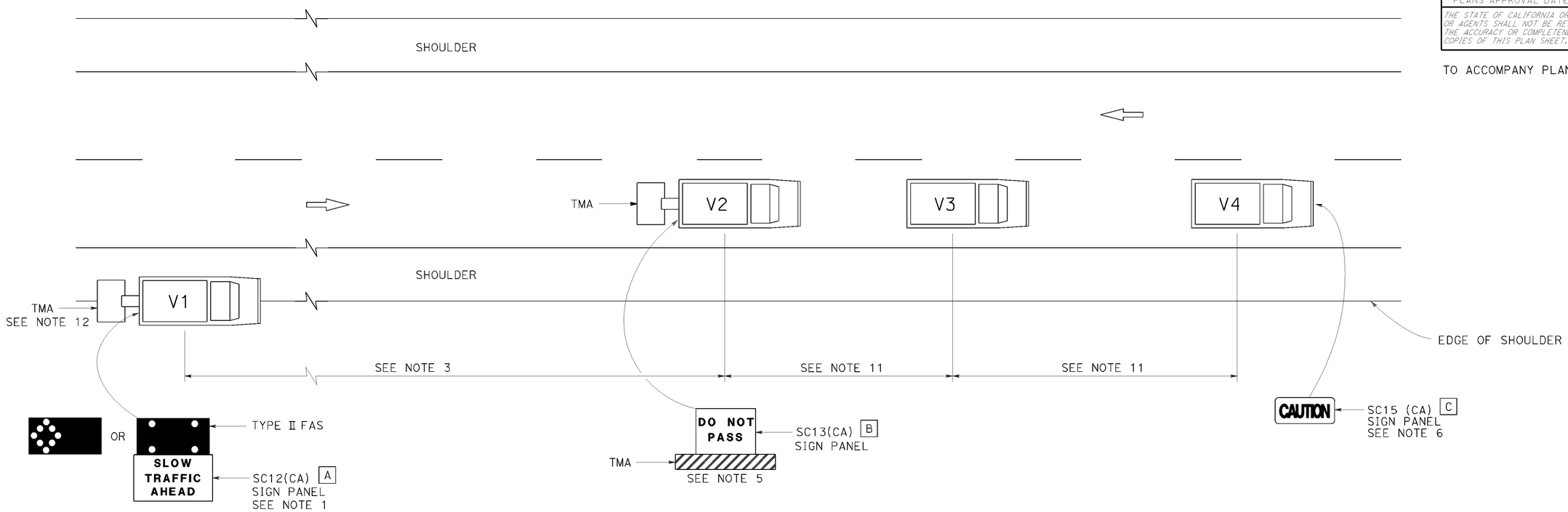

LEGEND

V1	SIGN VEHICLE
V2	SHADOW VEHICLE
V3	WORK/APPLICATION VEHICLE
V4	SIGN VEHICLE
TMA	TRUCK-MOUNTED ATTENUATOR
	FLASHING ARROW SIGN (FAS) IN FLASHING CAUTION MODE
	FLASHING ARROW SIGN (FAS) IN ALTERNATING DIAMOND CAUTION

SIGN PANEL SIZE (Min)

A	72" × 42"
B	54" × 42"
C	54" × 24"

NOTES:

1. Either a changeable message sign or a SC12(CA) "SLOW TRAFFIC AHEAD" sign shall be mounted on the rear of sign vehicle V1. The changeable message sign shall be sequenced to show the "CAUTION" message first, follow by the "SLOW TRAFFIC AHEAD" message. A Type II flashing arrow sign may be used with the SC12(CA) sign panel.
2. Sign vehicle V1 should be positioned where highly visible when shoulders are not available.
3. If traffic queues develop, sign vehicle V1 should be positioned upstream from the end of queue.
4. Vehicle-mounted sign panels shall have Type III or above retroreflective sheeting, black on white, or black on fluorescent orange, with 6" minimum series D letters per Caltrans sign specifications.
5. Shadow vehicle shall be equipped with a truck-mounted attenuator. The sign panel shown shall be mounted on the rear of shadow vehicle V2. The message "LANE CLOSED" may be used in place of the "DO NOT PASS" message.
6. The sign panel shown shall be mounted on the front of sign vehicle V4, facing opposing traffic.
7. All vehicles shall be equipped with flashing or rotating amber lights.
8. Sign vehicle V4 will not be required when the work and vehicles V2 and V3 are 2′ or more from the centerline of the highway during the work or application operations.
9. All vehicles used for lane closures shall be equipped with two-way radios and the vehicle operators shall maintain communication during the work or application operation.
10. This plan shall not be used where workers would be on foot in the work area. Use a stationary type lane closure (Revised Standard Plan T13) for this condition.
11. Minimize spacing between vehicles V2 and V3 and vehicles V3 and V4 to deter road users from driving in between them.
12. If sign vehicle V1 encroaches into the traffic lane due to insufficient shoulder width, sign vehicle V1 shall be equipped with a truck-mounted attenuator. Sign vehicle V1 shall stay as close to the edge of shoulder as practicable.

STATE OF CALIFORNIA
DEPARTMENT OF TRANSPORTATION

TRAFFIC CONTROL SYSTEM FOR MOVING LANE CLOSURE ON TWO LANE HIGHWAYS

NO SCALE

RSP T17 DATED APRIL 19, 2013 SUPERSEDES STANDARD PLAN T17
DATED MAY 20, 2011 - PAGE 245 OF THE STANDARD PLANS BOOK DATED 2010.

REVISED STANDARD PLAN RSP T17

2010 REVISED STANDARD PLAN RSP T17

P:\PROJ\01\0B300\drafting\01_0B300\va022.dgn

12-18-12

DIST	COUNTY	ROUTE	POST MILES TOTAL PROJECT	SHEET No.	TOTAL SHEETS
01	DN	101	21.9	38	55

REGISTERED CIVIL ENGINEER — DATE 02-13-15

May 1, 2015
PLANS APPROVAL DATE

REGISTERED PROFESSIONAL ENGINEER — Gabriel J. Galo — No. 52288 — Exp. 12-31-16 — CIVIL — STATE OF CALIFORNIA

The State of California or its officers or agents shall not be responsible for the accuracy or completeness of electronic copies of this plan sheet.

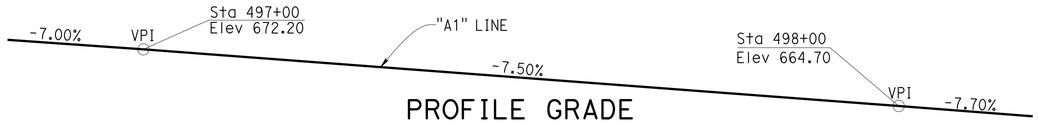

PROFILE GRADE

NO SCALE

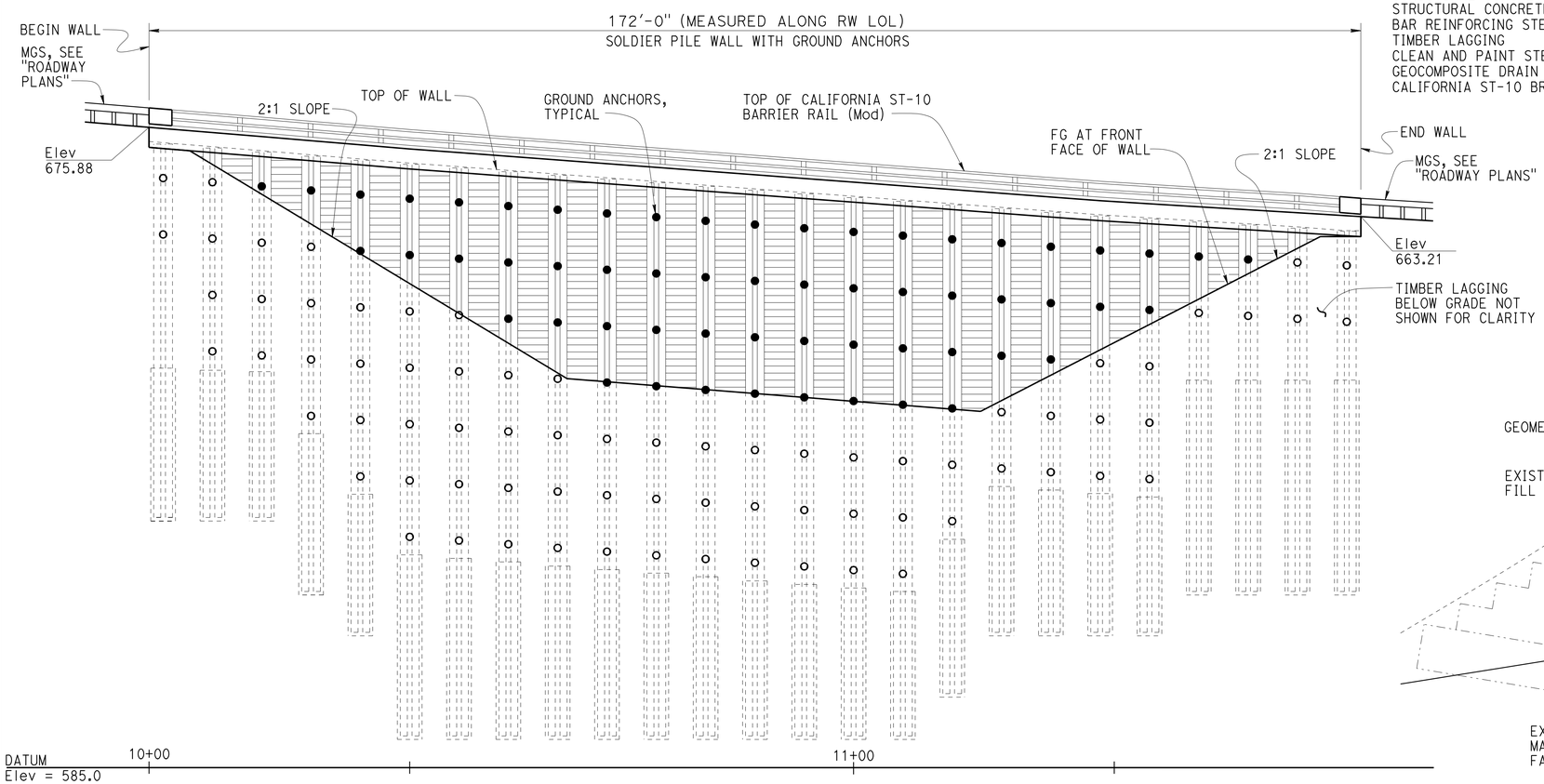

MIRRORED - DEVELOPED ELEVATION

1" = 10'

QUANTITIES

STRUCTURE EXCAVATION (SOLDIER PILE WALL)	445	CY
STRUCTURE BACKFILL (SOLDIER PILE WALL)	578	CY
CONCRETE BACKFILL (SOLDIER PILE WALL)	211	CY
LEAN CONCRETE BACKFILL	127	CY
GROUND ANCHOR (SUBHORIZONTAL)	132	EA
STEEL SOLDIER PILE (HP 12x53)	3,327	LF
42" DRILLED HOLE	950	LF
STRUCTURAL CONCRETE, RETAINING WALL	60	CY
STRUCTURAL CONCRETE, BARRIER SLAB	88	CY
BAR REINFORCING STEEL (RETAINING WALL)	3,915	LB
TIMBER LAGGING	26	MFBM
CLEAN AND PAINT STEEL SOLDIER PILING	LUMP	SUM
GEOCOMPOSITE DRAIN (MODIFIED)	1,200	SQFT
CALIFORNIA ST-10 BRIDGE RAIL (MODIFIED)	172	LF

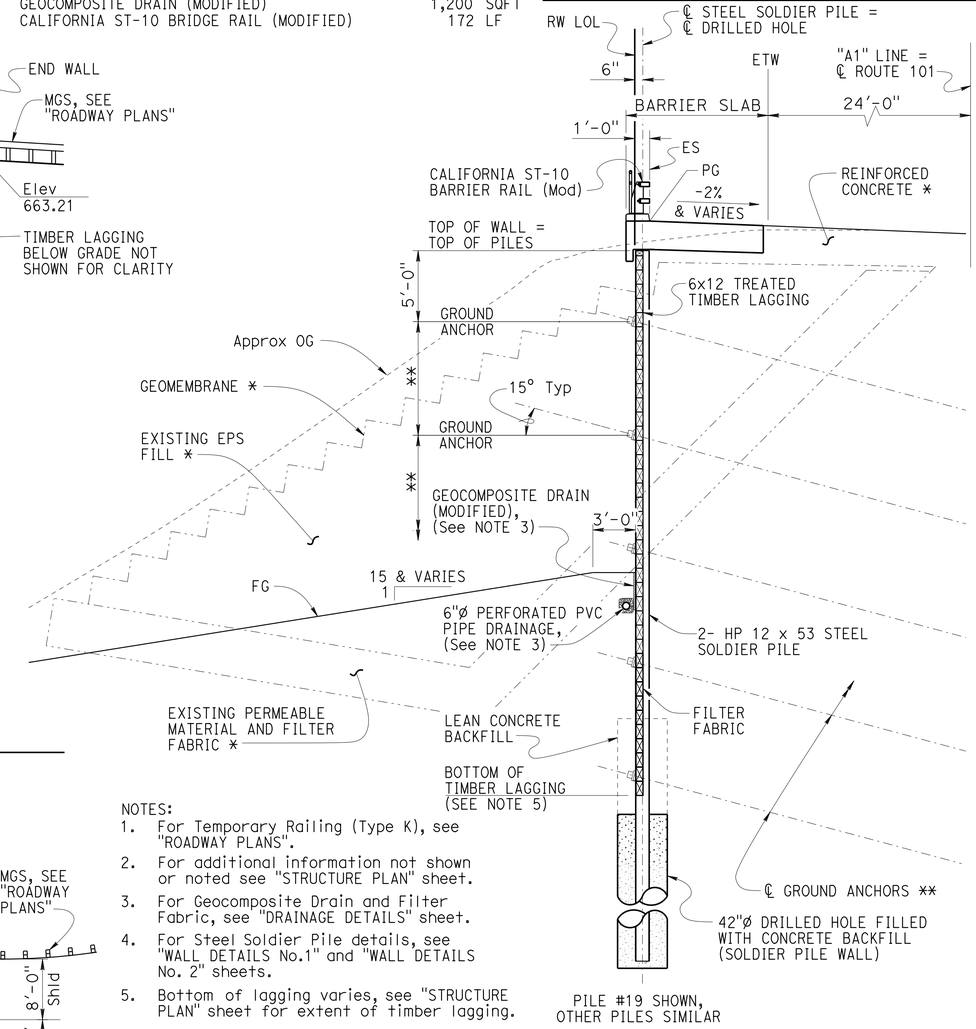

TYPICAL SECTION

3/16" = 1'-0"

NOTES:

1. For Temporary Railing (Type K), see "ROADWAY PLANS".
2. For additional information not shown or noted see "STRUCTURE PLAN" sheet.
3. For Geocomposite Drain and Filter Fabric, see "DRAINAGE DETAILS" sheet.
4. For Steel Soldier Pile details, see "WALL DETAILS No.1" and "WALL DETAILS No. 2" sheets.
5. Bottom of lagging varies, see "STRUCTURE PLAN" sheet for extent of timber lagging.

LEGEND:

- Indicates existing structure
- Indicates new construction
- * Indicates existing elements to be removed, see "ROADWAY PLANS"
- ** For locations and number of Ground Anchors per each Soldier Pile see "SOLDIER PILE DATA TABLE" on "SOLDIER PILE DATA TABLE" sheet.

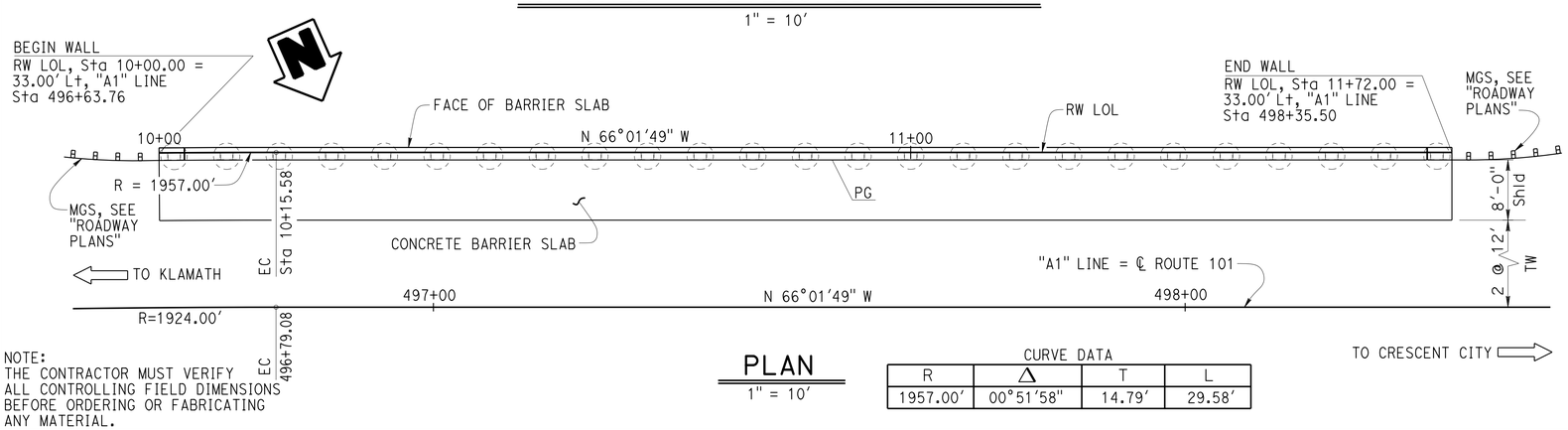

PLAN

1" = 10'

CURVE DATA

R	Δ	T	L
1957.00'	00°51'58"	14.79'	29.58'

NOTE:
THE CONTRACTOR MUST VERIFY ALL CONTROLLING FIELD DIMENSIONS BEFORE ORDERING OR FABRICATING ANY MATERIAL.

Jose Higareda, DESIGN ENGINEER	DESIGN	BY Gabriel Galo	CHECKED Fred Feng	LOAD & RESISTANCE FACTOR DESIGN — LIVE LOADING: 240 psf SURCHARGE
	DETAILS	BY Tim Trefz	CHECKED Fred Feng	LAYOUT: BY Gabriel Galo — CHECKED Fred Feng
	QUANTITIES	BY Tim Trefz	CHECKED Fred Feng	SPECIFICATIONS: BY T. Chen — PLANS AND SPECS COMPARED T. Chen

ORIGINAL SCALE IN INCHES FOR REDUCED PLANS 0 1 2 3

STATE OF CALIFORNIA
DEPARTMENT OF TRANSPORTATION

DIVISION OF ENGINEERING SERVICES
STRUCTURE DESIGN
DESIGN BRANCH 15

BRIDGE NO. 01E0019
POST MILE 21.9-22.0

SOUTH HAMILTON RETAINING WALL
GENERAL PLAN

UNIT: 3604
PROJECT NUMBER & PHASE: 0112000114
CONTRACT NO.: 01-0B300

DISREGARD PRINTS BEARING EARLIER REVISION DATES → 03-18-15 | 01-29-15 | 02-10-15

SHEET 1 OF 18

FILE => za01-0b300-a-gp.dgn

STRUCTURES DESIGN GENERAL PLAN SHEET (ENGLISH) (REV.09-01-10)

DATE PLOTTED => 06-JUL-2015 TIME PLOTTED => 12:02

DIST	COUNTY	ROUTE	POST MILES TOTAL PROJECT	SHEET No.	TOTAL SHEETS
01	DN	101	21.9	39	55

REGISTERED CIVIL ENGINEER — DATE 02-13-15

May 1, 2015
PLANS APPROVAL DATE

REGISTERED PROFESSIONAL ENGINEER — Gabriel J. Galo — No. 52288 — Exp. 12-31-16 — CIVIL — STATE OF CALIFORNIA

The State of California or its officers or agents shall not be responsible for the accuracy or completeness of electronic copies of this plan sheet.

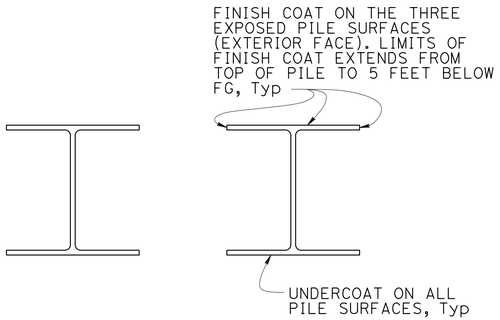

LIMITS OF CLEAN & PAINT STEEL SOLDIER PILE

NO SCALE

GENERAL NOTES
LOAD AND RESISTANCE FACTOR DESIGN

DESIGN:
AASHTO LRFD Bridge Design Specifications, 4th Edition with California Amendments.

LIVE LOAD:
240 psf equivalent to 2 feet level earth surcharge

SOIL PARAMETERS:
(For determination of Design Lateral Earth Pressures)
Backfill soil weight (γ)= 125 lb/ft^3
Friction Angle (ϕ) = 28° C = 0
Active Pressure coefficent, Ka = 0.361
Sedimentary Rock Unit Weight (γ_R)= 130 lb/ft^3
Slope Angle = 0°

STRUCTURAL SHAPE STEEL PILES, (Including Support Plates, Closure Plates, and Bearing Plates):
fy = 50 ksi

STRUCTURAL TIMBER:
Treated Douglas Fir, Grade No. 1 or better.
Timber to be full sawn

REINFORCED CONCRETE:
f'c = 3.6 ksi
fy = 60 ksi
n = 8

PRESTRESSING STEEL (Ground Anchors):
See "SUB HORIZONTAL GROUND ANCHOR DETAILS" sheet.

INDEX TO PLANS

SHEET No.	TITLE
1	GENERAL PLAN
2	INDEX TO PLANS
3	SOLDIER PILE DATA TABLE
4	STRUCTURE PLAN
5	FOUNDATION PLAN
6	EXCAVATION AND BACKFILL DETAILS
7	WALL DETAILS No. 1
8	WALL DETAILS No. 2
9	DRAINAGE DETAILS
10	SUB HORIZONTAL GROUND ANCHOR DETAILS
11	SOLDIER PILE WALL LAGGING DETAILS
12	CONCRETE BARRIER SLAB DETAILS
13	BARRIER RAIL DETAILS No. 1
14	BARRIER RAIL DETAILS No. 2
15	LOG OF TEST BORINGS 1 OF 4
16	LOG OF TEST BORINGS 2 OF 4
17	LOG OF TEST BORINGS 3 OF 4
18	LOG OF TEST BORINGS 4 OF 4

STANDARD PLANS 2010

A10A	ABBREVIATIONS (SHEET 1 OF 2)
RSP A10B	ABBREVIATIONS (SHEET 2 OF 2)
A10C	LINES AND SYMBOLS (SHEET 1 OF 3)
A10D	LINES AND SYMBOLS (SHEET 2 OF 3)
A10E	LINES AND SYMBOLS (SHEET 3 OF 3)
A10F	LEGEND - SOIL (SHEET 1 OF 2)
A10G	LEGEND - SOIL (SHEET 2 OF 2)
A10H	LEGEND - ROCK
RSP B11-68	CALIFORNIA ST-10 BRIDGE RAIL (SHEET 1 OF 3)
B11-69	CALIFORNIA ST-10 BRIDGE RAIL (SHEET 2 OF 3)
RSP B11-70	CALIFORNIA ST-10 BRIDGE RAIL (SHEET 3 OF 3)

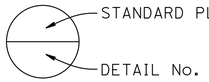

NOTE:
THE CONTRACTOR MUST VERIFY ALL CONTROLLING FIELD DIMENSIONS BEFORE ORDERING OR FABRICATING ANY MATERIAL.

	BY	CHECKED
DESIGN	G. Galo	F. Feng
DETAILS	T. Trefz	F. Feng
QUANTITIES	T. Trefz	F. Feng

STATE OF CALIFORNIA
DEPARTMENT OF TRANSPORTATION

DIVISION OF ENGINEERING SERVICES
STRUCTURE DESIGN
DESIGN BRANCH 15

BRIDGE NO. 01E0019
POST MILE 21.9-22.0

SOUTH HAMILTON RETAINING WALL
INDEX TO PLANS

STRUCTURES DESIGN DETAIL SHEET (ENGLISH) (REV. 09-01-10)

ORIGINAL SCALE IN INCHES FOR REDUCED PLANS 0 1 2 3

UNIT: 3604
PROJECT NUMBER & PHASE: 0112000114
CONTRACT NO.: 01-0B300

DISREGARD PRINTS BEARING EARLIER REVISION DATES

REVISION DATES: 06-17-14 12-25-14 03-18-15

SHEET 2 OF 18

FILE => za01-0b300-a-ltp.dgn

USERNAME => s120115 DATE PLOTTED => 06-JUL-2015 TIME PLOTTED => 12:02

DIST	COUNTY	ROUTE	POST MILES TOTAL PROJECT	SHEET No.	TOTAL SHEETS
01	DN	101	21.9	40	55

REGISTERED CIVIL ENGINEER — DATE 02-13-15

May 1, 2015
PLANS APPROVAL DATE

REGISTERED PROFESSIONAL ENGINEER — Gabriel J. Galo — No. 52288 — Exp. 12-31-16 — CIVIL — STATE OF CALIFORNIA

The State of California or its officers or agents shall not be responsible for the accuracy or completeness of electronic copies of this plan sheet.

SOLDIER PILE DATA TABLE

2- HP12x53 PILES							GROUND ANCHORS																								6x12 TIMBER LAGGING
Pile No.	Station Along RW LOL	Profile Grade Elevation (@ RW LOL) (ft)	PILE LENGTH (ft)	42"Ø DRILLED HOLE			NUMBER OF ANCHORS	ROW 1 *			ROW 2			ROW 3			ROW 4			ROW 5			ROW 6			ROW 7			QUANTITY
				Bottom Elev (ft)	Transition Elev (ft)	TOP Elev (ft)		UL	FTL	LL	UL	FTL	LL	UL	FTL	LL	UL	FTL	LL	UL	FTL	LL	UL	FTL	LL	UL	FTL	LL	
1	10+02.00	675.71	53.00	620.00	641.70		2	45	77	52	35	85	57																32
2	10+09.00	675.14	52.44	620.00	641.40		4	45	138	92	35	120	80	30	133	89	25	129	86										31
3	10+16.00	674.56	51.87	620.00	641.20		4	45	138	92	35	120	80	30	133	89	25	129	86										31
4	10+23.00	673.98	61.78	609.50	632.40	641.10	5	50	149	99	45	130	87	40	145	97	35	145	97	25	112	75							39
5	10+30.00	673.40	67.00	603.70	623.80	641.00	6	55	172	115	47	150	100	42	167	111	37	167	111	27	167	111	20	126	84				45
6	10+37.00	672.81	81.12	589.00	615.20	640.80	7	60	215	144	50	189	127	45	209	140	40	209	140	30	209	140	20	209	140	20	195	131	45
7	10+44.00	672.30	80.61	589.00	614.70	640.20	7	60	215	144	50	189	127	45	209	140	40	209	140	30	209	140	20	209	140	20	195	131	45
8	10+51.00	671.77	80.08	589.00	614.20	639.60	7	60	215	144	50	189	127	45	209	140	40	209	140	30	209	140	20	209	140	20	195	131	44
9	10+58.00	671.25	79.56	589.00	613.60	639.00	7	60	215	144	50	189	127	45	209	140	40	209	140	30	209	140	20	209	140	20	195	131	44
10	10+65.00	670.72	79.03	589.00	613.10	638.30	7	60	215	144	50	189	127	45	209	140	40	209	140	30	209	140	20	209	140	20	195	131	43
11	10+72.00	670.20	78.51	589.00	612.60	637.40	7	60	215	144	50	189	127	45	209	140	40	209	140	30	209	140	20	209	140	20	195	131	43
12	10+79.00	669.67	78.98	589.00	612.10	636.60	7	60	215	144	50	189	127	45	209	140	40	209	140	30	209	140	20	209	140	20	195	131	42
13	10+86.00	669.15	77.46	589.00	611.50	635.70	7	60	215	144	50	189	127	45	209	140	40	209	140	30	209	140	20	209	140	20	195	131	42
14	10+93.00	668.62	76.93	589.00	611.00	635.40	7	60	215	144	50	189	127	45	209	140	40	209	140	30	209	140	20	209	140	20	195	131	41
15	11+00.00	668.10	76.41	589.00	610.50	635.30	7	60	215	144	50	189	127	45	209	140	40	209	140	30	209	140	20	209	140	20	195	131	41
16	11+07.00	667.57	75.88	589.00	610.00	635.10	7	60	215	144	50	189	127	45	209	140	40	209	140	30	209	140	20	209	140	20	195	131	40
17	11+14.00	667.05	69.36	595.00	617.40	634.90	6	55	172	115	47	150	100	42	167	111	37	167	111	27	167	111	20	126	84				40
18	11+21.00	666.52	60.13	603.70	624.90	634.40	5	50	158	106	45	138	92	40	153	103	35	153	103	25	136	91							39
19	11+28.00	665.99	59.60	603.70	624.40	634.00	5	50	158	106	45	138	92	40	153	103	35	153	103	25	136	91							39
20	11+35.00	665.47	59.10	603.70	623.90	633.60	5	50	158	106	45	138	92	40	153	103	35	153	103	25	136	91							38
21	11+42.00	665.03	58.66	603.70	623.40	633.00	5	50	158	106	45	138	92	40	153	103	35	153	103	25	136	91							23
22	11+49.00	664.60	52.43	609.50	640.00		2	35	110	73	30	123	82																22
23	11+56.00	664.18	52.00	609.50	640.00		2	35	110	73	30	123	82																22
24	11+63.00	663.76	51.56	609.50	640.00		2	35	82	55	30	100	67																21
25	11+70.00	663.33	51.13	609.50	640.00		2	35	82	55	30	100	67																

NOTES:
1. See SOLDIER PILE DATA TABLE for elevations.
2. UL: Unbonded Length, (ft) Distance from pile along anchor tendon inclined at 15° from horizontal.
   FTL: Factored Test Load on ground anchor (kip)
   LL: Lock-Off Load (kip)

LEGEND:
- Indicates reinforced Concrete between HP Piles
- Indicates Lean Concrete backfill in drilled hole
- * Row No. begins numerically from top of wall progessing downward.

NOTE:
THE CONTRACTOR MUST VERIFY ALL CONTROLLING FIELD DIMENSIONS BEFORE ORDERING OR FABRICATING ANY MATERIAL.

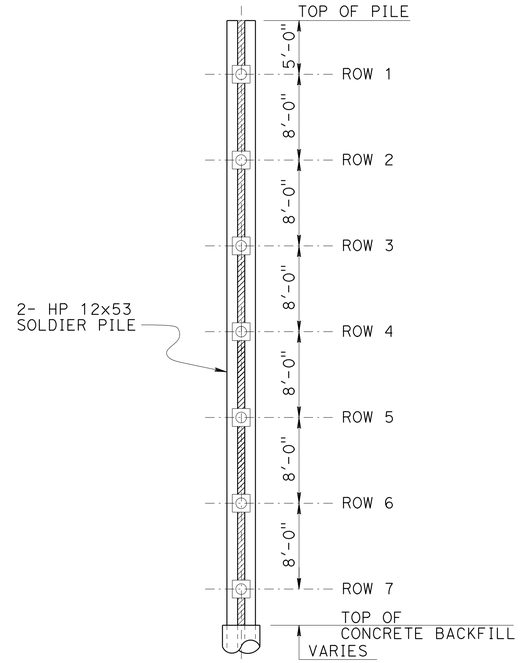

GROUND ANCHOR ELEVATION
NO SCALE

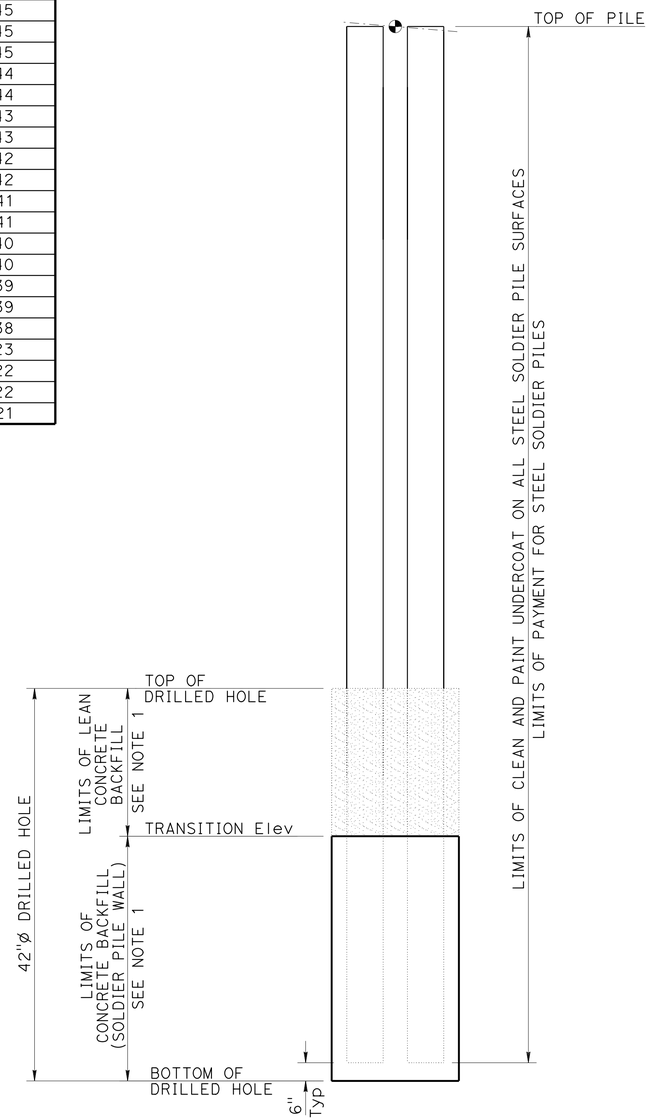

PILE ELEVATION
NO SCALE

	BY	CHECKED
DESIGN	G. Galo	F. Feng
DETAILS	T. Trefz	F. Feng
QUANTITIES	T. Trefz	F. Feng

STATE OF CALIFORNIA
DEPARTMENT OF TRANSPORTATION

DIVISION OF ENGINEERING SERVICES
STRUCTURE DESIGN
DESIGN BRANCH 15

BRIDGE NO. 01E0019
POST MILE 21.9-22.0

SOUTH HAMILTON RETAINING WALL
SOLDIER PILE DATA TABLE

STRUCTURES DESIGN DETAIL SHEET (ENGLISH) (REV. 09-01-10)

ORIGINAL SCALE IN INCHES FOR REDUCED PLANS 0 1 2 3

UNIT: 3604
PROJECT NUMBER & PHASE: 0112000114
CONTRACT NO.: 01-0B300

DISREGARD PRINTS BEARING EARLIER REVISION DATES

REVISION DATES 12-15-14 02-04-15 02-10-15

SHEET 3 OF 18

FILE => za01-0b300-a-spdt.dgn

USERNAME => s120115 DATE PLOTTED => 06-JUL-2015 TIME PLOTTED => 12:02

DIST	COUNTY	ROUTE	POST MILES TOTAL PROJECT	SHEET No.	TOTAL SHEETS
01	DN	101	21.9	41	55

REGISTERED CIVIL ENGINEER — DATE 02-13-15

May 1, 2015
PLANS APPROVAL DATE

REGISTERED PROFESSIONAL ENGINEER — Gabriel J. Galo — No. 52288 — Exp. 12-31-16 — CIVIL — STATE OF CALIFORNIA

The State of California or its officers or agents shall not be responsible for the accuracy or completeness of electronic copies of this plan sheet.

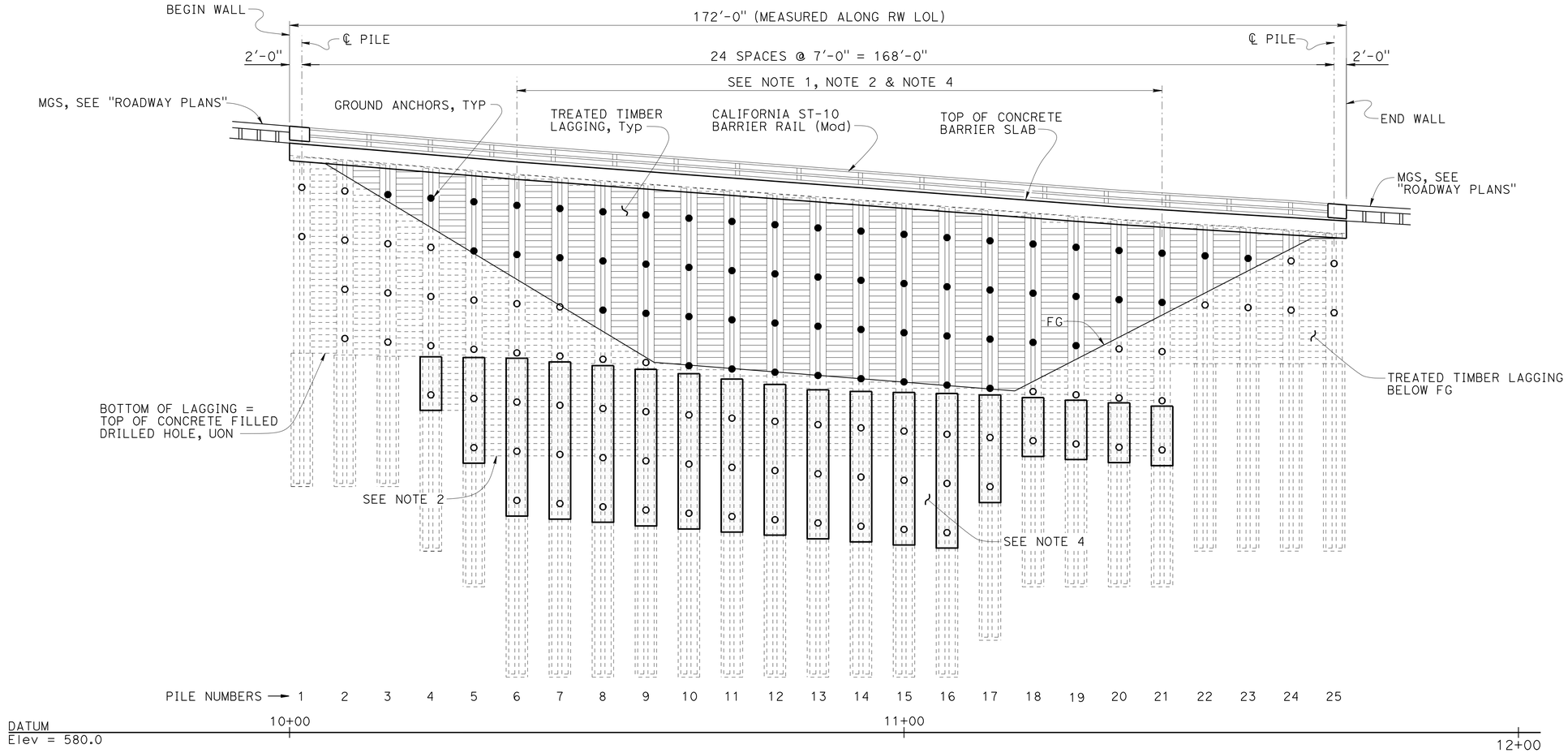

MIRRORED - DEVELOPED ELEVATION

1" = 10'

LEGEND:

- ▯ Indicates 42" Dia Drilled Holes filled with Lean Concrete Backfill.
- ● Indicates Ground Anchors installed above Finish Grade.
- ○ Indicates Ground Anchors installed below Finish Grade.

NOTES:

1. Pile #4 to #21 are to be partially backfilled with Lean Concrete. For additional information see "SOLDIER PILE DATA TABLE" sheet and "SECTION C-C" on "WALL DETAILS No. 1" sheet.
2. Bottom of timber lagging between Pile #6 to #21 = Elev 625.00'
3. For Drainage information, see "DRAINAGE DETAILS" sheet.
4. Timber lagging for use in temporary shoring may be installed between HP Piles below elevations shown for permanent lagging, however must be removed prior to final backfill.

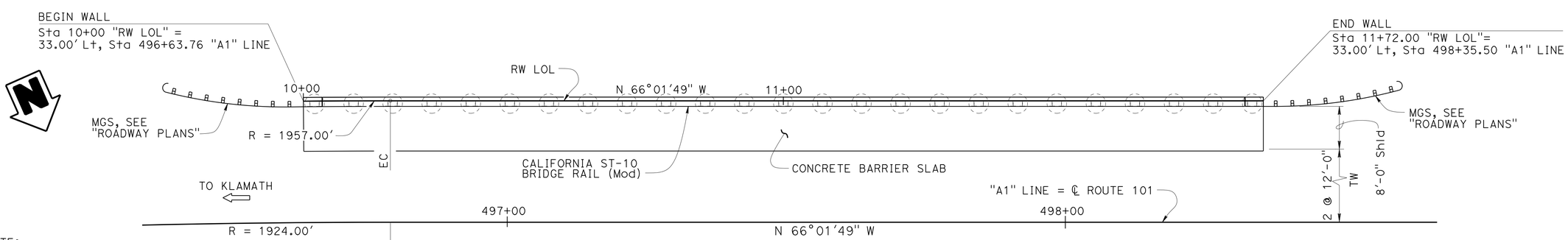

PLAN

1" = 10'

NOTE:
THE CONTRACTOR MUST VERIFY ALL CONTROLLING FIELD DIMENSIONS BEFORE ORDERING OR FABRICATING ANY MATERIAL.

	BY	CHECKED
DESIGN	G. Galo	F. Feng
DETAILS	T. Trefz	F. Feng
QUANTITIES	T. Trefz	F. Feng

STATE OF CALIFORNIA
DEPARTMENT OF TRANSPORTATION

DIVISION OF ENGINEERING SERVICES
STRUCTURE DESIGN
DESIGN BRANCH 15

BRIDGE NO. 01E0019
POST MILE 21.9-22.0

SOUTH HAMILTON RETAINING WALL
STRUCTURE PLAN

STRUCTURES DESIGN DETAIL SHEET (ENGLISH) (REV. 09-01-10)

ORIGINAL SCALE IN INCHES FOR REDUCED PLANS 0 1 2 3

UNIT: 3604
PROJECT NUMBER & PHASE: 0112000114
CONTRACT NO.: 01-0B300

DISREGARD PRINTS BEARING EARLIER REVISION DATES

REVISION DATES: 02-10-15 | 12-12-14 | 02-04-15

SHEET 4 OF 18

FILE => za01-0b300-c-sp.dgn

USERNAME => s120115 DATE PLOTTED => 06-JUL-2015 TIME PLOTTED => 12:02

DIST	COUNTY	ROUTE	POST MILES TOTAL PROJECT	SHEET No.	TOTAL SHEETS
01	DN	101	21.9	42	55

REGISTERED CIVIL ENGINEER — DATE 02-13-15

May 1, 2015
PLANS APPROVAL DATE

REGISTERED PROFESSIONAL ENGINEER — Gabriel J. Galo — No. 52288 — Exp. 12-31-16 — CIVIL — STATE OF CALIFORNIA

The State of California or its officers or agents shall not be responsible for the accuracy or completeness of electronic copies of this plan sheet.

CURVE DATA

No. ⊕	R	Δ	T	L
1	1924.00′	07°31′48"	126.61′	252.86′
W1	1957.00′	00°51′58"	14.79′	29.58′

SURVEY CONTROL

DN 101 PM21.90 (NOT SHOWN ON PLAN)
Fnd CalTrans ALCAR STAMPED: "PC 21.90"
35.89 Ft Lt Rte 101
Sta 494+49.888
N 2,514,679.12
E 5,979,246.64
Elev = 689.01

DN 101 PM22.00 (NOT SHOWN ON PLAN)
Fnd CalTrans ALCAR, STAMPED: "DN-101-22.00"
31.50 Ft Lt Rte 101
Sta 500+15.41
N 2,514,925.03
E 5,978,723.31
Elev = 650.47

NOTE:
All Utilities as per District Utility Layout.

LEGEND:
Denotes Location of new 42"Ø Soldier Piles
Denotes Location of existing EPS retaining system. See "ROADWAY PLANS" for extent of removal.

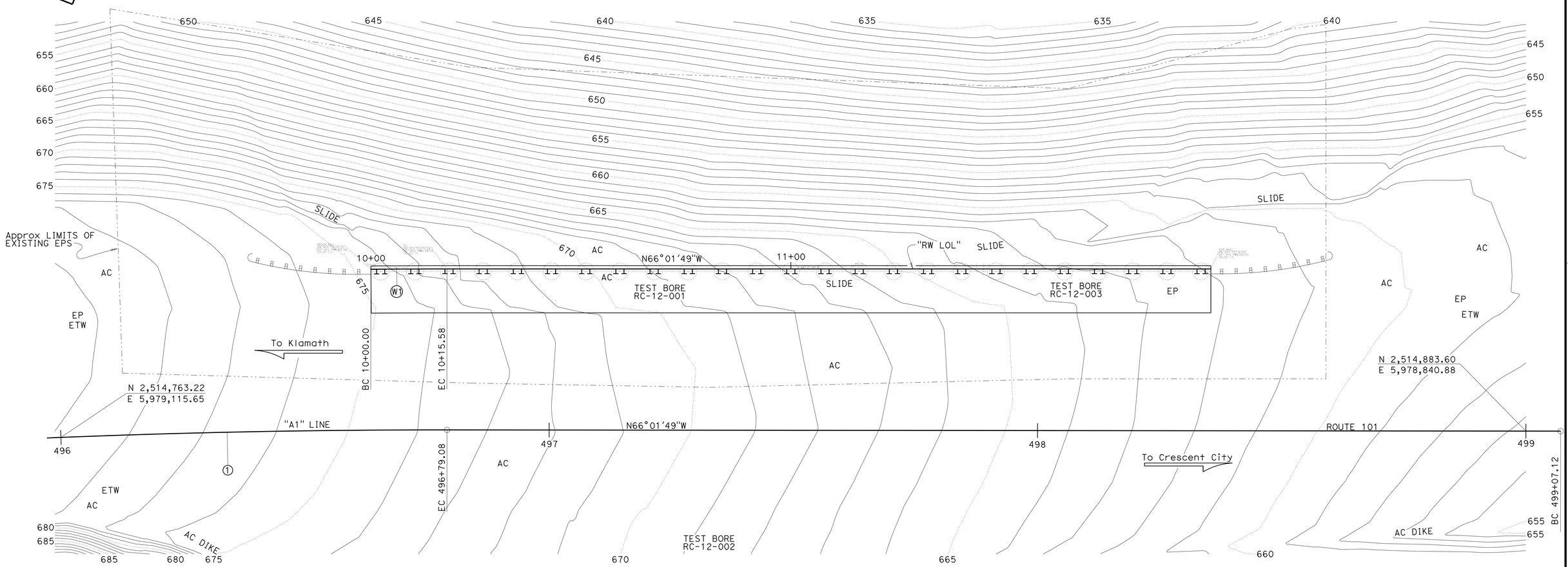

NOTE:
THE CONTRACTOR MUST VERIFY ALL CONTROLLING FIELD DIMENSIONS BEFORE ORDERING OR FABRICATING ANY MATERIAL.

PRELIMINARY INVESTIGATION SECTION					
SCALE 1"=10′	VERT.DATUM NAVD88	PHOTOGRAMMETRY AS OF: X			
	HORZ.DATUM NAD83 (2004.69)	SURVEYED	BY DISTRICT	CHECKED	BY C. FASSETT 03-2014
	ALIGNMENT TIES Dist TRAVERSE SHEET	DRAFTED	BY T. ZOLNIKOV 03-2014	CHECKED	BY L. LEW 03-2014

DESIGN	BY G. Galo	CHECKED F. Feng
DETAILS	BY T. Trefz	CHECKED F. Feng
QUANTITIES	BY T. Trefz	CHECKED F. Feng

STATE OF CALIFORNIA
DEPARTMENT OF TRANSPORTATION

DIVISION OF ENGINEERING SERVICES
STRUCTURE DESIGN
DESIGN BRANCH 15

BRIDGE NO. 01E0019
POST MILE 21.9-22.0

SOUTH HAMILTON RETAINING WALL
FOUNDATION PLAN

STRUCTURES FOUNDATION PLAN SHEET (ENGLISH) (REV. 09-01-10)

ORIGINAL SCALE IN INCHES FOR REDUCED PLANS 0 1 2 3

UNIT: 3604
PROJECT NUMBER & PHASE: 0112000114
CONTRACT NO.: 01-0B300

DISREGARD PRINTS BEARING EARLIER REVISION DATES

REVISION DATES 03/07/14

SHEET 5 OF 18

FILE => za01-0b300-e-fp.dgn

USERNAME => s120115 DATE PLOTTED => 06-JUL-2015 TIME PLOTTED => 12:03

DIST	COUNTY	ROUTE	POST MILES TOTAL PROJECT	SHEET No.	TOTAL SHEETS
01	DN	101	21.9	43	55

REGISTERED CIVIL ENGINEER — DATE 02-13-15

May 1, 2015
PLANS APPROVAL DATE

REGISTERED PROFESSIONAL ENGINEER — Gabriel J. Galo — No. 52288 — Exp. 12-31-16 — CIVIL — STATE OF CALIFORNIA

The State of California or its officers or agents shall not be responsible for the accuracy or completeness of electronic copies of this plan sheet.

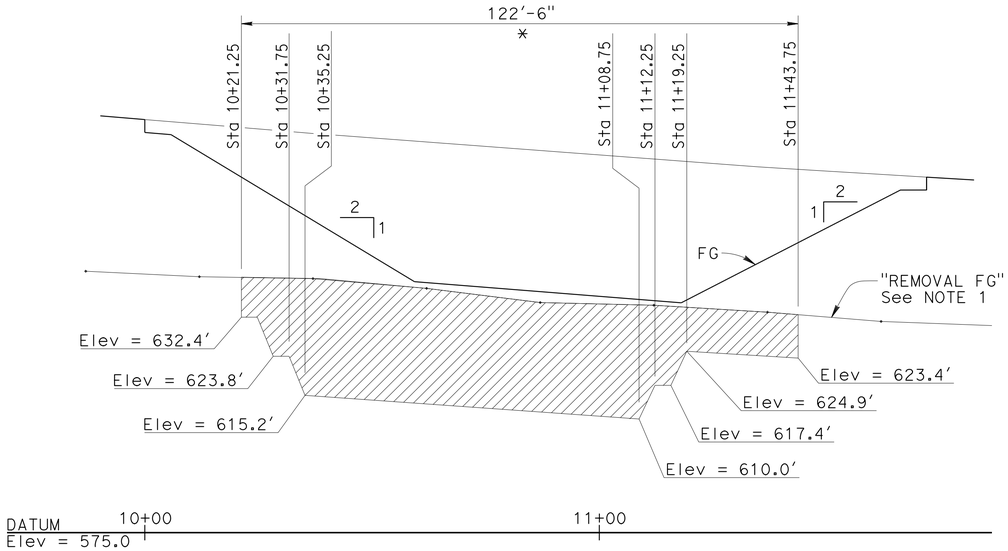

STRUCTURE EXCAVATION
MIRRORED - DEVELOPED ELEVATION

NO SCALE

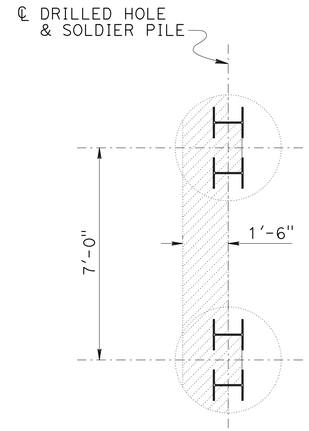

SECTION A-A

NO SCALE

NOTES:

1. "Removal FG" indicates the original ground after removal of existing Geomembrane, EPS blocks and Permeable Material. See "ROADWAY PLANS".

LEGEND:

- Indicates limits of Structure Excavation (Soldier Pile Wall)
- Indicates limits of Structure Backfill (Soldier Pile Wall)
- * Length of Structure Excavation

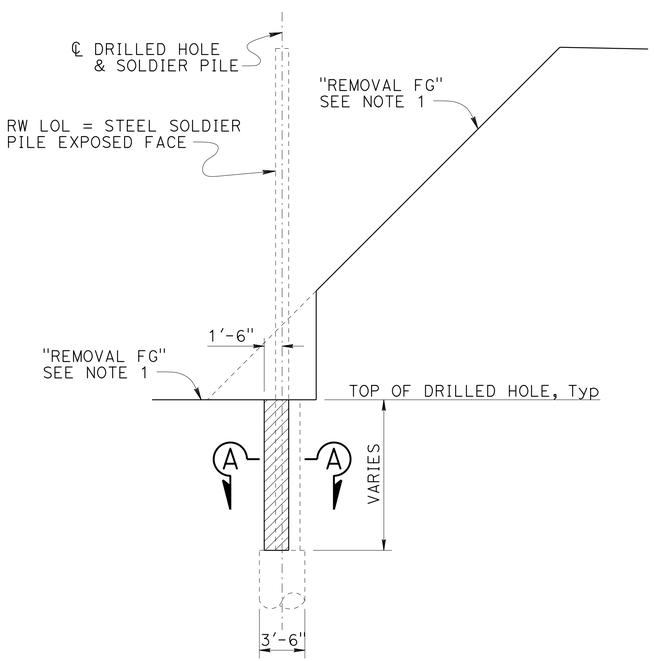

AT PILES

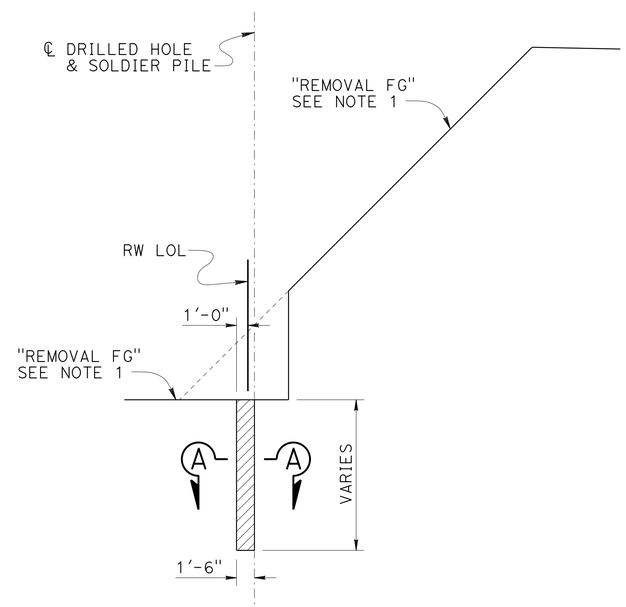

BETWEEN PILES

NOTE:
THE CONTRACTOR MUST VERIFY ALL CONTROLLING FIELD DIMENSIONS BEFORE ORDERING OR FABRICATING ANY MATERIAL.

STRUCTURE EXCAVATION

NO SCALE

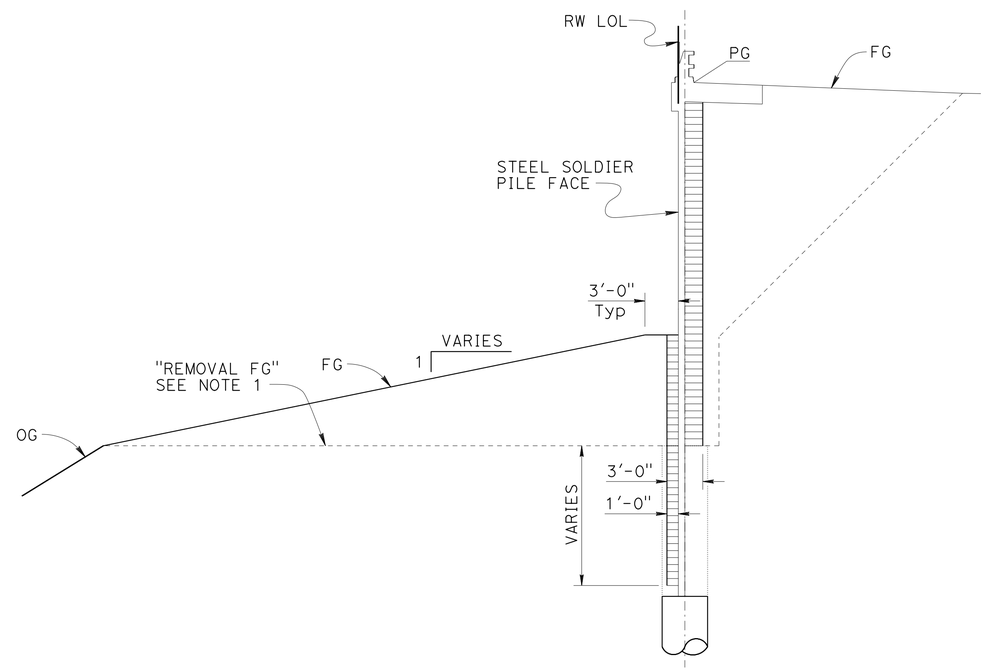

STRUCTURE BACKFILL

NO SCALE

DESIGN	BY G. Galo	CHECKED F. Feng	
DETAILS	BY T. Trefz	CHECKED F. Feng	
QUANTITIES	BY T. Trefz	CHECKED F. Feng	

STATE OF CALIFORNIA
DEPARTMENT OF TRANSPORTATION

DIVISION OF ENGINEERING SERVICES
STRUCTURE DESIGN
DESIGN BRANCH 15

BRIDGE NO. 01E0019
POST MILE 21.9-22.0

SOUTH HAMILTON RETAINING WALL
EXCAVATION AND BACKFILL DETAILS

STRUCTURES DESIGN DETAIL SHEET (ENGLISH) (REV. 09-01-10)

ORIGINAL SCALE IN INCHES FOR REDUCED PLANS 0 1 2 3

UNIT: 3604
PROJECT NUMBER & PHASE: 0112000114
CONTRACT NO.: 01-0B300

DISREGARD PRINTS BEARING EARLIER REVISION DATES

REVISION DATES 10-03-14 12-26-14 02-10-15

SHEET 6 OF 18

FILE => za01-0b300-f-ex-bf_dtl.dgn

USERNAME => s120175 DATE PLOTTED => 06-JUL-2015 TIME PLOTTED => 12:03

DIST	COUNTY	ROUTE	POST MILES TOTAL PROJECT	SHEET No.	TOTAL SHEETS
01	DN	101	21.9	44	55

REGISTERED CIVIL ENGINEER — DATE 02-13-15

May 1, 2015
PLANS APPROVAL DATE

REGISTERED PROFESSIONAL ENGINEER — Gabriel J. Galo No. 52288 Exp. 12-31-16 CIVIL — STATE OF CALIFORNIA

The State of California or its officers or agents shall not be responsible for the accuracy or completeness of electronic copies of this plan sheet.

NOTES:

1. Removal FG indicates the orginal ground after removal of existing Geomembrane, E.P.S. Blocks and Permeable material. See "ROADWAY PLANS"

LEGEND:

- Indicates Structural Concrete, Retaining Wall
- Indicates Concrete Backfill (Soldier Pile Wall)
- Indicates Lean Concrete backfill
- Indicates Lean Concrete removed

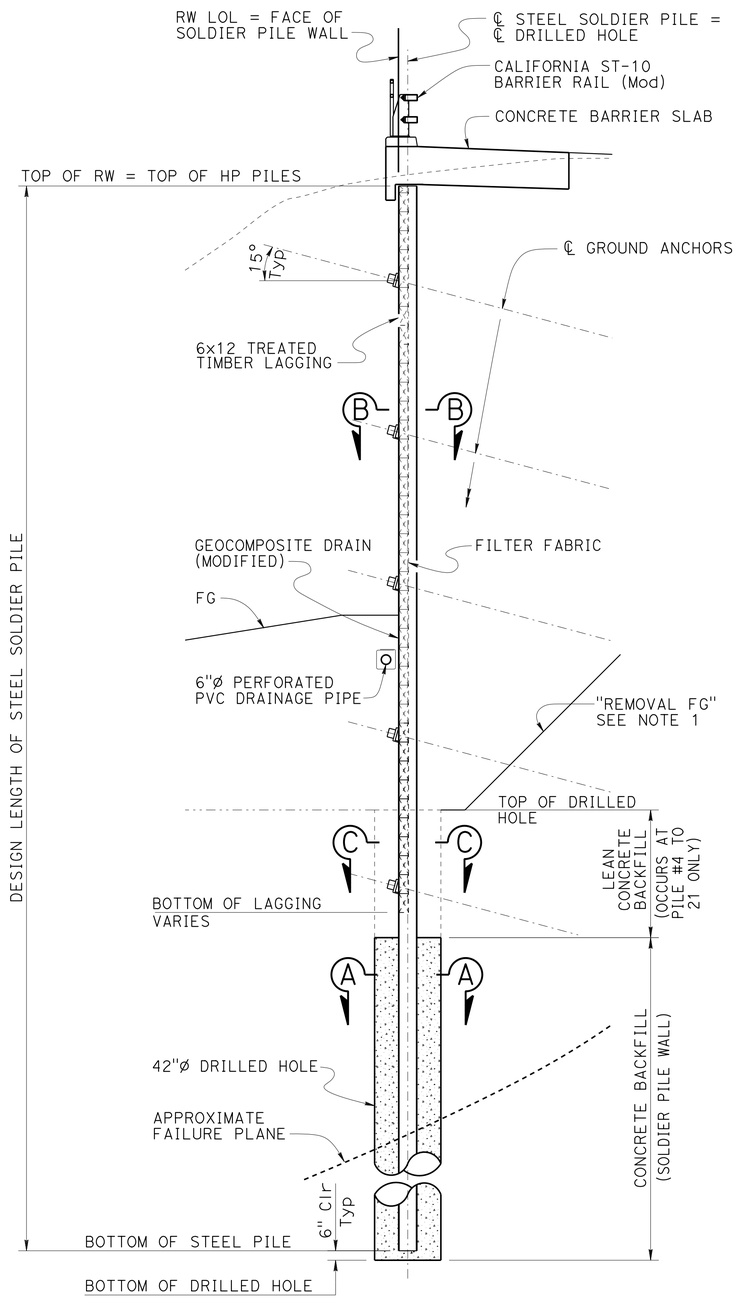

TYPICAL SECTION

1/4" = 1'-0"

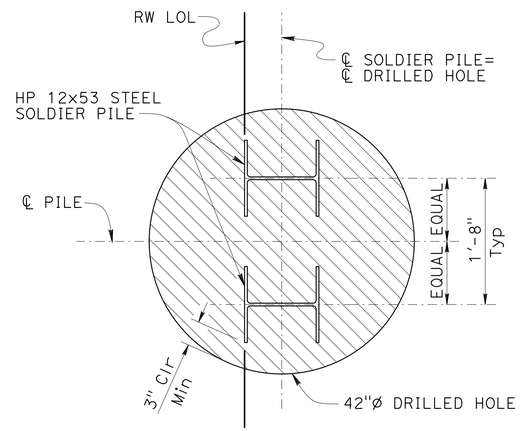

SECTION A-A

1" = 1'-0"

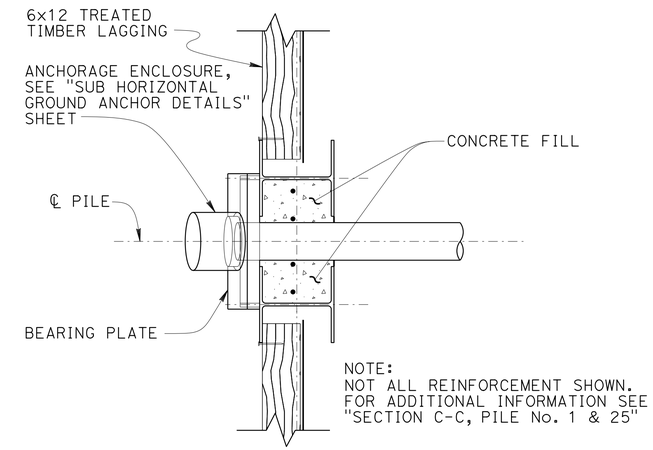

GROUND ANCHOR

SECTION B-B

1" = 1'-0"

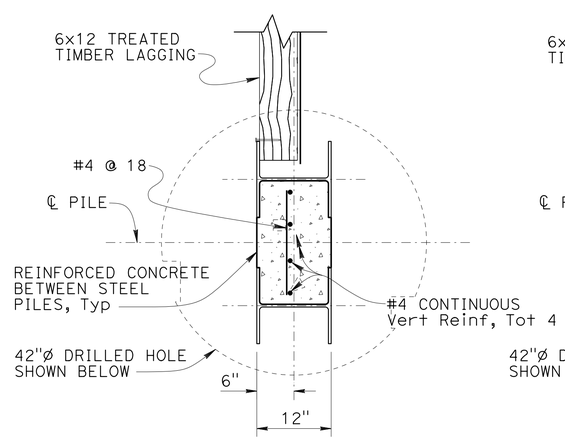

PILE No. 1 & 25

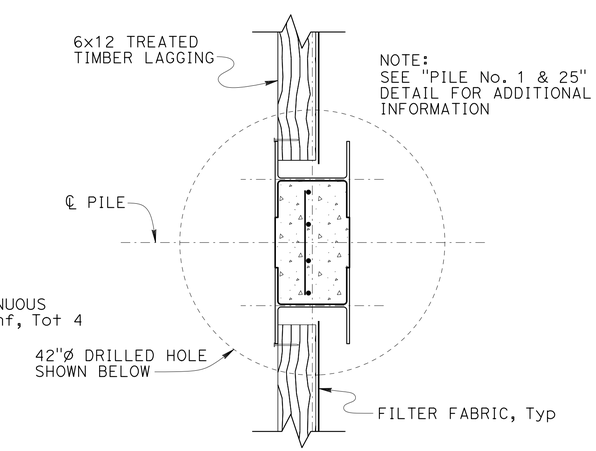

PILE No. 2 TO 3 & 22 TO 24

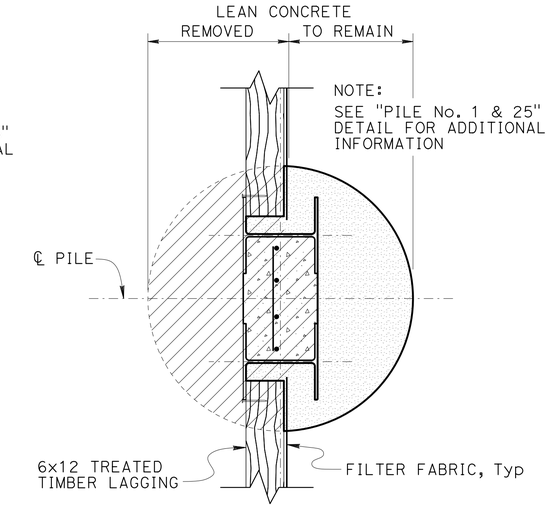

PILE No. 4 TO 21

SECTION C-C

1" = 1'-0"

NOTE:
THE CONTRACTOR MUST VERIFY ALL CONTROLLING FIELD DIMENSIONS BEFORE ORDERING OR FABRICATING ANY MATERIAL.

	BY	CHECKED
DESIGN	G. Galo	F. Feng
DETAILS	T. Trefz	F. Feng
QUANTITIES	T. Trefz	F. Feng

STATE OF CALIFORNIA
DEPARTMENT OF TRANSPORTATION

DIVISION OF ENGINEERING SERVICES
STRUCTURE DESIGN
DESIGN BRANCH 15

BRIDGE NO. 01E0019
POST MILE 21.9-22.0

SOUTH HAMILTON RETAINING WALL
WALL DETAILS No. 1

STRUCTURES DESIGN DETAIL SHEET (ENGLISH) (REV. 09-01-10)

ORIGINAL SCALE IN INCHES FOR REDUCED PLANS 0 1 2 3

UNIT: 3604
PROJECT NUMBER & PHASE: 0112000114
CONTRACT NO.: 01-0B300

DISREGARD PRINTS BEARING EARLIER REVISION DATES

REVISION DATES: 08-29-14 02-04-15 02-10-15

SHEET 7 OF 18

FILE => za01-0b300-g-rwdtl_01.dgn

USERNAME => s120115 DATE PLOTTED => 06-JUL-2015 TIME PLOTTED => 12:03

DIST	COUNTY	ROUTE	POST MILES TOTAL PROJECT	SHEET No.	TOTAL SHEETS
01	DN	101	21.9	45	55

REGISTERED CIVIL ENGINEER — DATE 02-13-15

May 1, 2015
PLANS APPROVAL DATE

REGISTERED PROFESSIONAL ENGINEER — Gabriel J. Galo — No. 52288 — Exp. 12-31-16 — CIVIL — STATE OF CALIFORNIA

The State of California or its officers or agents shall not be responsible for the accuracy or completeness of electronic copies of this plan sheet.

NOTES:
1. Stay plates shall be installed prior to placement of Steel Soldier Piles in drilled holes.
2. Design of support plates to be determined by contractor.
3. Support and Closure plates to receive same undercoat and finish coat treatment as Soldier Piles.

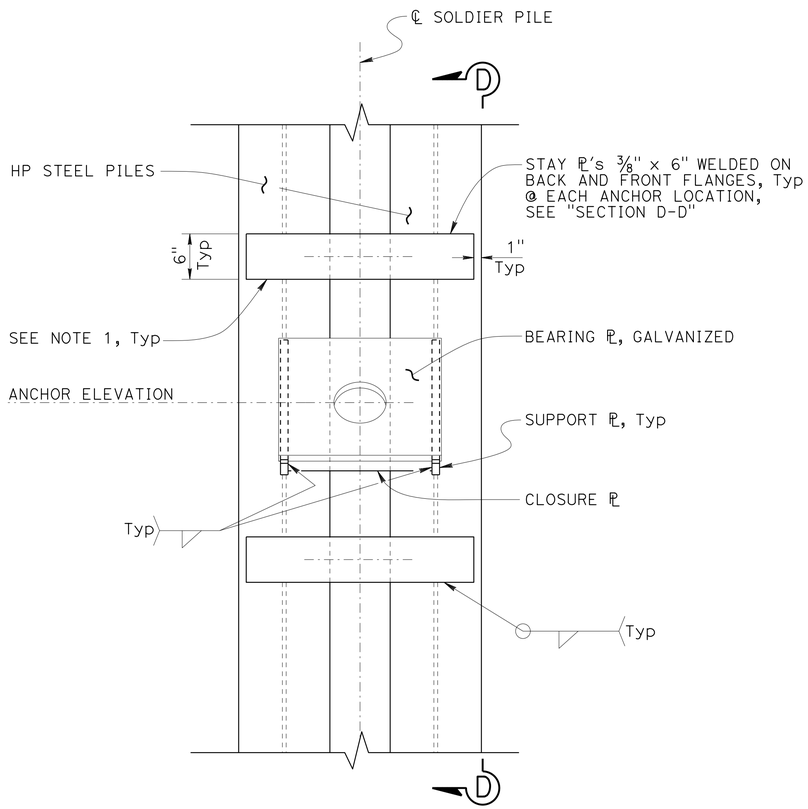

GROUND ANCHOR
TYPICAL PART ELEVATION
NO SCALE

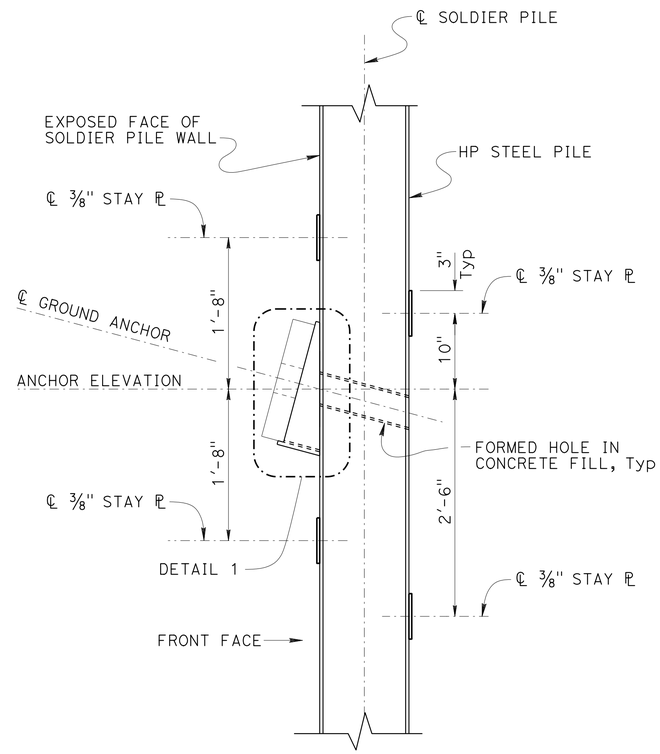

SECTION D-D
NO SCALE

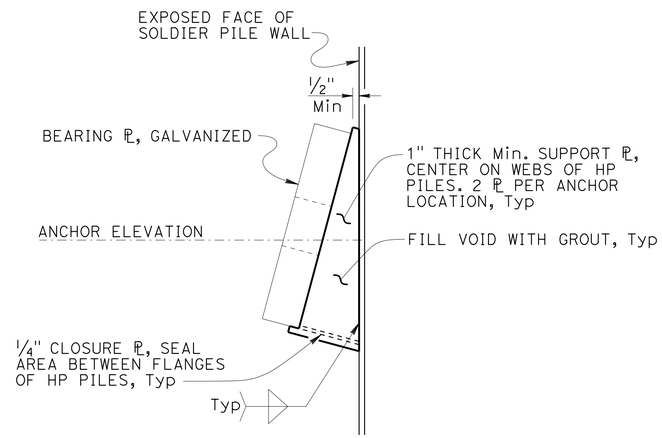

DETAIL 1
PART OF ANCHORAGE ASSEMBLY
NO SCALE

NOTE:
THE CONTRACTOR MUST VERIFY ALL CONTROLLING FIELD DIMENSIONS BEFORE ORDERING OR FABRICATING ANY MATERIAL.

	BY	CHECKED
DESIGN	G. Galo	F. Feng
DETAILS	T. Trefz	F. Feng
QUANTITIES	T. Trefz	F. Feng

STATE OF CALIFORNIA
DEPARTMENT OF TRANSPORTATION

DIVISION OF ENGINEERING SERVICES
STRUCTURE DESIGN
DESIGN BRANCH 15

BRIDGE NO. 01E0019
POST MILE 21.9-22.0

SOUTH HAMILTON RETAINING WALL
WALL DETAILS No. 2

STRUCTURES DESIGN DETAIL SHEET (ENGLISH) (REV. 09-01-10)

ORIGINAL SCALE IN INCHES FOR REDUCED PLANS 0 1 2 3

UNIT: 3604
PROJECT NUMBER & PHASE: 0112000114
CONTRACT NO.: 01-0B300

DISREGARD PRINTS BEARING EARLIER REVISION DATES

REVISION DATES: 03-18-15 | 12-17-14 | 02-04-15

SHEET 8 OF 18

FILE => za01-0b300-g-rwdtl_02.dgn

USERNAME => s120115 DATE PLOTTED => 06-JUL-2015 TIME PLOTTED => 12:03

DIST	COUNTY	ROUTE	POST MILES TOTAL PROJECT	SHEET No.	TOTAL SHEETS
01	DN	101	21.9	46	55

REGISTERED CIVIL ENGINEER — DATE 02-13-15

May 1, 2015
PLANS APPROVAL DATE

REGISTERED PROFESSIONAL ENGINEER — Gabriel J. Galo — No. 52288 — Exp. 12-31-16 — CIVIL — STATE OF CALIFORNIA

The State of California or its officers or agents shall not be responsible for the accuracy or completeness of electronic copies of this plan sheet.

NOTE:
1. Drainage System No. 1 and No. 2 are seperated by 1'-6" from ℄ to ℄ at both drainage outlets.
2. Attach double sided Geocomposite Drain (Modified) with hot dip galvanized nails Min 8d and as approved by the Engineer.
3. For drainage outlet details see "ROADWAY PLANS"

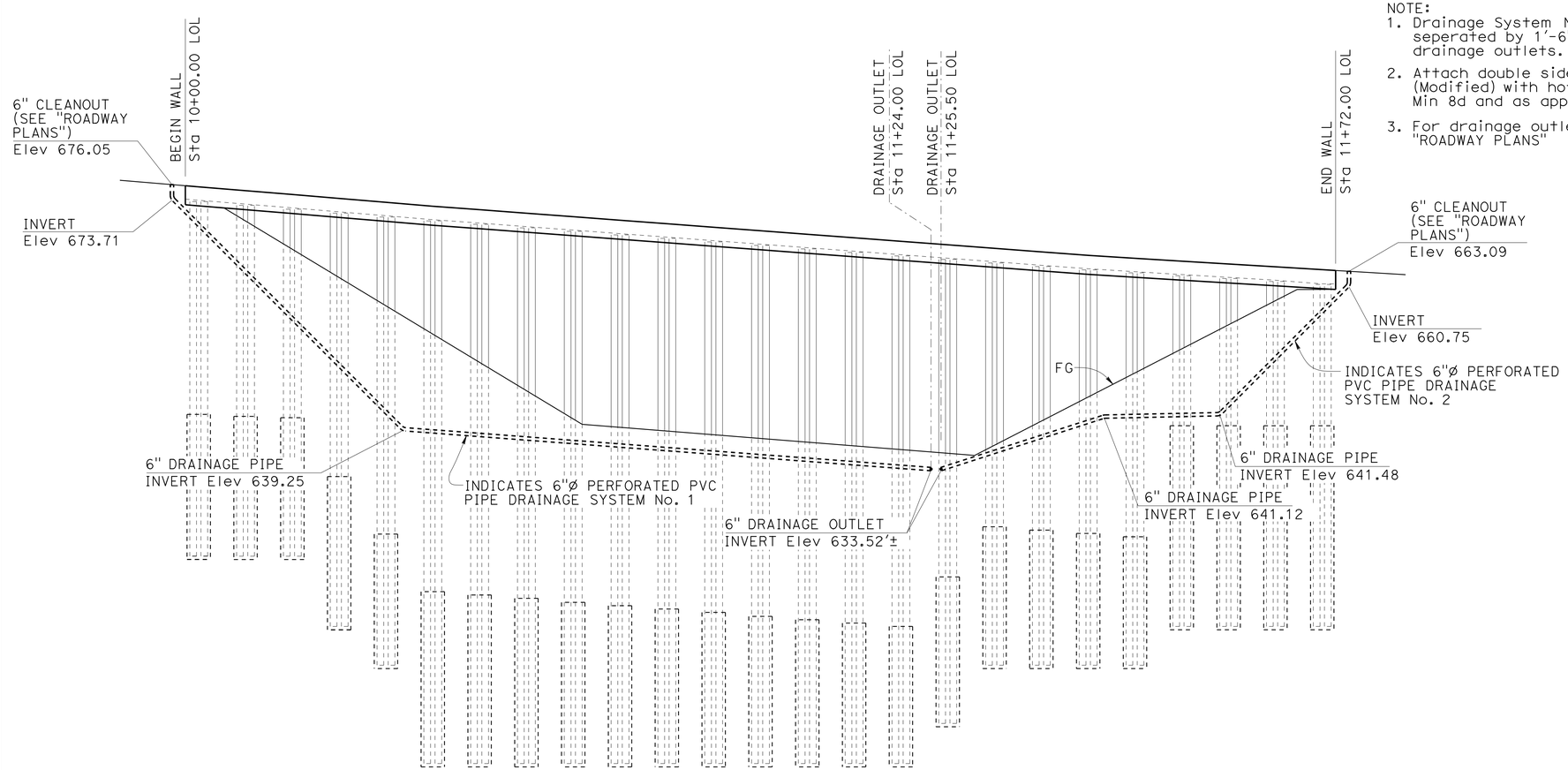

MIRRORED - DRAINAGE ELEVATION
1" = 10'

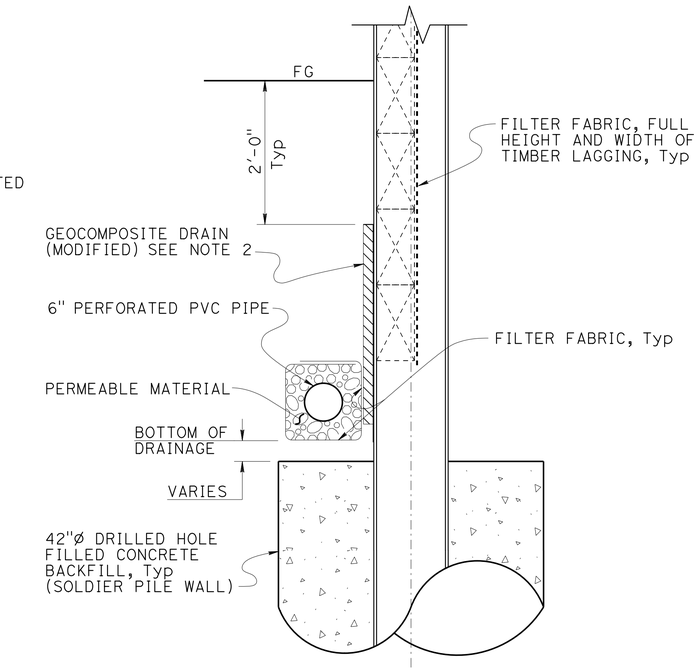

DETAIL A
1" = 1'-0"

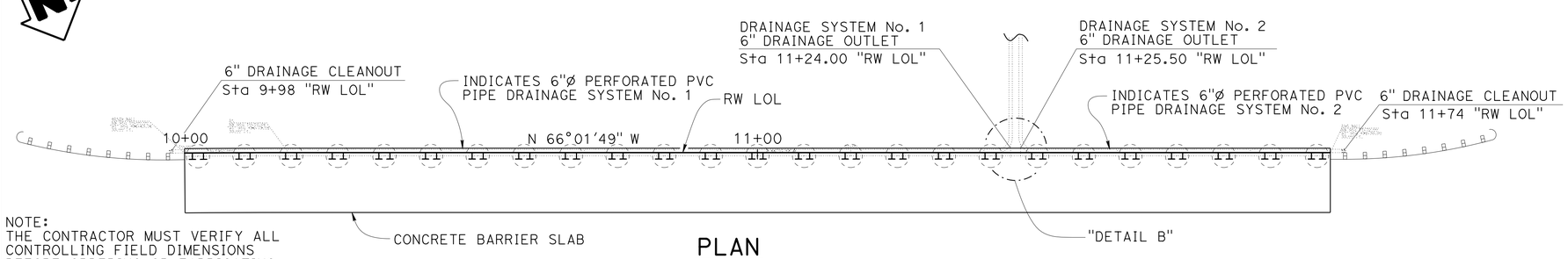

PLAN
1" = 10'

NOTE:
THE CONTRACTOR MUST VERIFY ALL CONTROLLING FIELD DIMENSIONS BEFORE ORDERING OR FABRICATING ANY MATERIAL.

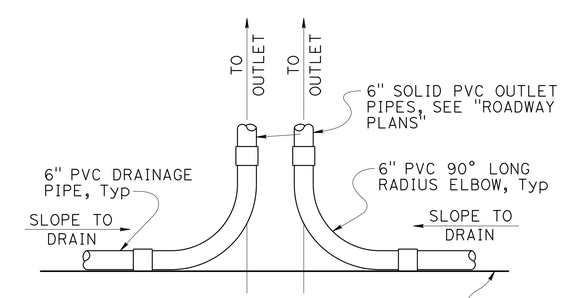

DETAIL B
1" = 1'-0"

DESIGN	BY G. Galo	CHECKED F. Feng	
DETAILS	BY T. Trefz	CHECKED F. Feng	
QUANTITIES	BY T. Trefz	CHECKED F. Feng	

STATE OF CALIFORNIA
DEPARTMENT OF TRANSPORTATION

DIVISION OF ENGINEERING SERVICES
STRUCTURE DESIGN
DESIGN BRANCH 15

BRIDGE NO. 01E0019
POST MILE 21.9-22.0

SOUTH HAMILTON RETAINING WALL
DRAINAGE DETAILS

STRUCTURES DESIGN DETAIL SHEET (ENGLISH) (REV. 09-01-10)

ORIGINAL SCALE IN INCHES FOR REDUCED PLANS 0 1 2 3

UNIT: 3604
PROJECT NUMBER & PHASE: 0112000114
CONTRACT NO.: 01-0B300

DISREGARD PRINTS BEARING EARLIER REVISION DATES

REVISION DATES: 12-18-14 12-18-14 02-04-15

SHEET 9 OF 18

FILE => za01-0b300-r-drndtl.dgn

USERNAME => s120115 DATE PLOTTED => 06-JUL-2015 TIME PLOTTED => 12:03

DIST	COUNTY	ROUTE	POST MILES TOTAL PROJECT	SHEET No.	TOTAL SHEETS
01	DN	101	21.9	47	55

REGISTERED CIVIL ENGINEER — DATE 02-13-15

May 1, 2015
PLANS APPROVAL DATE

REGISTERED PROFESSIONAL ENGINEER — Gabriel J. Galo — No. 52288 — Exp. 12-31-16 — CIVIL — STATE OF CALIFORNIA

The State of California or its officers or agents shall not be responsible for the accuracy or completeness of electronic copies of this plan sheet.

GENERAL NOTES

DESIGN:

AASHTO LRFD Bridge Design Specifications, 4th Edition with California Amendments.

PRESTRESSING STEEL:

Bars - ASTM Designation: A722 Type II (150 ksi)

Strand Tendons-ASTM Designation: A416 (270 Ksi Low Relaxation steel)

FTL = Factored Test Load per anchor (Kips)

fpu = Minimum tensile strength of prestressing steel

As = Minimum cross sectional area of prestressing steel in ground anchor (square inch)

$$As(Min) = \frac{1.0\ FTL}{0.75\ fpu} \quad \text{(Strands)}$$

$$As(Min) = \frac{1.0\ FTL}{0.80\ fpu} \quad \text{(Bars)}$$

NOTES:

(A) Level of initial grouting for drilled hole 6" in diameter or smaller

(B) Level of secondary grouting

(C) Level of initial grouting inside corrugated sheathing

(D) Bonded length shall be determined by the contractor

(E) For unbonded length, see PROJECT PLANS

(F) For inclination, see PROJECT PLANS

NOTES:

1. Anchorage enclosure shall only be used when anchor head assembly is not enclosed in concrete.
2. Anchorage enclosure shall have provisions to allow injecting grout at low end and venting at high end. Galvanize after fabrication.
3. Silicone sealant to cover full width of flange.
4. Steel tube (Min thickness = 1/4") welded to bearing plate. Galvanize assembly after fabrication
5. Steel tube welded to bearing plate. Inside diameter of steel tube (Min thickness = 1/4") to be 1" greater than outside diameter of smooth sheathing.
6. Galvanize assembly after fabrication.
7. For other wall details, see PROJECT PLANS.

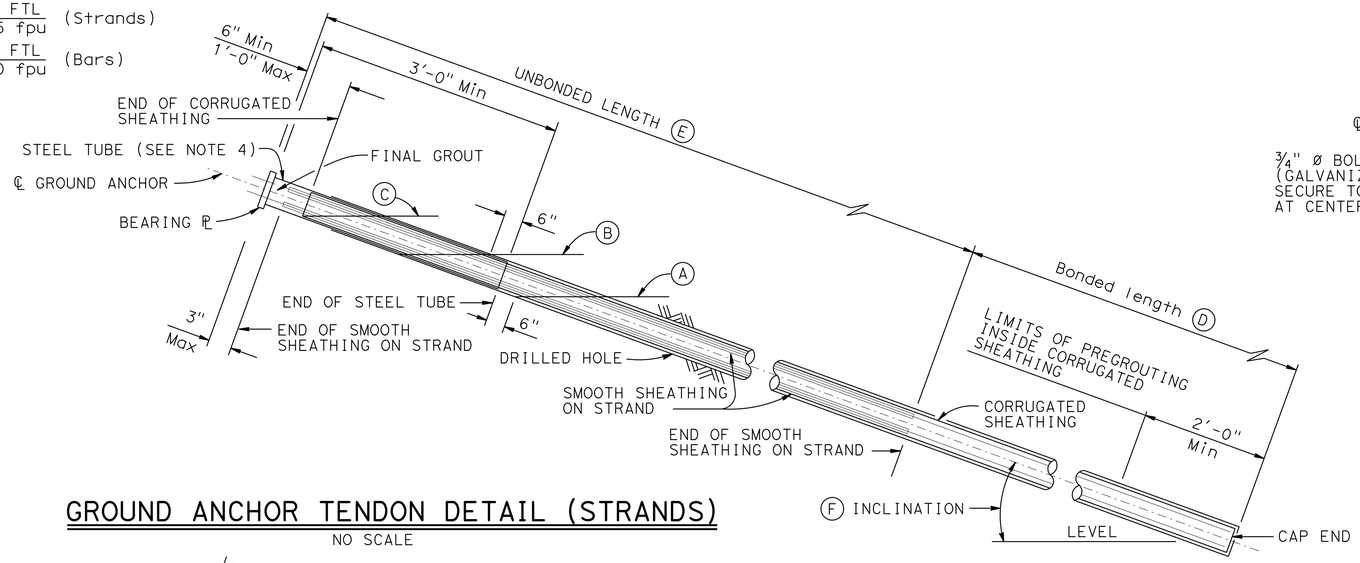

GROUND ANCHOR TENDON DETAIL (STRANDS)

NO SCALE

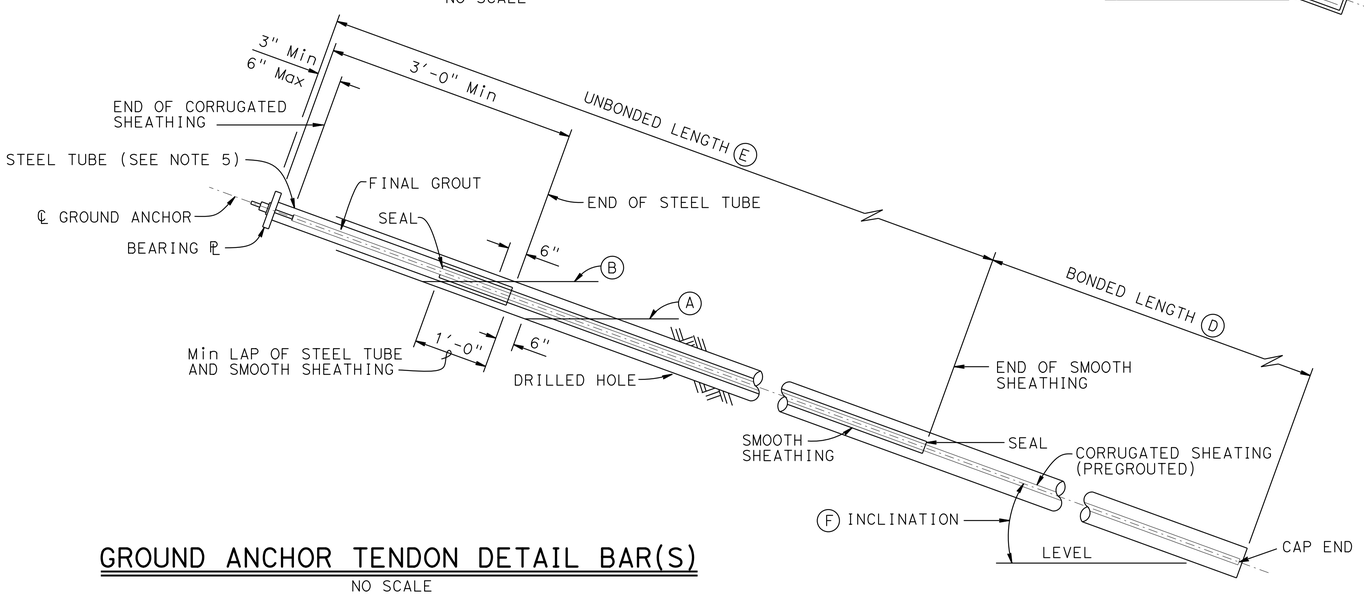

GROUND ANCHOR TENDON DETAIL BAR(S)

NO SCALE

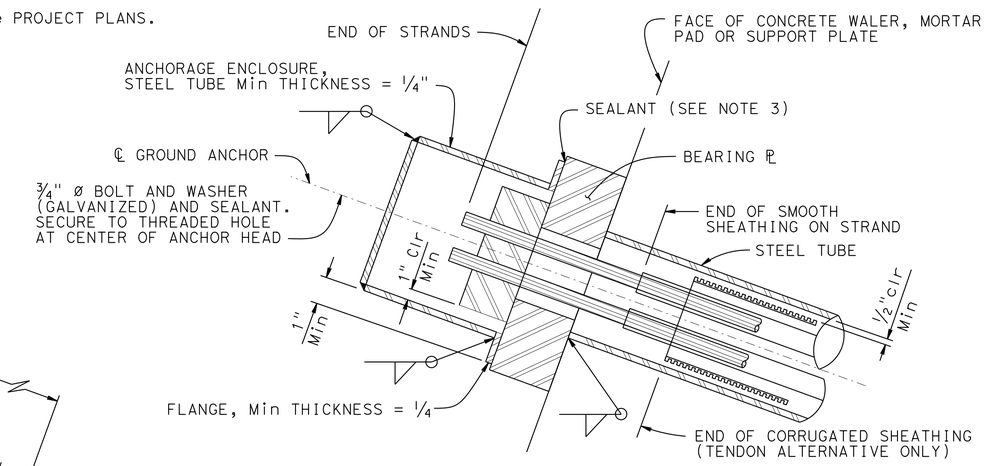

ALTERNATIVE X

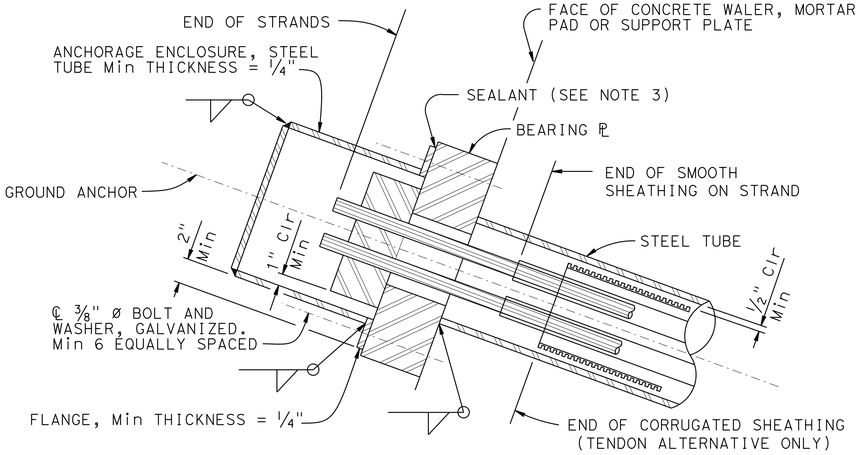

ALTERNATIVE Y

ANCHORAGE ENCLOSURE DETAILS

NO SCALE

STANDARD DRAWING			STATE OF CALIFORNIA DEPARTMENT OF TRANSPORTATION	DIVISION OF ENGINEERING SERVICES	BRIDGE NO. 01E0019 / POST MILE 21.9-22.0	SOUTH HAMILTON RETAINING WALL SUB HORIZONTAL GROUND ANCHOR DETAILS
FILE NO. xs12-040	APPROVAL DATE July 2014					

DS OSD 2147A (ENGLISH STANDARD DRAWING "XS" BORDER REV. (02-02-11)

ORIGINAL SCALE IN INCHES FOR REDUCED PLANS 0 1 2 3

UNIT: 3604
PROJECT NUMBER & PHASE: 0112000114
CONTRACT NO.: 01-0B300

DISREGARD PRINTS BEARING EARLIER REVISION DATES → 7-09-14

SHEET 10 OF 18

FILE => za01-0b300-r-ga_dtl.dgn

USERNAME => s120115 DATE PLOTTED => 06-JUL-2015 TIME PLOTTED => 12:03

DIST	COUNTY	ROUTE	POST MILES TOTAL PROJECT	SHEET No.	TOTAL SHEETS
01	DN	101	21.9	48	55

REGISTERED CIVIL ENGINEER — DATE 02-13-15

May 1, 2015
PLANS APPROVAL DATE

REGISTERED PROFESSIONAL ENGINEER — Gabriel J. Galo — No. 52288 — Exp. 12-31-16 — CIVIL — STATE OF CALIFORNIA

The State of California or its officers or agents shall not be responsible for the accuracy or completeness of electronic copies of this plan sheet.

NOTES:
1. No clipping of timber lagging corners allowed except for top member.
2. Spikes shall not be bent

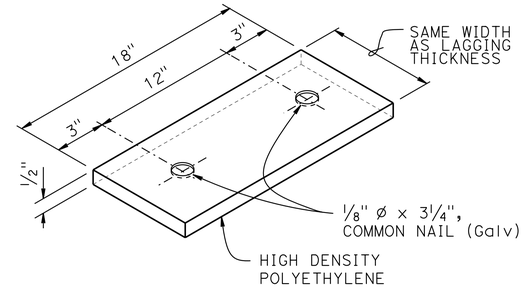

SHIM DETAIL
NO SCALE

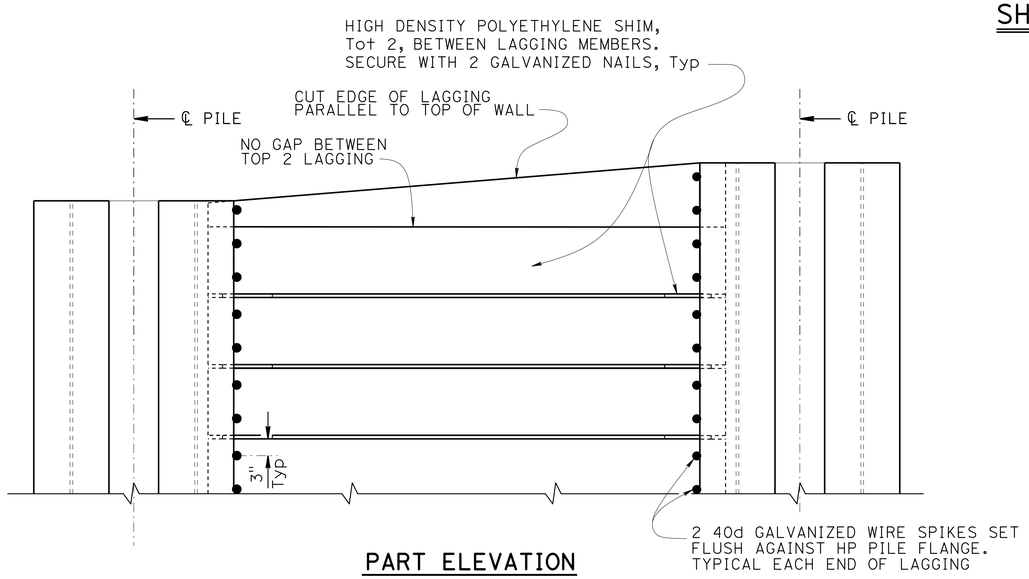

PART ELEVATION
LAGGING DETAILS (ALTERNATIVE 1)
NO SCALE

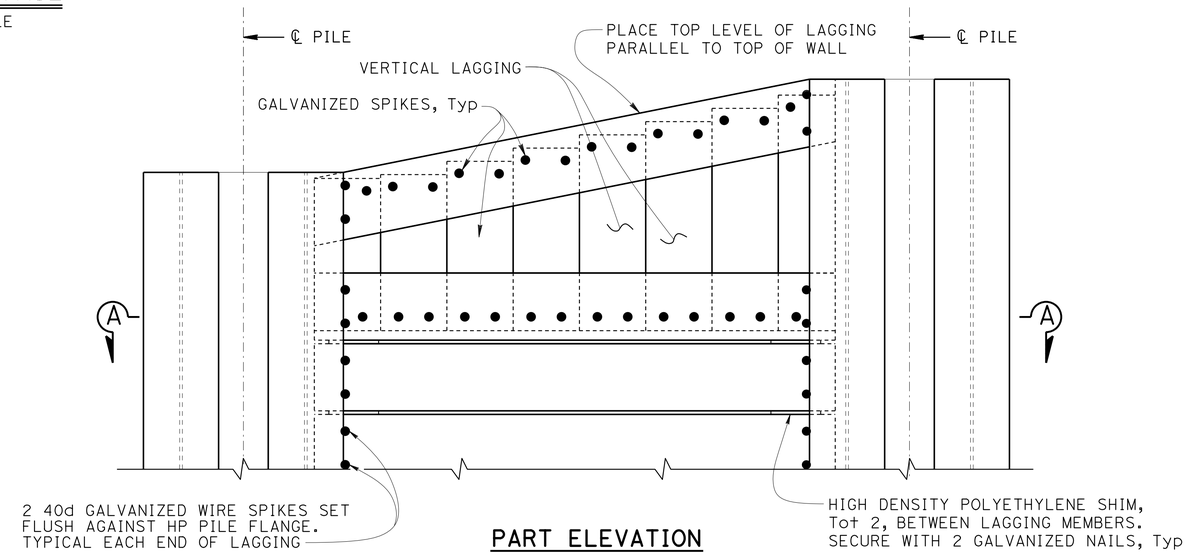

PART ELEVATION
LAGGING DETAILS (ALTERNATIVE 2)
NO SCALE

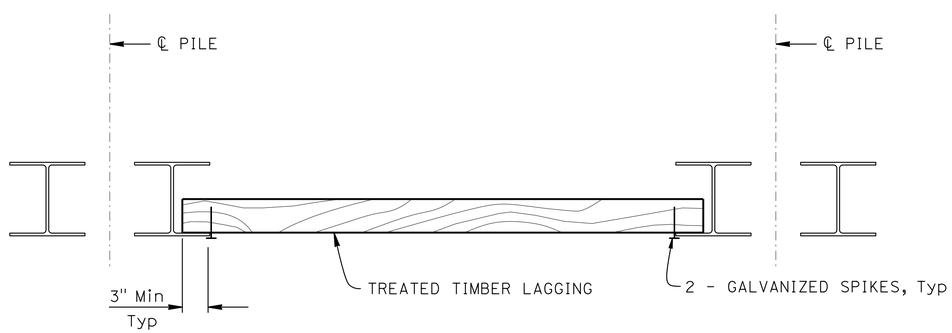

PART PLAN
NO SCALE

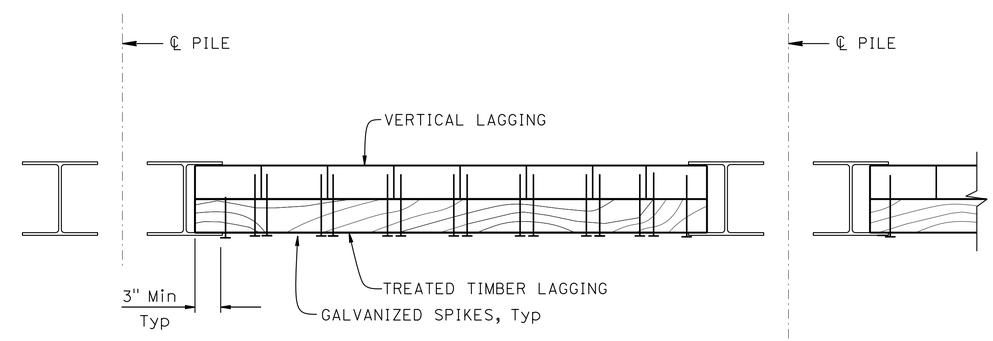

SECTION A-A
NO SCALE

	BY	CHECKED
DESIGN	G. Galo	F. Feng
DETAILS	T. Trefz	F. Feng
QUANTITIES	T. Trefz	F. Feng

STATE OF CALIFORNIA
DEPARTMENT OF TRANSPORTATION

DIVISION OF ENGINEERING SERVICES
STRUCTURE DESIGN
DESIGN BRANCH 15

BRIDGE NO. 01E0019
POST MILE 21.9-22.0

SOUTH HAMILTON RETAINING WALL
SOLDIER PILE WALL LAGGING DETAILS

STRUCTURES DESIGN DETAIL SHEET (ENGLISH) (REV. 09-01-10)

ORIGINAL SCALE IN INCHES FOR REDUCED PLANS 0 1 2 3

UNIT: 3604
PROJECT NUMBER & PHASE: 0112000114
CONTRACT NO.: 01-0B300

DISREGARD PRINTS BEARING EARLIER REVISION DATES
REVISION DATES: 12-24-14 01-21-15 02-04-15

SHEET 11 OF 18

FILE => za01-0b300-r-lag_dtl.dgn

USERNAME => s120115 DATE PLOTTED => 06-JUL-2015 TIME PLOTTED => 12:03

DIST	COUNTY	ROUTE	POST MILES TOTAL PROJECT	SHEET No.	TOTAL SHEETS
01	DN	101	21.9	49	55

REGISTERED CIVIL ENGINEER — DATE 02-13-15

May 1, 2015
PLANS APPROVAL DATE

REGISTERED PROFESSIONAL ENGINEER — Gabriel J. Galo — No. 52288 — Exp. 12-31-16 — CIVIL — STATE OF CALIFORNIA

The State of California or its officers or agents shall not be responsible for the accuracy or completeness of electronic copies of this plan sheet.

DESIGN DATA

DESIGN: AASHTO LRFD Bridge Design Specifications, 4th Edition with California Amendments.

WS: 33 psf on sound wall

F_t : 54 kips on barrier

EQE: $k_h = 0.2$
$k_v = 0.0$

REINFORCED CONCRETE:
f'c = 3600 psi
fy = 60 ksi
n = 8

NOTES: ④

1. Clearance to reinforcing steel in concrete barrier to be 1".
2. Not all barrier reinforcement shown.
3. No expansion joints in concrete barrier or barrier slab within wall limits.
4. Specific concrete barrier to be used is shown elsewhere in Project Plans.
5. Minimum slab length: 40 ft
6. All reinforcing bars in concrete barrier slab and concrete Type ST-10 barrier base must be epoxy coated.
7. All Metal components of the Concrete Barrier Type ST-10 (Mod) to be galvanized.

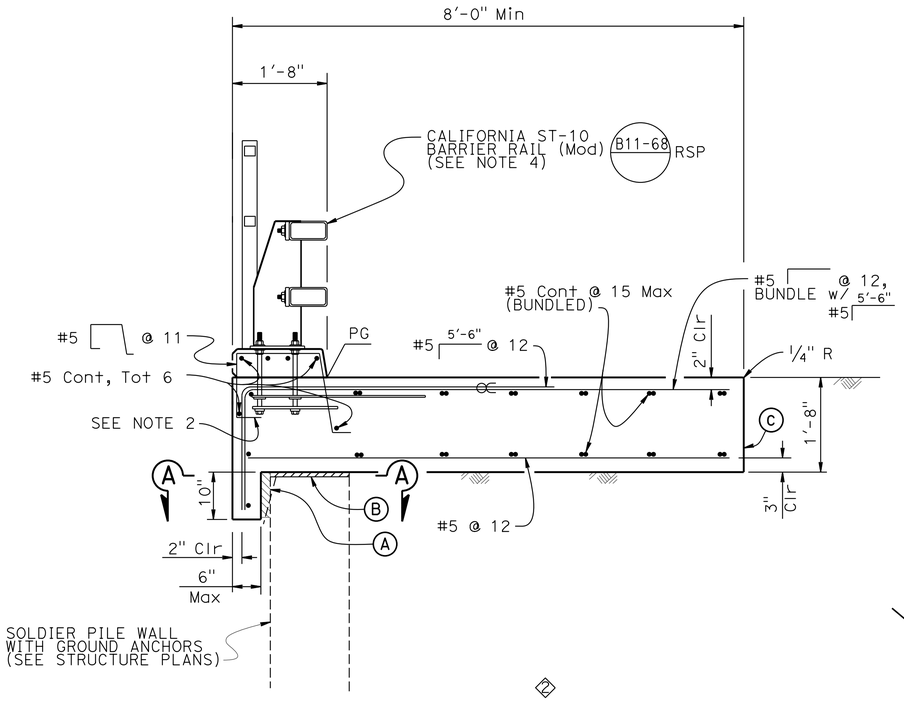

② CONCRETE BARRIER SLAB
3/4" = 1'-0"

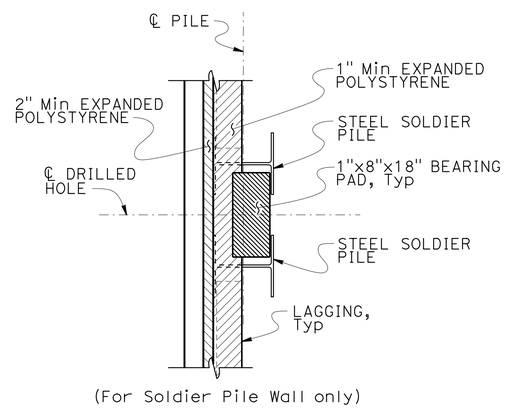

(For Soldier Pile Wall only)

② SECTION A-A
1/2" = 1'-0"

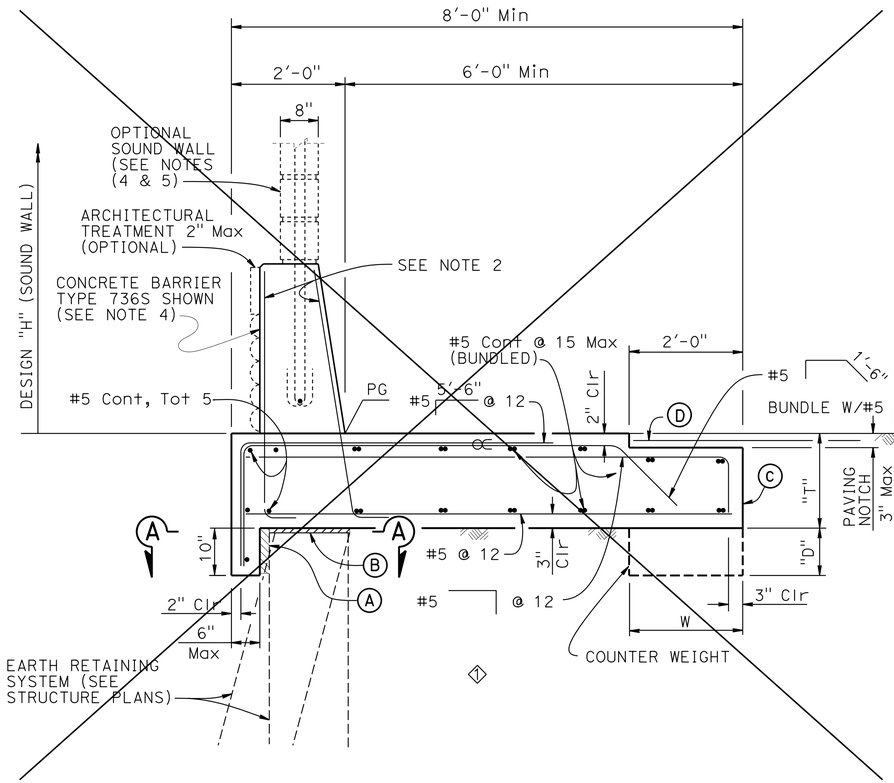

① CONCRETE BARRIER SLAB WITH PAVING NOTCH
3/4" = 1'-0"

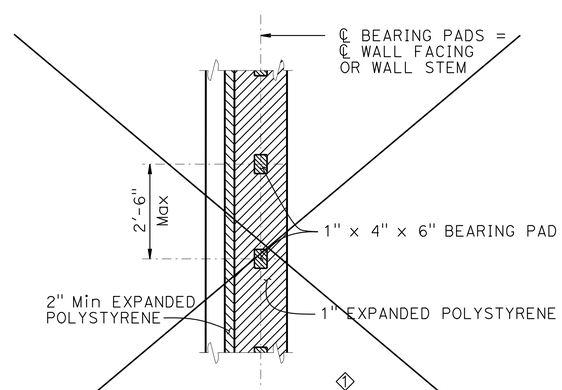

① SECTION A-A
1/2" = 1'-0"
(For all other Earth Retaining Systems)

BARRIER SLAB DIMENSIONS

DESIGN "H" OF SOUND WALL	NO SW	12'-4"	14'-4"	16'-4"
BARRIER TYPE	732 736 742	736 S	736 S	736 S
T	1'-8"	1'-8"	2'-0"	2'-0"
W	N/A	N/A	N/A	2'-0"
D	N/A	N/A	N/A	0'-9"

③

NOTES:

Ⓐ 2" Min Expanded polystyrene

④ Ⓑ 1" Min Expanded Polystyrene on top of Soldier Pile Wall, See "SECTION A-A" for Soldier Pile Walls

Ⓒ Contact joint

Ⓓ 4'-0" wide pavement reinforcing fabric

∝ Indicates bundled bars

REVISED STANDARD DRAWING

FILE NO. xs12-090

APPROVAL DATE July 2014

① Detail Does Not Apply
② Detail Modified
③ Table Does Not Apply
④ Notes Modified

STATE OF CALIFORNIA
DEPARTMENT OF TRANSPORTATION

DIVISION OF ENGINEERING SERVICES

BRIDGE NO. 01E0019
POST MILE 21.9-22.0

SOUTH HAMILTON RETAINING WALL
CONCRETE BARRIER SLAB DETAILS

DS OSD 2147A (ENGLISH STANDARD DRAWING "XS" BORDER REV. (02-02-11)

ORIGINAL SCALE IN INCHES FOR REDUCED PLANS 0 1 2 3

UNIT: 3604
PROJECT NUMBER & PHASE: 0112000114
CONTRACT NO.: 01-0B300

DISREGARD PRINTS BEARING EARLIER REVISION DATES

REVISION DATES: 10-13-14 03-18-15

SHEET 12 OF 18

FILE => za01-0b300-s-cbs.dgn

USERNAME => s120115 DATE PLOTTED => 06-JUL-2015 TIME PLOTTED => 12:03

DIST	COUNTY	ROUTE	POST MILES TOTAL PROJECT	SHEET No.	TOTAL SHEETS
01	DN	101	21.9	50	55

REGISTERED CIVIL ENGINEER — DATE 02-13-15

May 1, 2015
PLANS APPROVAL DATE

REGISTERED PROFESSIONAL ENGINEER — Gabriel J. Galo — No. 52288 — Exp. 12-31-16 — CIVIL — STATE OF CALIFORNIA

The State of California or its officers or agents shall not be responsible for the accuracy or completeness of electronic copies of this plan sheet.

NOTE:
For ST-10 Rail details see STANDARD PLANS 2010, B11-68, B11-69 & B11-70

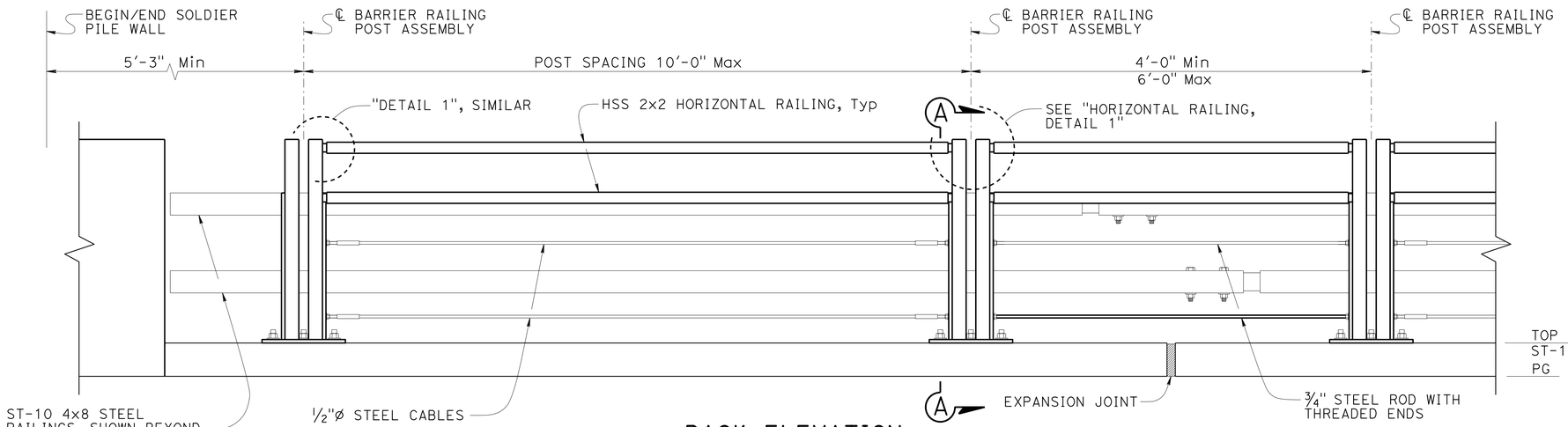

BACK ELEVATION
1" = 1'-0"

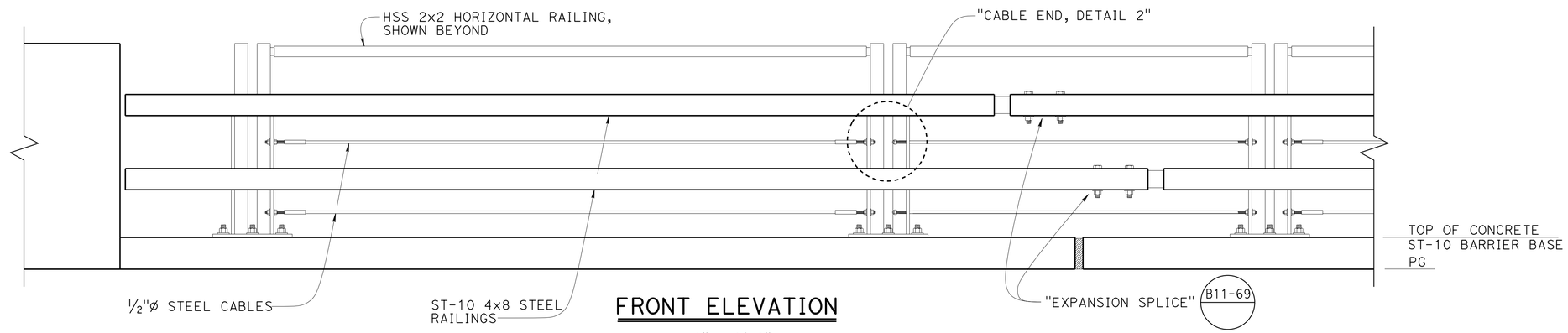

FRONT ELEVATION
1" = 1'-0"

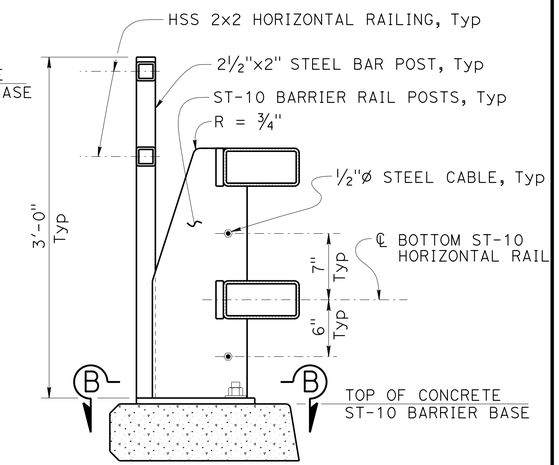

SECTION A-A
1½" = 1'-0"

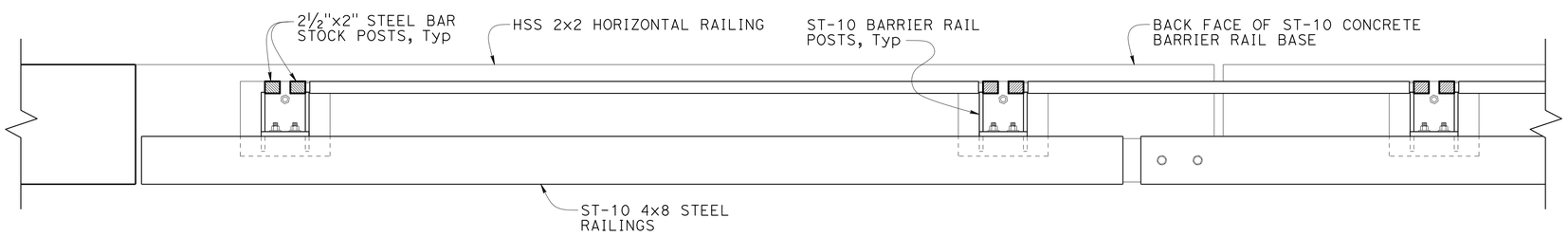

PLAN
1" = 10'

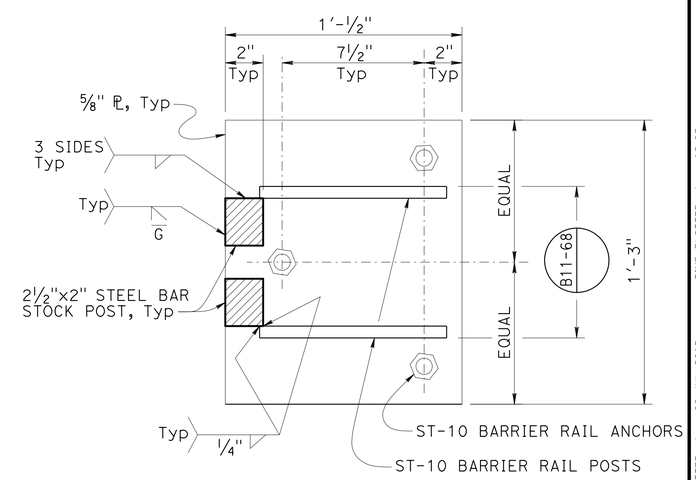

SECTION B-B
1½" = 1'-0"

NOTE:
THE CONTRACTOR MUST VERIFY ALL CONTROLLING FIELD DIMENSIONS BEFORE ORDERING OR FABRICATING ANY MATERIAL.

	BY	CHECKED
DESIGN	G. Galo	F. Feng
DETAILS	T. Trefz	G. Galo
QUANTITIES	T. Trefz	F. Feng

STATE OF CALIFORNIA
DEPARTMENT OF TRANSPORTATION

DIVISION OF ENGINEERING SERVICES
STRUCTURE DESIGN
DESIGN BRANCH 15

BRIDGE NO. 01E0019
POST MILE 21.9-22.0

SOUTH HAMILTON RETAINING WALL
BARRIER RAIL DETAILS No. 1

STRUCTURES DESIGN DETAIL SHEET (ENGLISH) (REV. 09-01-10)

ORIGINAL SCALE IN INCHES FOR REDUCED PLANS 0 1 2 3

UNIT: 3604
PROJECT NUMBER & PHASE: 0112000114
CONTRACT NO.: 01-0B300

DISREGARD PRINTS BEARING EARLIER REVISION DATES

REVISION DATES: 10-08-14

SHEET 13 OF 18

FILE => za01-0b300-t-bardlt_01.dgn

USERNAME => s120115 DATE PLOTTED => 06-JUL-2015 TIME PLOTTED => 12:03

DIST	COUNTY	ROUTE	POST MILES TOTAL PROJECT	SHEET No.	TOTAL SHEETS
01	DN	101	21.9	51	55

REGISTERED CIVIL ENGINEER 02-13-15 DATE

May 1, 2015
PLANS APPROVAL DATE

REGISTERED PROFESSIONAL ENGINEER Gabriel J. Galo No. 52288 Exp. 12-31-16 CIVIL STATE OF CALIFORNIA

The State of California or its officers or agents shall not be responsible for the accuracy or completeness of electronic copies of this plan sheet.

NOTE:
For ST-10 Rail details see STANDARD PLANS 2010, B11-68, B11-69 & B11-70

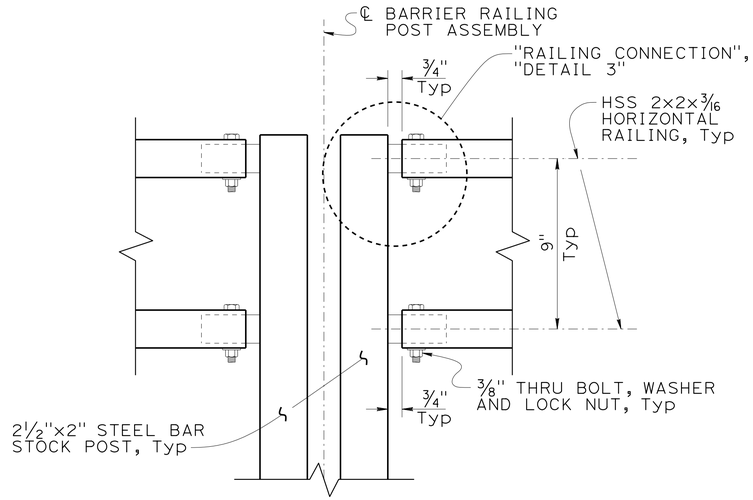

HORIZONTAL RAILING DETAIL 1

3" = 1'-0"

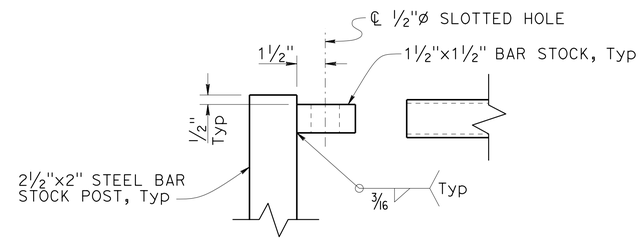

ELEVATION

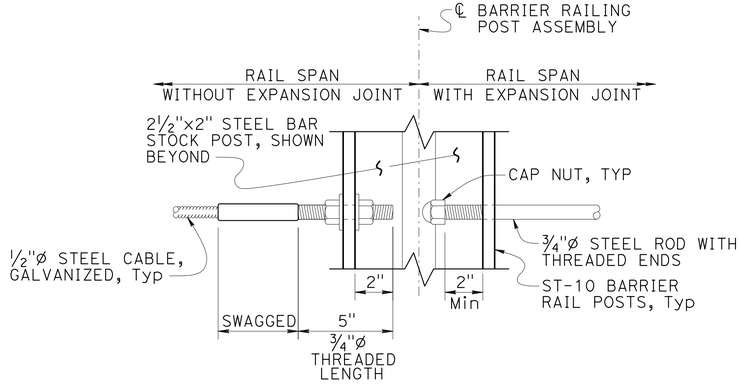

CABLE END DETAIL 2

3" = 1'-0"

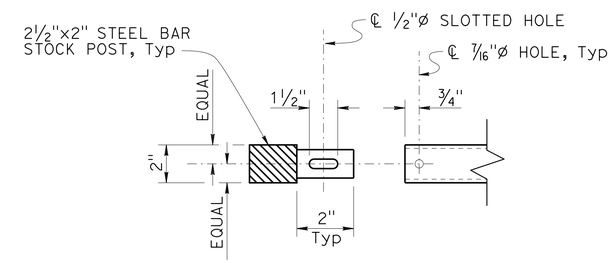

PLAN

NOTE:
HSS Railing shown seperated for clarity

RAILING CONNECTION DETAIL 3

3" = 1'-0"

NOTE:
THE CONTRACTOR MUST VERIFY ALL CONTROLLING FIELD DIMENSIONS BEFORE ORDERING OR FABRICATING ANY MATERIAL.

	BY	CHECKED
DESIGN	G. Galo	F. Feng
DETAILS	T. Trefz	G. Galo
QUANTITIES	T. Trefz	F. Feng

STATE OF CALIFORNIA
DEPARTMENT OF TRANSPORTATION

DIVISION OF ENGINEERING SERVICES
STRUCTURE DESIGN
DESIGN BRANCH 15

BRIDGE NO. 01E0019
POST MILE 21.9-22.0

SOUTH HAMILTON RETAINING WALL
BARRIER RAIL DETAILS No. 2

STRUCTURES DESIGN DETAIL SHEET (ENGLISH) (REV. 09-01-10)

ORIGINAL SCALE IN INCHES FOR REDUCED PLANS 0 1 2 3

UNIT: 3604
PROJECT NUMBER & PHASE: 0112000114
CONTRACT NO.: 01-0B300

DISREGARD PRINTS BEARING EARLIER REVISION DATES

REVISION DATES 10-09-14

SHEET 14 OF 18

FILE => za01-0b300-t-bardit_02.dgn

USERNAME => s120115 DATE PLOTTED => 06-JUL-2015 TIME PLOTTED => 12:03

DIST	COUNTY	ROUTE	POST MILES TOTAL PROJECT	SHEET No.	TOTAL SHEETS
01	DN	101	21.9	52	55

REGISTERED CIVIL ENGINEER — DATE 1-20-15

May 1, 2015
PLANS APPROVAL DATE

REGISTERED PROFESSIONAL ENGINEER — Kathryn Gallagher — No. C 62012 — Exp. 9-30-15 — CIVIL — STATE OF CALIFORNIA

The State of California or its officers or agents shall not be responsible for the accuracy or completeness of electronic copies of this plan sheet.

This LOTB sheet was prepared in accordance with the Caltrans Soil & Rock Logging, Classification, & Presentation Manual (2010 Edition).

See 2010 Standard Plans A10F and A10G for Soil Legend, and A10H for Rock Legend.

BENCH MARK

PRHV2190
Fnd CalTrans ALCAR STAMPED:"PC 21.90"
35.89′ Left "A1" Line
Sta 494+49.888
N 2,514,679.12
E 5,979,246.64
Elev = 689.01
PRHV2200
Fnd CalTrans ALCAR,STAMPED:"DN-101-22.00"
31.50′ Left "A1" Line
Sta 500+15.41
N 2,514,925.03
E 5,978,723.31
Elev = 650.47
Vertical Datum: NAVD88

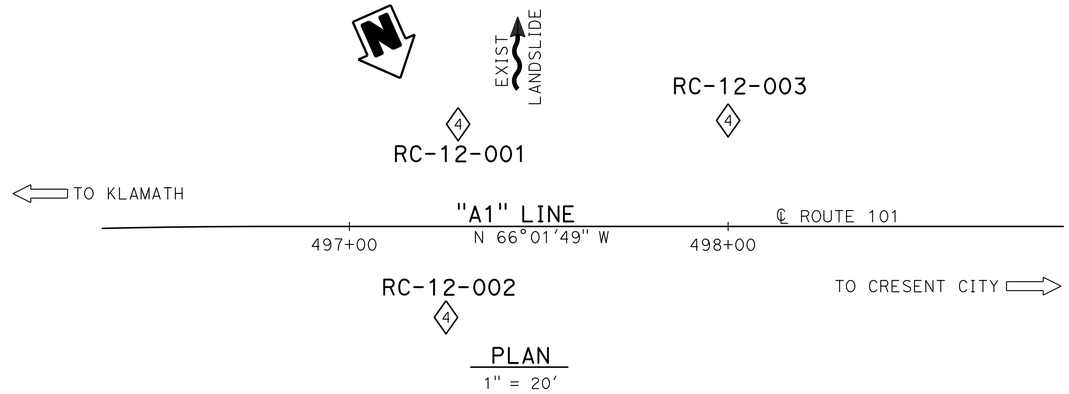

PLAN
1" = 20′

Notes:

1. Groundwater levels indicated on the Log of Test Borings (LOTB) sheets reflect the measured groundwater levels in the boring on the specified date. Groundwater surface elevations are subject to seasonal fluctuations and will be encountered at higher or lower elevations depending upon the conditions at the time of construction.
2. During the subsurface investigation, circulation was lost in all borings and casing was installed. Refer to the LOTB sheets for casing elevations.
3. Core samples from the 2012 subsurface investigation are available for viewing by the bidders at the California Department of Transportation, 5900 Folsom Blvd., Sacramento, Ca 95819.

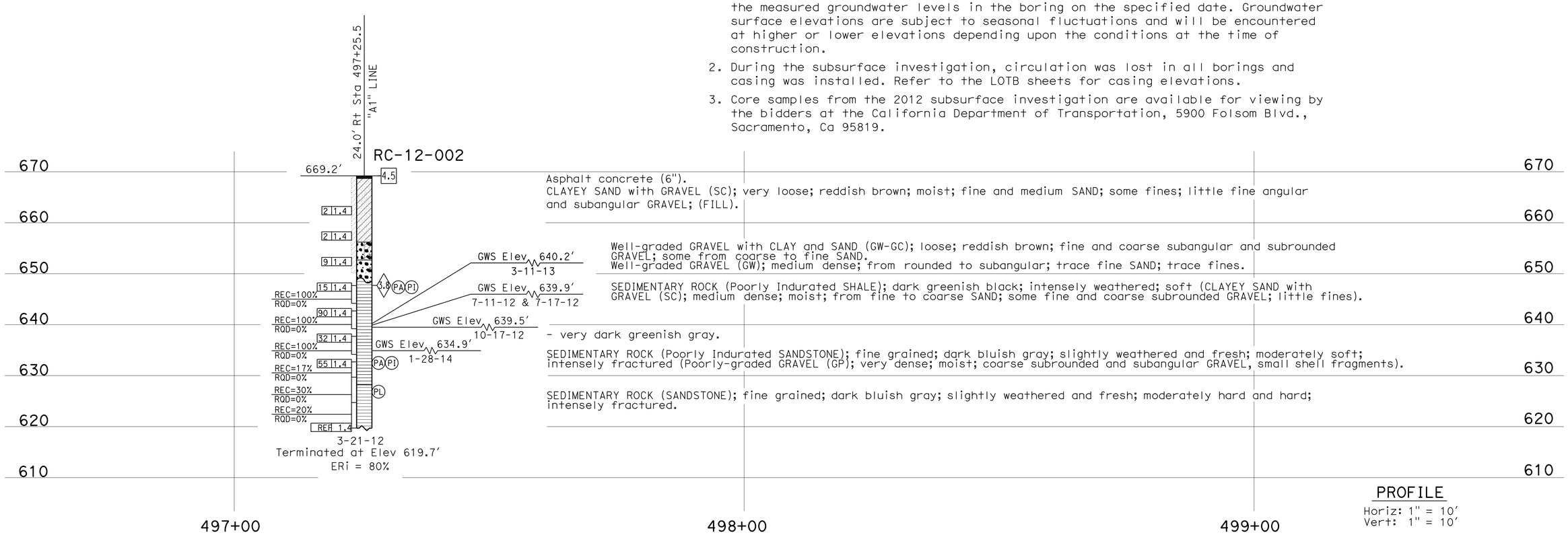

PROFILE
Horiz: 1" = 10′
Vert: 1" = 10′

ENGINEERING SERVICES	MATERIALS AND GEOTECHNICAL SERVICES	STATE OF CALIFORNIA DEPARTMENT OF TRANSPORTATION	DIVISION OF ENGINEERING SERVICES STRUCTURE DESIGN DESIGN BRANCH 15	BRIDGE NO. 01E0019 / POST MILE 21.9-22.0	SOUTH HAMILTON RETAINING WALL LOG OF TEST BORINGS 1 OF 4
FUNCTIONAL SUPERVISOR NAME: C. Narwold	DRAWN BY: F. Nguyen / CHECKED BY: R. Newman	FIELD INVESTIGATION BY: K. Gallagher			

OGS CIVIL LOG OF TEST BORINGS SHEET

ORIGINAL SCALE IN INCHES FOR REDUCED PLANS 0 1 2 3

UNIT: 3604
PROJECT NUMBER & PHASE: 0112000114
CONTRACT NO.: 01-0B300

DISREGARD PRINTS BEARING EARLIER REVISION DATES

REVISION DATES: 10-17-14 01-09-15 01-20-15 — SHEET 15 OF 18

FILE => za01-0b300-z-lotb_01.dgn

USERNAME => s120115 DATE PLOTTED => 06-JUL-2015 TIME PLOTTED => 12:03

DIST	COUNTY	ROUTE	POST MILES TOTAL PROJECT	SHEET No.	TOTAL SHEETS
01	DN	101	21.9	53	55

REGISTERED CIVIL ENGINEER — DATE 1-20-15

May 1, 2015
PLANS APPROVAL DATE

REGISTERED PROFESSIONAL ENGINEER — Kathryn Gallagher — No. C 62012 — Exp. 9-30-15 — CIVIL — STATE OF CALIFORNIA

The State of California or its officers or agents shall not be responsible for the accuracy or completeness of electronic copies of this plan sheet.

This LOTB sheet was prepared in accordance with the Caltrans Soil & Rock Logging, Classification, & Presentation Manual (2010 Edition).

See 2010 Standard Plans A10F and A10G for Soil Legend, and A10H for Rock Legend.

FOR PLAN VIEW, SEE
"LOG OF TEST BORINGS 1 OF 4"

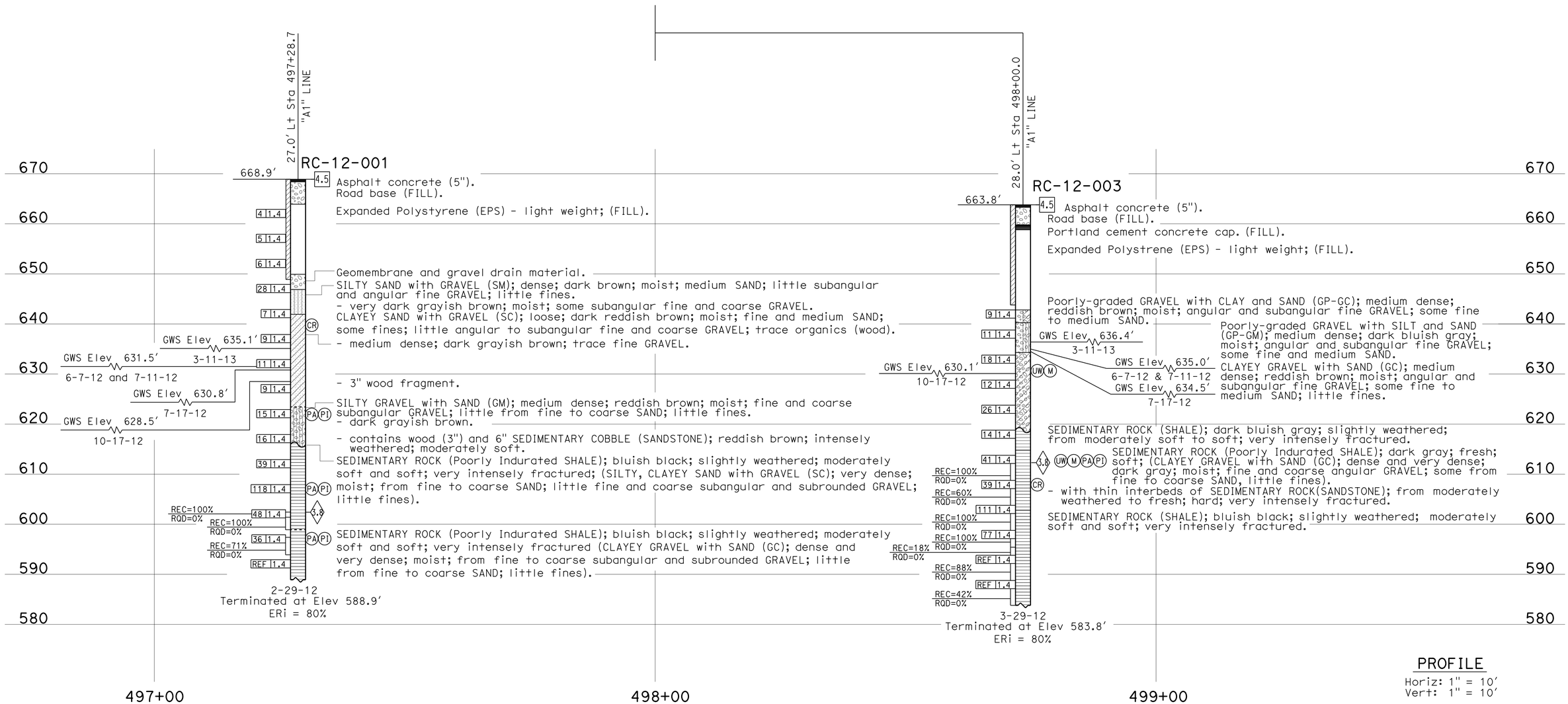

PROFILE
Horiz: 1" = 10'
Vert: 1" = 10'

ENGINEERING SERVICES	MATERIALS AND GEOTECHNICAL SERVICES	STATE OF CALIFORNIA DEPARTMENT OF TRANSPORTATION	DIVISION OF ENGINEERING SERVICES STRUCTURE DESIGN DESIGN BRANCH 15	BRIDGE NO. 01E0019 POST MILE 21.9-22.0	SOUTH HAMILTON RETAINING WALL LOG OF TEST BORINGS 2 OF 4
FUNCTIONAL SUPERVISOR NAME: C. Narwold	DRAWN BY: F. Nguyen CHECKED BY: R. Newman	FIELD INVESTIGATION BY: K. Gallagher			

OGS CIVIL LOG OF TEST BORINGS SHEET — ORIGINAL SCALE IN INCHES FOR REDUCED PLANS 0 1 2 3 — UNIT: 3604 — PROJECT NUMBER & PHASE: 0112000114 — CONTRACT NO.: 01-0B300 — DISREGARD PRINTS BEARING EARLIER REVISION DATES — REVISION DATES 10-17-14 01-09-15 01-20-15 — SHEET 16 OF 18

FILE => za01-0b300-z-lotb_02.dgn

USERNAME => s120175 DATE PLOTTED => 06-JUL-2015 TIME PLOTTED => 12:03

Dist	COUNTY	ROUTE	POST MILES TOTAL PROJECT	SHEET No.	TOTAL SHEETS
01	DN	101	21.9	54	55

REGISTERED CIVIL ENGINEER 12-12-97

May 1, 2015
PLANS APPROVAL DATE

REGISTERED PROFESSIONAL ENGINEER RICHARD D. SOMERS No. 38788 EXP. 3-31-01 CIVIL STATE OF CALIFORNIA

TABER CONSULTANTS
536 Galveston Street
West Sacramento, CA 95691
JOB No. 1P2/397/30-2.2b

LOCATION: 41124-F2: 324N: 023W

Dokken Engineering
3054 Gold Canal Drive
Rancho Cordova, CA 95670

Taber Consultants, its officers or agents shall not be responsible for the accuracy or completeness of electronic copies of this plan sheet.

Taber Metric

DIVISION OF ENGINEERING SERVICES - MATERIALS AND GEOTECHNICAL SERVICES

The information shown on this drawing was not the result of any work developed, performed or completed by this Department (Caltrans). All such activity appears to be by those parties presented on this drawing who would bear all responsibility. This drawing is available and presented only for the convenience of any bidder, contractor or other interested party. It should be understood that Caltrans assumes no responsibility with respect to the sufficiency, accuracy, completeness, or interpretation set forth therein or any other aspect of the information shown on this drawing.

DIST.	COUNTY	ROUTE	POST MILE-TOTAL PROJECT	Sheet No.	Total Sheets
01	DN	101			

REGISTERED CIVIL ENGINEER — 1-20-15 DATE

REGISTERED PROFESSIONAL ENGINEER Kathryn Gallagher No. C 62012 Exp. 9-30-15 CIVIL STATE OF CALIFORNIA

SOUTH HAMILTON RETAINING WALL

LOG OF TEST BORINGS 3 OF 4

UNIT: 3643	CONTRACT No.	BRIDGE No.
PROJ. No. & PHASE: 01120001141	01-033004	01E0019

Sheet 17 of 18

Revisions made to this Log of Test Borings from the original As-Built Log of Test Borings are the addition of the following table and note:

Boring	Station	Offset from ℄ Rte 101
B-1(A-97-001)	497+13.2	24.5 ft Right
B-2(A-97-002)	498+09.1	20.9 ft Left
B-3(A-97-003)	497+33.0	18.7 ft Left
B-4(A-97-004)	496+69.7	15.2 ft Left

Note:
The data are the As-Built Test Borings referenced to the proposed new structure location. This table is presented on the As-Built Log of Test Boring sheet for the convenience of any bidder, contractor or other interested party.

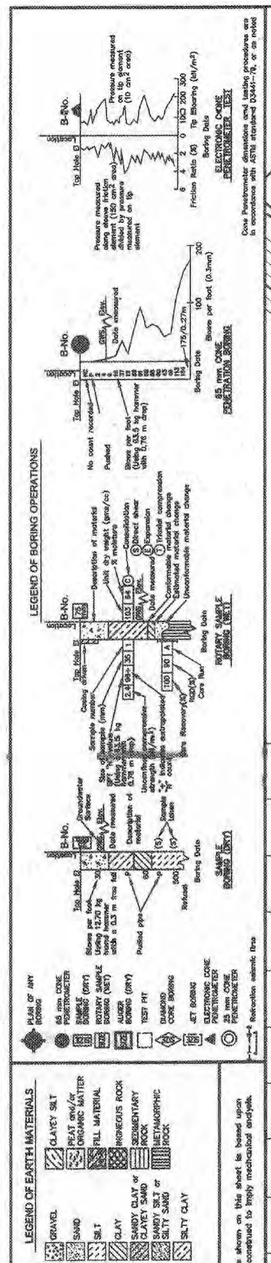

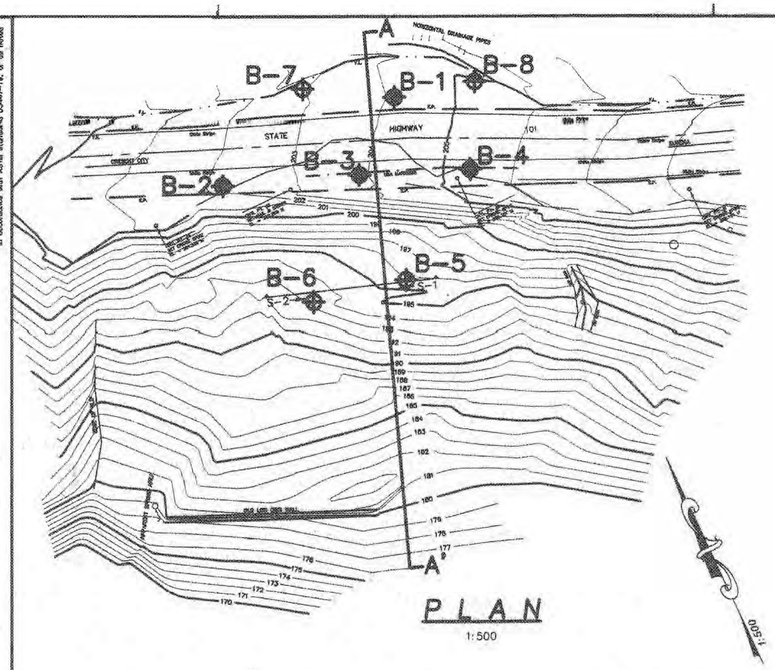

PLAN
1:500

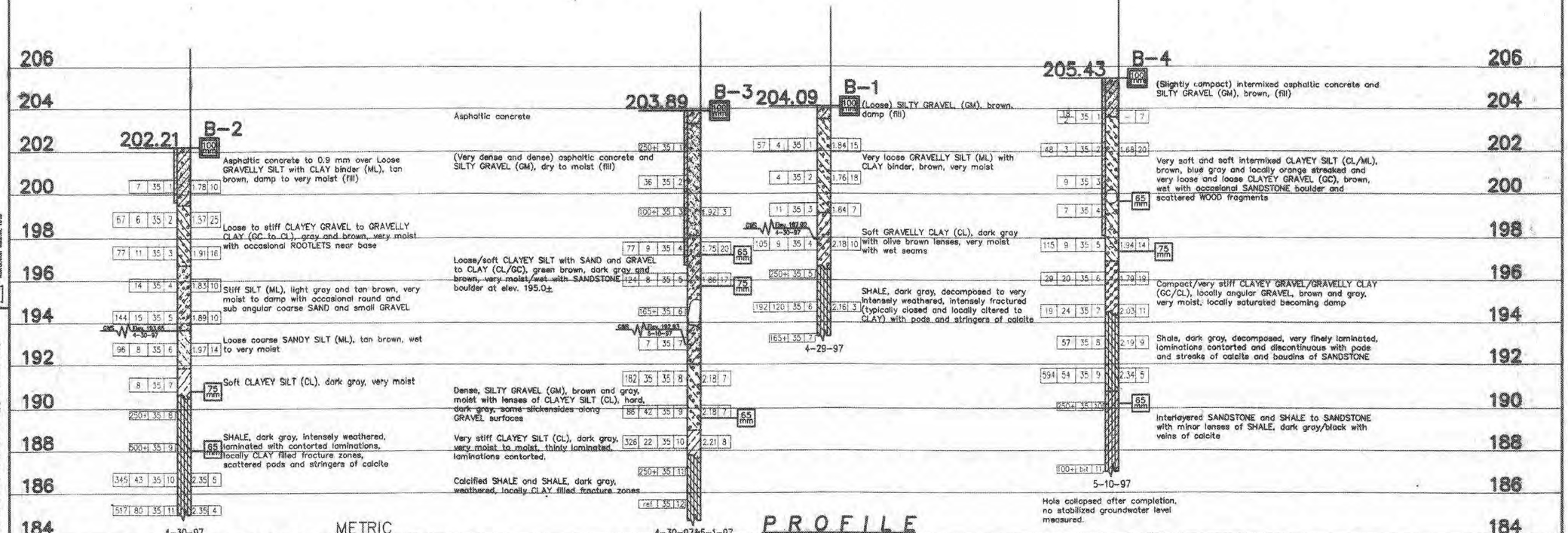

PROFILE
1:100 Horizontal & Vertical

METRIC
"ALL DIMENSIONS AND ELEVATIONS ARE IN METERS (m)".

DESIGN OVERSIGHT	DRAWN BY M.D.R. 5/97	E. A. Kilmer FIELD INVESTIGATOR	Ali Hemmati PROJECT ENGINEER
SIGN OFF DATE	CHECKED BY E.A.H. 5/97	DATE April 1997	

PREPARED FOR THE STATE OF CALIFORNIA DEPARTMENT OF TRANSPORTATION

BRIDGE NO. 01E0019
KP 21.9

DN-101 AT P.M. 21.9

LOG OF TEST BORINGS (1 of 2)

ORIGINAL SCALE IN MILLIMETERS FOR REDUCED PLANS 0 20 40 60 80

CU
EA

DISREGARD PRINTS BEARING EARLIER REVISION DATES

REVISION DATES (PRELIMINARY STAGE ONLY) SHEET OF

5/97 13973022.DWG

Dist	COUNTY	ROUTE	POST MILES TOTAL PROJECT	SHEET No.	TOTAL SHEETS
01	DN	101	21.9	55	55

REGISTERED CIVIL ENGINEER 12-12-97

May 1, 2015
PLANS APPROVAL DATE

REGISTERED PROFESSIONAL ENGINEER RICHARD D. SOWERS No. 38788 EXP. 3-31-01 CIVIL STATE OF CALIFORNIA

TABER CONSULTANTS
536 Galveston Street
West Sacramento, CA 95691
JOB No. 1P2/397/30-2.2b

LOCATION: 41124-F2: 324N: 023W

Dokken Engineering
3054 Gold Canal Drive
Rancho Cordova, CA 95670

Taber Consultants, its officers or agents shall not be responsible for the accuracy or completeness of electronic copies of this plan sheet.

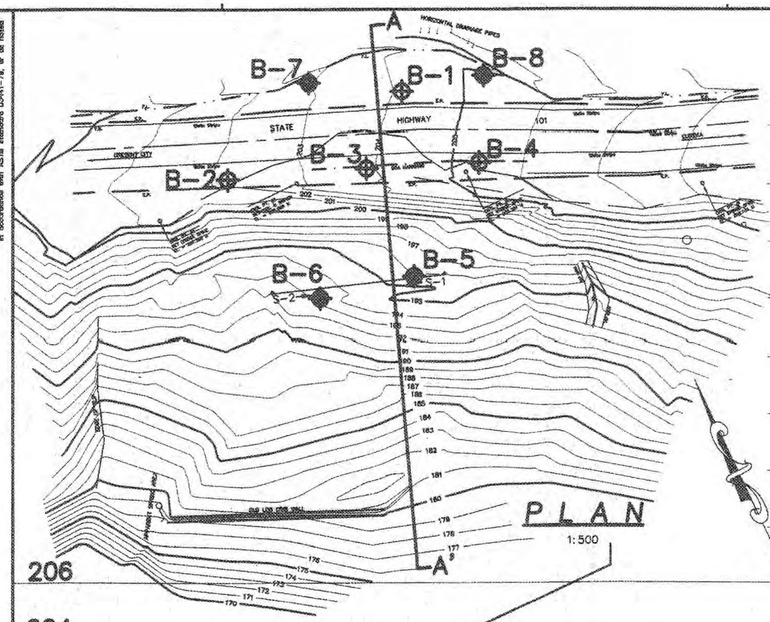

PLAN
1:500

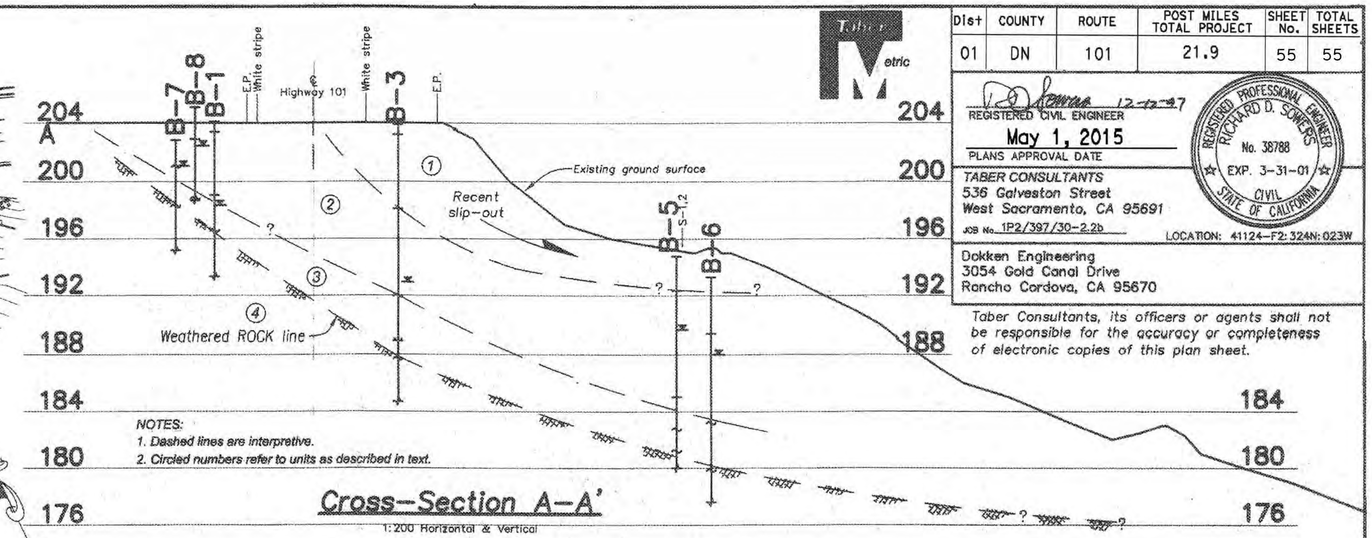

NOTES:
1. Dashed lines are interpretive.
2. Circled numbers refer to units as described in text.

Cross-Section A-A'
1:200 Horizontal & Vertical

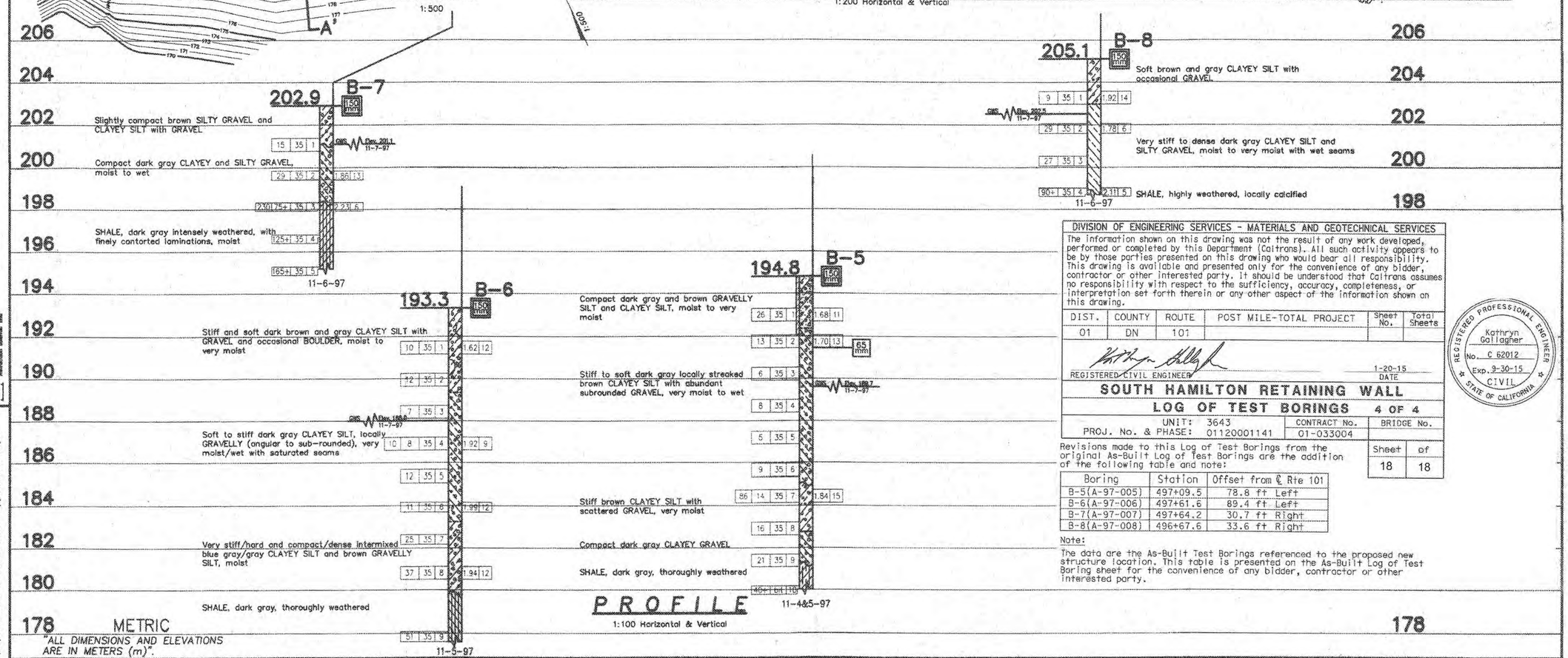

PROFILE
1:100 Horizontal & Vertical

METRIC
"ALL DIMENSIONS AND ELEVATIONS ARE IN METERS (m)".

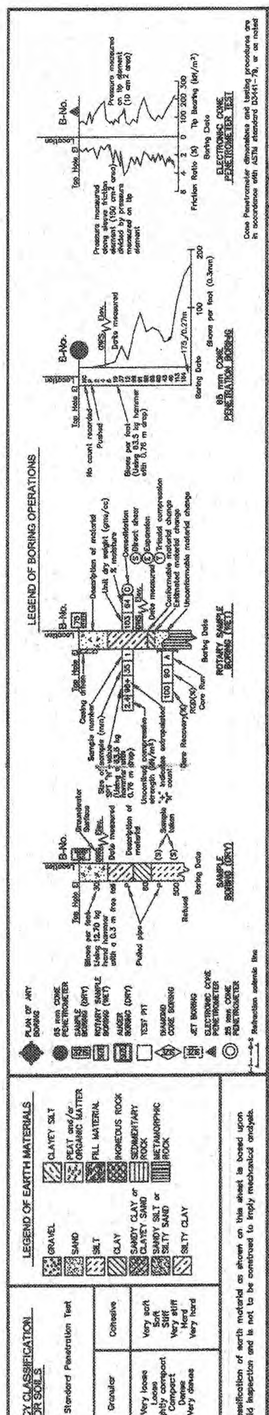

DIVISION OF ENGINEERING SERVICES - MATERIALS AND GEOTECHNICAL SERVICES

The information shown on this drawing was not the result of any work developed, performed or completed by this Department (Caltrans). All such activity appears to be by those parties presented on this drawing who would bear all responsibility. This drawing is available and presented only for the convenience of any bidder, contractor or other interested party. It should be understood that Caltrans assumes no responsibility with respect to the sufficiency, accuracy, completeness, or interpretation set forth therein or any other aspect of the information shown on this drawing.

DIST.	COUNTY	ROUTE	POST MILE-TOTAL PROJECT	Sheet No.	Total Sheets
01	DN	101			

REGISTERED CIVIL ENGINEER 1-20-15 DATE

REGISTERED PROFESSIONAL ENGINEER Kathryn Gallagher No. C 62012 Exp. 9-30-15 CIVIL STATE OF CALIFORNIA

SOUTH HAMILTON RETAINING WALL

LOG OF TEST BORINGS 4 OF 4

UNIT: 3643 | CONTRACT No. 01-033004 | BRIDGE No.
PROJ. No. & PHASE: 01120001141

Sheet 18 of 18

Revisions made to this Log of Test Borings from the original As-Built Log of Test Borings are the addition of the following table and note:

Boring	Station	Offset from ℄ Rte 101
B-5(A-97-005)	497+09.5	78.8 ft Left
B-6(A-97-006)	497+61.6	89.4 ft Left
B-7(A-97-007)	497+64.2	30.7 ft Right
B-8(A-97-008)	496+67.6	33.6 ft Right

Note:
The data are the As-Built Test Borings referenced to the proposed new structure location. This table is presented on the As-Built Log of Test Boring sheet for the convenience of any bidder, contractor or other interested party.

DESIGN OVERSIGHT
SIGN OFF DATE

DRAWN BY M.D.R. 11/97
CHECKED BY R.D.S. 11/97

E. A. Hilmer
FIELD INVESTIGATOR
DATE November 1997

PREPARED FOR THE STATE OF CALIFORNIA DEPARTMENT OF TRANSPORTATION

Ali Hemmati
PROJECT ENGINEER

BRIDGE NO. 01E0019
KP 21.9

DN-101 AT P.M. 21.9

LOG OF TEST BORINGS (2 of 2)

11/97 13973022A.DWG

ORIGINAL SCALE IN MILLIMETERS FOR REDUCED PLANS 0 20 40 60 80

CU
EA

DISREGARD PRINTS BEARING EARLIER REVISION DATES

REVISION DATES (PRELIMINARY STAGE ONLY) SHEET OF