| Dist | COUNTY | ROUTE | POST MILES TOTAL PROJECT | SHEET No. | TOTAL SHEETS |
|---|---|---|---|---|---|
| 01 | DN | 101 | 17.4 | 1 | 74 |

STATE OF CALIFORNIA

# DEPARTMENT OF TRANSPORTATION

ACSTP-ER-19C6(004)E

## PROJECT PLANS FOR CONSTRUCTION ON

# STATE HIGHWAY

## IN DEL NORTE COUNTY ABOUT 10 MILES SOUTH OF CRESCENT CITY AT 2.8 MILES SOUTH OF MILL CREEK CAMPGROUND

TO BE SUPPLEMENTED BY STANDARD PLANS DATED 2010

INDEX OF PLANS


| SHEET No. | DESCRIPTION |
|---|---|
| 1 | TITLE AND LOCATION MAP |
| 2-4 | TYPICAL CROSS SECTIONS |
| 5-6 | LAYOUTS |
| 7-8 | CONSTRUCTION DETAILS |
| 9-11 | DRAINAGE PLANS, PROFILES, DETAILS AND QUANTITIES |
| 12 | CONSTRUCTION AREA SIGNS |
| 13-14 | TRAFFIC HANDLING PLANS, DETAILS AND QUANTITIES |
| 15 | SUMMARY OF QUANTITIES |
| 16 | EROSION CONTROL PLANS, DETAILS AND QUANTITIES |
| 17-20 | SIGNAL, LIGHTING AND ELECTRICAL SYSTEMS PLANS AND DETAILS |
| 21-58 | REVISED STANDARD PLANS |

STRUCTURE PLANS

| | |
|---|---|
| 59-74 | LOG FILL REPAIR WALL |


THE STANDARD PLANS LIST APPLICABLE TO THIS CONTRACT IS INCLUDED IN THE NOTICE TO BIDDERS AND SPECIAL PROVISIONS BOOK.

LOCATION MAP

LOCATION OF CONSTRUCTION
Sta "A1" 258+00 PM 17.4

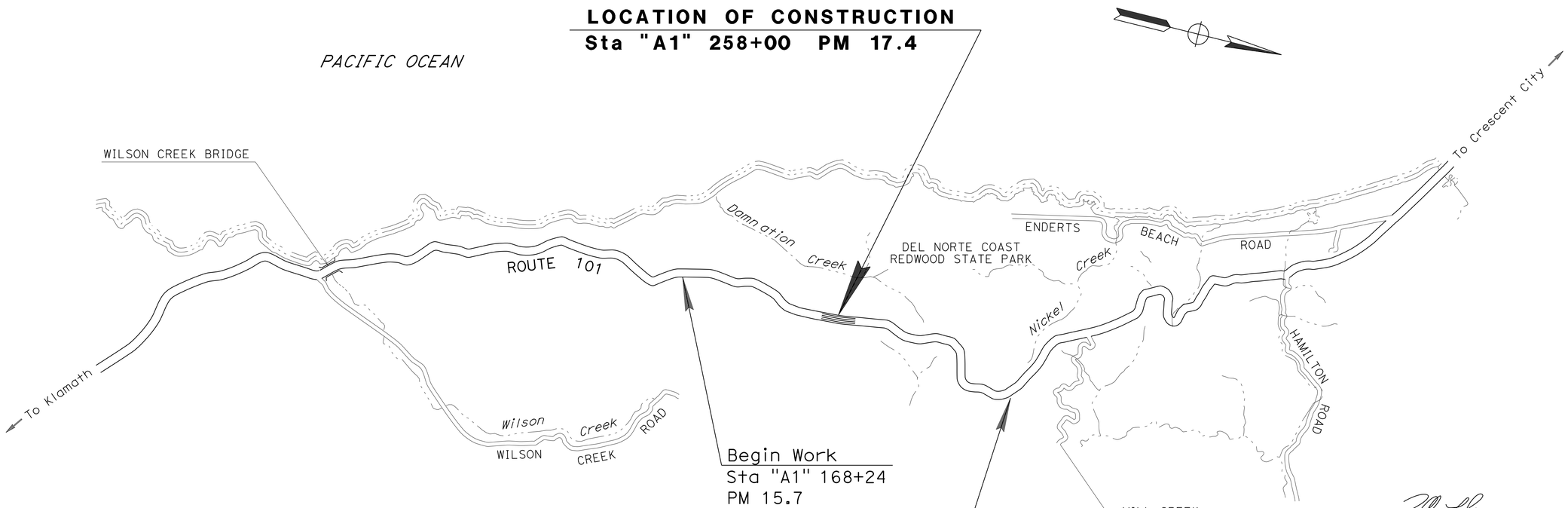


Begin Work
Sta "A1" 168+24
PM 15.7

End Work
Sta "A1" 363+60
PM 19.4

PROJECT ENGINEER REGISTERED CIVIL ENGINEER — DATE 12/04/15

January 11, 2016
PLANS APPROVAL DATE

REGISTERED PROFESSIONAL ENGINEER — T. LARK — No. 52481 — Exp. 12/31/16 — CIVIL — STATE OF CALIFORNIA

*THE STATE OF CALIFORNIA OR ITS OFFICERS OR AGENTS SHALL NOT BE RESPONSIBLE FOR THE ACCURACY OR COMPLETENESS OF SCANNED COPIES OF THIS PLAN SHEET.*

PROJECT MANAGER J. MATTEOLI

DESIGN MANAGER L. R. ASHLEY

THE CONTRACTOR SHALL POSSESS THE CLASS (OR CLASSES) OF LICENSE AS SPECIFIED IN THE "NOTICE TO BIDDERS."

NO SCALE

| CONTRACT No. | 01-0B2804 |
|---|---|
| PROJECT ID | 0112000112 |

LAST REVISION 12-04-15

DATE PLOTTED => 01-FEB-2016
TIME PLOTTED => 10:17

| Dist | COUNTY | ROUTE | POST MILES TOTAL PROJECT | SHEET No. | TOTAL SHEETS |
|---|---|---|---|---|---|
| 01 | DN | 101 | 17.4 | 2 | 74 |

REGISTERED CIVIL ENGINEER 12/04/15 DATE

January 11, 2016
PLANS APPROVAL DATE

REGISTERED PROFESSIONAL ENGINEER T. LARK No. 52481 Exp. 12/31/16 CIVIL STATE OF CALIFORNIA

*THE STATE OF CALIFORNIA OR ITS OFFICERS OR AGENTS SHALL NOT BE RESPONSIBLE FOR THE ACCURACY OR COMPLETENESS OF SCANNED COPIES OF THIS PLAN SHEET.*

## NOTES:

1. DIMENSIONS OF THE PAVEMENT STRUCTURES (STRUCTURAL SECTIONS) ARE SUBJECT TO TOLERANCES SPECIFIED IN THE STANDARD SPECIFICATIONS.
2. SUPERELEVATIONS ARE SHOWN ON THE SUPERELEVATION DIAGRAMS.
3. FOR LOCATIONS OF GUARD RAILING, SEE LAYOUT AND SUMMARY OF QUANTITY SHEETS.

## ABBREVIATIONS:

SR = SUPERELEVATION RATE

GPI = GEOSYNTHETIC PAVEMENT INTERLAYER (PAVING FABRIC) (SEE SHEET C-1 FOR DETAILS)

OGFC = HOT MIX ASPHALT-OPEN GRADED (OPEN GRADED FRICTION COURSE)

## DESIGN DESIGNATION

| | | | |
|---|---|---|---|
| ADT (2015) | 4,990 | D | 60% |
| ADT (2035) | 5,950 | T | 8% |
| DHV | 740 | V | 55 mph |
| ESAL | 2,424,000 | $TI_{20}$ | 10 |

PAVEMENT CLIMATE REGION: NORTH COAST

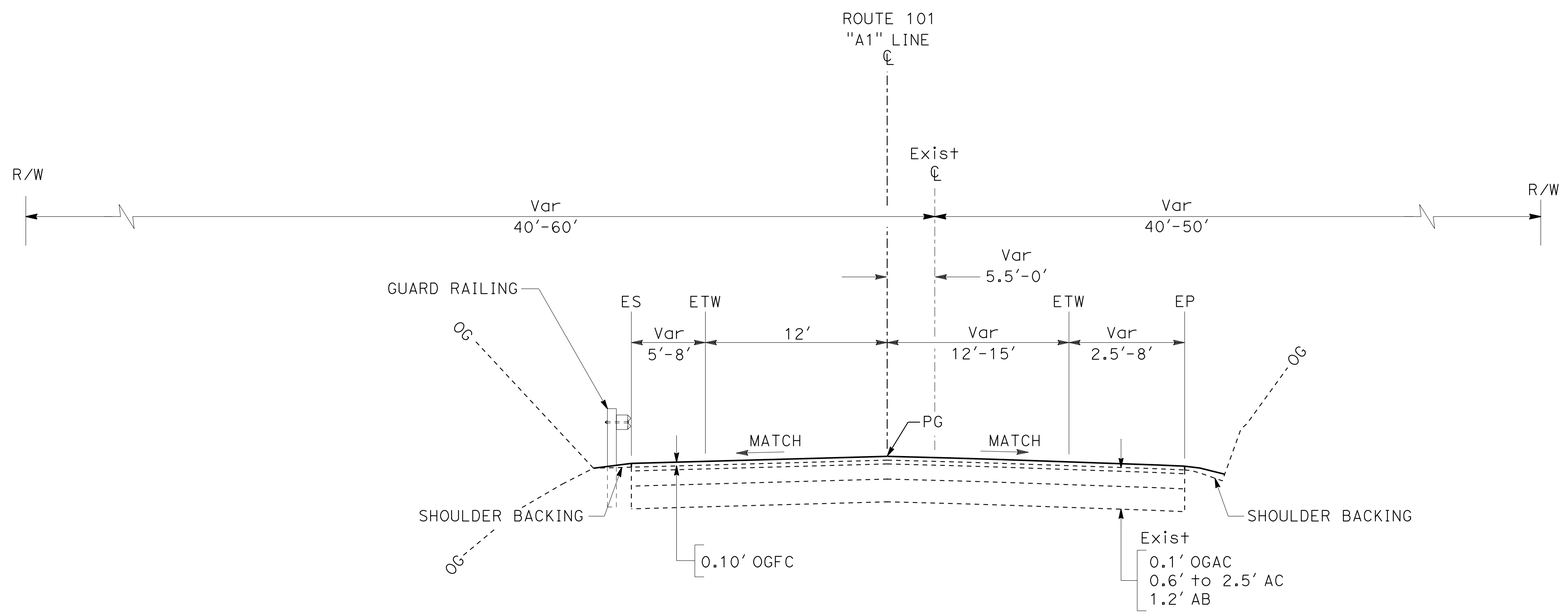


Sta "A1" 258+00 TO Sta "A1" 259+99
Sta "A1" 265+50 TO Sta "A1" 269+00

# TYPICAL CROSS SECTION X-1

NO SCALE

REVISED BY | DATE REVISED
TODD LARK | BIJAN SAMRAD
CALCULATED-DESIGNED BY | CHECKED BY
FUNCTIONAL SUPERVISOR: L.R. ASHLEY

STATE OF CALIFORNIA - DEPARTMENT OF TRANSPORTATION
Caltrans
DESIGN

P:\PROJ\01\0B280\drafting\01_0B280\01120001121ca001.dgn

LAST REVISION 12-04-15 | DATE PLOTTED => 14-JAN-2016 | TIME PLOTTED => 14:23

| Dist | COUNTY | ROUTE | POST MILES TOTAL PROJECT | SHEET No. | TOTAL SHEETS |
|---|---|---|---|---|---|
| 01 | DN | 101 | 17.4 | 3 | 74 |

REGISTERED CIVIL ENGINEER 12/04/15 DATE

January 11, 2016
PLANS APPROVAL DATE

REGISTERED PROFESSIONAL ENGINEER T. LARK No. 52481 Exp 12/31/16 CIVIL STATE OF CALIFORNIA

*THE STATE OF CALIFORNIA OR ITS OFFICERS OR AGENTS SHALL NOT BE RESPONSIBLE FOR THE ACCURACY OR COMPLETENESS OF SCANNED COPIES OF THIS PLAN SHEET.*

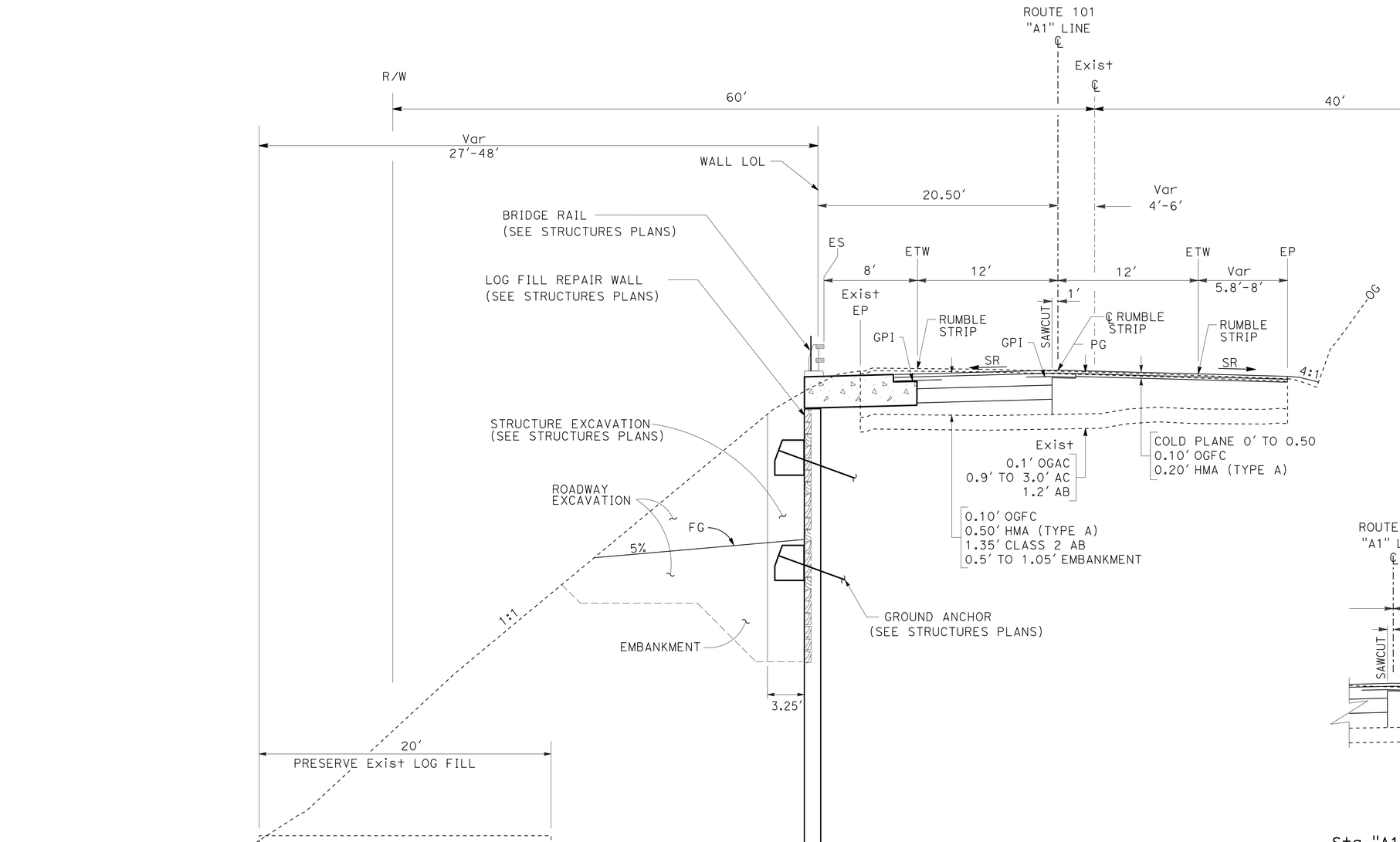


Sta "A1" 259+99 TO Sta "A1" 264+00

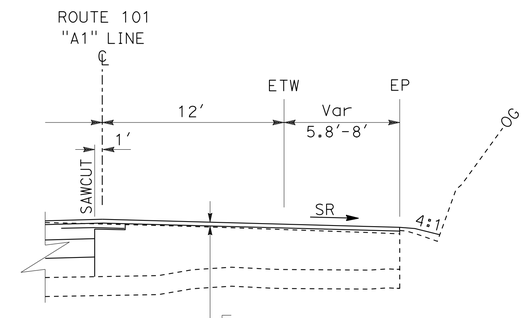


Sta "A1" 260+00, R+ TO Sta "A1" 261+00, R+

# TYPICAL CROSS SECTION X-2

NO SCALE

| REVISED BY | DATE REVISED |
|---|---|
| TODD LARK | BIJAN SAMRAD |
| CALCULATED-DESIGNED BY | CHECKED BY |
| FUNCTIONAL SUPERVISOR | L.R. ASHLEY |

STATE OF CALIFORNIA - DEPARTMENT OF TRANSPORTATION
Caltrans
DESIGN

P:\PROJ\01\0B280\drafting\01_0B280\01120001121ca002.dgn

LAST REVISION 12-04-15 | DATE PLOTTED => 14-JAN-2016 | TIME PLOTTED => 14:23

| Dist | COUNTY | ROUTE | POST MILES TOTAL PROJECT | SHEET No. | TOTAL SHEETS |
|---|---|---|---|---|---|
| 01 | DN | 101 | 17.4 | 4 | 74 |

REGISTERED CIVIL ENGINEER 12/04/15 DATE

January 11, 2016
PLANS APPROVAL DATE

REGISTERED PROFESSIONAL ENGINEER T. LARK No. 52481 Exp 12/31/16 CIVIL STATE OF CALIFORNIA

*THE STATE OF CALIFORNIA OR ITS OFFICERS OR AGENTS SHALL NOT BE RESPONSIBLE FOR THE ACCURACY OR COMPLETENESS OF SCANNED COPIES OF THIS PLAN SHEET.*

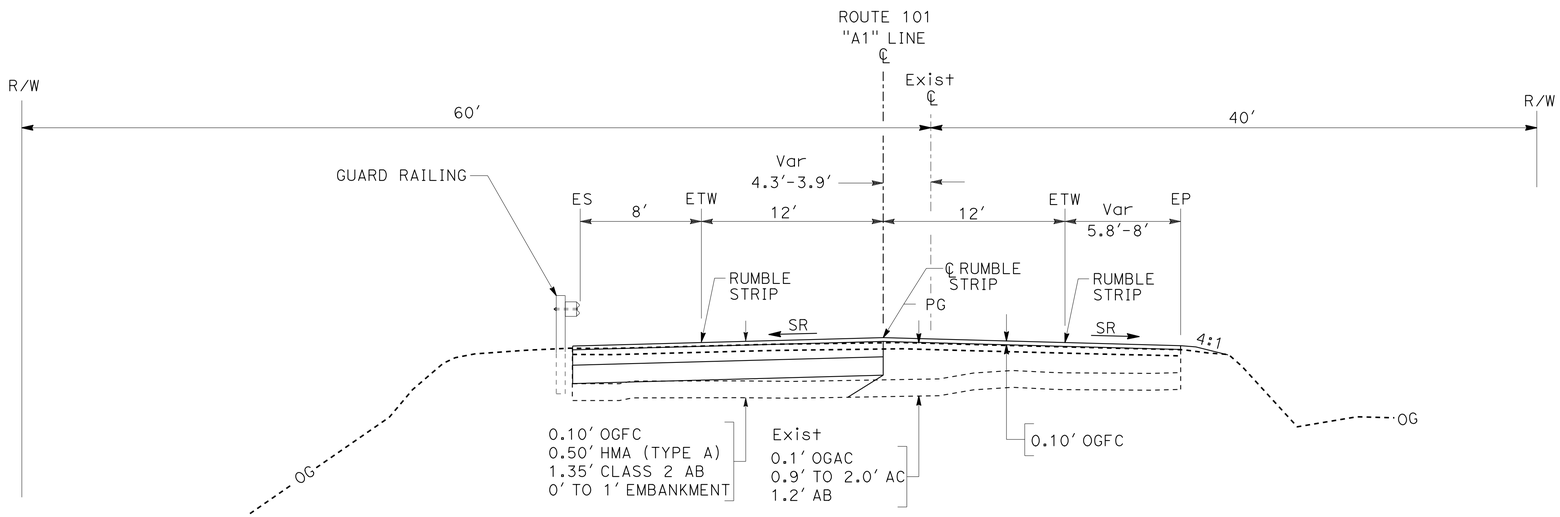


Sta "A1" 265+01 TO Sta "A1" 265+50

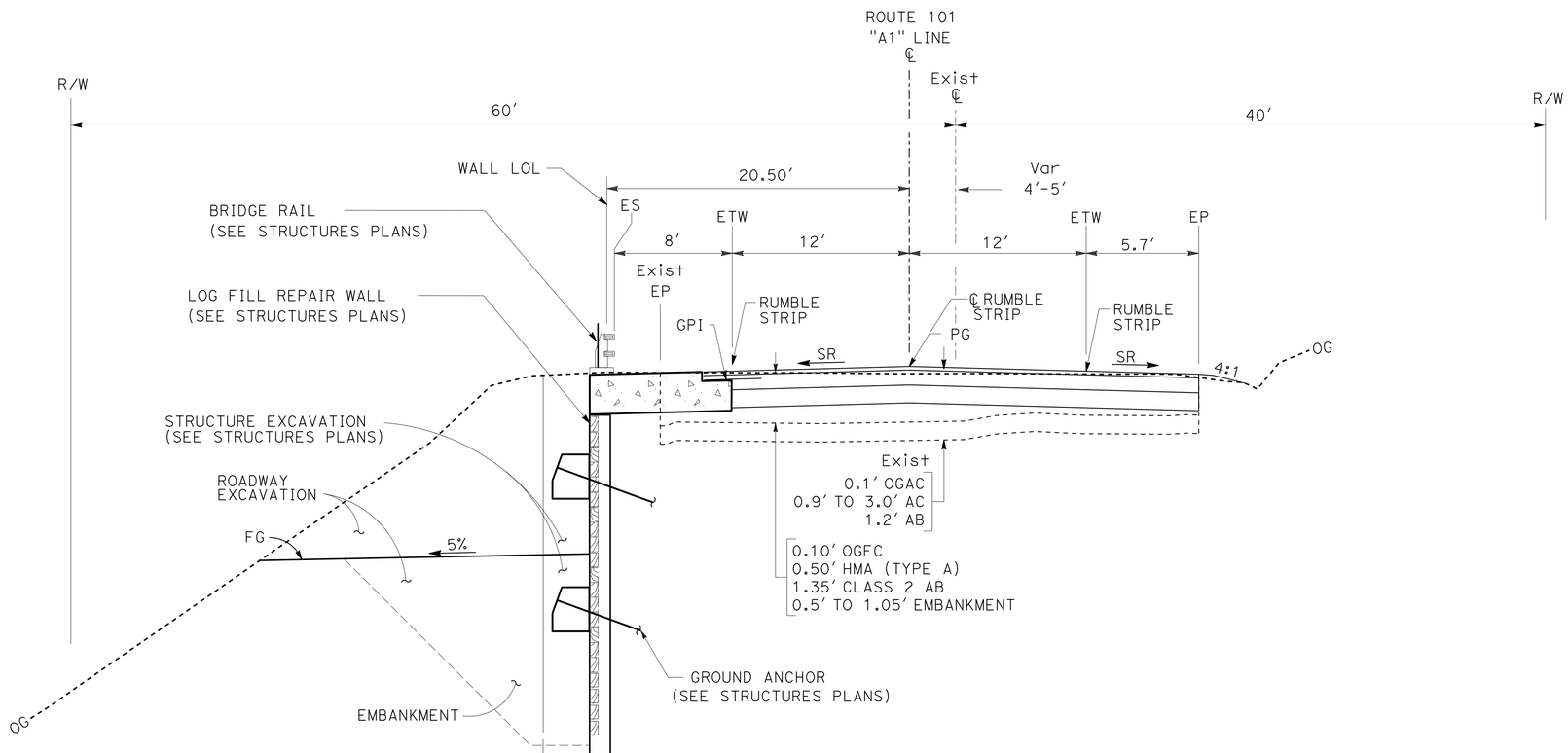


Sta "A1" 264+00 TO Sta "A1" 265+01

# TYPICAL CROSS SECTION X-3

NO SCALE

| REVISED BY | DATE REVISED |
|---|---|
| | |

| CALCULATED-DESIGNED BY | CHECKED BY |
|---|---|
| TODD LARK | BIJAN SAMRAD |

FUNCTIONAL SUPERVISOR: L.R. ASHLEY

STATE OF CALIFORNIA - DEPARTMENT OF TRANSPORTATION
Caltrans
DESIGN

P:\PROJ\01\0B280\drafting\01_0B280\01120001121ca003.dgn

LAST REVISION 12-04-15 | DATE PLOTTED => 14-JAN-2016 | TIME PLOTTED => 14:23

| Dist | COUNTY | ROUTE | POST MILES TOTAL PROJECT | SHEET No. | TOTAL SHEETS |
|---|---|---|---|---|---|
| 01 | DN | 101 | 17.4 | 5 | 74 |

REGISTERED CIVIL ENGINEER 12/04/15 DATE

January 11, 2016
PLANS APPROVAL DATE

REGISTERED PROFESSIONAL ENGINEER T. LARK No. 52481 Exp 12/31/16 CIVIL STATE OF CALIFORNIA

*THE STATE OF CALIFORNIA OR ITS OFFICERS OR AGENTS SHALL NOT BE RESPONSIBLE FOR THE ACCURACY OR COMPLETENESS OF SCANNED COPIES OF THIS PLAN SHEET.*

## NOTES:

1. FOR ACCURATE RIGHT OF WAY DATA, CONTACT RIGHT OF WAY ENGINEERING AT THE DISTRICT OFFICE.
2. ELEVATION IS BASED ON NAVD88 DATUM. COORDINATE VALUES SHOWN ARE THE 1983 CALIFORNIA COORDINATE SYSTEM, ZONE 1.
3. PRESERVE EXISTING LOG FILL.

## ABBREVIATIONS:

VPI = VERTICAL POINT OF INTERCEPTION
OGFC = HMA - HOT MIX ASPHALT - OPEN GRADED (OPEN GRADED FRICTION COURSE)

## LEGEND:

= COLD PLANE AC PAVEMENT
= TRAFFIC STRIPE DETAIL No.
= DESTROY WELL
= ROOT HEALTH ZONE
= STRUCTURAL ROOT ZONE

## CURVE DATA

| No. ⊕ | R | Δ | T | L | N | E |
|---|---|---|---|---|---|---|
| 1 | 1400′ | 03°20′44″ | 40.89′ | 81.75′ | 2497519.89 | 5983023.19 |

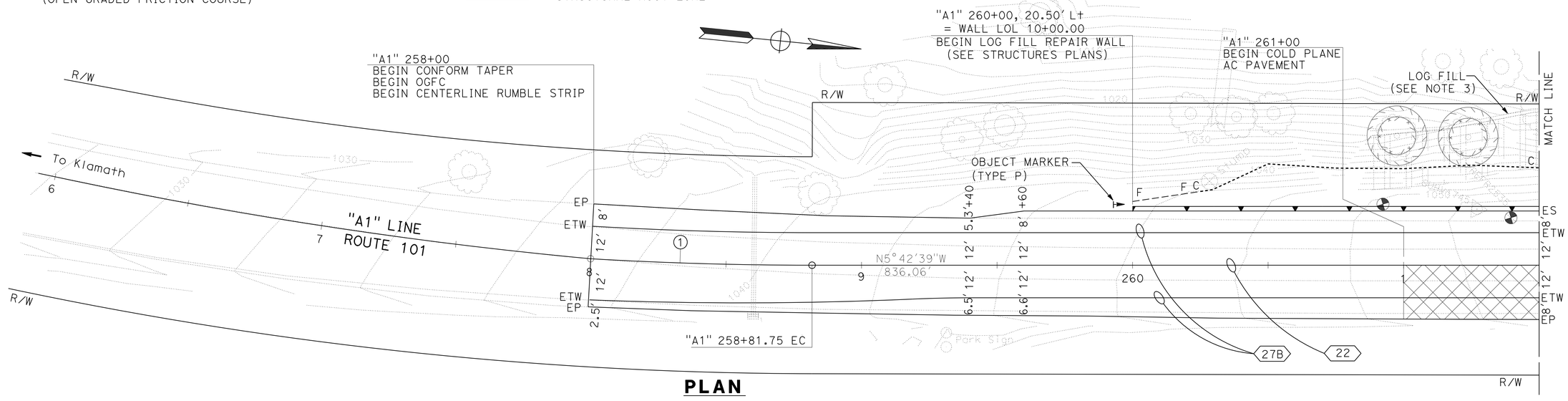


## PLAN

SCALE: 1"=20′

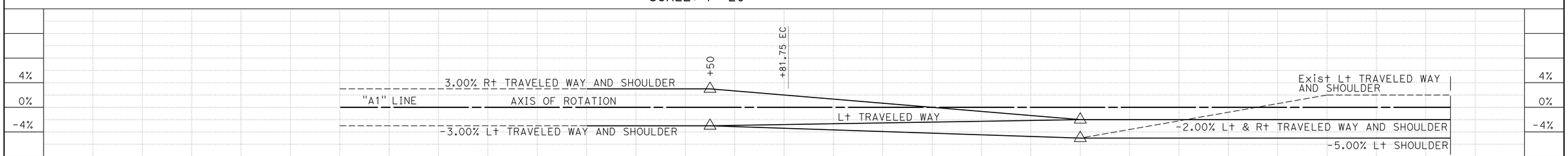


## SUPERELEVATION DIAGRAM

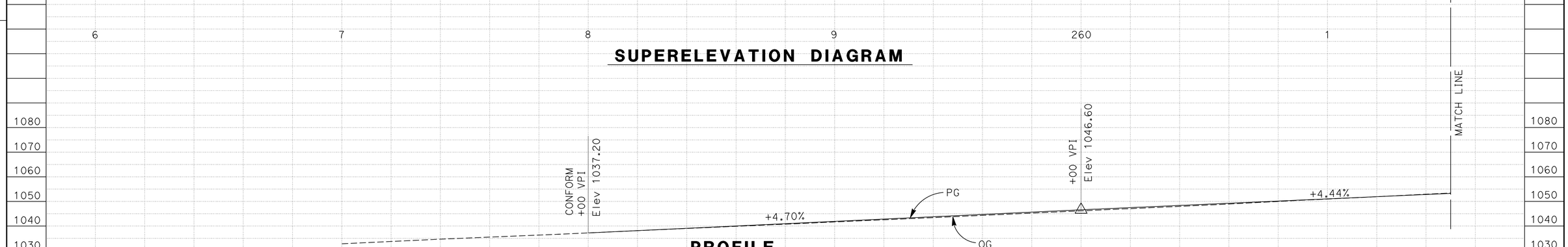


## PROFILE

SCALE: 1" = 20′ Horiz
1" = 20′ Vert

## LAYOUT L-1

SCALE: AS NOTED

| STATION | 6 | 7 | 8 | 9 | 260 | 1 | TOTAL |
|---|---|---|---|---|---|---|---|
| CY Exc | | | | | SEE L-2 | | |
| CY Emb | | | | | SEE L-2 | | |

STATE OF CALIFORNIA - DEPARTMENT OF TRANSPORTATION
Caltrans DESIGN

FUNCTIONAL SUPERVISOR: L.R. ASHLEY
CALCULATED-DESIGNED BY: TODD LARK
CHECKED BY: BIJAN SAMRAD
REVISED BY / DATE REVISED

P:\PROJ\01\0B280\drafting\01_0B280\01120001121ea001.dgn

LAST REVISION 12-04-15
DATE PLOTTED => 14-JAN-2016
TIME PLOTTED => 14:23

| Dist | COUNTY | ROUTE | POST MILES TOTAL PROJECT | SHEET No. | TOTAL SHEETS |
|---|---|---|---|---|---|
| 01 | DN | 101 | 17.4 | 6 | 74 |

REGISTERED CIVIL ENGINEER 12/04/15 DATE

January 11, 2016
PLANS APPROVAL DATE

REGISTERED PROFESSIONAL ENGINEER T. LARK No. 52481 Exp 12/31/16 CIVIL STATE OF CALIFORNIA

*THE STATE OF CALIFORNIA OR ITS OFFICERS OR AGENTS SHALL NOT BE RESPONSIBLE FOR THE ACCURACY OR COMPLETENESS OF SCANNED COPIES OF THIS PLAN SHEET.*

NOTES:

1. FOR ACCURATE RIGHT OF WAY DATA, CONTACT RIGHT OF WAY ENGINEERING AT THE DISTRICT OFFICE.
2. PRESERVE EXISTING LOG FILL.

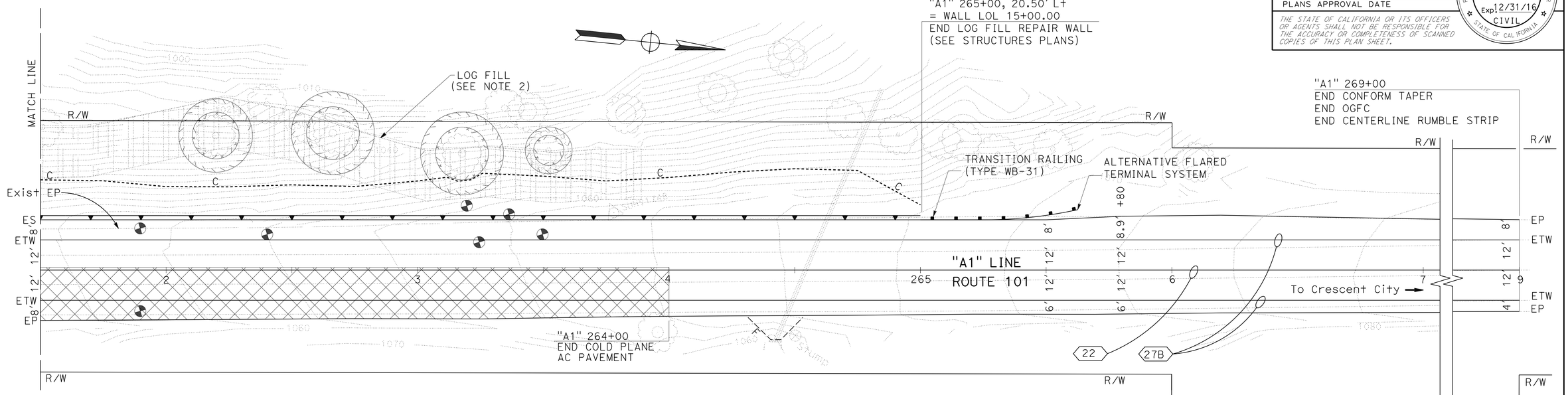


## PLAN

SCALE: 1"=20'

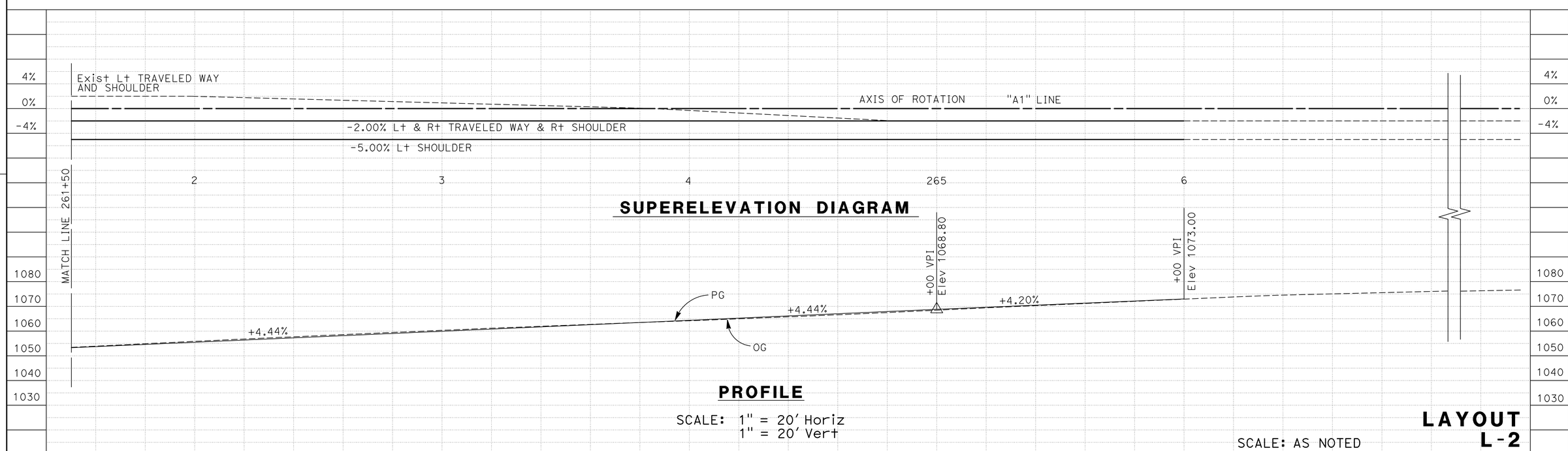


## SUPERELEVATION DIAGRAM

## PROFILE

SCALE: 1" = 20' Horiz
1" = 20' Vert

SCALE: AS NOTED

**LAYOUT L-2**

STATE OF CALIFORNIA - DEPARTMENT OF TRANSPORTATION
Caltrans DESIGN
FUNCTIONAL SUPERVISOR L.R. ASHLEY
CALCULATED-DESIGNED BY TODD LARK
CHECKED BY BIJAN SAMRAD
REVISED BY
DATE REVISED
P:\PROJ\01\0B280\drafting\01_0B280\01120001121ea002.dgn
LAST REVISION 12-04-15
DATE PLOTTED => 14-JAN-2016
TIME PLOTTED => 14:23

| Dist | COUNTY | ROUTE | POST MILES TOTAL PROJECT | SHEET No. | TOTAL SHEETS |
|---|---|---|---|---|---|
| 01 | DN | 101 | 17.4 | 7 | 74 |

REGISTERED CIVIL ENGINEER 12/04/15 DATE

January 11, 2016
PLANS APPROVAL DATE

REGISTERED PROFESSIONAL ENGINEER T. LARK No. 52481 Exp. 12/31/16 CIVIL STATE OF CALIFORNIA

*THE STATE OF CALIFORNIA OR ITS OFFICERS OR AGENTS SHALL NOT BE RESPONSIBLE FOR THE ACCURACY OR COMPLETENESS OF SCANNED COPIES OF THIS PLAN SHEET.*

ABBREVIATIONS:

GPI = GEOSYNTHETIC PAVEMENT INTERLAYER (PAVING FABRIC)

OGFC = HOT MIX ASPHALT-OPEN GRADED (OPEN GRADED FRICTION COURSE)

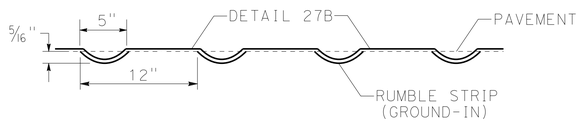


ELEVATION
**SECTION A-A**

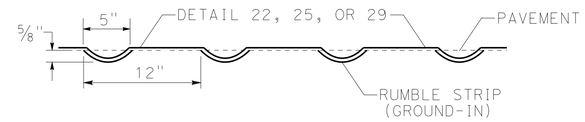


ELEVATION
**SECTION B-B**

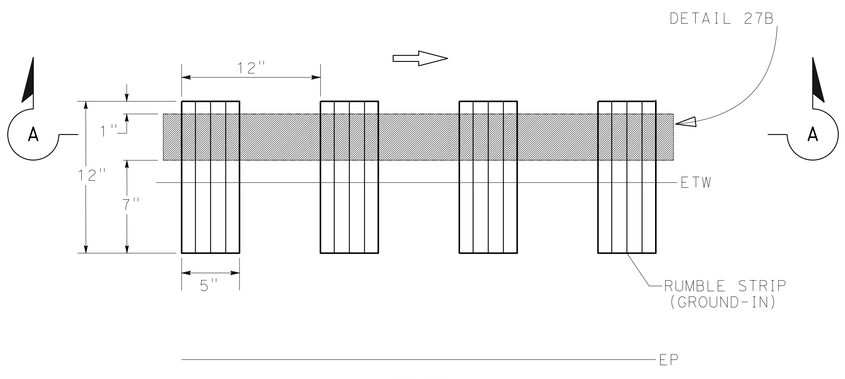


PLAN
**RUMBLE STRIP**

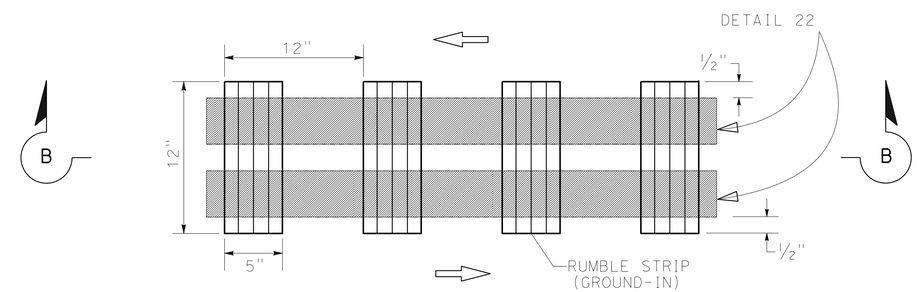


PLAN
**CENTERLINE RUMBLE STRIP**

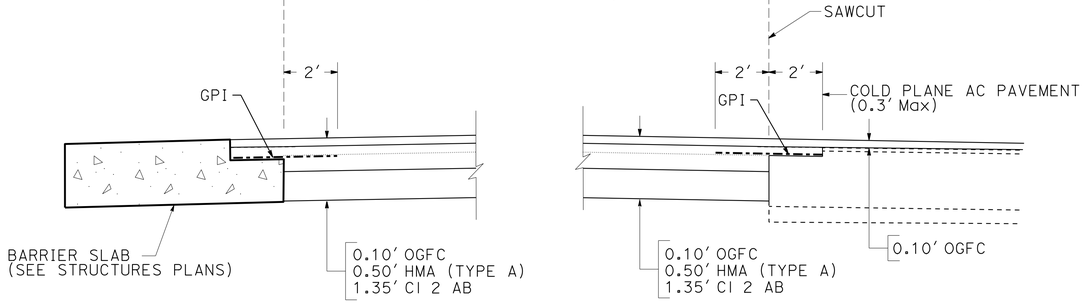


**GEOSYNTHETIC PAVEMENT INTERLAYER (PAVING FABRIC)**
**LONGITUDINAL**

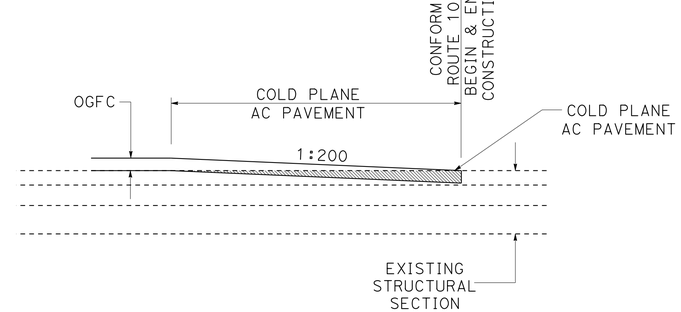


**PAVING CONFORM TAPERS**
**TRANSVERSE**

NO SCALE

# CONSTRUCTION DETAILS
**C-1**

STATE OF CALIFORNIA - DEPARTMENT OF TRANSPORTATION
Caltrans
**DESIGN**
FUNCTIONAL SUPERVISOR: L.R. ASHLEY
CALCULATED-DESIGNED BY: TODD LARK
CHECKED BY: BIJAN SAMRAD
REVISED BY
DATE REVISED
P:\PROJ\01\0B280\drafting\01_0B280\01120001121ga001.dgn

LAST REVISION 12-04-15
DATE PLOTTED => 14-JAN-2016
TIME PLOTTED => 14:23

| Dist | COUNTY | ROUTE | POST MILES TOTAL PROJECT | SHEET No. | TOTAL SHEETS |
|---|---|---|---|---|---|
| 01 | DN | 101 | 17.4 | 8 | 74 |

REGISTERED CIVIL ENGINEER 12/04/15 DATE

January 11, 2016
PLANS APPROVAL DATE

REGISTERED PROFESSIONAL ENGINEER T. LARK No. 52481 Exp. 12/31/16 CIVIL STATE OF CALIFORNIA

*THE STATE OF CALIFORNIA OR ITS OFFICERS OR AGENTS SHALL NOT BE RESPONSIBLE FOR THE ACCURACY OR COMPLETENESS OF SCANNED COPIES OF THIS PLAN SHEET.*

## NOTES:

1. GRIND EXISTING SURFACES TO ACCOMODATE A MINIMUM TAPER THICKNESS OF 0.10′ WHEN EITHER:
   A. HMA MATERIAL SUCH AS RUBBERIZED, POLYMER MODIFIED OR OPEN GRADED IS UNSUITABLE FOR RAKING TO A MAXIMUM 0.02′ THICKNESS AT THE CONFORM.
   B. TEMPORARY TAPER WILL BE IN PLACE FOR MORE THAN 14 DAYS.
2. PERMANENT SURFACE MAY BE EXISTING OR NEW PAVEMENT.
3. ROADWAY SURFACE IS THE TOP OF EXISTING SURFACE OR THE TOP OF THE PLANED SURFACE.
4. FOR TEMPORARY TAPERS ON BRIDGE DECKS AND APPROACH SLABS, CONSTRUCT TEMPORARY TAPERS WITH POLYESTER CONCRETE.
5. IF AUTHORIZED, YOU MAY USE ALTERNATIVE MATERIALS OR METHODS TO PRODUCE THE REQUIRED TAPER.

## LEGEND:

HMA MATERIAL (TEMPORARY TAPER) (SEE NOTE 4)

IF NECESSARY, COLD PLANE ASPHALT CONCRETE PAVEMENT AND PLACE HMA MATERIAL (SEE NOTE 1)

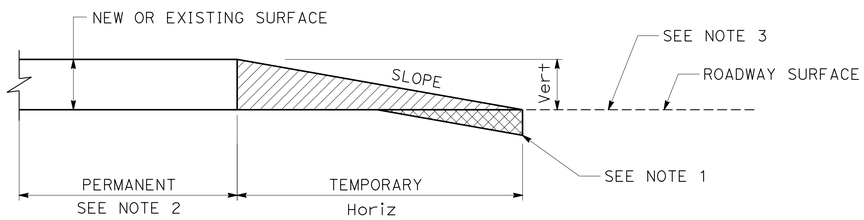


| Vert | SLOPE RATIO Horiz/Vert |
|---|---|
| 0-0.10′ | 70:1 |
| GREATER THAN 0.10′ | 160:1 |

# TYPICAL PAVING CONFORM FOR TEMPORARY CONSTRUCTION TAPERS

NO SCALE

## CONSTRUCTION DETAILS
## C-2

REVISED BY | DATE REVISED
TODD LARK | BIJAN SAMRAD
CALCULATED-DESIGNED BY | CHECKED BY
FUNCTIONAL SUPERVISOR: L.R. ASHLEY

STATE OF CALIFORNIA - DEPARTMENT OF TRANSPORTATION
Caltrans® DESIGN

P:\PROJ\01\OB280\draffing\01_OB280\01120001121ga002.dgn

LAST REVISION 12-04-15 | DATE PLOTTED => 14-JAN-2016 | TIME PLOTTED => 14:23

| Dist | COUNTY | ROUTE | POST MILES TOTAL PROJECT | SHEET No. | TOTAL SHEETS |
|---|---|---|---|---|---|
| 01 | DN | 101 | 17.4 | 9 | 74 |

REGISTERED CIVIL ENGINEER 12/04/15 DATE

January 11, 2016
PLANS APPROVAL DATE

REGISTERED PROFESSIONAL ENGINEER T. LARK No. 52481 Exp 12/31/16 CIVIL STATE OF CALIFORNIA

*THE STATE OF CALIFORNIA OR ITS OFFICERS OR AGENTS SHALL NOT BE RESPONSIBLE FOR THE ACCURACY OR COMPLETENESS OF SCANNED COPIES OF THIS PLAN SHEET.*

NOTE:

FOR ACCURATE RIGHT OF WAY DATA, CONTACT RIGHT OF WAY ENGINEERING AT THE DISTRICT OFFICE.

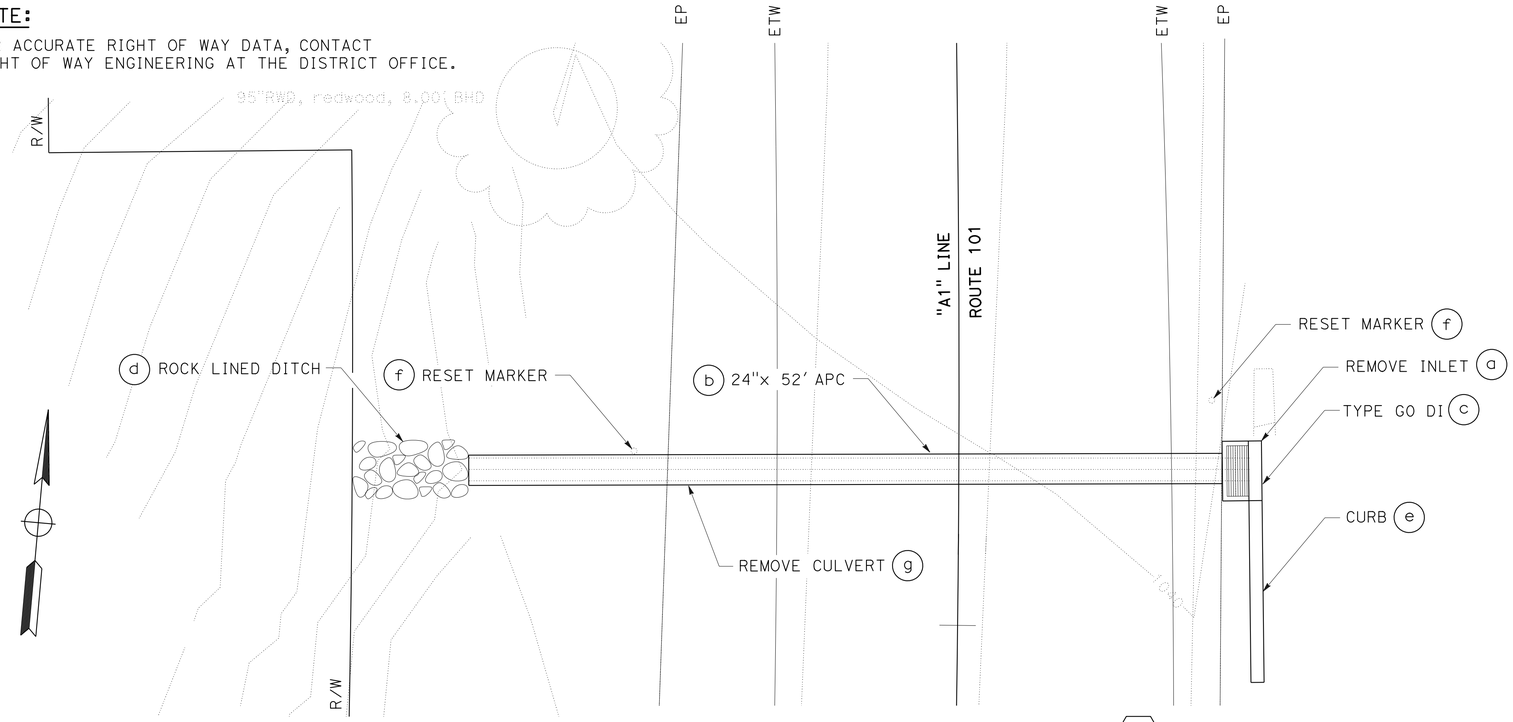


**DRAINAGE SYSTEM No. 1**

"A1" 258+60.3, PM 17.41

SCALE: 1'=5'

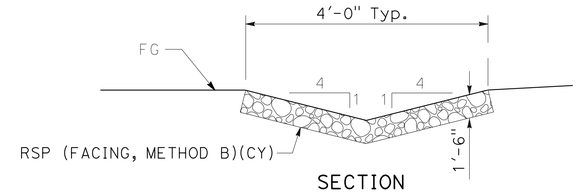


SECTION

**ROCK LINED DITCH**

No Scale

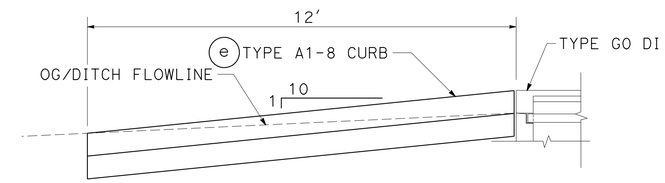


PROFILE

**TYPE A1-8 CURB TO TYPE GO DI CONFORM**

No Scale

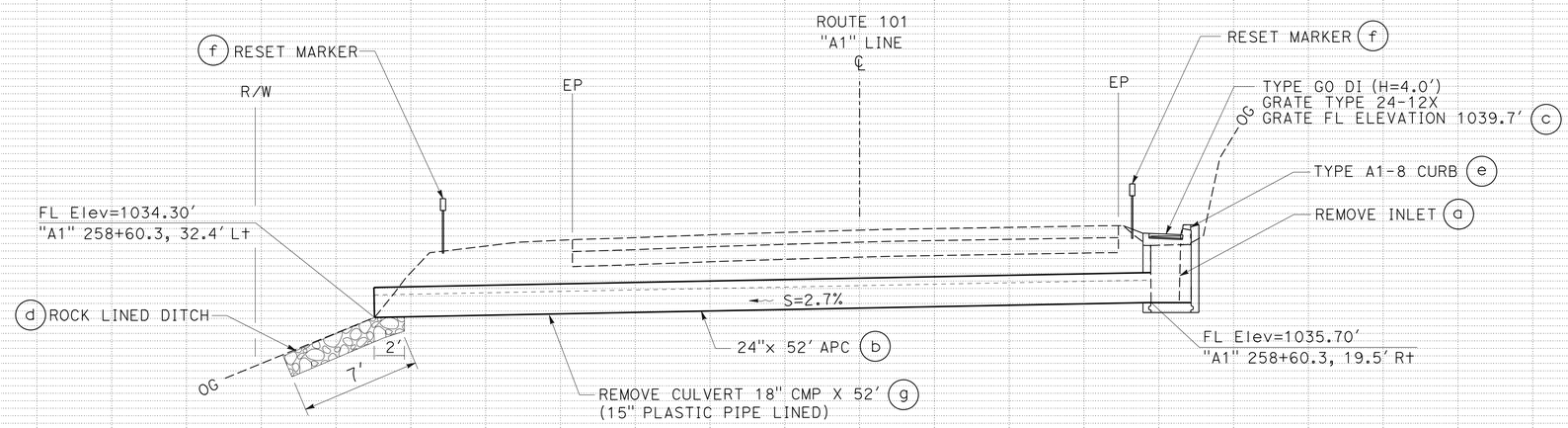


**DRAINAGE SYSTEM No. 1**

"A1" 258+60.3, PM 17.41

SKEW 0°

SCALE: 1" = 5' Horiz
1" = 5' Vert

# DRAINAGE PLAN, PROFILE AND DETAILS

**D-1**

| REVISED BY | DATE REVISED |
|---|---|
| TODD LARK | BIJAN SAMRAD |
| CALCULATED-DESIGNED BY | CHECKED BY |
| FUNCTIONAL SUPERVISOR | L.R. ASHLEY |

STATE OF CALIFORNIA - DEPARTMENT OF TRANSPORTATION **DESIGN**

Caltrans

P:\PROJ\01\0B280\drafting\01_0B280\01120001121ia001.dgn

LAST REVISION | DATE PLOTTED => 14-JAN-2016 | TIME PLOTTED => 14:23

12-04-15

| Dist | COUNTY | ROUTE | POST MILES TOTAL PROJECT | SHEET No. | TOTAL SHEETS |
|---|---|---|---|---|---|
| 01 | DN | 101 | 17.4 | 10 | 74 |

REGISTERED CIVIL ENGINEER 12/04/15 DATE

January 11, 2016
PLANS APPROVAL DATE

REGISTERED PROFESSIONAL ENGINEER T. LARK No. 52481 Exp. 12/31/16 CIVIL STATE OF CALIFORNIA

*THE STATE OF CALIFORNIA OR ITS OFFICERS OR AGENTS SHALL NOT BE RESPONSIBLE FOR THE ACCURACY OR COMPLETENESS OF SCANNED COPIES OF THIS PLAN SHEET.*

NOTES:

1. FOR ACCURATE RIGHT OF WAY DATA, CONTACT RIGHT OF WAY ENGINEERING AT THE DISTRICT OFFICE.
2. PRESERVE EXISTING PLASTIC LINER.

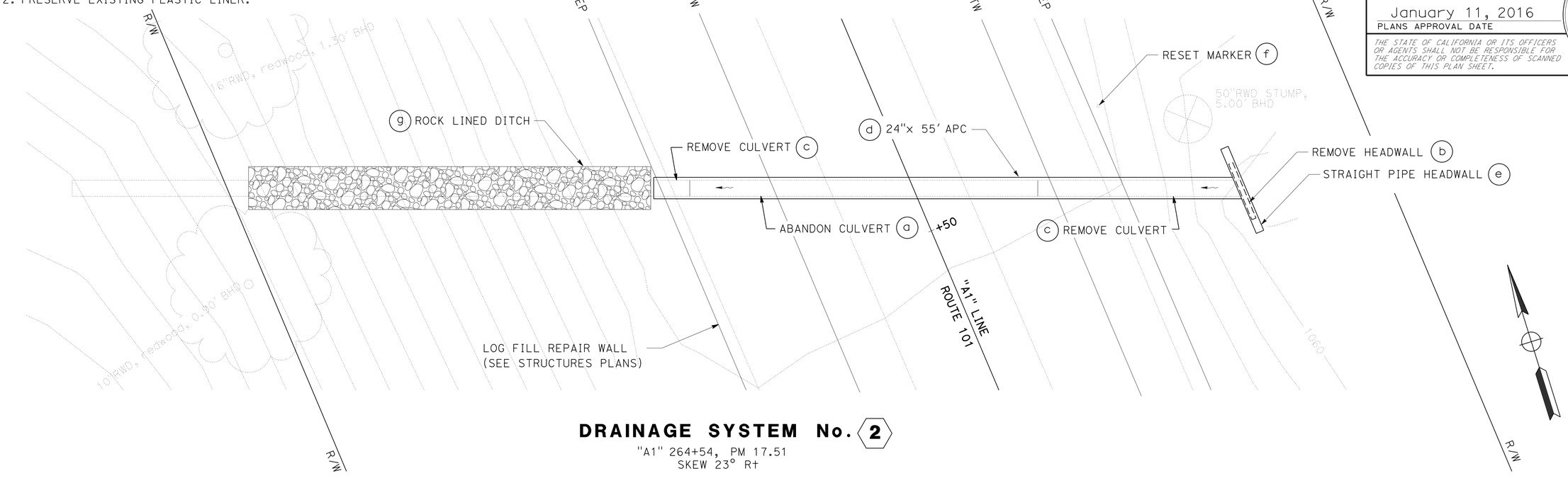


## DRAINAGE SYSTEM No. 2

"A1" 264+54, PM 17.51
SKEW 23° Rt

SCALE: 1'=5'

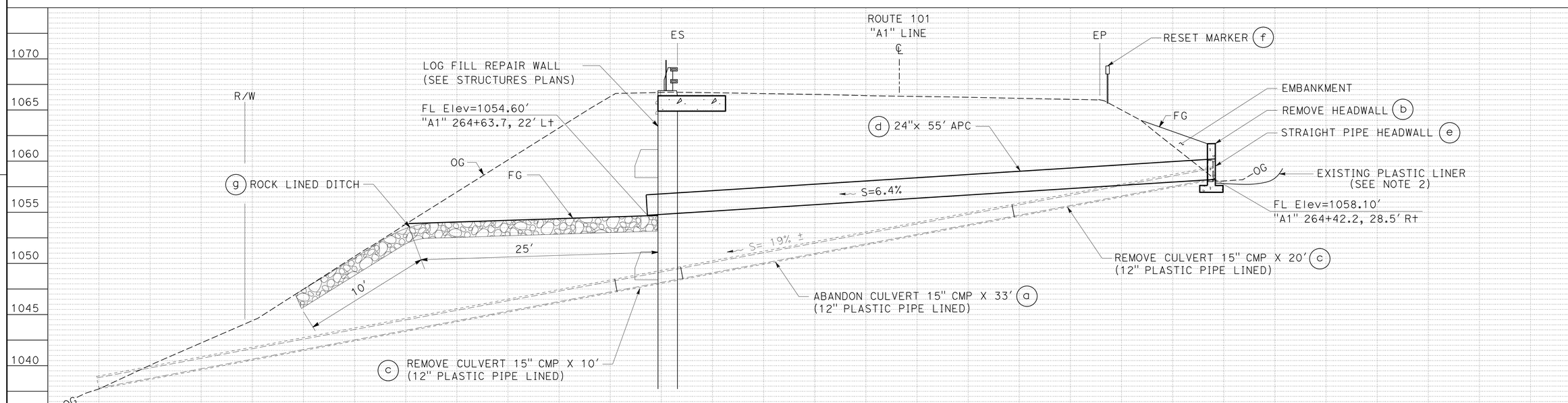


## DRAINAGE SYSTEM No. 2

"A1" 264+54, PM 17.51
SKEW 23° Rt

SCALE: 1" = 5' Horiz
1" = 5' Vert

# DRAINAGE PLAN AND PROFILE

D-2

REVISED BY | DATE REVISED
TODD LARK | BIJAN SAMRAD
CALCULATED-DESIGNED BY | CHECKED BY
FUNCTIONAL SUPERVISOR: L.R. ASHLEY

STATE OF CALIFORNIA - DEPARTMENT OF TRANSPORTATION
Caltrans DESIGN

P:\PROJ\01\0B280\drafting\01_0B280\01120001121ia002.dgn

LAST REVISION 12-04-15 | DATE PLOTTED => 14-JAN-2016 | TIME PLOTTED => 14:23

| Dist | COUNTY | ROUTE | POST MILES TOTAL PROJECT | SHEET No. | TOTAL SHEETS |
|---|---|---|---|---|---|
| 01 | DN | 101 | 17.4 | 11 | 74 |

REGISTERED CIVIL ENGINEER 12/04/15 DATE

January 11, 2016
PLANS APPROVAL DATE

REGISTERED PROFESSIONAL ENGINEER T. LARK No. 52481 Exp. 12/31/16 CIVIL STATE OF CALIFORNIA

*THE STATE OF CALIFORNIA OR ITS OFFICERS OR AGENTS SHALL NOT BE RESPONSIBLE FOR THE ACCURACY OR COMPLETENESS OF SCANNED COPIES OF THIS PLAN SHEET.*

# DRAINAGE QUANTITIES

| LOCATION | DRAINAGE SYSTEM NUMBER ⬡ | DRAINAGE UNIT ◯ | REMOVE CULVERT (LF) | REMOVE INLET | REMOVE HEADWALL | ABANDON CULVERT (LF) | 24" APC | (N) INLET HEIGHT "H" | MINOR CONCRETE (MINOR STRUCTURE) | MINOR CONCRETE (CURB) (CY) | MISCELLANEOUS IRON AND STEEL | RSP (FACING, METHOD B) (CY) | RESET MARKER | REMARKS |
|---|---|---|---|---|---|---|---|---|---|---|---|---|---|---|
| | | | LF | EA | EA | LF | LF | LF | CY | CY | LB | CY | EA | |
| "A1" 258+60.3 | 1 | a | | 1 | | | | | | | | | | |
| | | b | | | | | 52 | | | | | | | |
| | | c | | | | | | 4.0 | 1.49 | | 239 | | | TYPE GO DI, TYPE 24-12X GRATE |
| | | d | | | | | | | | | | 2 | | |
| | | e | | | | | | | | 0.37 | | | | TYPE A1-8 |
| | | f | | | | | | | | | | | 2 | PM 17.40 |
| | | g | 52 | | | | | | | | | | | |
| "A1" 264+54 | 2 | a | | | | 33 | | | | | | | | |
| | | b | | | 1 | | | | | | | | | |
| | | c | 30 | | | | | | | | | | | |
| | | d | | | | | 55 | | | | | | | |
| | | e | | | | | | | 1.20 | | | | | STRAIGHT PIPE HEADWALL |
| | | f | | | | | | | | | | | 1 | PM 17.51 |
| | | g | | | | | | | | | | 8 | | |
| TOTAL | | | 82 | 1 | 1 | 33 | 107 | | 2.69 | 0.37 | 239 | 10 | 3 | |

(N) - NOT A SEPARATE PAY ITEM, FOR INFORMATION ONLY

## APC ALLOWABLE ALTERNATIVES

| SYSTEM NUMBER ⬡ | DRAINAGE UNIT ◯ | PLASTIC PIPE (TYPE S) | CSP GALVANIZED (0.109" THICK) | CSP GALVANIZED (0.079" THICK) POLYMERIC SHEET COATED | ALUMINUM (0.075" THICK) |
|---|---|---|---|---|---|
| 1 | b | X | X | X | X |
| 2 | d | X | X | X | X |

# DRAINAGE QUANTITIES
# DQ-1

TODD LARK — REVISED BY
BIJAN SAMRAD — DATE REVISED
CALCULATED-DESIGNED BY
CHECKED BY
FUNCTIONAL SUPERVISOR
L.R. ASHLEY

STATE OF CALIFORNIA - DEPARTMENT OF TRANSPORTATION
Caltrans
DESIGN

P:\PROJ\01\0B280\drafting\01_0B280\01120001121id001.dgn

LAST REVISION | DATE PLOTTED => 14-JAN-2016
12-04-15 | TIME PLOTTED => 14:24

| Dist | COUNTY | ROUTE | POST MILES TOTAL PROJECT | SHEET No. | TOTAL SHEETS |
|---|---|---|---|---|---|
| 01 | DN | 101 | 17.4 | 12 | 74 |

REGISTERED CIVIL ENGINEER 12/04/15 DATE

January 11, 2016
PLANS APPROVAL DATE

REGISTERED PROFESSIONAL ENGINEER T. LARK No. 52481 Exp. 12/31/16 CIVIL STATE OF CALIFORNIA

*THE STATE OF CALIFORNIA OR ITS OFFICERS OR AGENTS SHALL NOT BE RESPONSIBLE FOR THE ACCURACY OR COMPLETENESS OF SCANNED COPIES OF THIS PLAN SHEET.*

# STATIONARY MOUNTED CONSTRUCTION AREA SIGNS

| SIGN ◯ | SIGN CODE | SIGN MESSAGE | PANEL SIZE | NUMBER AND SIZE OF POSTS | NUMBER OF SIGNS | REMARKS |
|---|---|---|---|---|---|---|
| A | C40-(CA) | TRAFFIC FINES DOUBLED IN CONSTRUCTION ZONES | 108" x 42" | 2 - 6" x 6" | 2 | |
| B | W20-1 | ROAD WORK AHEAD | 36" x 36" | WOOD POLE | 2 | SEE ELECTRICAL PLANS |
| C | R4-11 | "BIKES MAY USE FULL LANE" | 30" x 30" | 1 - 4" x 6" | 2 | |
| D | G20-2 | END ROAD WORK | 36" x 18" | 1 - 4" x 4" | 2 | |
| F | W20-4 | ONE LANE ROAD AHEAD | 36" x 36" | WOOD POLE | 2 | SEE ELECTRICAL PLANS |
| | C29-(CA) | 1000 FT | 24" x 12" | | | |
| G | W3-3 | SIGNAL AHEAD SYMBOL | 36" x 36" | WOOD POLE | 2 | SEE ELECTRICAL PLANS |
| | C29-(CA) | 500 FT | 24" x 12" | | | |
| H | R10-6 | STOP HERE ON RED | 24" x 36" | 1 - 4" x 6" | 2 | |
| I | W1-4 | REVERSE CURVE SYMBOL | 36" x 36" | 1 - 4" x 6" | 1 | |

## NOTES:

1. EXACT SIGN LOCATIONS TO BE DETERMINED BY THE ENGINEER.
2. FOR ADDITIONAL STATIONARY MOUNTED CONSTRUCTION AREA SIGNS SEE TH-1 AND E-1 SHEETS.
3. (CA) = CALIFORNIA SIGN CODE

## LEGEND:

Temp FLASHING BEACON (SEE ELECTRICAL PLANS)

* WOOD POLE REQUIRES PROTECTION

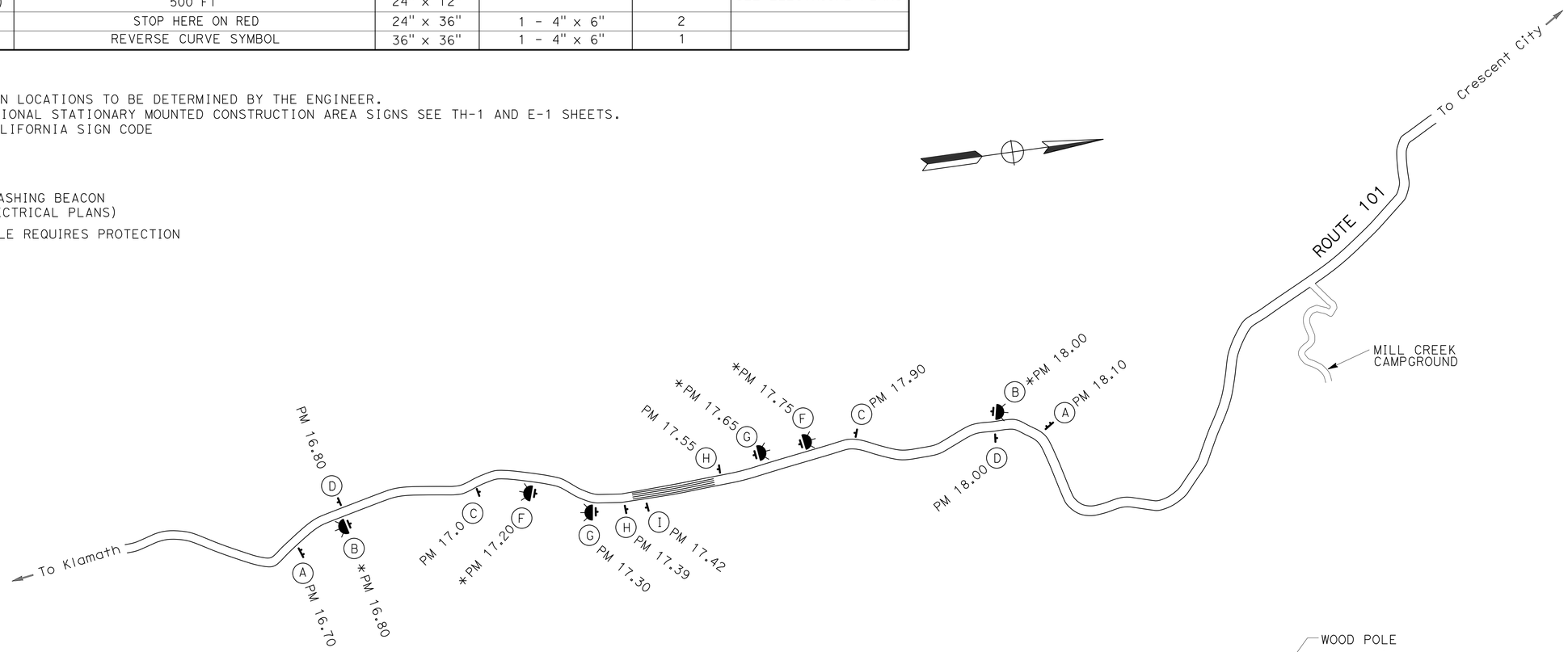


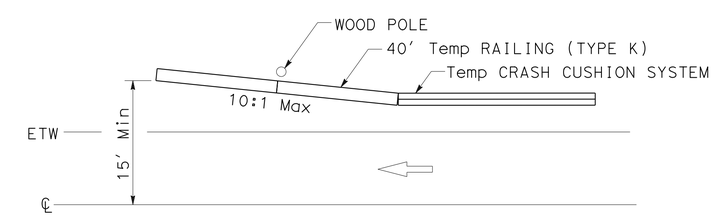


**WOOD POLE PROTECTION DETAIL**

*APPROVED FOR CONSTRUCTION AREA SIGN WORK ONLY*

NO SCALE

# CONSTRUCTION AREA SIGNS
# CS-1

REVISED BY | DATE REVISED
TODD LARK | BIJAN SAMRAD
CALCULATED-DESIGNED BY | CHECKED BY
FUNCTIONAL SUPERVISOR: L.R. ASHLEY

STATE OF CALIFORNIA - DEPARTMENT OF TRANSPORTATION
Caltrans
DESIGN

P:\PROJ\01\0B280\drafting\01_0B280\01120001121ia001.dgn

LAST REVISION 12-04-15 | DATE PLOTTED => 14-JAN-2016 | TIME PLOTTED => 14:24

| Dist | COUNTY | ROUTE | POST MILES TOTAL PROJECT | SHEET No. | TOTAL SHEETS |
|---|---|---|---|---|---|
| 01 | DN | 101 | 17.4 | 13 | 74 |

REGISTERED CIVIL ENGINEER 12/04/15 DATE

January 11, 2016
PLANS APPROVAL DATE

REGISTERED PROFESSIONAL ENGINEER T. LARK No. 52481 Exp. 12/31/16 CIVIL STATE OF CALIFORNIA

*THE STATE OF CALIFORNIA OR ITS OFFICERS OR AGENTS SHALL NOT BE RESPONSIBLE FOR THE ACCURACY OR COMPLETENESS OF SCANNED COPIES OF THIS PLAN SHEET.*

LEGEND:

- CHANNELIZER (SURFACE MOUNTED)
- DIRECTION OF TRAVEL
- TYPE III BARRICADE
- TRAFFIC STRIPE DETAIL No.
- CONSTRUCTION AREA SIGN (SEE CS-1 SHEET)
- TEMPORARY CRASH CUSHION SYSTEM
- TEMPORARY RAILING (TYPE K)

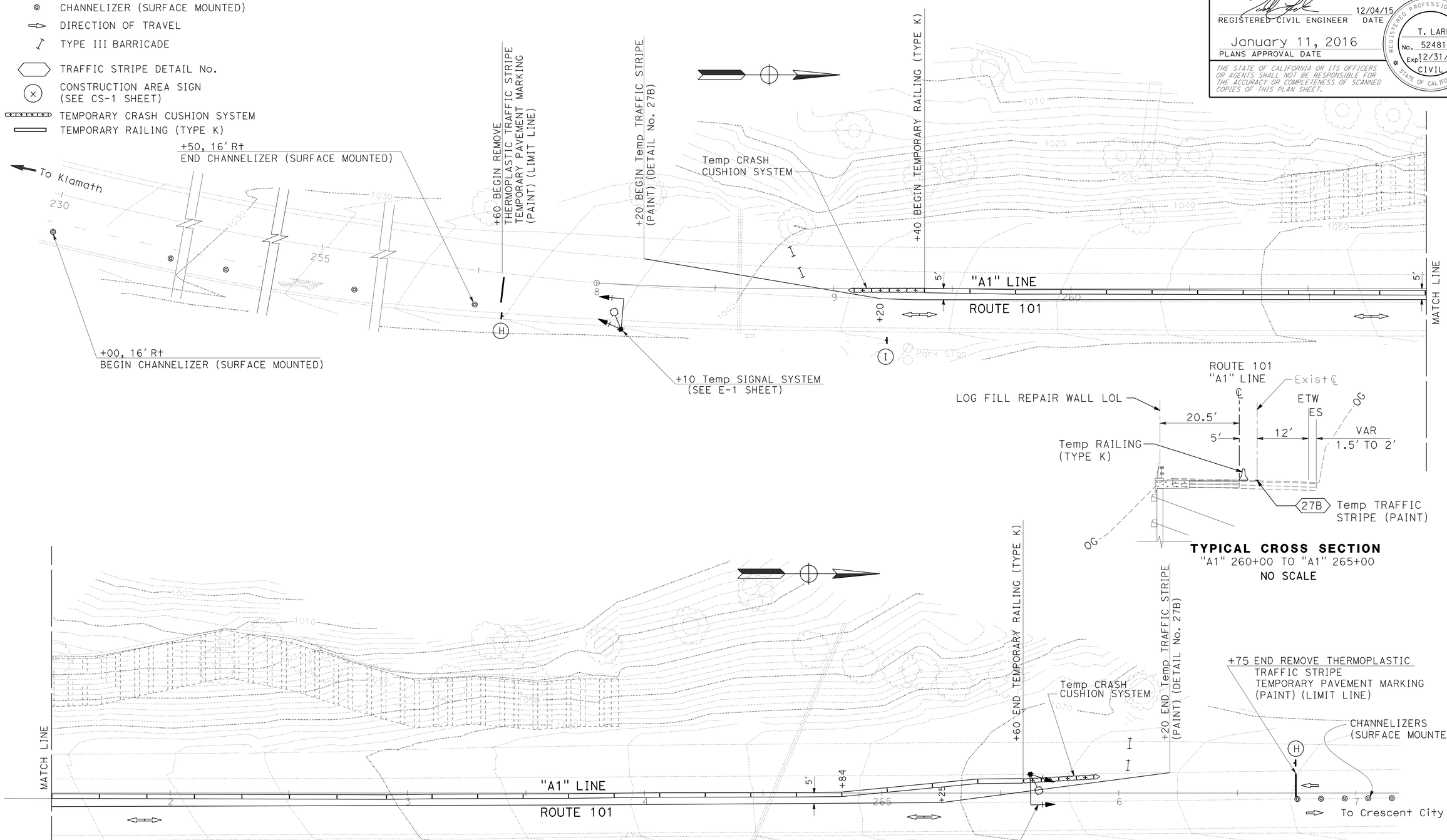


# TRAFFIC HANDLING PLAN
# TH-1

SCALE: 1"=20'

*APPROVED FOR TRAFFIC HANDLING WORK ONLY*

| REVISED BY | DATE REVISED |
|---|---|
| TODD LARK | BIJAN SAMRAD |
| CALCULATED-DESIGNED BY | CHECKED BY |
| FUNCTIONAL SUPERVISOR | L.R. ASHLEY |

STATE OF CALIFORNIA - DEPARTMENT OF TRANSPORTATION
Caltrans
DESIGN

P:\PROJ\01\0B280\drafting\01_0B280\01120001121md001.dgn

LAST REVISION 12-04-15 | DATE PLOTTED => 14-JAN-2016 | TIME PLOTTED => 14:24

| Dist | COUNTY | ROUTE | POST MILES TOTAL PROJECT | SHEET No. | TOTAL SHEETS |
|---|---|---|---|---|---|
| 01 | DN | 101 | 17.4 | 14 | 74 |

REGISTERED CIVIL ENGINEER Sheri M. Rodriguez 3-5-15 DATE

PLANS APPROVAL DATE January 11, 2015

REGISTERED PROFESSIONAL ENGINEER SHERI M. RODRIGUEZ No. C66861 Exp. 9-30-16 CIVIL STATE OF CALIFORNIA

*THE STATE OF CALIFORNIA OR ITS OFFICERS OR AGENTS SHALL NOT BE RESPONSIBLE FOR THE ACCURACY OR COMPLETENESS OF SCANNED COPIES OF THIS PLAN SHEET.*

## NOTES:

1. CALIFORNIA CODES ARE DESIGNATED BY (CA). OTHERWISE, FEDERAL (MUTCD) CODES ARE SHOWN.
2. ALL SIGNS SHALL HAVE A BLACK LEGEND ON FLUORESCENT ORANGE BACKGROUND AND SHALL BE EQUIPPED WITH AT LEAST TWO 16" x 16" ORANGE FLAGS FOR DAYTIME CLOSURE OR FLASHING BEACONS FOR LANE CLOSURE DURING HOURS OF DARKNESS.
3. ALL CONES USED FOR LANE CLOSURES DURING THE HOURS OF DARKNESS SHALL BE FITTED WITH RETROREFLECTIVE BANDS OR SLEEVES.
4. WHEN A PILOT CAR IS USED, PLACE A C37 (CA) SIGN AT ALL INTERSECTIONS WITHIN TRAFFIC CONTROL AREA. WHERE VEHICULAR TRAFFIC CAN NOT EFFECTIVELY SELF-REGULATE, AT LEAST ONE FLAGGER SHALL BE USED AT EACH INTERSECTION WITHIN THE TRAFFIC CONTROL AREA.
5. FLAGGER SHOULD STAND IN A CONSPICUOUS PLACE, FACING TRAFFIC AT ALL TIMES, BE VISIBLE TO APPROACHING TRAFFIC AS WELL AS APPROACHING VEHICLES AFTER THE FIRST VEHICLE HAS STOPPED.
6. ADDITIONAL ADVANCE FLAGGERS ARE REQUIRED.
7. WHEN FLAGGER IS NOT VISIBLE FROM THIS LOCATION PLACE A C29 (CA) SIGN BELOW THE C9A (CA) SIGN.

## LEGEND

- TRAFFIC CONE
- TEMPORARY SIGN
- DIRECTION OF TRAVEL
- PORTABLE FLASHING BEACON
- FLAGGER

## SIGN PANEL SIZE (MINIMUM)

| | |
|---|---|
| A | 48" x 48" - SPEED OF 45 mph OR MORE<br>36" x 36" - SPEED LESS THAN 45 mph |
| B | 30" x 30" |
| C | UNUSED |
| D | UNUSED |
| E | 20" x 7" |

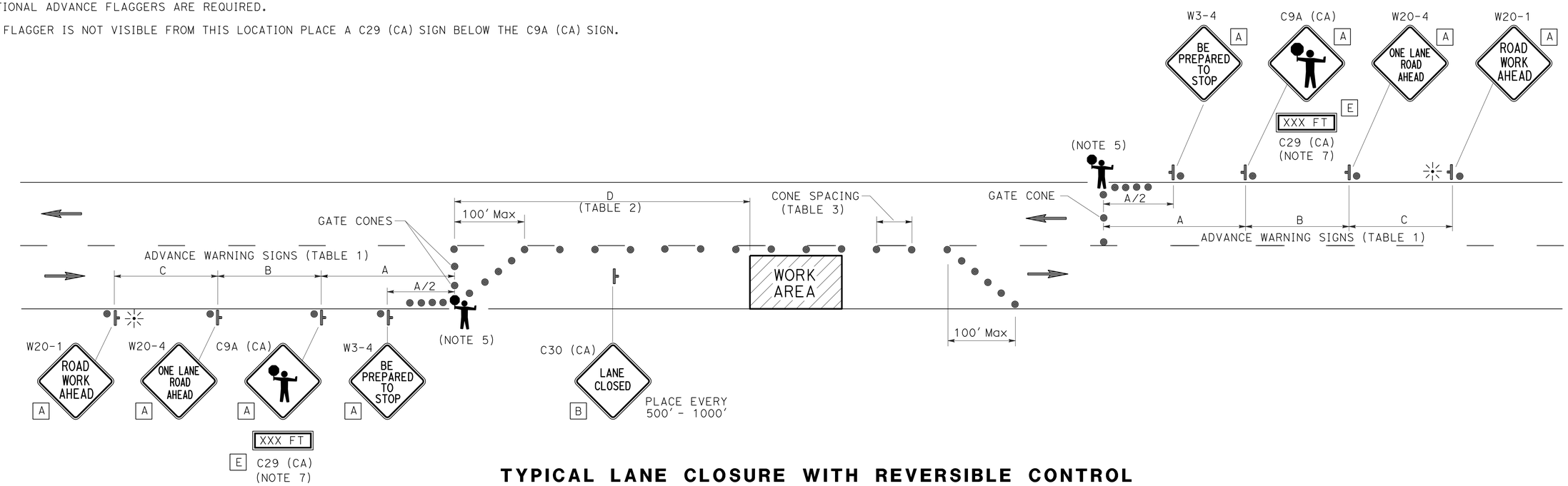


## TYPICAL LANE CLOSURE WITH REVERSIBLE CONTROL

### TABLE 1

ADVANCE WARNING SIGN SPACING

| ROAD TYPE | Min A | Min B | Min C |
|---|---|---|---|
| | ft | | |
| URBAN (25 mph OR LESS) | 100 | 100 | 100 |
| URBAN (30 mph TO 40 mph) | 250 | 250 | 250 |
| URBAN (MORE THAN 40 mph) | 350 | 350 | 350 |
| RURAL | 500 | 500 | 500 |
| EXPRESSWAY / FREEWAY | 1000 | 1500 | 2640 |

### TABLE 2

BUFFER SPACE

| APPROACH SPEED | Min D | DOWNGRADE Min D | | |
|---|---|---|---|---|
| | | -3%* | -6%* | -9%* |
| mph | ft | | | |
| 25 & BELOW | 155 | 158 | 165 | 173 |
| 30 | 200 | 205 | 215 | 227 |
| 35 | 250 | 257 | 271 | 287 |
| 40 | 305 | 315 | 333 | 354 |
| 45 | 360 | 378 | 400 | 427 |
| 50 | 425 | 446 | 474 | 507 |
| 55 | 495 | 520 | 553 | 593 |
| 60 | 570 | 598 | 638 | 686 |
| 65 | 645 | 682 | 728 | 785 |

* USE ON SUSTAINED DOWNGRADE STEEPER THAN -3 PERCENT AND LONGER THAN 1 MILE.

### TABLE 3

Max CONE SPACING

| POSTED SPEED | TAPER | TANGENT | CONFLICT* |
|---|---|---|---|
| mph | ft | | |
| 20 | 20 | 40 | 10 |
| 25 | 25 | 50 | 12 |
| 30 | 30 | 60 | 15 |
| 35 | 35 | 70 | 17 |
| 40 | 40 | 80 | 20 |
| 45 | 45 | 90 | 22 |
| 50 | 50 | 100 | 25 |
| 55 | 55 | 110 | 27 |
| 60 | 60 | 120 | 30 |
| 65 | 65 | 130 | 32 |

* USE WHERE THERE IS A CONFLICT BETWEEN EXISTING PAVEMENT MARKINGS AND CHANNELIZERS.

# TRAFFIC HANDLING PLAN TH-2

NOT TO SCALE

*APPROVED FOR TRAFFIC HANDLING WORK ONLY*

REVISED BY | DATE REVISED

SHERI M. RODRIGUEZ | TROY A. ARSENEAU

CALCULATED-DESIGNED BY | CHECKED BY

FUNCTIONAL SUPERVISOR: RICHARD MULLEN

STATE OF CALIFORNIA - DEPARTMENT OF TRANSPORTATION

Caltrans® TRAFFIC OPS

P:\PROJ\01\0B280\draft ing\01_0B280\01120001121md002.dgn

LAST REVISION 12-04-15 | DATE PLOTTED => 14-JAN-2016 | TIME PLOTTED => 14:24

(N) = NOT A PAY ITEM, FOR INFORMATION ONLY

| Dist | COUNTY | ROUTE | POST MILES TOTAL PROJECT | SHEET No. | TOTAL SHEETS |
|---|---|---|---|---|---|
| 01 | DN | 101 | 17.4 | 15 | 74 |

REGISTERED CIVIL ENGINEER 12/04/15 DATE

January 11, 2016
PLANS APPROVAL DATE

REGISTERED PROFESSIONAL ENGINEER T. LARK No. 52481 Exp 12/31/16 CIVIL STATE OF CALIFORNIA

*THE STATE OF CALIFORNIA OR ITS OFFICERS OR AGENTS SHALL NOT BE RESPONSIBLE FOR THE ACCURACY OR COMPLETENESS OF SCANNED COPIES OF THIS PLAN SHEET.*

## TEMPORARY BMP's

| LOCATION FROM | LOCATION TO | L+/R+ | TEMPORARY FIBER ROLL | TEMPORARY SILT FENCE | TEMPORARY MULCH | TEMPORARY DRAINAGE INLET PROTECTION | TEMPORARY CONSTRUCTION ENTRANCE |
|---|---|---|---|---|---|---|---|
| FROM | TO | | LF | LF | SQYD | EA | EA |
| "A1" 258+64 | | L+ | | | | 1 | |
| "A1" 260+00 | "A1" 265+50 | L+ | 1000 | 550 | 1600 | | |
| "A1" 265+00 | | | | | | | 1 |
| | TOTAL | | 1000 | 550 | 1600 | 1 | 1 |

## GUARD RAILING

| LOCATION | L+/R+ | TRANSITION RAILING (TYPE WB-31) | ALTERNATIVE FLARED TERMINAL SYSTEM |
|---|---|---|---|
| | | EA | EA |
| "A1" 265+00 | L+ | 1 | 1 |
| | TOTAL | 1 | 1 |

## TEMPORARY RAILING

| LOCATION FROM | LOCATION TO | TEMPORARY RAILING (TYPE K) | Temp CRASH CUSHION SYSTEM | TYPE III BARRICADE | REMARKS |
|---|---|---|---|---|---|
| FROM | TO | LF | EA | EA | |
| "A1" 259+40 | "A1" 265+60 | 620 | 2 | 4 | |
| FROM SHEET CS-1 | | 200 | 5 | | WOOD POLE PROTECTION |
| | TOTAL | 820 | 7 | 4 | |

## ROADWAY

| LOCATION FROM | LOCATION TO | COLD PLANE AC PAVEMENT | ROADWAY EXCAVATION | (N) EMBANKMENT | CLASS 2 AGGREGATE BASE (CY) | HMA (TYPE A) | HOT MIX ASPHALT OPEN GRADED (OPEN GRADED FRICTION COURSE) | TACK COAT | GEOSYNTHETIC PAVEMENT INTERLAYER (PAVING FABRIC) | ASPHALT BINDER (GEOSYNTHETIC PAVEMENT INTERLAYER) | SHOULDER BACKING | CENTERLINE RUMBLE STRIP | RUMBLE STRIP |
|---|---|---|---|---|---|---|---|---|---|---|---|---|---|
| FROM | TO | SQYD | CY | CY | CY | TON | TON | TON | SQYD | TON | TON | STA | STA |
| "A1" 258+00 | "A1" 260+00 | 84 | | | | | | | | | | | |
| "A1" 260+00 | "A1" 265+50 | 684 | 3600 | 1400 | 440 | 390 | | 0.6 | 460 | 0.48 | | | |
| "A1" 258+00 | "A1" 269+00 | 82 | | | | | 250 | 1.3 | | | 30 | 11 | 22 |
| | TOTAL | 850 | 3600 | 1400 | 440 | 390 | 250 | 1.9 | 460 | 0.48 | 30 | 11 | 22 |

## PAVEMENT DELINEATION

| LOCATION FROM | LOCATION TO | DETAIL No. | (N) DETAIL LENGTH | REMOVE THERMOPLASTIC TRAFFIC STRIPE | REMOVE PAVEMENT MARKER | 4" THERMOPLASTIC TRAFFIC STRIPE YELLOW | 4" THERMOPLASTIC TRAFFIC STRIPE WHITE | PAVEMENT MARKER (RETROREFLECTIVE-RECESSED) TYPE D | OBJECT MARKER TYPE P |
|---|---|---|---|---|---|---|---|---|---|
| FROM | TO | | | LF | EA | LF | | EA | EA |
| "A1" 257+60 | "A1" 269+00 | 22 & 27B | 1140 | | | 2280 | 2280 | 94 | |
| "A1" 260+00, L+ | | | | | | | | | 1 |
| "A1" 266+75 | "A1" 269+00 | 22 | 225 | 450 | 18 | | | | |
| FROM Temp PAVEMENT DELINEATION | | | | 1830 | 76 | | | | |
| | | | SUB TOTAL | 2280 | 94 | 2280 | 2280 | | |
| | | | TOTAL | 2280 | 94 | 4560 | | 94 | 1 |

## DESTROY WELL

| LOCATION | (N) DEPTH | DESTROY WELL |
|---|---|---|
| | LF | EA |
| "A1" 260+92 L+ | 60 | 1 |
| "A1" 261+40 L+ | 60 | 1 |
| "A1" 261+90 R+ | 60 | 1 |
| "A1" 261+90 L+ | 100 | 1 |
| "A1" 262+40 L+ | 60 | 1 |
| "A1" 263+20 L+ | 50 | 1 |
| "A1" 263+25 L+ | 40 | 1 |
| "A1" 263+36 L+ | 40 | 1 |
| "A1" 263+50 L+ | 55 | 1 |
| TOTAL | | 9 |

NOTE: WELLS ARE 2.75" DIAMETER PVC PIPE.

## TEMPORARY PAVEMENT DELINEATION

| LOCATION FROM | LOCATION TO | DETAIL No. | (N) DETAIL LENGTH | REMOVE THERMOPLASTIC TRAFFIC STRIPE | TEMPORARY TRAFFIC STRIPE (PAINT) | CHANNELIZER (SURFACE MOUNTED) | REMOVE PAVEMENT MARKER | TEMPORARY PAVEMENT MARKING (PAINT) | REMOVE PAINTED PAVEMENT MARKING | REMARKS |
|---|---|---|---|---|---|---|---|---|---|---|
| FROM | TO | | | LF | LF | EA | EA | SQFT | SQFT | |
| "A1" 230+00 | "A1" 257+50 | | 2750 | | | 55 | | | | 16' R+ Temp PASSING LANE CLOSURE |
| "A1" 257+60 | "A1" 266+75 | 22 | 915 | 1830 | | | 76 | | | |
| "A1" 258+30 R+ | | | | | | | | 12 | 12 | LIMIT LINE |
| "A1" 258+20 | "A1" 266+30 | 27B | 810 | | 810 | | | | | |
| "A1" 266+75 L+ | | | | | | | | 12 | 12 | LIMIT LINE |
| "A1" 266+75 | "A1" 267+65 | | | | | 10 | | | | 10' C-C |
| "A1" 271+30 | "A1" 289+80 | | 1850 | | | 37 | | | | 16' L+ Temp PASSING LANE CLOSURE |
| | | | TOTAL | 1830 | 810 | 102 | 76 | 24 | 24 | |

# SUMMARY OF QUANTITIES
# Q-1

REVISED BY | DATE REVISED
TODD LARK | BIJAN SAMRAD
CALCULATED-DESIGNED BY | CHECKED BY
FUNCTIONAL SUPERVISOR
L.R. ASHLEY
STATE OF CALIFORNIA - DEPARTMENT OF TRANSPORTATION
Caltrans DESIGN
P:\PROJ\01\0B280\drafting\01_0B280\01120001121pa001.dgn

LAST REVISION 12-04-15 | DATE PLOTTED => 14-JAN-2016 | TIME PLOTTED => 14:24

| Dist | COUNTY | ROUTE | POST MILES TOTAL PROJECT | SHEET No. | TOTAL SHEETS |
|---|---|---|---|---|---|
| 01 | DN | 101 | 17.4 | 16 | 74 |

Laura Lazzarotto
LICENSED LANDSCAPE ARCHITECT

January 11, 2016
PLANS APPROVAL DATE

LICENSED LANDSCAPE ARCHITECT
Laura Lazzarotto
Signature
8-31-17
Renewal Date
12/04/15
Date
STATE OF CALIFORNIA

*THE STATE OF CALIFORNIA OR ITS OFFICERS OR AGENTS SHALL NOT BE RESPONSIBLE FOR THE ACCURACY OR COMPLETENESS OF SCANNED COPIES OF THIS PLAN SHEET.*

NOTES:

1. FOR ACCURATE RIGHT OF WAY DATA, CONTACT RIGHT OF WAY ENGINEERING AT THE DISTRICT OFFICE.

LEGEND:

EC TYPE 1

## EROSION CONTROL TYPE 1

| ITEM | MATERIAL | | APPLICATION RATE | NOTES |
|---|---|---|---|---|
| | DESCRIPTION | TYPE | | |
| WOOD MULCH | SHREDDED REDWOOD BARK | ——— | 484 CY/ACRE | 4" DEPTH |

## EROSION CONTROL QUANTITIES

| WOOD MULCH | |
|---|---|
| | CY |
| TOTAL | 120 |

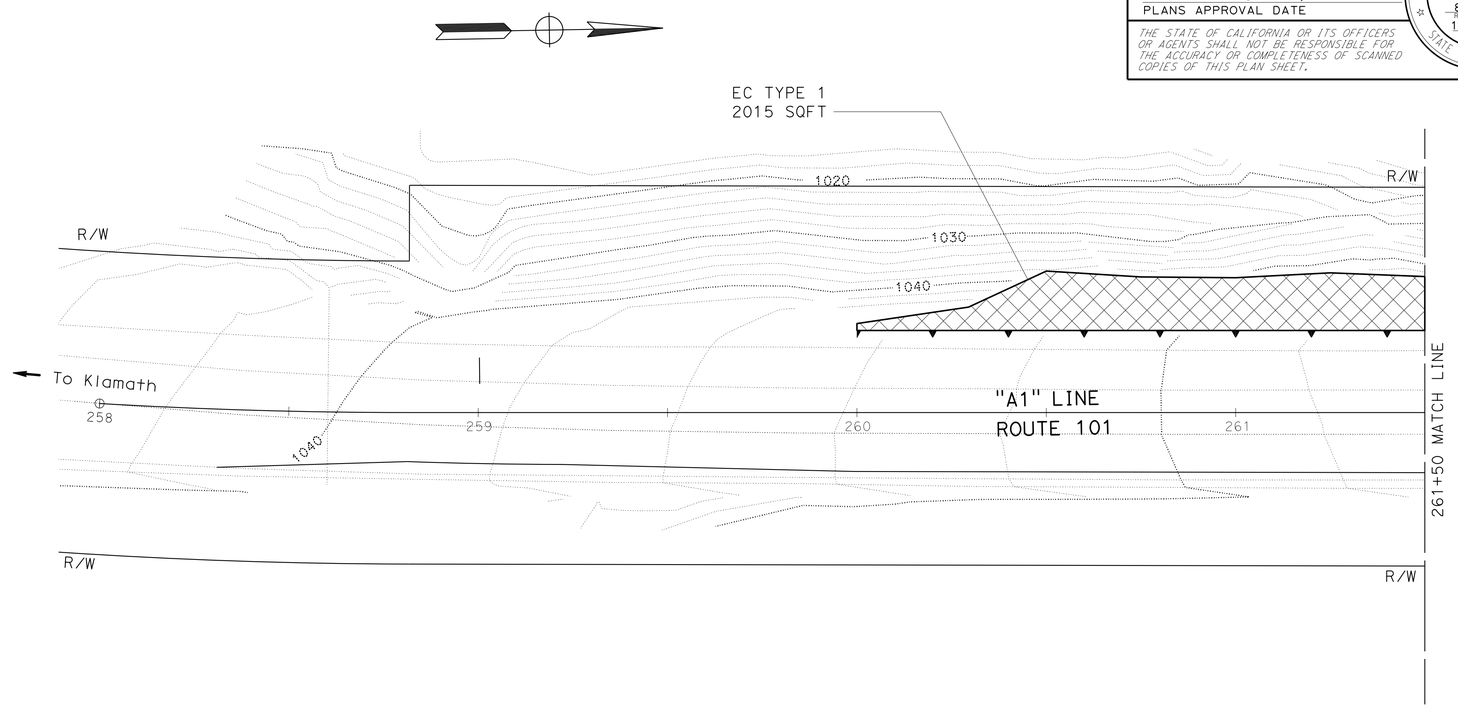


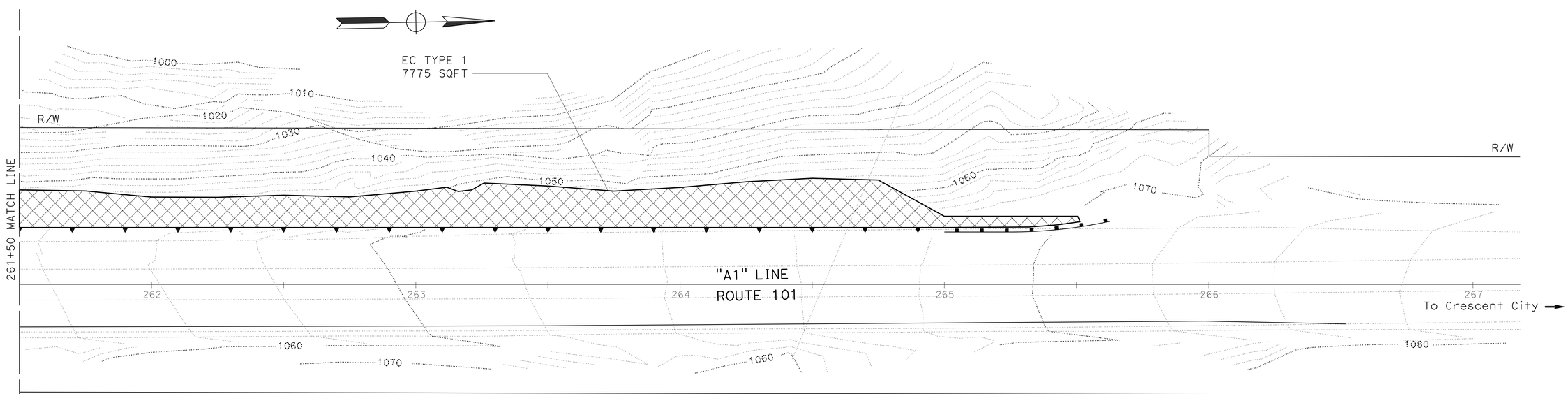


# EROSION CONTROL PLAN AND QUANTITIES

SCALE: 1"=20'

**EC-1**

*APPROVED FOR EROSION CONTROL WORK ONLY*

STATE OF CALIFORNIA - DEPARTMENT OF TRANSPORTATION
Caltrans
LANDSCAPE

FUNCTIONAL SUPERVISOR: TIM BOESE
CALCULATED-DESIGNED BY: LAURA LAZZAROTTO
CHECKED BY: PATRICK SULLIVAN
REVISED BY
DATE REVISED

LAST REVISION 12-04-15
DATE PLOTTED => 14-JAN-2016
TIME PLOTTED => 14:24

| Dist | COUNTY | ROUTE | POST MILES TOTAL PROJECT | SHEET No. | TOTAL SHEETS |
|---|---|---|---|---|---|
| 01 | DN | 101 | 17.4 | 17 | 74 |

Brian T. Finck 12/04/15
REGISTERED ELECTRICAL ENGINEER DATE

January 11, 2016
PLANS APPROVAL DATE

REGISTERED PROFESSIONAL ENGINEER
BRIAN T. FINCK
No. 17756
Exp. 6-30-16
ELECTRICAL
STATE OF CALIFORNIA

*THE STATE OF CALIFORNIA OR ITS OFFICERS OR AGENTS SHALL NOT BE RESPONSIBLE FOR THE ACCURACY OR COMPLETENESS OF SCANNED COPIES OF THIS PLAN SHEET.*

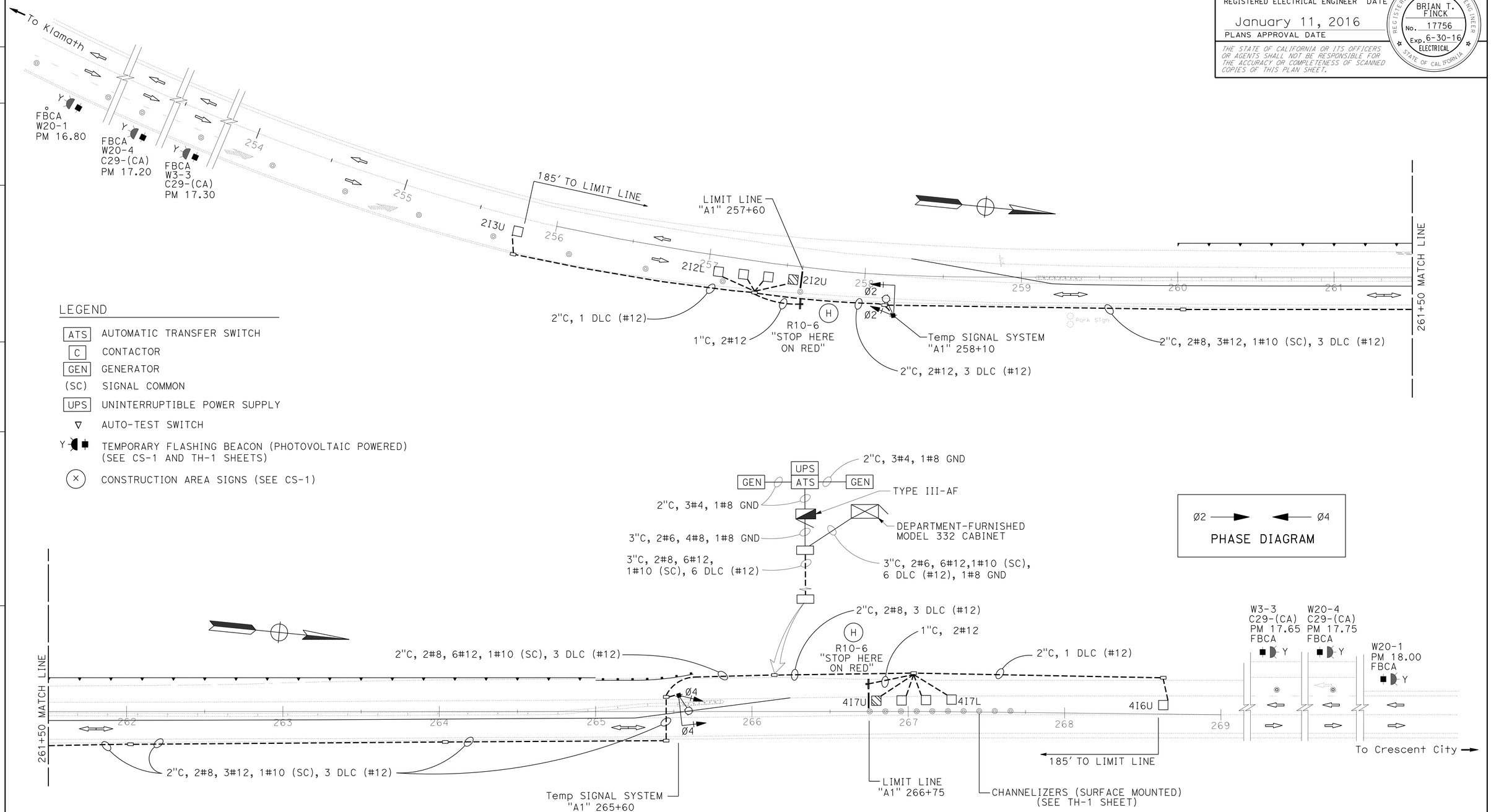


# TEMPORARY SIGNAL SYSTEM

*APPROVED FOR ELECTRICAL WORK ONLY*

SCALE: 1"=30'

E-1

STATE OF CALIFORNIA - DEPARTMENT OF TRANSPORTATION
Caltrans
ELECTRICAL

FUNCTIONAL SUPERVISOR: TROY ARSENEAU
CALCULATED-DESIGNED BY: BRIAN FINCK
CHECKED BY: TODD LARK
REVISED BY
DATE REVISED

P:\PROJ\01\0B280\drafting\01_0B280\01120001121ua001.dgn

LAST REVISION 12-04-15
DATE PLOTTED => 14-JAN-2016
TIME PLOTTED => 14:24

| Dist | COUNTY | ROUTE | POST MILES TOTAL PROJECT | SHEET No. | TOTAL SHEETS |
|---|---|---|---|---|---|
| 01 | DN | 101 | 17.4 | 18 | 74 |

Brian T. Finck 12/04/15
REGISTERED ELECTRICAL ENGINEER DATE

January 11, 2016
PLANS APPROVAL DATE

REGISTERED PROFESSIONAL ENGINEER BRIAN T. FINCK No. 17756 Exp. 6-30-16 ELECTRICAL STATE OF CALIFORNIA

*THE STATE OF CALIFORNIA OR ITS OFFICERS OR AGENTS SHALL NOT BE RESPONSIBLE FOR THE ACCURACY OR COMPLETENESS OF SCANNED COPIES OF THIS PLAN SHEET.*

NOTE: (THIS SHEET)

1 WOOD POLES SHALL BE LOCATED OUTSIDE THE CLEAR RECOVERY ZONE OR PROTECTED IN PLACE.

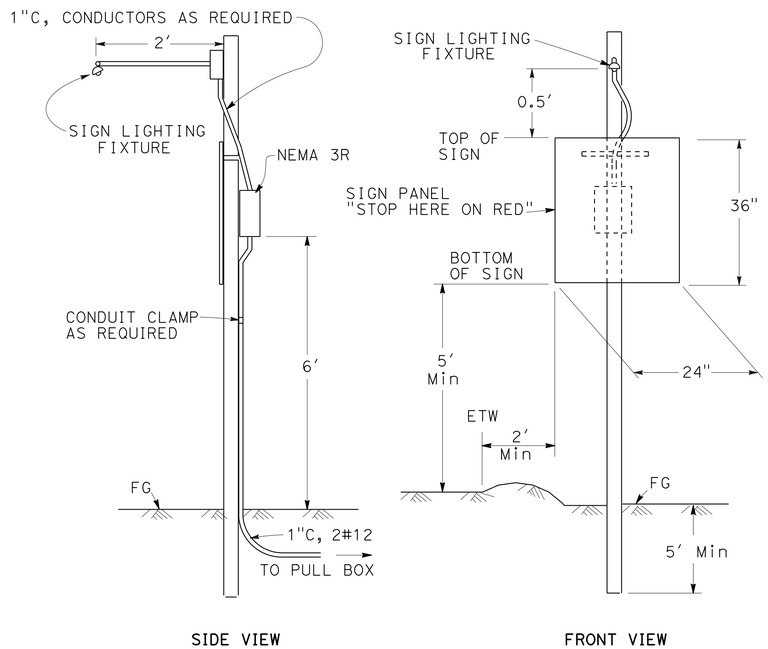


SIDE VIEW FRONT VIEW

**TYPICAL SIGN ILLUMINATION**

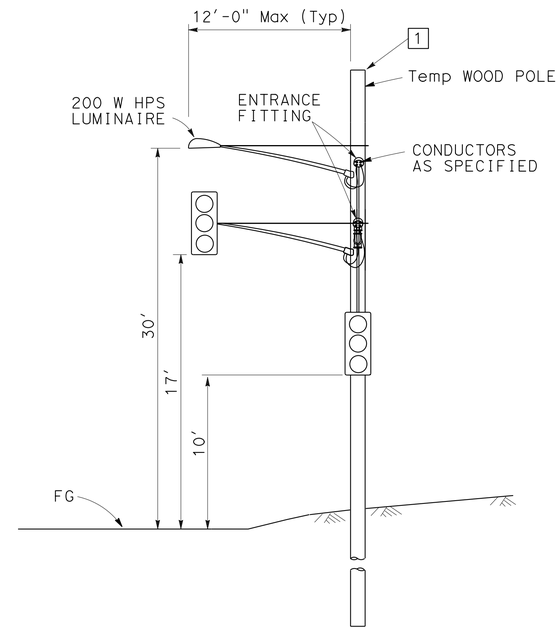


**TEMPORARY TRAFFIC SIGNAL**

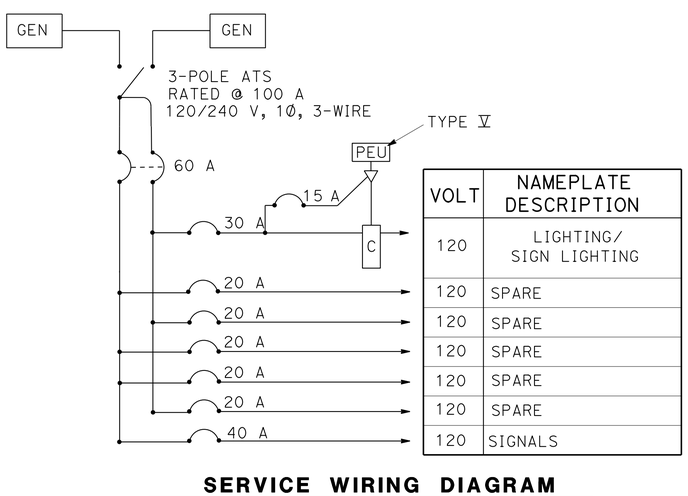


| VOLT | NAMEPLATE DESCRIPTION |
|---|---|
| 120 | LIGHTING/ SIGN LIGHTING |
| 120 | SPARE |
| 120 | SPARE |
| 120 | SPARE |
| 120 | SPARE |
| 120 | SPARE |
| 120 | SIGNALS |

**SERVICE WIRING DIAGRAM**

TYPE III-AF SERVICE EQUIPMENT ENCLOSURE

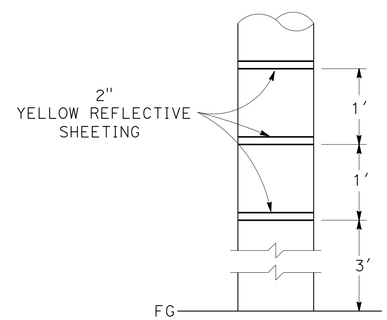


**REFLECTIVE MARKING FOR WOOD POLE**

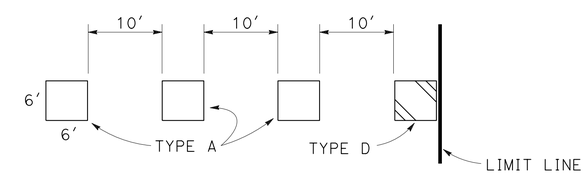


**TYPICAL LOOP DETAIL**

*APPROVED FOR ELECTRICAL WORK ONLY*

NO SCALE

# ELECTRICAL DETAILS
# E-2

REVISED BY | DATE REVISED
BRIAN FINCK | TODD LARK
CALCULATED-DESIGNED BY | CHECKED BY
FUNCTIONAL SUPERVISOR | TROY ARSENEAU
STATE OF CALIFORNIA - DEPARTMENT OF TRANSPORTATION
ELECTRICAL
Caltrans

P:\PROJ\01\0B280\drafting\01_0B280\01120001121ua002.dgn

LAST REVISION 12-04-15 | DATE PLOTTED => 14-JAN-2016 | TIME PLOTTED => 14:24

| Dist | COUNTY | ROUTE | POST MILES TOTAL PROJECT | SHEET No. | TOTAL SHEETS |
|---|---|---|---|---|---|
| 01 | DN | 101 | 17.4 | 19 | 74 |

Brian T. Finck 12/04/15
REGISTERED ELECTRICAL ENGINEER DATE

January 11, 2016
PLANS APPROVAL DATE

REGISTERED PROFESSIONAL ENGINEER BRIAN T. FINCK No. 17756 Exp. 6-30-16 ELECTRICAL STATE OF CALIFORNIA

*THE STATE OF CALIFORNIA OR ITS OFFICERS OR AGENTS SHALL NOT BE RESPONSIBLE FOR THE ACCURACY OR COMPLETENESS OF SCANNED COPIES OF THIS PLAN SHEET.*

**LEGEND:**

A-h = AMPERE HOUR

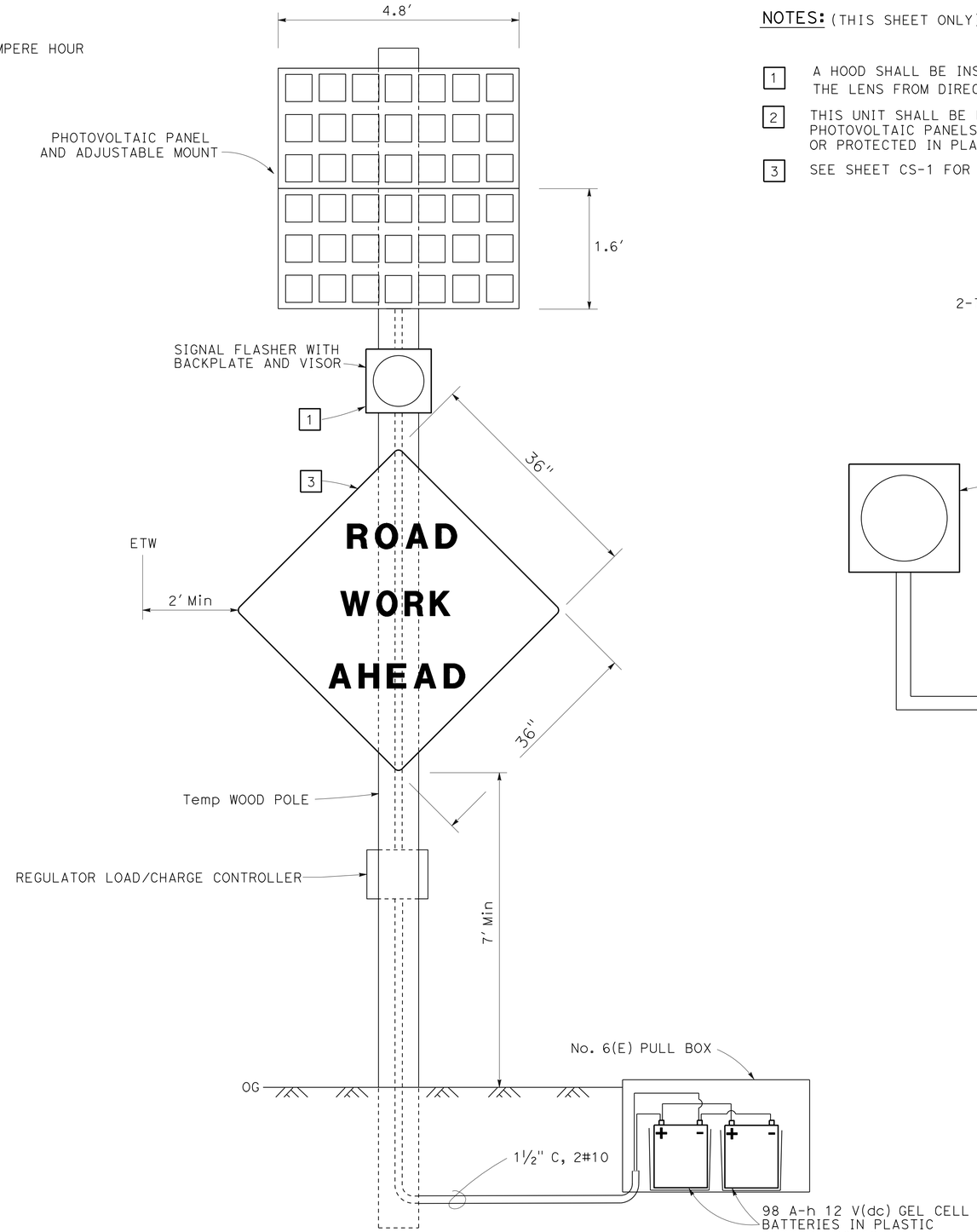


**TEMPORARY FLASHING BEACON (PHOTOVOLTAIC POWERED)**

**NOTES:** (THIS SHEET ONLY)

1. A HOOD SHALL BE INSTALLED ON EACH FLASHER HEAD TO SHIELD THE LENS FROM DIRECT EXPOSURE OF SOLAR RADIATION.
2. THIS UNIT SHALL BE LOCATED IN AN UNSHADED AREA. WOOD POLE WITH PHOTOVOLTAIC PANELS SHALL BE LOCATED OUTSIDE THE CLEAR RECOVERY ZONE OR PROTECTED IN PLACE.
3. SEE SHEET CS-1 FOR SIGNS (B) (F) & (G)

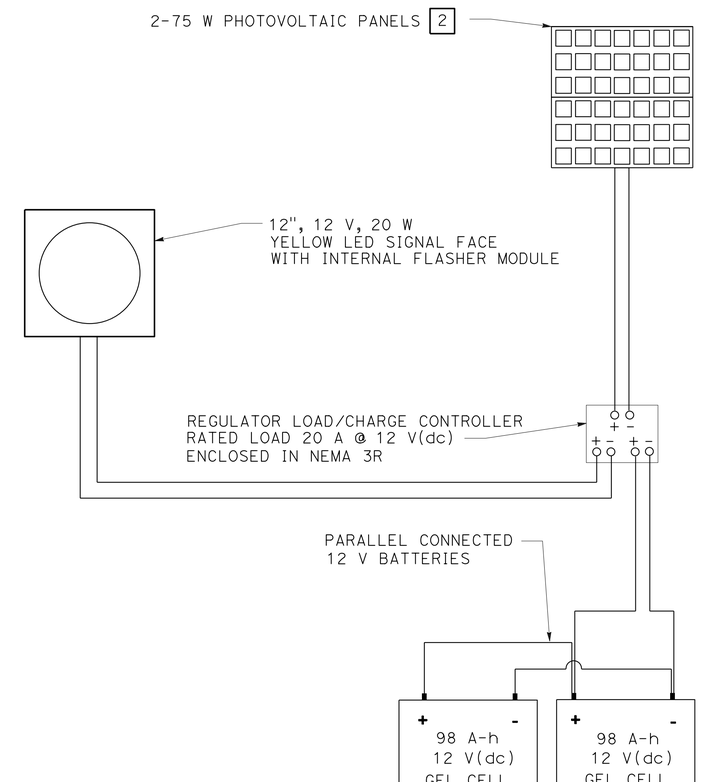


**CONNECTION DIAGRAM**

*APPROVED FOR ELECTRICAL WORK ONLY*

NO SCALE

# ELECTRICAL DETAILS
# E-3

REVISED BY | DATE REVISED
BRIAN FINCK | TODD LARK
CALCULATED-DESIGNED BY | CHECKED BY
FUNCTIONAL SUPERVISOR | TROY ARSENEAU
STATE OF CALIFORNIA - DEPARTMENT OF TRANSPORTATION
Caltrans® ELECTRICAL

P:\PROJ\01\0B280\drafting\01_0B280\01120001121ua003.dgn

LAST REVISION 12-04-15 | DATE PLOTTED => 14-JAN-2016 | TIME PLOTTED => 14:24

| Dist | COUNTY | ROUTE | POST MILES TOTAL PROJECT | SHEET No. | TOTAL SHEETS |
|---|---|---|---|---|---|
| 01 | DN | 101 | 17.4 | 20 | 74 |

Brian T. Finck 12/04/15
REGISTERED ELECTRICAL ENGINEER DATE

January 11, 2016
PLANS APPROVAL DATE

REGISTERED PROFESSIONAL ENGINEER
BRIAN T. FINCK
No. 17756
Exp. 6-30-16
ELECTRICAL
STATE OF CALIFORNIA

*THE STATE OF CALIFORNIA OR ITS OFFICERS OR AGENTS SHALL NOT BE RESPONSIBLE FOR THE ACCURACY OR COMPLETENESS OF SCANNED COPIES OF THIS PLAN SHEET.*

NOTES:

THE QUANTITIES ON THIS SHEET ARE NOT SEPARATE PAY ITEMS AND ARE FOR INFORMATION ONLY.

## TEMPORARY SIGNAL SYSTEM

| SHEET NUMBER | WOOD POLE | 2" CONDUIT TYPE 3 | GENERATOR | #5 PULL BOX | #6 (E) PULL BOX | 3 SECTION SIGNAL HEAD | FBCA | SIGN LIGHTING FIXTURE | 200 W HPS LUMINAIRE | TYPE D LOOP | TYPE A LOOP | DLC | #4 CONDUCTORS | #6 CONDUCTORS | #8 CONDUCTORS | #8 CONDUCTORS (G) | #10 CONDUCTORS | #12 CONDUCTORS | NEMA 3R SERVICE ENCLOSEURE | MODEL 332L CABINET FOUNDATION PLATFORM | UPS |
|---|---|---|---|---|---|---|---|---|---|---|---|---|---|---|---|---|---|---|---|---|---|
| | EA | LF | EA | EA | EA | EA | EA | EA | EA | EA | EA | LF | LF | LF | LF | LF | LF | LF | EA | EA | EA |
| E-1 | 8 | 1400 | 2 | 12 | 6 | 4 | 6 | 2 | 2 | 2 | 8 | 3800 | 100 | 50 | 2200 | 1100 | 1100 | 3600 | 1 | 1 | 1 |

*APPROVED FOR ELECTRICAL WORK ONLY*

# ELECTRICAL QUANTITIES
# E-4

REVISED BY | DATE REVISED
BRIAN FINCK | TODD LARK
CALCULATED-DESIGNED BY | CHECKED BY
FUNCTIONAL SUPERVISOR
TROY ARSENEAU

STATE OF CALIFORNIA - DEPARTMENT OF TRANSPORTATION
Caltrans
ELECTRICAL

P:\PROJ\01\0B280\draffing\01_0B280\01120001121ua004.dgn

LAST REVISION 12-04-15 | DATE PLOTTED => 14-JAN-2016 | TIME PLOTTED => 14:25

## M

| | |
|---|---|
| Maint | MAINTENANCE |
| Max | MAXIMUM |
| MB | METAL BEAM |
| MBB | METAL BEAM BARRIER |
| MBGR | METAL BEAM GUARD RAILING |
| Med | MEDIAN |
| MGS | MIDWEST GUARDRAIL SYSTEM |
| MH | MANHOLE |
| Min | MINIMUM |
| Misc | MISCELLANEOUS |
| Misc I & S | MISCELLANEOUS IRON AND STEEL |
| Mkr | MARKER |
| Mod | MODIFIED, |
| | MODIFY |
| Mon | MONUMENT |
| MP | METAL PLATE |
| MPGR | METAL PLATE GUARD RAILING |
| MR | MOVEMENT RATING |
| MSE | MECHANICALLY STABILIZED EMBANKMENT |
| Mt | MOUNTAIN, MOUNT |
| Mtl | MATERIAL |
| MVP | MAINTENANCE VEHICLE PULLOUT |

## N

| | |
|---|---|
| N | NORTH |
| NB | NORTHBOUND |
| No. | NUMBER (MUST HAVE PERIOD) |
| Nos. | NUMBERS (MUST HAVE PERIOD) |
| NPS | NOMINAL PIPE SIZE |
| NS | NEAR SIDE |
| NSP | NEW STANDARD PLAN |
| NTS | NOT TO SCALE |

## O

| | |
|---|---|
| Oblr | OBLITERATE |
| OC | OVERCROSSING |
| OD | OUTSIDE DIAMETER |
| OF | OUTSIDE FACE |
| OG | ORIGINAL GROUND |
| OGAC | OPEN GRADED ASPHALT CONCRETE |
| OGFC | OPEN GRADED FRICTION COURSE |
| OH | OVERHEAD |
| OHWM | ORDINARY HIGH WATER MARK |
| O-O | OUT TO OUT |
| Opp | OPPOSITE |
| OSD | OVERSIDE DRAIN |

## P

| | |
|---|---|
| p | PAGE |
| PAP | PERFORATED ALUMINUM PIPE |
| PB | PULL BOX |
| PC | POINT OF CURVATURE, |
| | PRECAST |
| PCC | POINT OF COMPOUND CURVE, |
| | PORTLAND CEMENT CONCRETE |
| PCMS | PORTABLE CHANGEABLE MESSAGE SIGN |
| PCP | PERFORATED CONCRETE PIPE, |
| | PRESTRESSED CONCRETE PIPE |
| PCVC | POINT OF COMPOUND VERTICAL CURVE |
| PEC | PERMIT TO ENTER AND CONSTRUCT |
| Ped | PEDESTRIAN |
| Ped OC | PEDESTRIAN OVERCROSSING |
| Ped UC | PEDESTRIAN UNDERCROSSING |
| Perm Mtl | PERMEABLE MATERIAL |

## P continued

| | |
|---|---|
| PG | PROFILE GRADE |
| PI | POINT OF INTERSECTION |
| PJP | PARTIAL JOINT PENETRATION |
| Pkwy | PARKWAY |
| ℙ,PL | PLATE |
| P/L | PROPERTY LINE |
| PM | POST MILE, |
| | TIME FROM NOON TO MIDNIGHT |
| PN | PAVING NOTCH |
| POC | POINT OF HORIZONTAL CURVE |
| POT | POINT OF TANGENT |
| POVC | POINT OF VERTICAL CURVE |
| PP | PIPE PILE, |
| | PLASTIC PIPE, |
| | POWER POLE |
| PPL | PREFORMED PERMEABLE LINER |
| PPP | PERFORATED PLASTIC PIPE |
| PRC | POINT OF REVERSE CURVE |
| PRF | PAVEMENT REINFORCING FABRIC |
| PRVC | POINT OF REVERSE VERTICAL CURVE |
| PS&E | PLANS, SPECIFICATIONS AND ESTIMATES |
| PS, P/S | PRESTRESSED |
| PSP | PERFORATED STEEL PIPE |
| PT | POINT OF TANGENCY |
| PVC | POLYVINYL CHLORIDE |
| Pvmt | PAVEMENT |

## Q

| | |
|---|---|
| Qty | QUANTITY |

## R

| | |
|---|---|
| R | RADIUS |
| R & D | REMOVE AND DISPOSE |
| R & S | REMOVE AND SALVAGE |
| R/C | RATE OF CHANGE |
| RCA | REINFORCED CONCRETE ARCH |
| RCB | REINFORCED CONCRETE BOX |
| RCP | REINFORCED CONCRETE PIPE |
| RCPA | REINFORCED CONCRETE PIPE ARCH |
| Rd | ROAD |
| Reinf | REINFORCED, |
| | REINFORCEMENT, |
| | REINFORCING |
| Rel | RELOCATE |
| Repl | REPLACEMENT |
| Ret | RETAINING |
| Rev | REVISED, REVISION |
| Rdwy | ROADWAY |
| RHMA | RUBBERIZED HOT MIX ASPHALT |
| Riv | RIVER |
| RM | ROAD-MIXED |
| RP | RADIUS POINT, |
| | REFERENCE POINT |
| RR | RAILROAD |
| RSP | ROCK SLOPE PROTECTION, |
| | REVISED STANDARD PLAN |
| Rt | RIGHT |
| Rte | ROUTE |
| RW | REDWOOD, |
| | RETAINING WALL |
| R/W | RIGHT OF WAY |
| Rwy | RAILWAY |

## S

| | |
|---|---|
| S | SOUTH, |
| | SUPPLEMENT |
| SAE | STRUCTURE APPROACH EMBANKMENT |
| Salv | SALVAGE |
| SAPP | STRUCTURAL ALUMINUM PLATE PIPE |
| SB | SOUTHBOUND |
| SC | SAND CUSHION |
| SCSP | SLOTTED CORRUGATED STEEL PIPE |
| SD | STORM DRAIN |
| Sec | SECOND, |
| | SECTION |
| Sep | SEPARATION |
| SG | SUBGRADE |
| Shld | SHOULDER |
| Sht | SHEET |
| Sim | SIMILAR |
| ₤ | STATION LINE |
| SM | SELECTED MATERIAL |
| Spec | SPECIAL, |
| | SPECIFICATIONS |
| SPP | SLOTTED PLASTIC PIPE |
| SS | SLOPE STAKE |
| SSBM | STRAP AND SADDLE BRACKET METHOD |
| SSD | STRUCTURAL SECTION DRAIN |
| SSPA | STRUCTURAL STEEL PLATE ARCH |
| SSPP | STRUCTURAL STEEL PLATE PIPE |
| SSPPA | STRUCTURAL STEEL PLATE PIPE ARCH |
| SSRP | STEEL SPIRAL RIB PIPE |
| St | STREET |
| Sta | STATION |
| STBB | SINGLE THRIE BEAM BARRIER |
| Std | STANDARD |
| Str | STRUCTURE |
| Surf | SURFACING |
| SW | SIDEWALK, |
| | SOUND WALL |
| Swr | SEWER |
| Sym | SYMMETRICAL |
| S4S | SURFACE 4 SIDES |

## T

| | |
|---|---|
| T | SEMI-TANGENT |
| Tan | TANGENT |
| TBB | THRIE BEAM BARRIER |
| Tbr | TIMBER |
| TC | TOP OF CURB |
| TCB | TRAFFIC CONTROL BOX |
| TCE | TEMPORARY CONSTRUCTION EASEMENT |
| Tel | TELEPHONE |
| Temp | TEMPORARY |
| TG | TOP OF GRADE |
| Tot | TOTAL |
| TP | TELEPHONE POLE |
| TPB | TREATED PERMEABLE BASE |
| TPM | TREATED PERMEABLE MATERIAL |
| Trans | TRANSITION |

## T continued

| | |
|---|---|
| TS | TRANSVERSE, |
| | TRAFFIC SIGNAL, |
| | TUBULAR STEEL |
| Typ | TYPICAL |

## U

| | |
|---|---|
| UC | UNDERCROSSING |
| UD | UNDERDRAIN |
| UG | UNDERGROUND |
| UON | UNLESS OTHERWISE NOTED |
| UP | UNDERPASS |

## V

| | |
|---|---|
| V | VALVE, |
| | DESIGN SPEED |
| Var | VARIABLE, |
| | VARIES |
| VC | VERTICAL CURVE |
| VCP | VITRIFIED CLAY PIPE |
| Vert | VERTICAL |
| Via | VIADUCT |
| Vol | VOLUME |

## W

| | |
|---|---|
| W | WEST, |
| | WIDTH |
| WB | WESTBOUND |
| WH | WEEP HOLE |
| WM | WIRE MESH |
| WS | WATER SURFACE |
| WSP | WELDED STEEL PIPE |
| Wt | WEIGHT |
| WV | WATER VALVE |
| WW | WINGWALL |
| WWLOL | WINGWALL LAYOUT LINE |

## X

| | |
|---|---|
| X Sec | CROSS SECTION |
| Xing | CROSSING |

## Y

| | |
|---|---|
| Yr | YEAR |
| Yrs | YEARS |

| Dist | COUNTY | ROUTE | POST MILES TOTAL PROJECT | SHEET No. | TOTAL SHEETS |
|---|---|---|---|---|---|
| 01 | DN | 102 | 17.4 | 21 | 74 |

Grace M. Tsushima
REGISTERED CIVIL ENGINEER

July 19, 2013
PLANS APPROVAL DATE

REGISTERED PROFESSIONAL ENGINEER
Grace M. Tsushima
No. C49814
Exp. 9-30-14
CIVIL
STATE OF CALIFORNIA

*THE STATE OF CALIFORNIA OR ITS OFFICERS OR AGENTS SHALL NOT BE RESPONSIBLE FOR THE ACCURACY OR COMPLETENESS OF SCANNED COPIES OF THIS PLAN SHEET.*

TO ACCOMPANY PLANS DATED 01-11-16

### UNIT OF MEASUREMENT SYMBOLS:

Some of the symbols used in the project plan quantity tables and in the Bid Item List are:

TABLE A

| SYMBOL USED | DEFINITIONS |
|---|---|
| ACRE | ACRE |
| CF | CUBIC FOOT |
| CY | CUBIC YARD |
| EA | EACH |
| GAL | GALLON |
| LB | POUND |
| LF | LINEAR FOOT |
| SQFT | SQUARE FOOT |
| SQYD | SQUARE YARD |
| STA | 100 FEET |
| TAB | TABLET |
| TON | 2,000 POUNDS |

Some of the symbols used in the plans other than in the project plan quantity tables are:

TABLE B

| SYMBOL USED | DEFINITIONS |
|---|---|
| ksi | KIPS PER SQUARE INCH |
| ksf | KIPS PER SQUARE FOOT |
| psi | POUNDS PER SQUARE INCH |
| psf | POUNDS PER SQUARE FOOT |
| $lb/ft^3$, pcf | POUNDS PER CUBIC FOOT |
| tsf | TONS PER SQUARE FOOT |
| mph, MPH * | MILES PER HOUR |
| ø | NOMINAL DIAMETER |
| oz | OUNCE |
| lb | POUND |
| kip | 1,000 POUNDS |
| cal | CALORIE |
| ft | FOOT OR FEET |
| gal | GALLON |

* For use on a sign panel only

STATE OF CALIFORNIA
DEPARTMENT OF TRANSPORTATION

# ABBREVIATIONS (SHEET 2 OF 2)

NO SCALE

RSP A10B DATED JULY 19, 2013 SUPERSEDES STANDARD PLAN A10B
DATED MAY 20, 2011 - PAGE 2 OF THE STANDARD PLANS BOOK DATED 2010.

**REVISED STANDARD PLAN RSP A10B**

**2010 REVISED STANDARD PLAN RSP A10B**

DATE PLOTTED => 14-JAN-2016
TIME PLOTTED => 14:25

REFERENCE: CALTRANS SOIL & ROCK LOGGING, CLASSIFICATION, AND PRESENTATION MANUAL (2010)

| Dist | COUNTY | ROUTE | POST MILES TOTAL PROJECT | SHEET No. | TOTAL SHEETS |
|---|---|---|---|---|---|
| 01 | DN | 102 | 17.4 | 22 | 74 |

CERTIFIED ENGINEERING GEOLOGIST

October 30, 2015
PLANS APPROVAL DATE

REGISTERED GEOLOGIST
CHRIS A. RISDEN
CERTIFIED ENGINEERING GEOLOGIST
No. 2541
Exp. 9-30-17
STATE OF CALIFORNIA

*THE STATE OF CALIFORNIA OR ITS OFFICERS OR AGENTS SHALL NOT BE RESPONSIBLE FOR THE ACCURACY OR COMPLETENESS OF SCANNED COPIES OF THIS PLAN SHEET.*

TO ACCOMPANY PLANS DATED 01-11-16

**ABBREVIATION:**

GWS = Ground Water Surface

## CEMENTATION

| DESCRIPTION | CRITERIA |
|---|---|
| WEAK | CRUMBLES OR BREAKS WITH HANDLING OR LITTLE FINGER PRESSURE. |
| MODERATE | CRUMBLES OR BREAKS WITH CONSIDERABLE FINGER PRESSURE. |
| STRONG | WILL NOT CRUMBLE OR BREAK WITH FINGER PRESSURE. |

## BOREHOLE IDENTIFICATION

| SYMBOL | HOLE TYPE | DESCRIPTION |
|---|---|---|
| Size | A | AUGER BORING (HOLLOW OR SOLID STEM BUCKET) |
| Size | R | ROTARY DRILLED BORING (CONVENTIONAL) |
| | RW | ROTARY DRILLED WITH SELF-CASING WIRE-LINE |
| | RC | ROTARY CORE WITH CONTINUOUSLY-SAMPLED, SELF-CASING WIRE-LINE |
| | P | ROTARY PERCUSSION BORING (AIR) |
| Size | R | ROTARY DRILLED DIAMOND CORE |
| | RC | ROTARY DRILLED DIAMOND CORE, CONTINUOUSLY SAMPLED |
| Size | HD | HAND DRIVEN (1-INCH SOIL TUBE) |
| | HA | HAND AUGER |
| ● | D | DYNAMIC CONE PENETRATION BORING |
| ▲ | CPT | CONE PENETRATION TEST (ASTM D 5778) |
| [ ] | O | OTHER (NOTE ON LOTB) |

Note: Size in inches.

## CONSISTENCY OF COHESIVE SOILS

| DESCRIPTION | SHEAR STRENGTH (tsf) | POCKET PENETROMETER MEASUREMENT, PP, (tsf) | TORVANE MEASUREMENT, TV, (tsf) | VANE SHEAR MEASUREMENT, VS, (tsf) |
|---|---|---|---|---|
| VERY SOFT | LESS THAN 0.12 | LESS THAN 0.25 | LESS THAN 0.12 | LESS THAN 0.12 |
| SOFT | 0.12 - 0.25 | 0.25 - 0.5 | 0.12 - 0.25 | 0.12 - 0.25 |
| MEDIUM STIFF | 0.25 - 0.5 | 0.5 - 1 | 0.25 - 0.5 | 0.25 - 0.5 |
| STIFF | 0.5 - 1 | 1 - 2 | 0.5 - 1 | 0.5 - 1 |
| VERY STIFF | 1 - 2 | 2 - 4 | 1 - 2 | 1 - 2 |
| HARD | GREATER THAN 2 | GREATER THAN 4 | GREATER THAN 2 | GREATER THAN 2 |

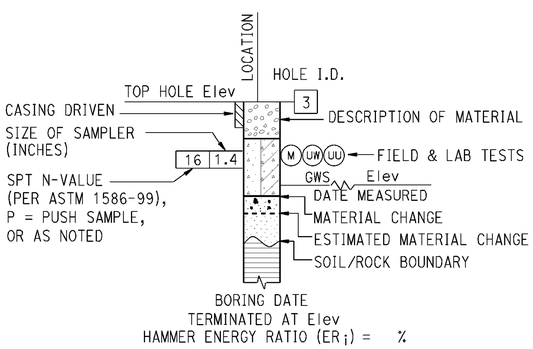


**ROTARY BORING**

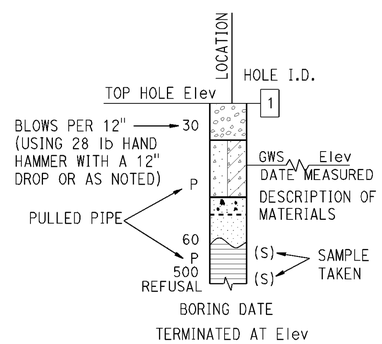


**HAND BORING**

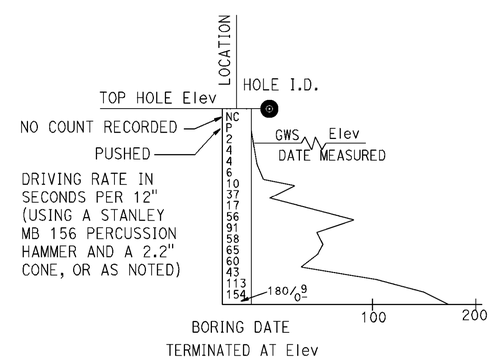


**DYNAMIC CONE PENETRATION BORING**

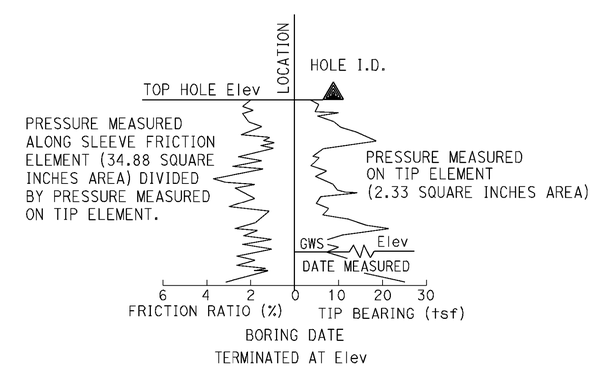


**CONE PENETRATION TEST (CPT) BORING**

STATE OF CALIFORNIA
DEPARTMENT OF TRANSPORTATION

# LEGEND - SOIL (SHEET 1 OF 2)

NO SCALE

RSP A10F DATED OCTOBER 30, 2015 SUPERSEDES STANDARD PLAN A10F DATED MAY 20, 2011 - PAGE 6 OF THE STANDARD PLANS BOOK DATED 2010.

**REVISED STANDARD PLAN RSP A10F**

**2010 REVISED STANDARD PLAN RSP A10F**

DATE PLOTTED => 14-JAN-2016
TIME PLOTTED => 14:25

REFERENCE: CALTRANS SOIL & ROCK LOGGING, CLASSIFICATION, AND PRESENTATION MANUAL (2010)

| Dist | COUNTY | ROUTE | POST MILES TOTAL PROJECT | SHEET No. | TOTAL SHEETS |
|---|---|---|---|---|---|
| 01 | DN | 102 | 17.4 | 23 | 74 |

CERTIFIED ENGINEERING GEOLOGIST

October 30, 2015
PLANS APPROVAL DATE

REGISTERED GEOLOGIST
CHRIS A. RISDEN
CERTIFIED ENGINEERING GEOLOGIST
No. 2541
Exp. 9-30-17
STATE OF CALIFORNIA

*THE STATE OF CALIFORNIA OR ITS OFFICERS OR AGENTS SHALL NOT BE RESPONSIBLE FOR THE ACCURACY OR COMPLETENESS OF SCANNED COPIES OF THIS PLAN SHEET.*

TO ACCOMPANY PLANS DATED 01-11-16

## GROUP SYMBOLS AND NAMES

| GRAPHIC/SYMBOL | GROUP NAMES | GRAPHIC/SYMBOL | GROUP NAMES |
|---|---|---|---|
| GW | WELL-GRADED GRAVEL<br>WELL-GRADED GRAVEL WITH SAND | CL | LEAN CLAY<br>LEAN CLAY WITH SAND<br>LEAN CLAY WITH GRAVEL<br>SANDY LEAN CLAY<br>SANDY LEAN CLAY WITH GRAVEL<br>GRAVELLY LEAN CLAY<br>GRAVELLY LEAN CLAY WITH SAND |
| GP | POORLY-GRADED GRAVEL<br>POORLY-GRADED GRAVEL WITH SAND | | |
| GW-GM | WELL-GRADED GRAVEL WITH SILT<br>WELL-GRADED GRAVEL WITH SILT AND SAND | CL-ML | SILTY CLAY<br>SILTY CLAY WITH SAND<br>SILTY CLAY WITH GRAVEL<br>SANDY SILTY CLAY<br>SANDY SILTY CLAY WITH GRAVEL<br>GRAVELLY SILTY CLAY<br>GRAVELLY SILTY CLAY WITH SAND |
| GW-GC | WELL-GRADED GRAVEL WITH CLAY (OR SILTY CLAY)<br>WELL-GRADED GRAVEL WITH CLAY AND SAND (OR SILTY CLAY AND SAND) | | |
| GP-GM | POORLY-GRADED GRAVEL WITH SILT<br>POORLY-GRADED GRAVEL WITH SILT AND SAND | ML | SILT<br>SILT WITH SAND<br>SILT WITH GRAVEL<br>SANDY SILT<br>SANDY SILT WITH GRAVEL<br>GRAVELLY SILT<br>GRAVELLY SILT WITH SAND |
| GP-GC | POORLY-GRADED GRAVEL WITH CLAY (OR SILTY CLAY)<br>POORLY-GRADED GRAVEL WITH CLAY AND SAND (OR SILTY CLAY AND SAND) | | |
| GM | SILTY GRAVEL<br>SILTY GRAVEL WITH SAND | OL | ORGANIC LEAN CLAY<br>ORGANIC LEAN CLAY WITH SAND<br>ORGANIC LEAN CLAY WITH GRAVEL<br>SANDY ORGANIC LEAN CLAY<br>SANDY ORGANIC LEAN CLAY WITH GRAVEL<br>GRAVELLY ORGANIC LEAN CLAY<br>GRAVELLY ORGANIC LEAN CLAY WITH SAND |
| GC | CLAYEY GRAVEL<br>CLAYEY GRAVEL WITH SAND | | |
| GC-GM | SILTY, CLAYEY GRAVEL<br>SILTY, CLAYEY GRAVEL WITH SAND | OL | ORGANIC SILT<br>ORGANIC SILT WITH SAND<br>ORGANIC SILT WITH GRAVEL<br>SANDY ORGANIC SILT<br>SANDY ORGANIC SILT WITH GRAVEL<br>GRAVELLY ORGANIC SILT<br>GRAVELLY ORGANIC SILT WITH SAND |
| SW | WELL-GRADED SAND<br>WELL-GRADED SAND WITH GRAVEL | | |
| SP | POORLY-GRADED SAND<br>POORLY-GRADED SAND WITH GRAVEL | CH | FAT CLAY<br>FAT CLAY WITH SAND<br>FAT CLAY WITH GRAVEL<br>SANDY FAT CLAY<br>SANDY FAT CLAY WITH GRAVEL<br>GRAVELLY FAT CLAY<br>GRAVELLY FAT CLAY WITH SAND |
| SW-SM | WELL-GRADED SAND WITH SILT<br>WELL-GRADED SAND WITH SILT AND GRAVEL | | |
| SW-SC | WELL-GRADED SAND WITH CLAY (OR SILTY CLAY)<br>WELL-GRADED SAND WITH CLAY AND GRAVEL (OR SILTY CLAY AND GRAVEL) | MH | ELASTIC SILT<br>ELASTIC SILT WITH SAND<br>ELASTIC SILT WITH GRAVEL<br>SANDY ELASTIC SILT<br>SANDY ELASTIC SILT WITH GRAVEL<br>GRAVELLY ELASTIC SILT<br>GRAVELLY ELASTIC SILT WITH SAND |
| SP-SM | POORLY-GRADED SAND WITH SILT<br>POORLY-GRADED SAND WITH SILT AND GRAVEL | | |
| SP-SC | POORLY-GRADED SAND WITH CLAY (OR SILTY CLAY)<br>POORLY-GRADED SAND WITH CLAY AND GRAVEL (OR SILTY CLAY AND GRAVEL) | OH | ORGANIC FAT CLAY<br>ORGANIC FAT CLAY WITH SAND<br>ORGANIC FAT CLAY WITH GRAVEL<br>SANDY ORGANIC FAT CLAY<br>SANDY ORGANIC FAT CLAY WITH GRAVEL<br>GRAVELLY ORGANIC FAT CLAY<br>GRAVELLY ORGANIC FAT CLAY WITH SAND |
| SM | SILTY SAND<br>SILTY SAND WITH GRAVEL | | |
| SC | CLAYEY SAND<br>CLAYEY SAND WITH GRAVEL | OH | ORGANIC ELASTIC SILT<br>ORGANIC ELASTIC SILT WITH SAND<br>ORGANIC ELASTIC SILT WITH GRAVEL<br>SANDY ORGANIC ELASTIC SILT<br>SANDY ORGANIC ELASTIC SILT WITH GRAVEL<br>GRAVELLY ORGANIC ELASTIC SILT<br>GRAVELLY ORGANIC ELASTIC SILT WITH SAND |
| SC-SM | SILTY, CLAYEY SAND<br>SILTY, CLAYEY SAND WITH GRAVEL | | |
| PT | PEAT | OL/OH | ORGANIC SOIL<br>ORGANIC SOIL WITH SAND<br>ORGANIC SOIL WITH GRAVEL<br>SANDY ORGANIC SOIL<br>SANDY ORGANIC SOIL WITH GRAVEL<br>GRAVELLY ORGANIC SOIL<br>GRAVELLY ORGANIC SOIL WITH SAND |
| | COBBLES<br>COBBLES AND BOULDERS<br>BOULDERS | | |

## FIELD AND LABORATORY TESTING

- (C) CONSOLIDATION (ASTM D2435)
- (CL) COLLAPSE POTENTIAL (ASTM D4546)
- (CP) COMPACTION CURVE (CTM 216)
- (CR) CORROSIVITY TESTING (CTM 643, CTM 422, CTM 417)
- (CU) CONSOLIDATED UNDRAINED TRIAXIAL (ASTM D4767)
- (DS) DIRECT SHEAR (ASTM D3080)
- (EI) EXPANSION INDEX (ASTM D4829)
- (M) MOISTURE CONTENT (ASTM D2216)
- (OC) ORGANIC CONTENT-% (ASTM D2974)
- (P) PERMEABILITY (CTM 220)
- (PA) PARTICLE SIZE ANALYSIS (ASTM D422)
- (PI) PLASTICITY INDEX (AASHTO T 90) LIQUID LIMIT (AASHTO T 89)
- (PL) POINT LOAD INDEX (ASTM D5731)
- (PM) PRESSURE METER
- (R) R-VALUE (CTM 301)
- (SE) SAND EQUIVALENT (CTM 217)
- (SG) SPECIFIC GRAVITY (AASHTO T 100)
- (SL) SHRINKAGE LIMIT (ASTM D4943)
- (SW) SWELL POTENTIAL (ASTM D4546)
- (UC) UNCONFINED COMPRESSION-SOIL (ASTM D2166) UNCONFINED COMPRESSION-ROCK (ASTM D7012 - METHOD C)
- (UU) UNCONSOLIDATED UNDRAINED TRIAXIAL (ASTM D2850)
- (UW) UNIT WEIGHT (ASTM D7263 - METHOD B)

## APPARENT DENSITY OF COHESIONLESS SOILS

| DESCRIPTION | SPT $N_{60}$ (BLOWS / 12 INCHES) |
|---|---|
| VERY LOOSE | 0 - 5 |
| LOOSE | 5 - 10 |
| MEDIUM DENSE | 10 - 30 |
| DENSE | 30 - 50 |
| VERY DENSE | GREATER THAN 50 |

## MOISTURE

| DESCRIPTION | CRITERIA |
|---|---|
| DRY | NO DISCERNABLE MOISTURE |
| MOIST | MOISTURE PRESENT, BUT NO FREE WATER |
| WET | VISIBLE FREE WATER |

## PERCENT OR PROPORTION OF SOILS

| DESCRIPTION | CRITERIA |
|---|---|
| TRACE | PARTICLES ARE PRESENT BUT ESTIMATED TO BE LESS THAN 5% |
| FEW | 5% - 10% |
| LITTLE | 15% - 25% |
| SOME | 30% - 45% |
| MOSTLY | 50% - 100% |

## PARTICLE SIZE

| DESCRIPTION | | SIZE |
|---|---|---|
| BOULDER | | GREATER THAN 12" |
| COBBLE | | 3" - 12" |
| GRAVEL | COARSE | 3/4" - 3" |
| | FINE | 1/5" - 3/4" |
| SAND | COARSE | 1/16" - 1/5" |
| | MEDIUM | 1/64" - 1/16" |
| | FINE | 1/300" - 1/64" |
| SILT AND CLAY | | LESS THAN 1/300" |

STATE OF CALIFORNIA
DEPARTMENT OF TRANSPORTATION

# LEGEND - SOIL (SHEET 2 OF 2)

NO SCALE

RSP A10G DATED OCTOBER 30, 2015 SUPERSEDES STANDARD PLAN A10G DATED MAY 20, 2011 - PAGE 7 OF THE STANDARD PLANS BOOK DATED 2010.

**REVISED STANDARD PLAN RSP A10G**

**2010 REVISED STANDARD PLAN RSP A10G**

DATE PLOTTED => 14-JAN-2016
TIME PLOTTED => 14:25

| Dist | COUNTY | ROUTE | POST MILES TOTAL PROJECT | SHEET No. | TOTAL SHEETS |
|---|---|---|---|---|---|
| 01 | DN | 102 | 17.4 | 24 | 74 |

REGISTERED CIVIL ENGINEER

July 20, 2012
PLANS APPROVAL DATE

REGISTERED PROFESSIONAL ENGINEER
Roberta L. McLaughlin
No. C40375
Exp. 3-31-13
CIVIL
STATE OF CALIFORNIA

*THE STATE OF CALIFORNIA OR ITS OFFICERS OR AGENTS SHALL NOT BE RESPONSIBLE FOR THE ACCURACY OR COMPLETENESS OF SCANNED COPIES OF THIS PLAN SHEET.*

TO ACCOMPANY PLANS DATED 01-11-16

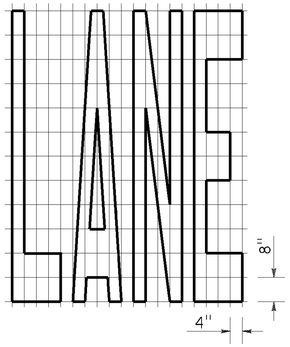


A=24 ft$^2$

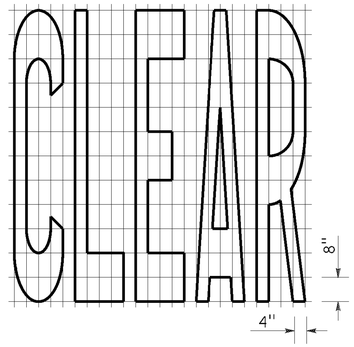


A=27 ft$^2$

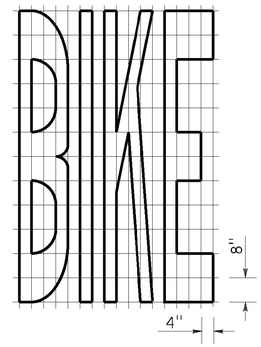


A=21 ft$^2$

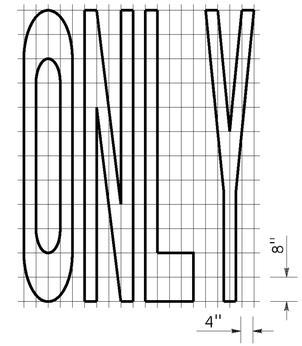


A=22 ft$^2$

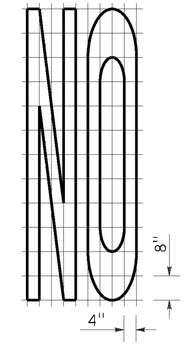


A=14 ft$^2$

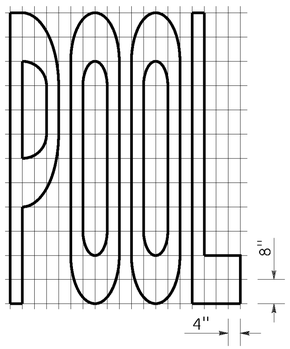


A=23 ft$^2$

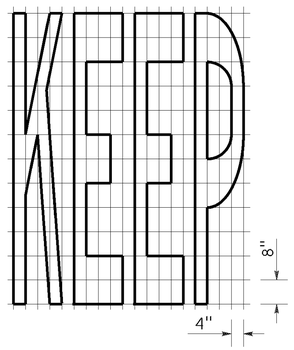


A=24 ft$^2$

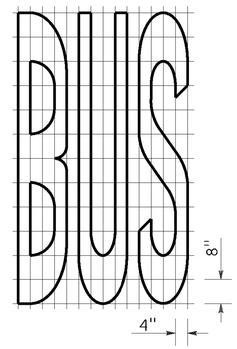


A=20 ft$^2$

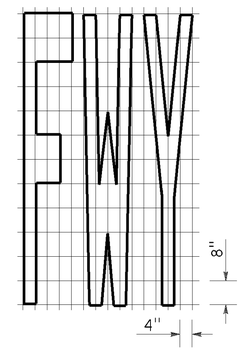


A=16 ft$^2$

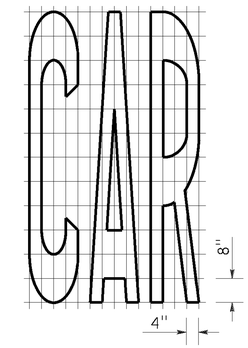


A=17 ft$^2$

| WORD MARKINGS | | | |
|---|---|---|---|
| ITEM | ft$^2$ | ITEM | ft$^2$ |
| LANE | 24 | NO | 14 |
| POOL | 23 | BIKE | 21 |
| CAR | 17 | BUS | 20 |
| CLEAR | 27 | ONLY | 22 |
| KEEP | 24 | FWY | 16 |

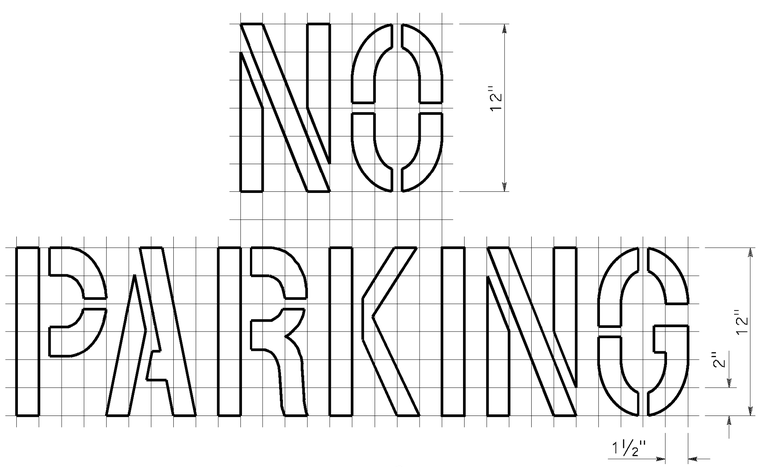


A=2 ft$^2$

See Notes 6 and 7

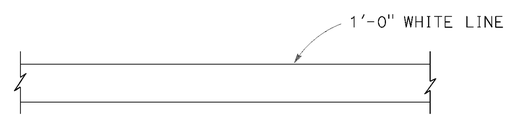


LIMIT LINE (STOP LINE)

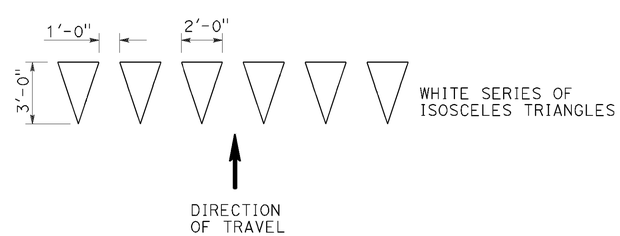


YIELD LINE

NOTES:

1. If a message consists of more than one word, it should read "UP", i.e., the first word should be nearest the driver.
2. The space between words should be at least four times the height of the characters for low speed roads, but not more than ten times the height of the characters. The space may be reduced appropriately where there is limited space because of local conditions.
3. Minor variations in dimensions may be accepted by the Engineer.
4. Portions of a letter, number or symbol may be separated by connecting segments not to exceed 2" in width.
5. The words "NO PARKING" pavement marking is to be used for parking facilities. For typical locations of markings, see Standard Plans A90A and A90B.
6. The words "NO PARKING", shall be painted in white letters no less than 1'-0" high on a contrasting background and located so that it is visible to traffic enforcement officials.

STATE OF CALIFORNIA
DEPARTMENT OF TRANSPORTATION

# PAVEMENT MARKINGS WORDS, LIMIT AND YIELD LINES

NO SCALE

RSP A24E DATED JULY 20, 2012 SUPERSEDES STANDARD PLAN A24E
DATED MAY 20, 2011 - PAGE 17 OF THE STANDARD PLANS BOOK DATED 2010.

**REVISED STANDARD PLAN RSP A24E**

**2010 REVISED STANDARD PLAN RSP A24E**

DATE PLOTTED => 14-JAN-2016
TIME PLOTTED => 14:25

| Dist | COUNTY | ROUTE | POST MILES TOTAL PROJECT | SHEET No. | TOTAL SHEETS |
|---|---|---|---|---|---|
| 01 | DN | 102 | 17.4 | 25 | 74 |

REGISTERED CIVIL ENGINEER

October 30, 2015
PLANS APPROVAL DATE

Carl M. Duan
No. C59976
Exp. 6-30-16
CIVIL
STATE OF CALIFORNIA
REGISTERED PROFESSIONAL ENGINEER

*THE STATE OF CALIFORNIA OR ITS OFFICERS OR AGENTS SHALL NOT BE RESPONSIBLE FOR THE ACCURACY OR COMPLETENESS OF SCANNED COPIES OF THIS PLAN SHEET.*

TO ACCOMPANY PLANS DATED 01-11-16

**2010 REVISED STANDARD PLAN RSP A62F**

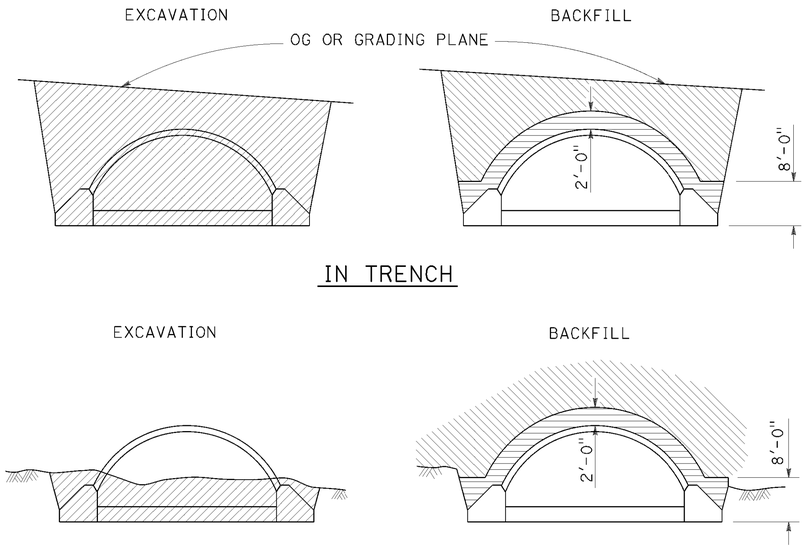


STRUCTURAL STEEL PLATE ARCHES

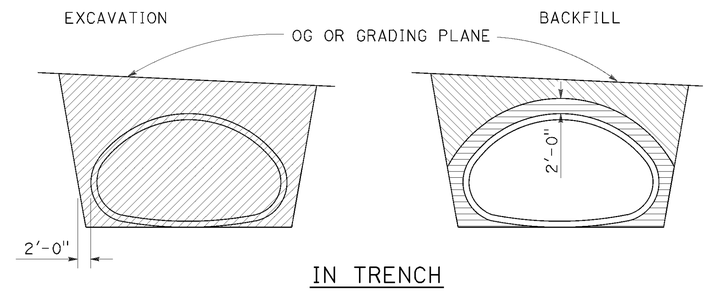


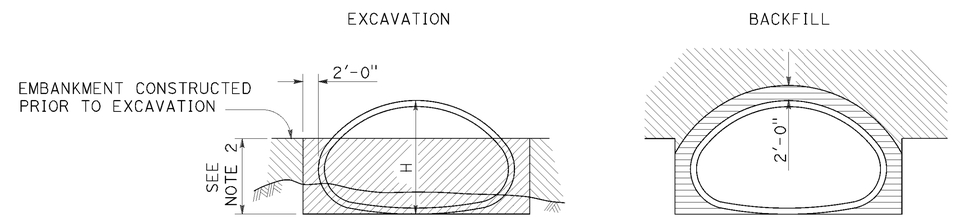


STRUCTURAL STEEL PLATE PIPE ARCHES
AND VEHICULAR UNDERCROSSING

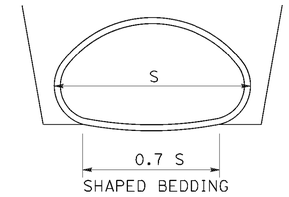


SHAPED BEDDING
S = Larger than 84"

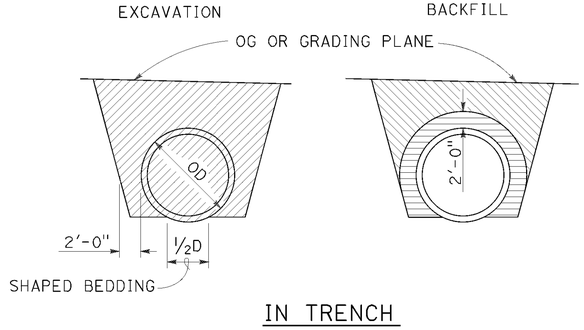


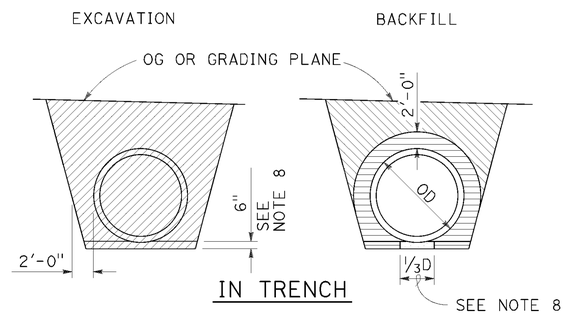


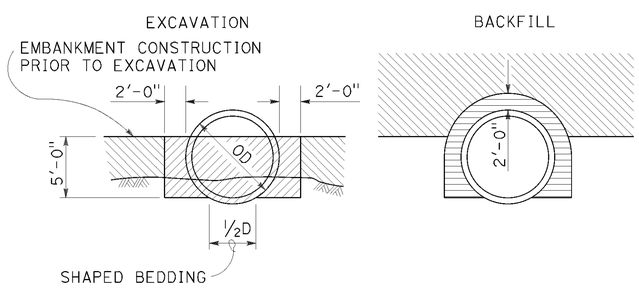


PIPES
Larger than 84"

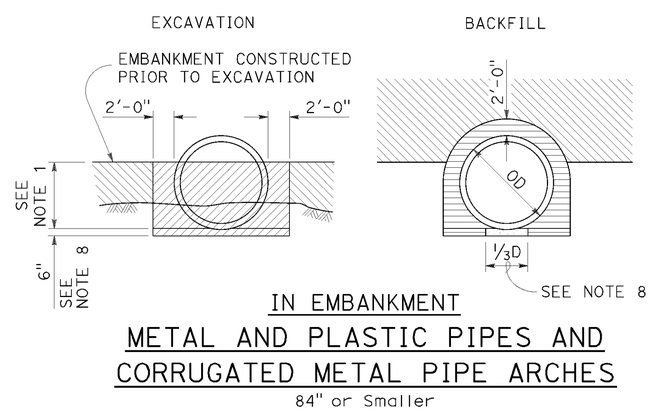


METAL AND PLASTIC PIPES AND
CORRUGATED METAL PIPE ARCHES
84" or Smaller

## NOTES:

1. PIPES: 30" minimum for diameters up to and including 42" then ⅔ diameter but no more than 60" required. CORRUGATED METAL PIPE ARCHES: 30" maximum.
2. ⅔ H up to 60" maximum.
3. Slope or shore excavation sides as necessary.
4. Backfill shall be placed full width of excavation except as noted.
5. Diagrams do not apply to overside drains.
6. Dimensions shown are minimum.
7. Construction strutting of structural steel plate pipe, arches and vehicular undercrossing to be used when shown on the project plans. When shown, see Standard Plan D88A for strutting requirements.
8. Excavation below pipe and 80% relative compaction requirements for plastic pipes only.
9. D is the inside diameter (ID) of the pipe.

## LEGEND

- STRUCTURE EXCAVATION (CULVERT)
- ROADWAY EMBANKMENT
- STRUCTURE BACKFILL (CULVERT) 95% RELATIVE COMPACTION
- STRUCTURE BACKFILL (CULVERT) 80% RELATIVE COMPACTION

STATE OF CALIFORNIA
DEPARTMENT OF TRANSPORTATION

# EXCAVATION AND BACKFILL METAL AND PLASTIC CULVERTS

NO SCALE

RSP A62F DATED OCTOBER 30, 2015 SUPERSEDES STANDARD PLAN A62F DATED MAY 20, 2011 - PAGE 26 OF THE STANDARD PLANS BOOK DATED 2010.

**REVISED STANDARD PLAN RSP A62F**

DATE PLOTTED => 14-JAN-2016
TIME PLOTTED => 14:25

| Dist | COUNTY | ROUTE | POST MILES TOTAL PROJECT | SHEET No. | TOTAL SHEETS |
|---|---|---|---|---|---|
| 01 | DN | 102 | 17.4 | 26 | 74 |

Randell D. Hiatt
REGISTERED CIVIL ENGINEER

July 19, 2013
PLANS APPROVAL DATE

REGISTERED PROFESSIONAL ENGINEER
Randell D. Hiatt
No. C50200
Exp. 6-30-15
CIVIL
STATE OF CALIFORNIA

*THE STATE OF CALIFORNIA OR ITS OFFICERS OR AGENTS SHALL NOT BE RESPONSIBLE FOR THE ACCURACY OR COMPLETENESS OF SCANNED COPIES OF THIS PLAN SHEET.*

TO ACCOMPANY PLANS DATED 01-11-16

**2010 REVISED STANDARD PLAN RSP A77L2**

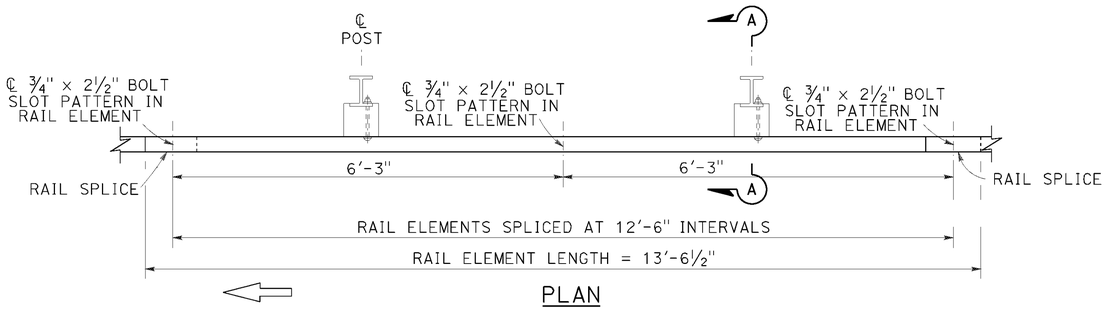


PLAN

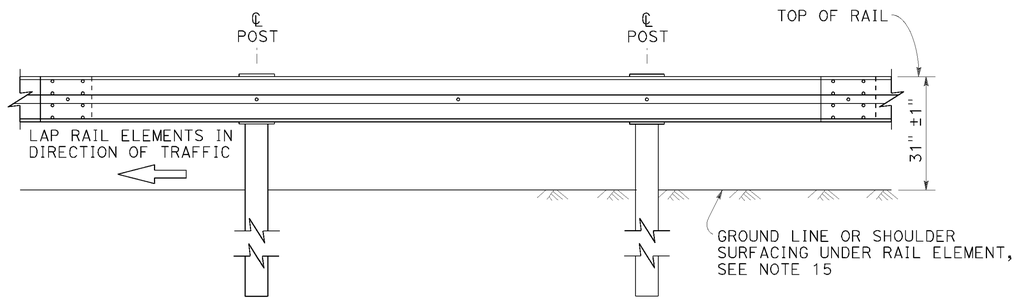


ELEVATION

## MIDWEST GUARDRAIL SYSTEM WITH STEEL POSTS AND NOTCHED WOOD OR NOTCHED RECYCLED PLASTIC BLOCKS

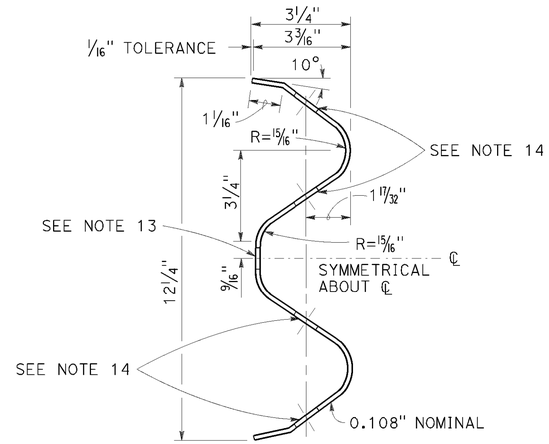


SECTION THRU RAIL ELEMENT

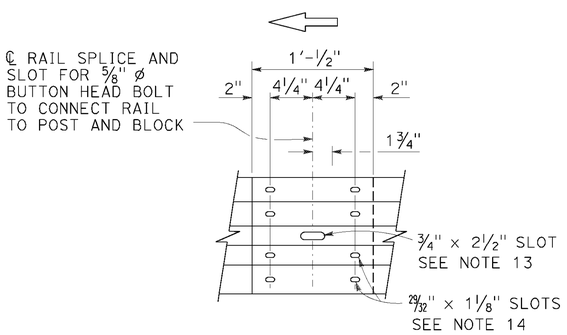


ELEVATION

## RAIL ELEMENT SPLICE DETAIL

a) Connect the over lapped end of the rail elements with ⅝" ø × 1⅜" button head oval shoulder splice bolts inserted into the 29⁄32" × 1⅛" slots and bolted together with ⅝" ø recessed hex nuts. Recess of hex nut points toward rail element. A total of 8 bolts and nuts are to be used at each rail splice connection.

b) The ends of the rail elements are to be overlapped in the direction of traffic (see details).

c) Where end cap is to be attached to the end of a rail element, a total of 4 of the above described splice bolts and nuts are to be used.

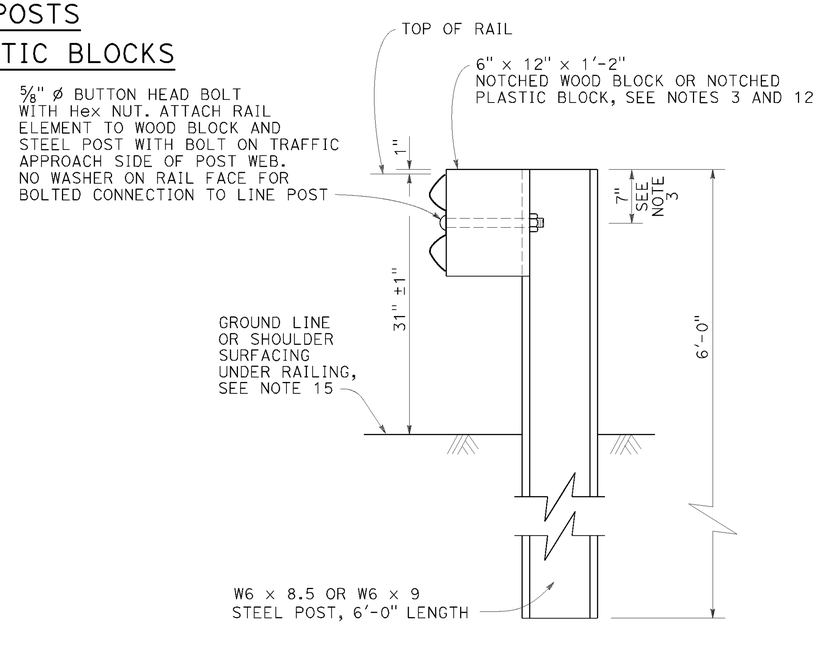


SECTION A-A

## TYPICAL STEEL LINE POST INSTALLATION

See Note 4

NOTES:

1. For details of wood post installations, see Revised Standard Plan RSP A77L1.
2. For details of standard hardware used to construct MGS, see Revised Standard Plan RSP A77M1.
3. For details of steel posts and notched wood blocks used to construct MGS, see Revised Standard Plan RSP A77N2.
4. For additional installation details, see Revised Standard Plan RSP A77N3.
5. MGS post spacing to be 6'-3" center to center, except as otherwise noted.
6. For MGS typical layouts, see the A77P, A77Q and A77R Series of Standard Plans.
7. If railing is connected to terminal system end treatment, use 31" height terminal system end treatment.
8. For MGS end anchor details, see Revised Standard Plans RSP A77S1 and RSP A77T2.
9. For details of MGS transition to bridge railing, see Revised Standard Plan RSP A77U4.
10. For additional details of MGS connection to bridge railings, see Revised Standard Plans RSP A77U1, RSP A77U2 and RSP A77V1.
11. For dike positioning and MGS delineation details, see Revised Standard Plan RSP A77N4.
12. Notched face of block faces steel post.
13. Slotted hole for bolted connection of rail element to block and post. See "Section Thru Rail Element".
14. Slotted holes for splice bolts to overlap ends of rail element. See "Section Thru Rail Element".
15. Install posts in soil.

STATE OF CALIFORNIA
DEPARTMENT OF TRANSPORTATION

# MIDWEST GUARDRAIL SYSTEM STANDARD RAILING SECTION (STEEL POST WITH NOTCHED WOOD OR NOTCHED RECYCLED PLASTIC BLOCK)

NO SCALE

RSP A77L2 DATED JULY 19, 2013 SUPPLEMENTS THE STANDARD PLANS BOOK DATED 2010.

**REVISED STANDARD PLAN RSP A77L2**

DATE PLOTTED => 14-JAN-2016
TIME PLOTTED => 14:26

| Dist | COUNTY | ROUTE | POST MILES TOTAL PROJECT | SHEET No. | TOTAL SHEETS |
|---|---|---|---|---|---|
| 01 | DN | 102 | 17.4 | 27 | 74 |

Randell D. Hiatt
REGISTERED CIVIL ENGINEER

July 19, 2013
PLANS APPROVAL DATE

REGISTERED PROFESSIONAL ENGINEER
Randell D. Hiatt
No. C50200
Exp. 6-30-15
CIVIL
STATE OF CALIFORNIA

*THE STATE OF CALIFORNIA OR ITS OFFICERS OR AGENTS SHALL NOT BE RESPONSIBLE FOR THE ACCURACY OR COMPLETENESS OF SCANNED COPIES OF THIS PLAN SHEET.*

TO ACCOMPANY PLANS DATED 01-11-16

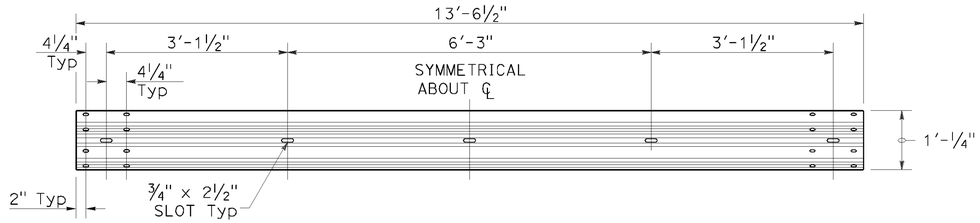


TYPICAL RAIL ELEMENT

NOTE:

1. Slotted holes for splice bolts to overlap ends of rail element.

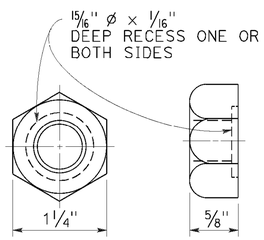


⅝" ø RECESS NUT

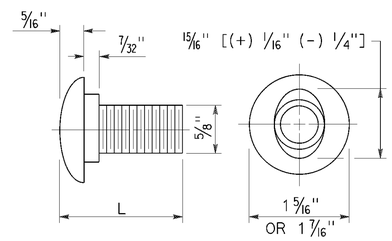


⅝" ø BUTTON HEAD BOLT

BUTTON HEAD BOLT

| L | THREAD LENGTH |
|---|---|
| 1⅜" | FULL THREAD LENGTH |
| 2" | FULL THREAD LENGTH |
| 10" | 4" Min THREAD LENGTH |
| 18" | 4" Min THREAD LENGTH |
| 20" | 4" Min THREAD LENGTH |
| 22" | 4" Min THREAD LENGTH |
| 26" | 4" Min THREAD LENGTH |
| 36" | 4" Min THREAD LENGTH |
| ** 2¾" | 2" Min THREAD LENGTH |
| ** 19" | 4" Min THREAD LENGTH |

** For nested rail applications.

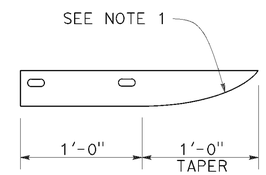


PLAN

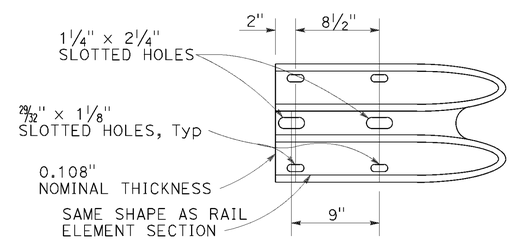


ELEVATION

END CAP
(TYPE A)

STATE OF CALIFORNIA
DEPARTMENT OF TRANSPORTATION

# MIDWEST GUARDRAIL SYSTEM STANDARD HARDWARE

NO SCALE

RSP A77M1 DATED JULY 19, 2013 SUPPLEMENTS THE STANDARD PLANS BOOK DATED 2010.

**REVISED STANDARD PLAN RSP A77M1**

**2010 REVISED STANDARD PLAN RSP A77M1**

DATE PLOTTED => 14-JAN-2016
TIME PLOTTED => 14:26

| Dist | COUNTY | ROUTE | POST MILES TOTAL PROJECT | SHEET No. | TOTAL SHEETS |
|---|---|---|---|---|---|
| 01 | DN | 102 | 17.4 | 28 | 74 |

Randell D. Hiatt
REGISTERED CIVIL ENGINEER

November 15, 2013
PLANS APPROVAL DATE

REGISTERED PROFESSIONAL ENGINEER
Randell D. Hiatt
No. C50200
Exp. 6-30-15
CIVIL
STATE OF CALIFORNIA

*THE STATE OF CALIFORNIA OR ITS OFFICERS OR AGENTS SHALL NOT BE RESPONSIBLE FOR THE ACCURACY OR COMPLETENESS OF SCANNED COPIES OF THIS PLAN SHEET.*

TO ACCOMPANY PLANS DATED 01-11-16

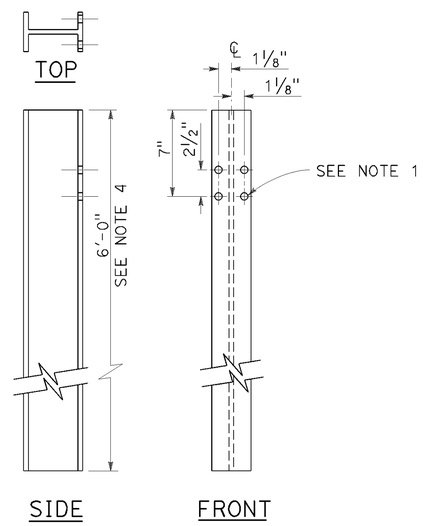


W6 x 9 OR W6 x 8.5
STEEL POST
See Note 4

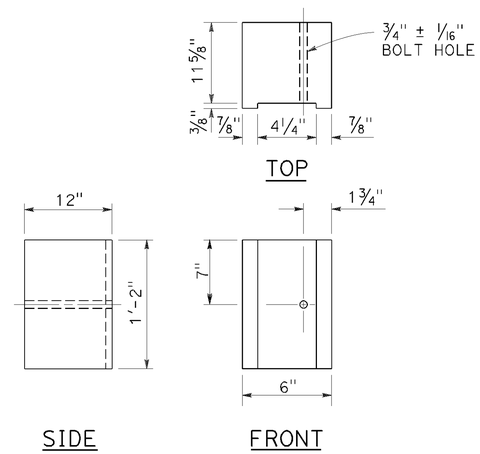


6" x 12"
NOTCHED WOOD BLOCK
See Notes 2 and 3

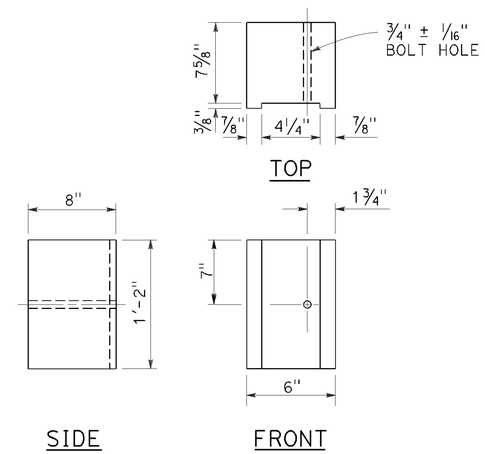


6" x 8"
NOTCHED WOOD BLOCK
Only for use with metal beam guard railing. See Note 5

## NOTES:

1. All holes in steel post shall be 13/16" Dia maximum.
2. Dimensions shown for wood block are nominal.
3. Notched face of block faces steel post.
4. 6'-0" length posts to be used for typical roadway installation. See Revised Standard Plan RSP A77N3.
5. See Revised Standard Plan RSP A77L3 for use of 6" x 8" and 8" x 8" notched wood blocks.
6. This post and 8" x 12" block combination to be used for line post sections of MGS on narrow roadways and where strengthened line post sections of MGS are warranted to shield fixed objects.

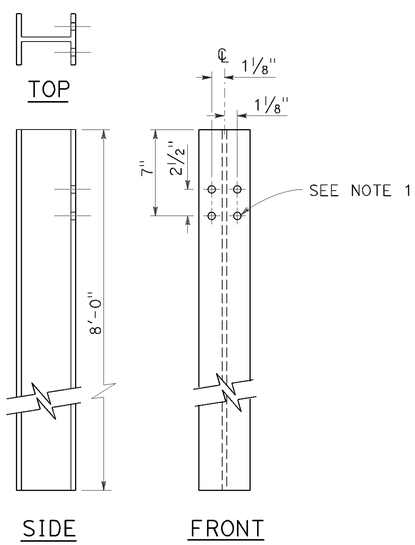


W6 x 15
STEEL POST
See Note 6

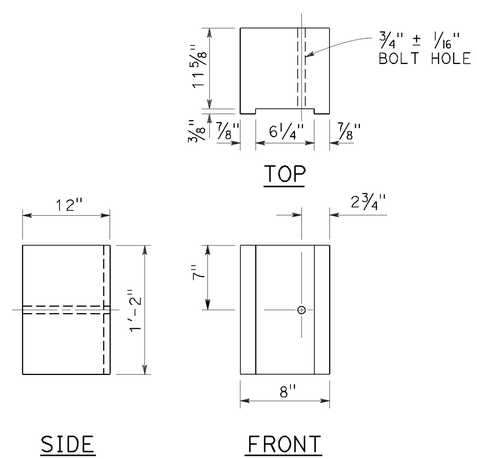


8" x 12"
NOTCHED WOOD BLOCK
See Notes 2 and 3

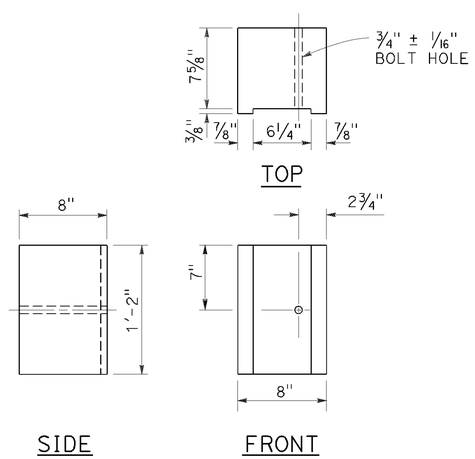


8" x 8"
NOTCHED WOOD BLOCK
Only for use with metal beam guard railing. See Note 5

STATE OF CALIFORNIA
DEPARTMENT OF TRANSPORTATION

# MIDWEST GUARDRAIL SYSTEM STEEL POST AND NOTCHED WOOD BLOCK DETAILS

NO SCALE

RSP A77N2 DATED NOVEMBER 15, 2013 SUPERSEDES RSP A77N2
DATED JULY 19, 2013 THAT SUPPLEMENTS THE STANDARD PLANS BOOK DATED 2010.

**REVISED STANDARD PLAN RSP A77N2**

**2010 REVISED STANDARD PLAN RSP A77N2**

DATE PLOTTED => 14-JAN-2016
TIME PLOTTED => 14:26

| Dist | COUNTY | ROUTE | POST MILES TOTAL PROJECT | SHEET No. | TOTAL SHEETS |
|---|---|---|---|---|---|
| 01 | DN | 102 | 17.4 | 29 | 74 |

Randell D. Hiatt
REGISTERED CIVIL ENGINEER

August 14, 2015
PLANS APPROVAL DATE

REGISTERED PROFESSIONAL ENGINEER
Randell D. Hiatt
No. C50200
Exp. 6-30-17
CIVIL
STATE OF CALIFORNIA

*THE STATE OF CALIFORNIA OR ITS OFFICERS OR AGENTS SHALL NOT BE RESPONSIBLE FOR THE ACCURACY OR COMPLETENESS OF SCANNED COPIES OF THIS PLAN SHEET.*

TO ACCOMPANY PLANS DATED 01-11-16

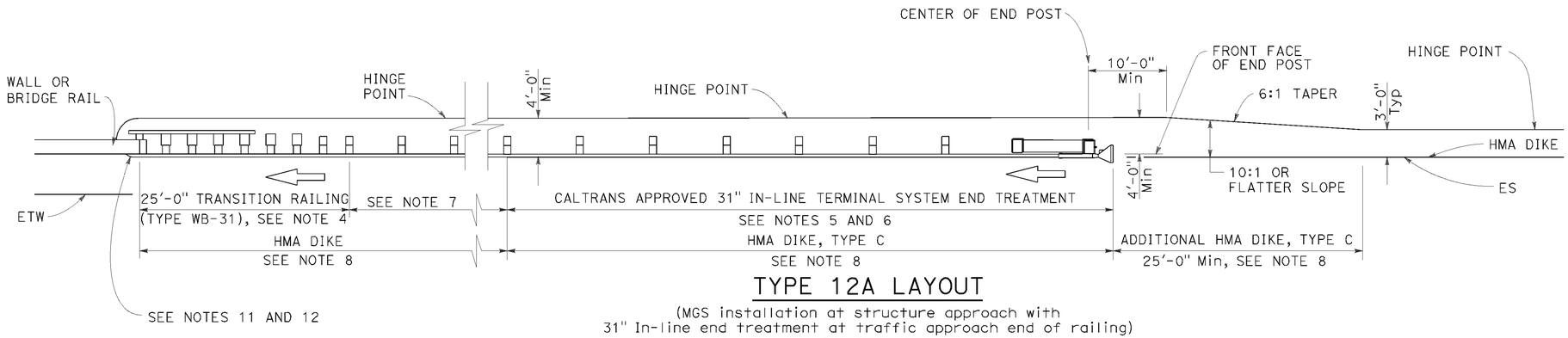


## TYPE 12A LAYOUT

(MGS installation at structure approach with
31" In-line end treatment at traffic approach end of railing)
See Note 9

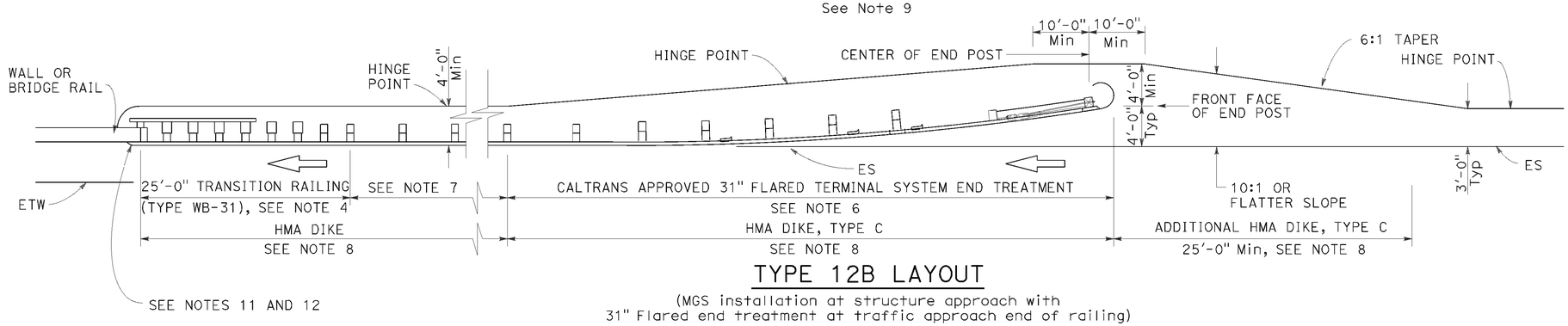


## TYPE 12B LAYOUT

(MGS installation at structure approach with
31" Flared end treatment at traffic approach end of railing)
See Note 9

## NOTES:

1. Line post, blocks and hardware to be used are shown on Revised Standard Plans RSP A77L1, RSP A77L2, RSP A77M1, RSP A77N1 and RSP A77N2.
2. MGS post spacing to be 6'-3" center to center, except as otherwise noted.
3. Except as noted, line posts are 6" x 8" x 6'-0" wood with 6" x 12" x 1'-2" wood blocks. W6 x 8.5 or W6 x 9 steel posts, 6'-0" in length, with 6" x 12" x 1'-2" notched wood blocks or plastic blocks may be used for 6" x 8" x 6'-0" wood posts with 6" x 12" x 1'-2" wood blocks where applicable and when specified.
4. For Transition Railing (Type WB-31) details for Types 12A and 12B Layouts, see Revised Standard Plan RSP A77U4.
5. 31" in-line terminal system end treatments are used where site conditions will not accommodate a 31" flared end treatment.
6. The type of 31" terminal system end treatment to be used will be shown on the Project Plans.
7. Dependent on site conditions (embankment height, side slopes, or other fixed objects), it may be advisable to construct additional guard railing (a length equal to multiples of 12'-6" with 6'-3" post spacing) between the transition railing and end treatment. A 12.5 degree angle of departure can be drawn on the Project Plans from the edge of traveled way through the outer most point of the fixed object to determine the additional length of railing needed.
8. Where placement of dike is required with guard railing installations, see Revised Standard Plan RSP A77N4 for dike positioning details.
9. Type 12A or Type 12B Layouts are typically used:
   a. To the right of approaching traffic, at the end of a structure, on two-lane conventional highway where the roadbed width across the structure is less than 40 feet.
   b. To the left of approaching traffic, at the end of a structure, on two-lane conventional highway where the roadbed width across the structure is less than 40 feet.
   c. To the right of approaching traffic at the end of each structure on multilane freeways or expressways with separate adjacent or parallel bridges.
   d. To the right of approaching traffic at the end of the structure on multilane freeways or expressways with decked median on the bridge.
10. See Revised Standard Plan RSP A77Q3 for typical layout used left of approaching traffic at the ends of each structure on multilane freeways or expressways with separate adjacent or parallel bridges.
11. For additional details of typical connections to bridge rail, see Connection Detail AA on Revised Standard Plans RSP A77U1 and RSP A77U2 and Connection Detail FF on Revised Standard Plans RSP A77V1 and RSP A77V2.
12. For additional details of a typical connection to walls or abutments, see Revised Standard Plan RSP A77U3.

STATE OF CALIFORNIA
DEPARTMENT OF TRANSPORTATION

# MIDWEST GUARDRAIL SYSTEM TYPICAL LAYOUTS FOR STRUCTURE APPROACH

NO SCALE

RSP A77Q1 DATED AUGUST 14, 2015 SUPERSEDES RSP A77Q1 DATED JULY 19, 2013 THAT SUPPLEMENTS THE STANDARD PLANS BOOK DATED 2010.

**REVISED STANDARD PLAN RSP A77Q1**

**2010 REVISED STANDARD PLAN RSP A77Q1**

DATE PLOTTED => 14-JAN-2016
TIME PLOTTED => 14:26

| Dist | COUNTY | ROUTE | POST MILES TOTAL PROJECT | SHEET No. | TOTAL SHEETS |
|---|---|---|---|---|---|
| 01 | DN | 102 | 17.4 | 30 | 74 |

Randell D. Hiatt
REGISTERED CIVIL ENGINEER

January 23, 2015
PLANS APPROVAL DATE

REGISTERED PROFESSIONAL ENGINEER
Randell D. Hiatt
No. C50200
Exp. 6-30-15
CIVIL
STATE OF CALIFORNIA

*THE STATE OF CALIFORNIA OR ITS OFFICERS OR AGENTS SHALL NOT BE RESPONSIBLE FOR THE ACCURACY OR COMPLETENESS OF SCANNED COPIES OF THIS PLAN SHEET.*

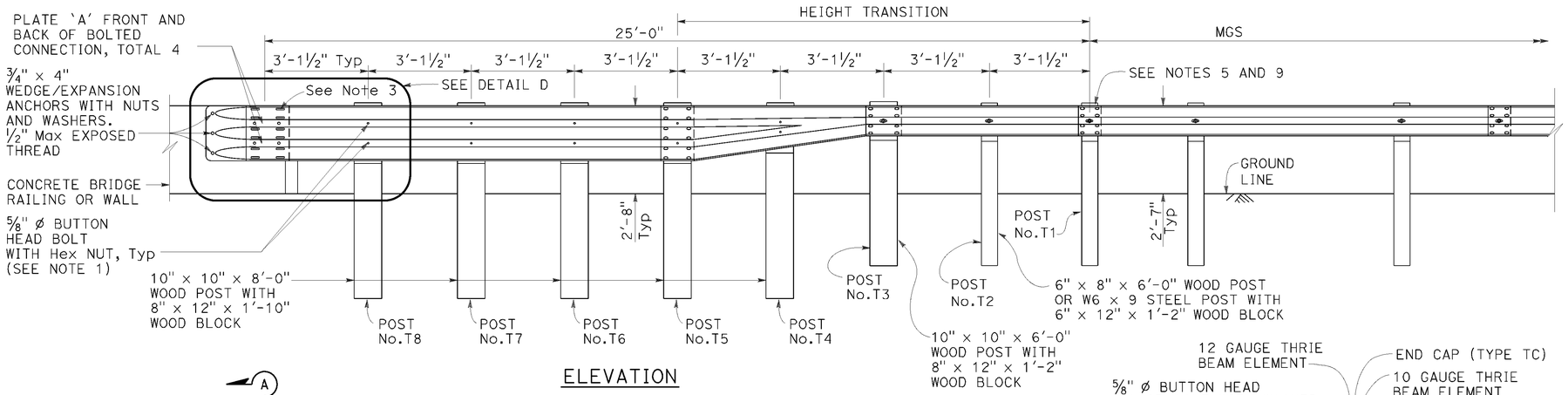


ELEVATION

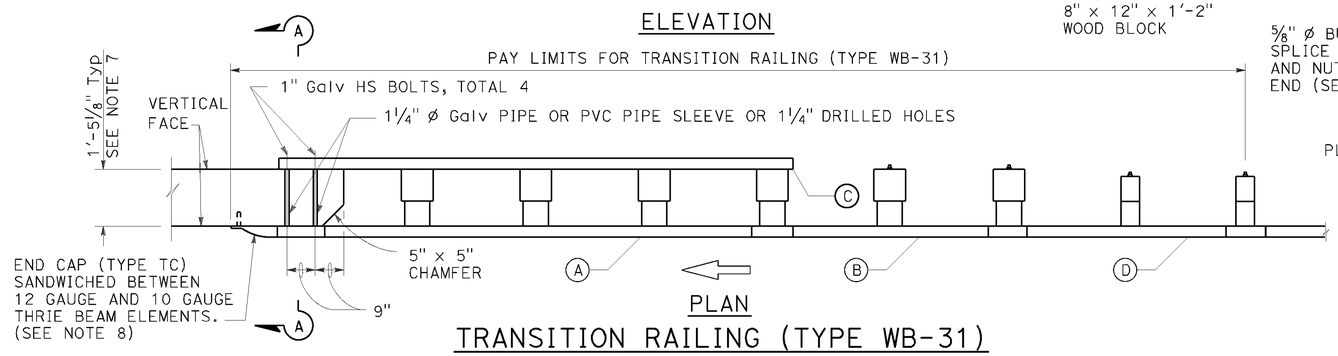


PLAN

TRANSITION RAILING (TYPE WB-31)

(No Blockout Attachment)

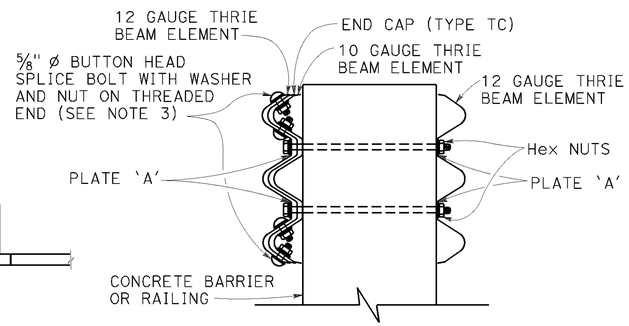


SECTION A-A

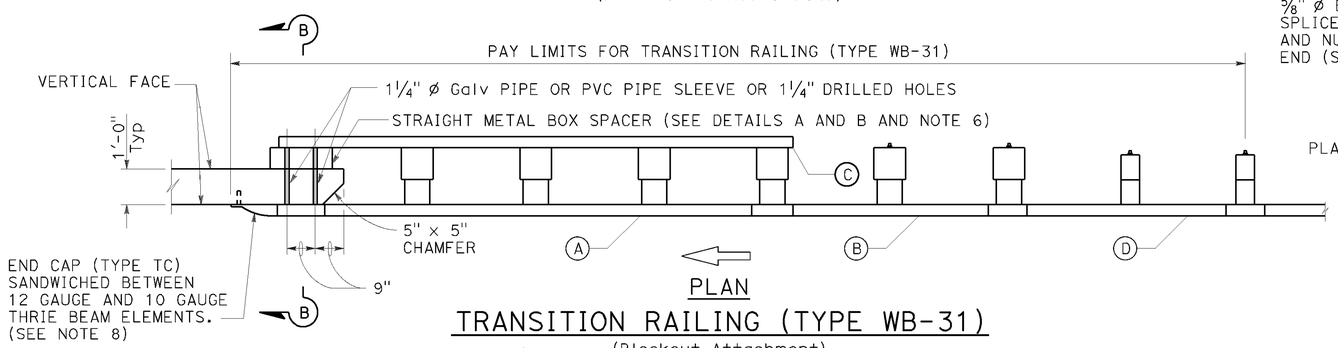


PLAN

TRANSITION RAILING (TYPE WB-31)

(Blockout Attachment)

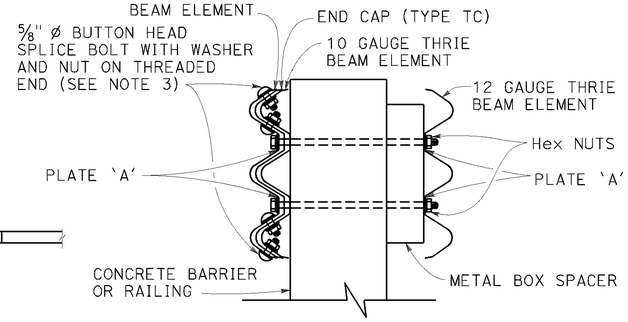


SECTION B-B

## NOTES:

TO ACCOMPANY PLANS DATED 01-11-16

1. Use 5/8" ø Button head bolts and hex nuts for connections to posts. No washer on rail face for bolted connections to post.
2. The nested rail elements, end cap, and 'W' beam to thrie beam element may be spliced together prior to bolting the elements to the wood post and concrete barrier or railing.
3. Exterior splice bolt holes for rail element splices at Post No. T5 and the connection to the concrete barrier or railing shall be the standard 29/32" × 1 1/8" slot size. Interior splice bolt holes at these locations may be increased up to 1 1/4" ø. Only the top 4 and the bottom 4 splice bolts with washers and nuts are required for rail splices at Post No. T5 and the connection to the concrete barrier or railing.
4. The top elevation of Posts No. T2 through No. T7 shall not project more than 1" above the top elevation of the rail element.
5. Typically, the railing connected to Transition Railing (Type WB-31) will be either standard railing section of MGS with height transition ratio of 150:1 or a Caltrans approved 31" end treatment attached to Post No. T1.
6. The depth of the metal box spacer varies from the 9 1/8" to 1 1/2" and is dependent on the width of the concrete railing or wall. The combined dimension for the depth of the metal box spacer plus the width of railing or wall is typically 21 1/8". Where the space between the backside of the concrete railing or wall and the rear thrie beam element is less than 1 1/2", metal plates similar to Plate 'A' are to be used as spacers.
7. Where the width of the concrete railing or wall is greater than 17 1/8", wood blocks are to be used to fill the space created between the backside of Posts No. T5 through No. T8 and the rear thrie beam element. These wood blocks shall be 8" in width and 1'-2" in length. The dimension between the front thrie beam element and the rear thrie beam element is to match the width of the concrete railing or wall.
8. End cap may be installed over 12 gauge and 10 gauge thrie beam elements where transition railing is installed on the departure end of bridge railing.
9. Conform standard railing section height to 31" at Post No. T1 using height transition ratio of 150:1.

## LEGEND:

(A) NESTED THRIE BEAM ELEMENTS (ONE 12 GAUGE ELEMENT NESTED OVER ONE 10 GAUGE ELEMENT).

(B) ONE ASYMMETRICAL 10 GAUGE "W" BEAM TO THRIE BEAM ELEMENT.

(C) ONE 12 GAUGE THRIE BEAM ELEMENT.

(D) ONE 10 GAUGE "W" BEAM RAIL ELEMENT (7'-3 1/2"LENGTH)

10 GAUGE = 0.138" THICK
12 GAUGE = 0.108" THICK

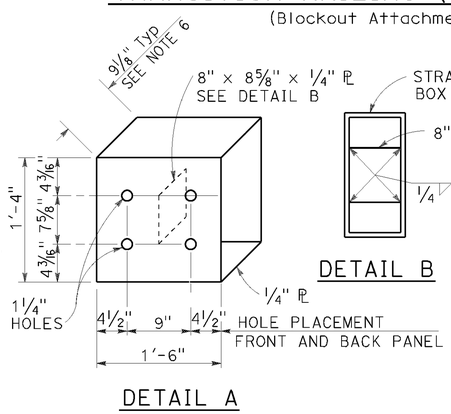


DETAIL A

STRAIGHT METAL BOX SPACER

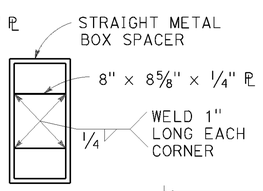


DETAIL B

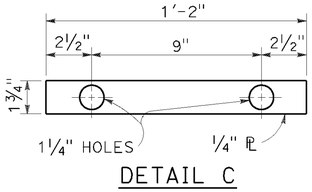


DETAIL C

PLATE 'A'

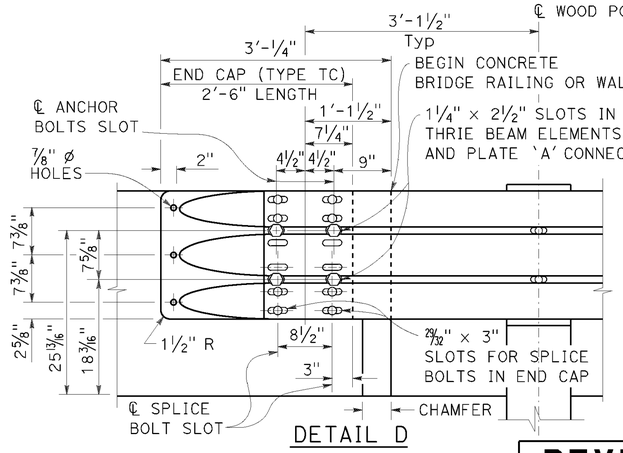


DETAIL D

# MIDWEST GUARDRAIL SYSTEM TRANSITION RAILING (TYPE WB-31)

NO SCALE

RSP A77U4 DATED JANUARY 23, 2015 SUPERSEDES RSP A77U4 DATED NOVEMBER 15, 2013 AND RSP A77U4 DATED JULY 19, 2013 THAT SUPPLEMENTS THE STANDARD PLANS BOOK DATED 2010.

STATE OF CALIFORNIA
DEPARTMENT OF TRANSPORTATION

**REVISED STANDARD PLAN RSP A77U4**

**2010 REVISED STANDARD PLAN RSP A77U4**

DATE PLOTTED => 14-JAN-2016
TIME PLOTTED => 14:26

| Dist | COUNTY | ROUTE | POST MILES TOTAL PROJECT | SHEET No. | TOTAL SHEETS |
|---|---|---|---|---|---|
| 01 | DN | 102 | 17.4 | 31 | 74 |

REGISTERED CIVIL ENGINEER

October 30, 2015
PLANS APPROVAL DATE

REGISTERED PROFESSIONAL ENGINEER Carl M. Duan No. C59976 Exp. 6-30-16 CIVIL STATE OF CALIFORNIA

*THE STATE OF CALIFORNIA OR ITS OFFICERS OR AGENTS SHALL NOT BE RESPONSIBLE FOR THE ACCURACY OR COMPLETENESS OF SCANNED COPIES OF THIS PLAN SHEET.*

TO ACCOMPANY PLANS DATED 01-11-16

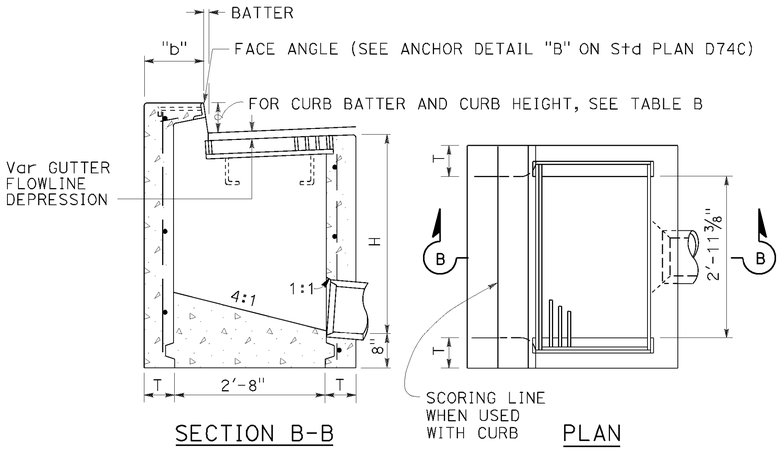


SECTION B-B PLAN

TYPE GO

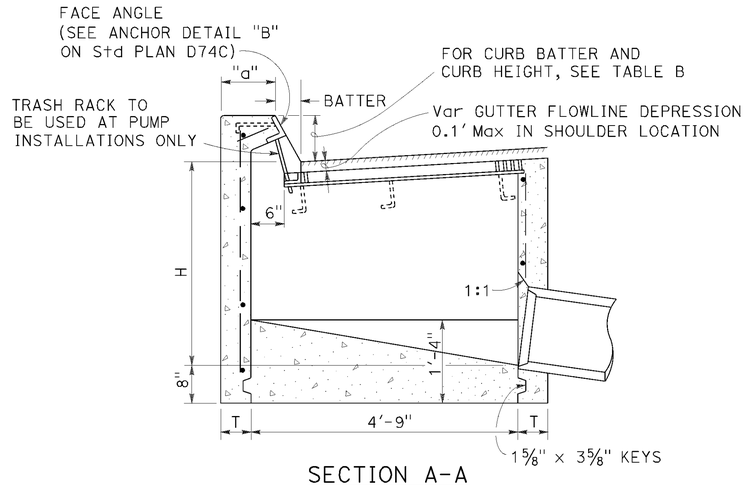


SECTION A-A

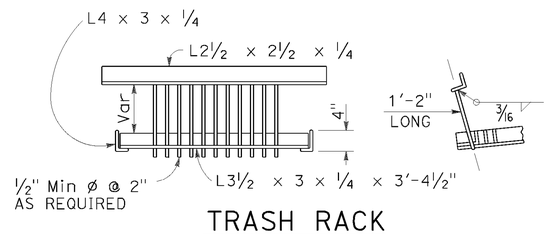


TRASH RACK
(For use with pump installation)

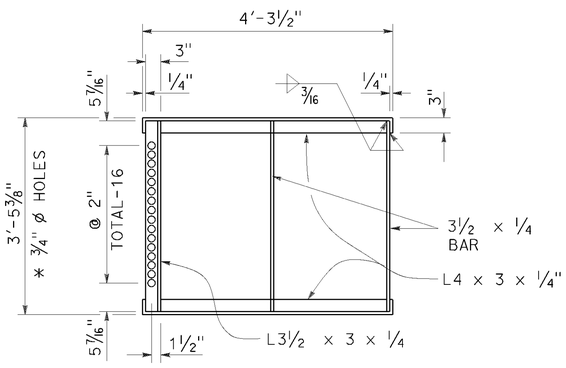


* 3/4" ø Holes required only with trash rack

GRATE FRAME FOR TYPE GDO INLET

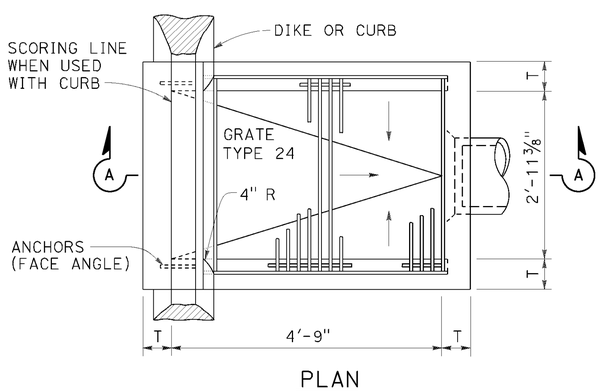


PLAN

TYPE GDO

TABLE A

| CONCRETE QUANTITIES | | | | |
|---|---|---|---|---|
| TYPE | H=3'-0" TO 8'-0" (T=6") | | H=8'-1" TO 20'-0" (T=8") | |
| | H=3'-0" (CY) | ADDITIONAL PCC PER FOOT (CY) | H=8'-1" (CY) | ADDITIONAL PCC PER FOOT (CY) |
| GO | 1.24 | 0.245 | 3.39 | 0.346 |
| GDO | 1.62 | 0.322 | 4.36 | 0.446 |

Table based on 8" floor slab, and curb type giving highest quantity of concrete. no deductions or adjustments are to be made to these quantities because of pipe openings, different floor alternatives or different curb type.

TABLE B

| CURB TYPE | NORMAL CURB HEIGHT | CURB BATTER | "a" DIMENSION | "b" DIMENSION |
|---|---|---|---|---|
| A1-6 | 6" | 1 1/2" | T+7 1/2" | T+6 1/2" |
| A1-8 | 8" | 2" | T+7" | T+6" |
| B1-6 | 6" | 4" | T+5" | T+4" |
| TYPE A DIKE | 6" | 3" | T+6" | T+5" |

NOTES:

1. "H" is the difference in elevation between the outlet pipe flow line and the normal gutter grade line undepressed.
2. For "T" wall thickness, see Table A below.
3. Wall reinforcing not required when "H" is 8'-0" or less and the unsupported width or length is 7'-0" or less. Walls exceeding these limits shall be reinforced with #4 @ 18"± centers placed 1 1/2" clear to inside of box unless otherwise shown.
4. Inlet bottom reinforcing not required. See Standard Plan D74C for alternative reinforced bottom.
5. Steps - None required where "H" is less than 2'-6" Where "H" is 2'-6" or more, install steps with lowest rung 1'-0" above the floor and highest rung not more than 6" below top of inlet. The distance between steps shall not exceed 1'-0" and shall be uniform throughout the length of the wall. Place steps in the wall without an opening. Step inserts may be substituted for the bar steps. Step Inserts shall comply with State Industrial Safety requirements. See Standard Plan D74C for step details.
6. When shown on the project plans, place a 3/4" plain round protection bar horizontally across the length of the opening and bend back 4" into the inlet wall on each side.
7. Pipe(s) can be placed in any wall.
8. Curb section shall match adjacent curb.
9. Basin floors shall have wood trowel finish and shall slope toward the outlet pipe as shown.
10. See Revised Standard Plans RSP D77A and RSP D77B for grate and frame details and weights of miscellaneous iron and Steel.
11. See Standard Plan D78A for gutter depression details.
12. Complete joint penetration butt welds may be substituted for the fillet welds on all anchors.
13. Standard square, hexagon, round or equivalent headed anchors may be substituted for the right angle hooks on the anchors shown on this plan.
14. Cast-in-place inlets to be formed around all pipes/stubs intersecting the inlet and concrete poured in one continuous operation. Precast inlets shall have mortared pipe connections conforming to details for Type GCP inlets on Revised Standard Plan RSP D75B. See Standard Specifications for mortar composition.

STATE OF CALIFORNIA
DEPARTMENT OF TRANSPORTATION

**DRAINAGE INLETS**

NO SCALE

RSP D74B DATED OCTOBER 30, 2015 SUPERSEDES STANDARD PLAN D74B DATED MAY 20, 2011 - PAGE 159 OF THE STANDARD PLANS BOOK DATED 2010.

**REVISED STANDARD PLAN RSP D74B**

**2010 REVISED STANDARD PLAN RSP D74B**

DATE PLOTTED => 14-JAN-2016
TIME PLOTTED => 14:27

| Dist | COUNTY | ROUTE | POST MILES TOTAL PROJECT | SHEET No. | TOTAL SHEETS |
|---|---|---|---|---|---|
| 01 | DN | 102 | 17.4 | 32 | 74 |

REGISTERED CIVIL ENGINEER

April 19, 2013
PLANS APPROVAL DATE

REGISTERED PROFESSIONAL ENGINEER Raymond Don Tsztoo No. C37332 Exp. 6-30-14 CIVIL STATE OF CALIFORNIA

*THE STATE OF CALIFORNIA OR ITS OFFICERS OR AGENTS SHALL NOT BE RESPONSIBLE FOR THE ACCURACY OR COMPLETENESS OF SCANNED COPIES OF THIS PLAN SHEET.*

TO ACCOMPANY PLANS DATED 01-11-16

**2010 REVISED STANDARD PLAN RSP D77B**

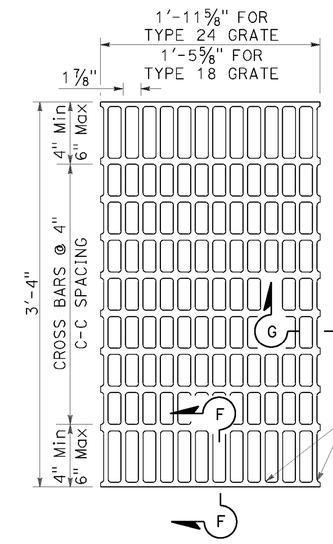


## NOTES:

Bearing bars to be 3½" × ¼" bars on 1⅞" centers.

⅜"± ø Cross bars may be fillet welded, resistance welded or electroforged to bearing bars.

Weight of Type 24 grate = 141 LBS.

Weight of Type 18 grate = 107 LBS. (Type 24 grate shown).

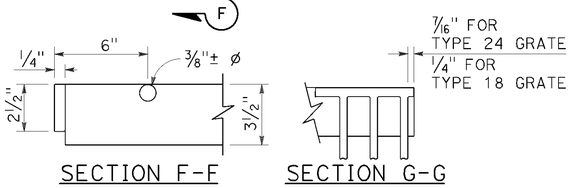


SECTION F-F SECTION G-G

## TYPE 18-10 AND 24-13 GRATE

(Welded Steel)

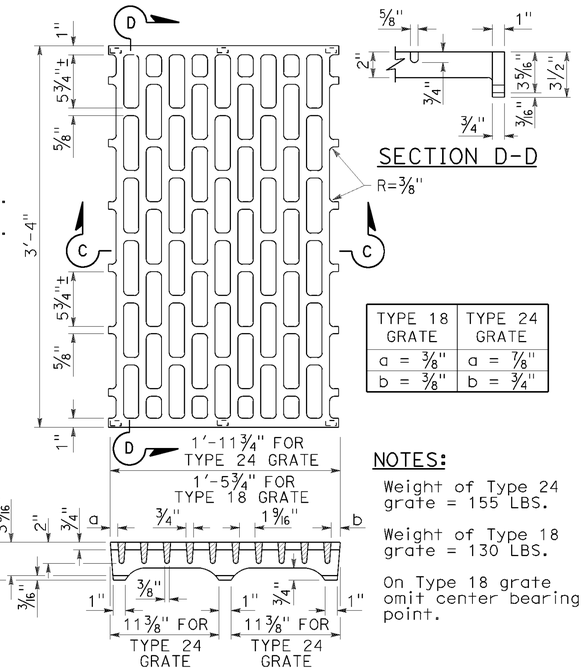


| TYPE 18 GRATE | TYPE 24 GRATE |
|---|---|
| a = ⅜" | a = ⅞" |
| b = ⅜" | b = ¾" |

SECTION D-D

## NOTES:

Weight of Type 24 grate = 155 LBS.

Weight of Type 18 grate = 130 LBS.

On Type 18 grate omit center bearing point.

SECTION C-C

## TYPE 18-8C AND 24-10C GRATE

(Cast ductile iron)

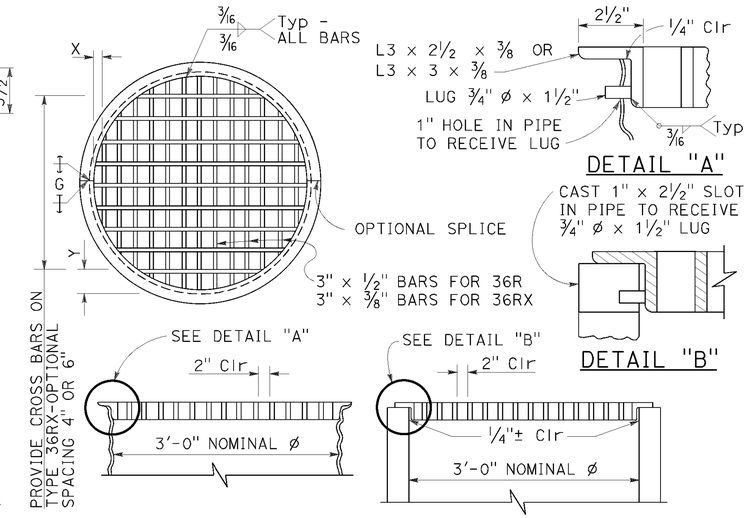


DETAIL "A"

DETAIL "B"

## TYPE 36R AND 36RX GRATE DETAILS

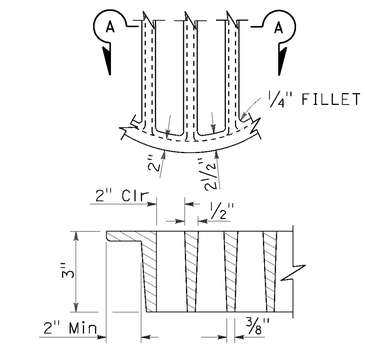


SECTION A-A

## ALTERNATIVE CAST DUCTILE IRON GRATE OR CAST CARBON STEEL GRATE TYPE 36R AND 36RX

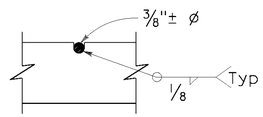


⅜"± ø Cross bars may be fillet welded, resistance welded or electroforged to bearing bars.

CROSS BAR DETAIL TYPE 36RX GRATE (WELDED STEEL)

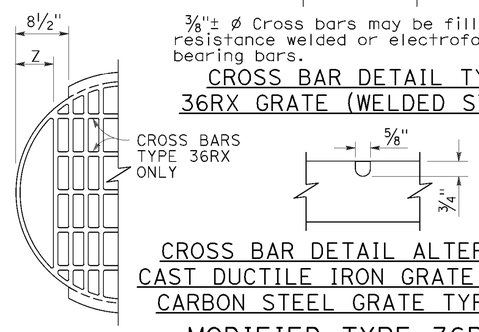


CROSS BAR DETAIL ALTERNATIVE CAST DUCTILE IRON GRATE OR CAST CARBON STEEL GRATE TYPE 36RX

## MODIFIED TYPE 36R AND 36RX GRATE FOR ODI INLET

BASIS FOR Misc IRON AND STEEL FINAL PAY WEIGHTS FOR DRAINAGE INLETS

| INLET TYPE | GRATE TYPE | No. OF GRATES | WEIGHT LB |
|---|---|---|---|
| GDO (SEE NOTE 4) | 24-10C | 2 | 391 |
| | 24-10S | 2 | 456 |
| | 24-12X | 2 | 473 |
| | 24-13 | 2 | 374 |
| GO,GOL,G1,G2, G3,G4 (TYPE 24) | 24-10C | 1 | 202 |
| | 24-10S | 1 | 229 |
| | 24-12X | 1 | 239 |
| | 24-13 | 1 | 188 |
| G4 (TYPE 18) G5,G6 | 18-8S | 1 | 187 |
| | 18-9X | 1 | 187 |
| | 18-10 | 1 | 149 |
| GT1,GT2 | 18-8S | 2 | 374 |
| | 18-9X | 2 | 374 |
| | 18-10 | 2 | 298 |
| GT3,GT4 | 24-10C | 2 | 404 |
| | 24-10S | 2 | 458 |
| | 24-12X | 2 | 478 |
| | 24-13 | 2 | 376 |
| ODI | 36RX (Mod) | 1 | 196 |
| GMP,GCP,GCPI | 36RX | 1 | 215 |
| ODI | 36R (Mod) | 1 | 220 |
| GMP,GCP,GCPI | 36R | 1 | 236 |
| TRASH RACK | | | 22 |
| GRATE CHAIN | | | 3 |

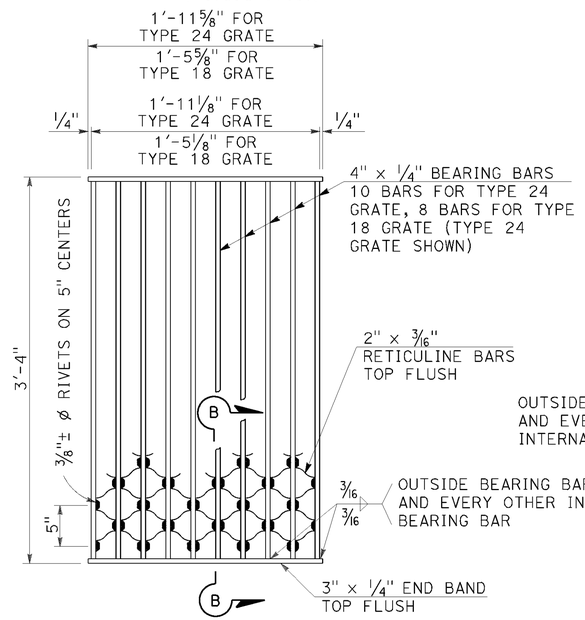

## NOTES:

Weight of Type 24 grate = 182 LBS.
Weight of Type 18 grate = 145 LBS.

SECTION B-B

## TYPE 18-8S AND 24-10S GRATE

(Welded Steel) Reticuline type

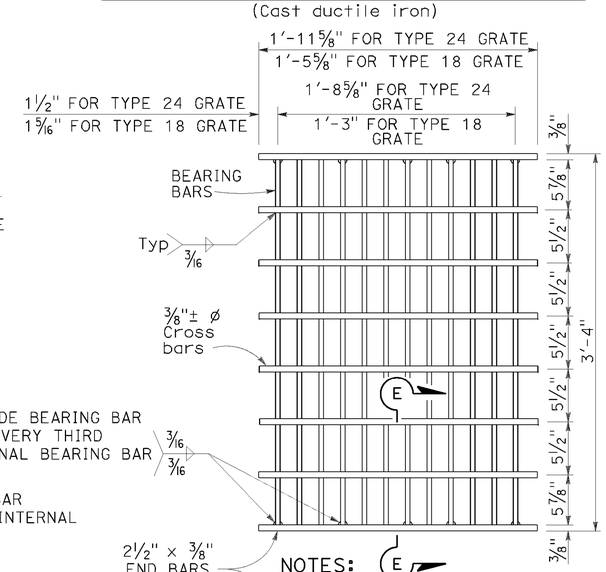


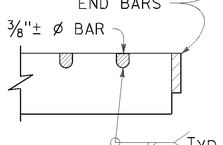


SECTION E-E

## NOTES:

Bearing bars to be 3½" × ⅜" bars on 1⅞" centers.

12 Bars for Type 24 grate - 9 bars for Type 18 grates. (Type 24 grate shown).

Weight of Type 24 grate = 192 LBS.

Weight of Type 18 grate = 145 LBS.

⅜"± ø Cross bars may be fillet welded, resistance welded or electroforged to bearing bars.

## TYPE 18-9X AND 24-12X GRATE

(Welded Steel)

## NOTES:

1. When alternative grates are allowed - Final pay based on alternative with the lesser weight.
2. Use frame shown on Standard Plan D74A, D74B or RSP D77A as appropriate.
3. When Type 24-10S, 24-12X or 24-13 grates are used with GDO Inlets, a ¼" × 3½" × 3'-4⅞" steel bar shall be welded across the center of inlet frame to separate the individual grates.
4. See Revised Standard Plan RSP D77A for connecting chain to welded grate and frame. When chain is required, do not use cast ductile iron grate.

GRATE BAR SPACING TABLE

| TYPE | No. OF BARS | CLEAR BAR SPACING | X | Y 4" SPACING | Y 6" SPACING | Z |
|---|---|---|---|---|---|---|
| 36R | 13 | 2" | 2⅛" | - | - | - |
| 36RX (STEEL) | 15 | 2" | 9/16" | 3¾" | 5¾" | - |
| 36RX (CAST) | 13 | 2" | 2⅛" | 3¾" | 5¾" | - |
| 36R Mod | 12 | 2" | 2⅛" | - | - | 5" |
| 36RX Mod (STEEL) | 13 | 2" | 9/16" | 3¾" | 5¾" | 5 11/16" |
| 36RX Mod (CAST) | 12 | 2" | 2⅛" | 3¾" | 5¾" | 5" |

STATE OF CALIFORNIA
DEPARTMENT OF TRANSPORTATION

# GRATE DETAILS No. 2

NO SCALE

RSP D77B DATED APRIL 19, 2013 SUPERSEDES RSP D77B DATED JULY 20, 2012 AND STANDARD PLAN D77B DATED MAY 20, 2011 - PAGE 165 OF THE STANDARD PLANS BOOK DATED 2010.

# REVISED STANDARD PLAN RSP D77B

DATE PLOTTED => 14-JAN-2016
TIME PLOTTED => 14:27

| Dist | COUNTY | ROUTE | POST MILES TOTAL PROJECT | SHEET No. | TOTAL SHEETS |
|---|---|---|---|---|---|
| 01 | DN | 102 | 17.4 | 33 | 74 |

Gregory A. Balzer
LICENSED LANDSCAPE ARCHITECT

July 19, 2013
PLANS APPROVAL DATE

LICENSED LANDSCAPE ARCHITECT
Gregory A. Balzer 2516
Gregory A. Balzer
Original Date 2-28-15
Renewal Date 7-19-13
Date
STATE OF CALIFORNIA

*THE STATE OF CALIFORNIA OR ITS OFFICERS OR AGENTS SHALL NOT BE RESPONSIBLE FOR THE ACCURACY OR COMPLETENESS OF SCANNED COPIES OF THIS PLAN SHEET.*

TO ACCOMPANY PLANS DATED 01-11-16

## A

| | |
|---|---|
| AB | AGGREGATE BASE |
| ABS | ACRYLONITRILE-BUTADIENE-STYRENE |
| AC | ASPHALT CONCRETE |
| ACC | ARMOR-CLAD CONDUCTORS |
| Adj | ADJACENT/ADJUSTABLE |
| AIC | AUXILIARY IRRIGATION CONTROLLER |
| Alt | ALTERNATIVE |
| AMEND | AMENDMENT |
| ARV | AIR RELEASE VALVE |
| AUTO | AUTOMATIC |
| AUX | AUXILIARY |
| AVB | ATMOSPHERIC VACUUM BREAKER |

## B

| | |
|---|---|
| B&B | BALLED AND BURLAPPED |
| B/B | BRASS/BRONZE |
| B/B/PL | BRASS/BRONZE/PLASTIC |
| B/PL | BRASS/PLASTIC |
| BFM | BONDED FIBER MATRIX |
| Bit Ctd | BITUMINOUS COATED |
| BP | BOOSTER PUMP |
| BPA | BACKFLOW PREVENTER ASSEMBLY |
| BPE | BACKFLOW PREVENTER ENCLOSURE |
| BV | BALL VALVE |

## C

| | |
|---|---|
| C | CONDUIT |
| CAP | CORRUGATED ALUMINUM PIPE |
| CARV | COMBINATION AIR RELEASE VALVE |
| CB | COUPLING BAND |
| CCA | CAM COUPLER ASSEMBLY |
| CEC | CONTROLLER ENCLOSURE CABINET |
| CHDPE | CORRUGATED HIGH DENSITY POLYETHYLENE |
| CL | CHAIN LINK |
| CNC | CONTROL AND NEUTRAL CONDUCTORS |
| Conc | CONCRETE |
| CP | COPPER PIPE |
| CS | COMPOST SOCK |
| CSP | CORRUGATED STEEL PIPE |
| CST | CENTER STRIP |
| CV | CHECK VALVE |

## D

| | |
|---|---|
| Dia | DIAMETER |
| DIP | DUCTILE IRON PIPE |
| DIT | DRIP IRRIGATION TUBING |
| DG | DECOMPOSED GRANITE |
| DN | DIAMETER NOMINAL |
| DVA | DRIP VALVE ASSEMBLY |

## E

| | |
|---|---|
| EC | EROSION CONTROL |
| ECTC | EROSION CONTROL TECHNOLOGY COUNCIL |
| Elect | ELECTRIC/ELECTRICAL |
| Elev | ELEVATION |
| ELL | ELBOW |
| ENCL | ENCLOSURE |
| EP | EDGE OF PAVEMENT |
| ES | EDGE OF SHOULDER |
| EST | END STRIP |
| ESTB | ESTABLISHMENT |
| ETW | EDGE OF TRAVELED WAY |

## F

| | |
|---|---|
| F | FULL CIRCLE |
| F/P | FULL/PART CIRCLE |
| FCV | FLOW CONTROL VALVE |
| FERT | FERTILIZER |
| FG | FINISHED GRADE |
| FH | FLEXIBLE HOSE |
| FIPT | FEMALE IRON PIPE THREAD |
| FIS | FERTILIZER INJECTOR SYSTEM |
| FL | FLOW LINE |
| FR | FIBER ROLL |
| FS | FLOW SENSOR |
| FSC | FLOW SENSOR CABLE |
| FV | FLUSH VALVE |

## G

| | |
|---|---|
| Galv | GALVANIZED |
| GARV | GARDEN VALVE |
| GARVA | GARDEN VALVE ASSEMBLY |
| GM | GRAVEL MULCH |
| GPH | GALLONS PER HOUR |
| GPM | GALLONS PER MINUTE |
| GSP | GALVANIZED STEEL PIPE |
| GV | GATE VALVE |

## H

| | |
|---|---|
| H | HALF CIRCLE |
| HDPE | HIGH DENSITY POLYETHYLENE |
| HP | HORSEPOWER/HINGE POINT |
| HPL | HIGH PRESSURE LINE |
| Hwy | HIGHWAY |

## I

| | |
|---|---|
| IC | IRRIGATION CONTROLLER |
| ICC | IRRIGATION CONTROLLER(S) IN CONTROLLER ENCLOSURE CABINET |
| ID | INSIDE DIAMETER |
| IFS | IRRIGATION FILTRATION SYSTEM |
| IPS | IRON PIPE SIZE |
| IPT | IRON PIPE THREAD |
| Irr | IRRIGATION |

## L

| | |
|---|---|
| L | LENGTH |

## M

| | |
|---|---|
| Max | MAXIMUM |
| MBGR | METAL BEAM GUARD RAILING |
| MCV | MANUAL CONTROL VALVE |
| MIC | MASTER IRRIGATION CONTROLLER |
| Min | MINIMUM |
| MIPT | MALE IRON PIPE THREAD |
| Misc | MISCELLANEOUS |
| Mtl | MATERIAL |
| MVP | MAINTENANCE VEHICLE PULLOUT |

## N

| | |
|---|---|
| NCN | NO COMMON NAME |
| NL | NOZZLE LINE |
| No. | NUMBER |
| NPT | NATIONAL PIPE THREAD |

## O

| | |
|---|---|
| O/C | ON CENTER |
| OD | OUTSIDE DIAMETER |
| OL | OVERLAP |

## P

| | |
|---|---|
| P | PART CIRCLE |
| PB | PULL BOX |
| PCC | PORTLAND CEMENT CONCRETE |
| PE | POLYETHYLENE |
| Pkt | PACKET |
| PL | PLASTIC |
| PLS | PURE LIVE SEED |
| PLT | PLANT/PLANTING |
| PLT ESTB | PLANT ESTABLISHMENT |
| PM | POST MILE |
| PR | PRESSURE RATED |
| PRLV | PRESSURE RELIEF VALVE |
| PRV | PRESSURE REGULATING VALVE |
| PVC | POLYVINYL CHLORIDE |
| Pvmt | PAVEMENT |

## Q

| | |
|---|---|
| Q | QUARTER CIRCLE |
| QCV | QUICK COUPLING VALVE |

**NOTE:**

For additional abbreviations, see Standard Plans A10A and A10B.

## R

| | |
|---|---|
| R | RADIUS |
| RCP | REINFORCED CONCRETE PIPE |
| RCV | REMOTE CONTROL VALVE |
| RCVM | REMOTE CONTROL VALVE (MASTER) |
| RCVMF | REMOTE CONTROL VALVE (MASTER) W/FLOW SENSOR |
| RCVP | REMOTE CONTROL VALVE W/PRESSURE REGULATOR |
| RCW | RECYCLED WATER |
| RECP | ROLLED EROSION CONTROL PRODUCT |
| REQ | REQUIRED |
| RICS | REMOTE IRRIGATION CONTROL SYSTEM |
| R/W | RIGHT OF WAY |

## S

| | |
|---|---|
| S | SLIP |
| SCH | SCHEDULE |
| SF | STATE-FURNISHED |
| Shld | SHOULDER |
| Sq | SQUARE |
| SST | SIDE STRIP |
| Sta | STATION |
| Std | STANDARD |
| SW | SIDEWALK/SOUND WALL |

## T

| | |
|---|---|
| T | THIRD CIRCLE/THREAD |
| TLS | TRUCK LOADING STANDPIPE |
| TQ | THREE QUARTER CIRCLE |
| TRM | TURF REINFORCEMENT MAT |
| TT | TWO-THIRDS CIRCLE |
| TWSA | TREE WELL SPRINKLER ASSEMBLY |
| Typ | TYPICAL |

## U

| | |
|---|---|
| UG | UNDERGROUND |

## W

| | |
|---|---|
| W | WIDTH |
| W/ | WITH |
| WM | WATER METER |
| WS | WYE STRAINER |
| WSA | WYE STRAINER ASSEMBLY |
| WSP | WELDED STEEL PIPE |
| WWM | WELDED WIRE MESH |

STATE OF CALIFORNIA
DEPARTMENT OF TRANSPORTATION

# LANDSCAPE AND EROSION CONTROL ABBREVIATIONS

NO SCALE

RSP H1 DATED JULY 19, 2013 SUPERSEDES STANDARD PLAN H1 DATED MAY 20, 2011 - PAGE 218 OF THE STANDARD PLANS BOOK DATED 2010.

**REVISED STANDARD PLAN RSP H1**

**2010 REVISED STANDARD PLAN RSP H1**

DATE PLOTTED => 14-JAN-2016
TIME PLOTTED => 14:27

| Dist | COUNTY | ROUTE | POST MILES TOTAL PROJECT | SHEET No. | TOTAL SHEETS |
|---|---|---|---|---|---|
| 01 | DN | 102 | 17.4 | 34 | 74 |

LICENSED LANDSCAPE ARCHITECT

November 15, 2013
PLANS APPROVAL DATE

Gregory A. Balzer 2516
LICENSED LANDSCAPE ARCHITECT
2-28-15
RENEWAL DATE
11-15-13
DATE
STATE OF CALIFORNIA

*THE STATE OF CALIFORNIA OR ITS OFFICERS OR AGENTS SHALL NOT BE RESPONSIBLE FOR THE ACCURACY OR COMPLETENESS OF SCANNED COPIES OF THIS PLAN SHEET.*

TO ACCOMPANY PLANS DATED 01-11-16

**2010 REVISED STANDARD PLAN RSP H2**

| EXISTING | NEW | ITEM DESCRIPTION |
|---|---|---|
| | | WATER METER (WM) |
| | | BACKFLOW PREVENTER ASSEMBLY (BPA) |
| | | BACKFLOW PREVENTER ENCLOSURE (BPE) |
| | | BOOSTER PUMP (BP) |
| | | TRUCK LOADING STANDPIPE (TLS) |
| | FS | FLOW SENSOR (FS) |
| X | X | MASTER IRRIGATION CONTROLLER (MIC) |
| | | AUXILIARY IRRIGATION CONTROLLER (AIC) |
| | | IRRIGATION CONTROLLER (IC)<br>IRRIGATION CONTROLLER (IC) (BATTERY)<br>IRRIGATION CONTROLLER (IC) (SOLAR)<br>IRRIGATION CONTROLLER (IC) (TWO WIRE)<br>IRRIGATION CONTROLLER(S) IN CONTROLLER ENCLOSURE CABINET (ICC) |
| acc | ACC | ARMOR-CLAD CONDUCTORS (ACC) |
| cnc | CNC | CONTROL AND NEUTRAL CONDUCTORS (CNC) |
| | | IRRIGATION CONDUIT |
| | | EXTEND IRRIGATION CONDUIT |
| dip | DIP | DUCTILE IRON PIPE (SUPPLY LINE) (MAIN) (DIP) |
| | | GALVANIZED STEEL PIPE (SUPPLY LINE) (MAIN) (GSP) |
| | | GALVANIZED STEEL PIPE (SUPPLY LINE) (LATERAL) (GSP) |
| | | PLASTIC PIPE (SUPPLY LINE) (MAIN) |
| | | PLASTIC PIPE (SUPPLY LINE) (LATERAL) |
| cp | CP | COPPER PIPE (SUPPLY LINE) |
| dit | DIT | DRIP IRRIGATION TUBING |
| | | REMOTE CONTROL VALVE (RCV)<br>REMOTE CONTROL VALVE (MASTER) (RCVM)<br>REMOTE CONTROL VALVE (MASTER) W/FLOW METER (RCVMF) |
| P | P | REMOTE CONTROL VALVE W/PRESSURE REGULATOR (RCVP) |
| | | EXISTING MANUAL CONTROL VALVE (MCV) |
| | V | DRIP VALVE ASSEMBLY (DVA) |
| Y | Y | WYE STRAINER ASSEMBLY (WSA) |

| EXISTING | NEW | ITEM DESCRIPTION |
|---|---|---|
| | | GATE VALVE (GV) |
| | | BALL VALVE (BV) |
| | | QUICK COUPLING VALVE (QCV) |
| | | CAM COUPLER ASSEMBLY (CCA) |
| | | GARDEN VALVE ASSEMBLY (GARVA) |
| | | PRESSURE REGULATING VALVE (PRV) |
| | | PRESSURE RELIEF VALVE (PRLV) |
| | | FLOW CONTROL VALVE (FCV) |
| | | COMBINATION AIR RELEASE VALVE (CARV) |
| | | CHECK VALVE (CV) |
| | | FLUSH VALVE (FV) |
| | | EXISTING NOZZLE LINE W/TURNING UNION |
| | | EXISTING IRRIGATION SYSTEM |
| | | EXISTING IRRIGATION SYSTEM TO BE REMOVED |
| | | CHAIN LINK GATE |
| | | QUICK COUPLING VALVE W/SPRINKLER PROTECTOR |
| 3 | 3 | SPRINKLER W/SPRINKLER PROTECTOR |
| | C | CONNECT TO EXISTING SYSTEM |
| | | CAP |
| | | CAP EXISTING |
| | \\\FR\\\ | FIBER ROLL |
| | \\\CS\\\ | COMPOST SOCK |

RCV SIZE
IRRIGATION CONTROLLER
CONTROLLER STATION
VALVE IN PARALLEL (IF APPLICABLE)
GPM
QUANTITY OF SPRINKLERS (WHEN SHOWN)

* 2½"-A-2b-40-60

## VALVE CODE

* VALVE CODES FOR EXISTING VALVES ARE SHOWN IN A DASHED ENCLOSURE.

STATE OF CALIFORNIA
DEPARTMENT OF TRANSPORTATION

# LANDSCAPE AND EROSION CONTROL SYMBOLS

NO SCALE

RSP H2 DATED NOVEMBER 15, 2013 SUPERSEDES RSP H2 DATED JULY 19, 2013 AND STANDARD PLAN H2 DATED MAY 20, 2011 - PAGE 219 OF THE STANDARD PLANS BOOK DATED 2010.

**REVISED STANDARD PLAN RSP H2**

DATE PLOTTED => 14-JAN-2016
TIME PLOTTED => 14:27

| Dist | COUNTY | ROUTE | POST MILES TOTAL PROJECT | SHEET No. | TOTAL SHEETS |
|---|---|---|---|---|---|
| 01 | DN | 102 | 17.4 | 35 | 74 |

REGISTERED CIVIL ENGINEER

July 19, 2013
PLANS APPROVAL DATE

REGISTERED PROFESSIONAL ENGINEER Gurinderpal Bhullar No. C48815 Exp. 9-30-14 CIVIL STATE OF CALIFORNIA

THE STATE OF CALIFORNIA OR ITS OFFICERS OR AGENTS SHALL NOT BE RESPONSIBLE FOR THE ACCURACY OR COMPLETENESS OF SCANNED COPIES OF THIS PLAN SHEET.

TO ACCOMPANY PLANS DATED 01-11-16

2010 REVISED STANDARD PLAN RSP T9

## TABLE 1

### TAPER LENGTH CRITERIA AND CHANNELIZING DEVICE SPACING

| SPEED (S) | MINIMUM TAPER LENGTH * FOR WIDTH OF OFFSET 12 FEET (W) | | | | MAXIMUM CHANNELIZING DEVICE SPACING | | |
|---|---|---|---|---|---|---|---|
| | | | | | X | Y | Z ** |
| | TANGENT 2L | MERGING L | SHIFTING L/2 | SHOULDER L/3 | TAPER | TANGENT | CONFLICT |
| mph | ft | ft | ft | ft | ft | ft | ft |
| 20 | 160 | 80 | 40 | 27 | 20 | 40 | 10 |
| 25 | 250 | 125 | 63 | 42 | 25 | 50 | 12 |
| 30 | 360 | 180 | 90 | 60 | 30 | 60 | 15 |
| 35 | 490 | 245 | 123 | 82 | 35 | 70 | 17 |
| 40 | 640 | 320 | 160 | 107 | 40 | 80 | 20 |
| 45 | 1080 | 540 | 270 | 180 | 45 | 90 | 22 |
| 50 | 1200 | 600 | 300 | 200 | 50 | 100 | 25 |
| 55 | 1320 | 660 | 330 | 220 | 55 | 110 | 27 |
| 60 | 1440 | 720 | 360 | 240 | 60 | 120 | 30 |
| 65 | 1560 | 780 | 390 | 260 | 65 | 130 | 32 |
| 70 | 1680 | 840 | 420 | 280 | 70 | 140 | 35 |

* - For other offsets, use the following merging taper length formula for L:
For speed of 40 mph or less, $L = WS^2/60$
For speed of 45 mph or more, $L = WS$

Where: L = Taper length in feet
W = Width of offset in feet
S = Posted speed limit, off-peak 85th-percentile speed prior to work starting, or the anticipated operating speed in mph

** - Use for taper and tangent sections where there are no pavement markings or where there is a conflict between existing pavement markings and channelizers (CA).

## TABLE 2

### LONGITUDINAL BUFFER SPACE AND FLAGGER STATION SPACING

| SPEED * | Min D ** | DOWNGRADE Min D *** | | |
|---|---|---|---|---|
| | | -3% | -6% | -9% |
| mph | ft | ft | ft | ft |
| 20 | 115 | 116 | 120 | 126 |
| 25 | 155 | 158 | 165 | 173 |
| 30 | 200 | 205 | 215 | 227 |
| 35 | 250 | 257 | 271 | 287 |
| 40 | 305 | 315 | 333 | 354 |
| 45 | 360 | 378 | 400 | 427 |
| 50 | 425 | 446 | 474 | 507 |
| 55 | 495 | 520 | 553 | 593 |
| 60 | 570 | 598 | 638 | 686 |
| 65 | 645 | 682 | 728 | 785 |
| 70 | 730 | 771 | 825 | 891 |

* - Speed is posted speed limit, off-peak 85th-percentile speed prior to work starting, or the anticipated operating speed in mph

** - Longitudinal buffer space or flagger station spacing

*** - Use on sustained downgrade steeper than -3 percent and longer than 1 mile.

## TABLE 3

### ADVANCE WARNING SIGN SPACING

| ROAD TYPE | DISTANCE BETWEEN SIGNS * | | |
|---|---|---|---|
| | A | B | C |
| | ft | ft | ft |
| URBAN - 25 mph OR LESS | 100 | 100 | 100 |
| URBAN - MORE THAN 25 mph TO 40 mph | 250 | 250 | 250 |
| URBAN - MORE THAN 40 mph | 350 | 350 | 350 |
| RURAL | 500 | 500 | 500 |
| EXPRESSWAY / FREEWAY | 1000 | 1500 | 2640 |

* - The distances are approximate, are intended for guidance purposes only, and should be applied with engineering judgment. These distances should be adjusted by the Engineer for field conditions, if necessary, by increasing or decreasing the recommmended distances.

STATE OF CALIFORNIA
DEPARTMENT OF TRANSPORTATION

# TRAFFIC CONTROL SYSTEM TABLES FOR LANE AND RAMP CLOSURES

NO SCALE

RSP T9 DATED JULY 19, 2013 SUPERSEDES RSP T9 DATED APRIL 19, 2013 THAT SUPPLEMENTS THE STANDARD PLANS BOOK DATED 2010.

**REVISED STANDARD PLAN RSP T9**

DATE PLOTTED => 14-JAN-2016
TIME PLOTTED => 14:27

| Dist | COUNTY | ROUTE | POST MILES TOTAL PROJECT | SHEET No. | TOTAL SHEETS |
|---|---|---|---|---|---|
| 01 | DN | 102 | 17.4 | 36 | 74 |

REGISTERED CIVIL ENGINEER

April 19, 2013
PLANS APPROVAL DATE

REGISTERED PROFESSIONAL ENGINEER Gurinderpal Bhullar No. C48815 Exp. 9-30-14 CIVIL STATE OF CALIFORNIA

THE STATE OF CALIFORNIA OR ITS OFFICERS OR AGENTS SHALL NOT BE RESPONSIBLE FOR THE ACCURACY OR COMPLETENESS OF SCANNED COPIES OF THIS PLAN SHEET.

TO ACCOMPANY PLANS DATED 01-11-16

## NOTES:

See Revised Standard Plan RSP T9 for tables.

Use cone spacing X for taper segment, Y for tangent segment or Z for conflict situations, as approriate, per Table 1, unless X, Y, or Z cone spacing is shown on this sheet.

Unless otherwise specified in the special provisions, all temporary warning signs shall have black legend on fluorescent orange background.

California codes are designated by (CA). Otherwise, Federal (MUTCD) codes are shown.

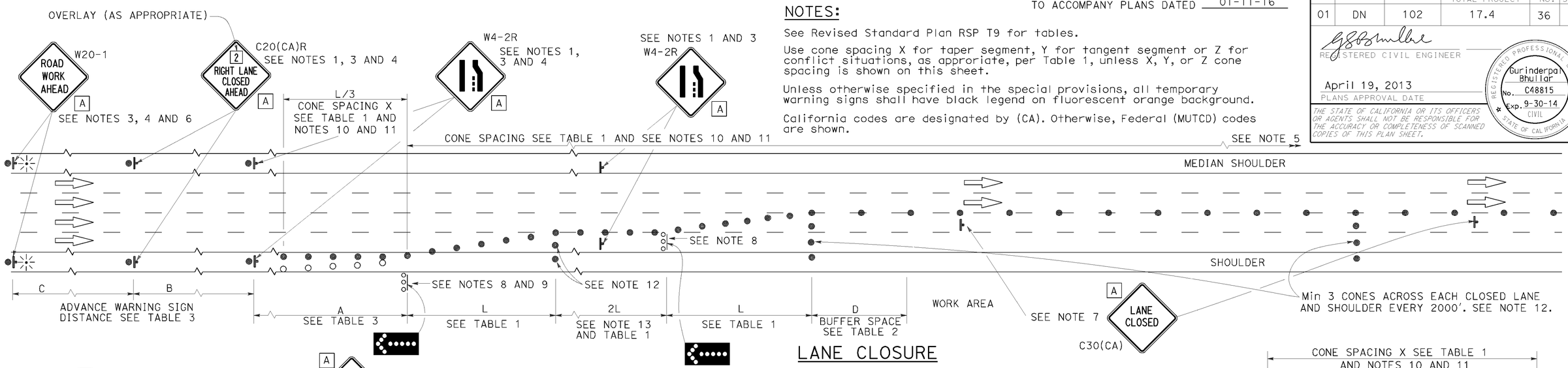


## LANE CLOSURE

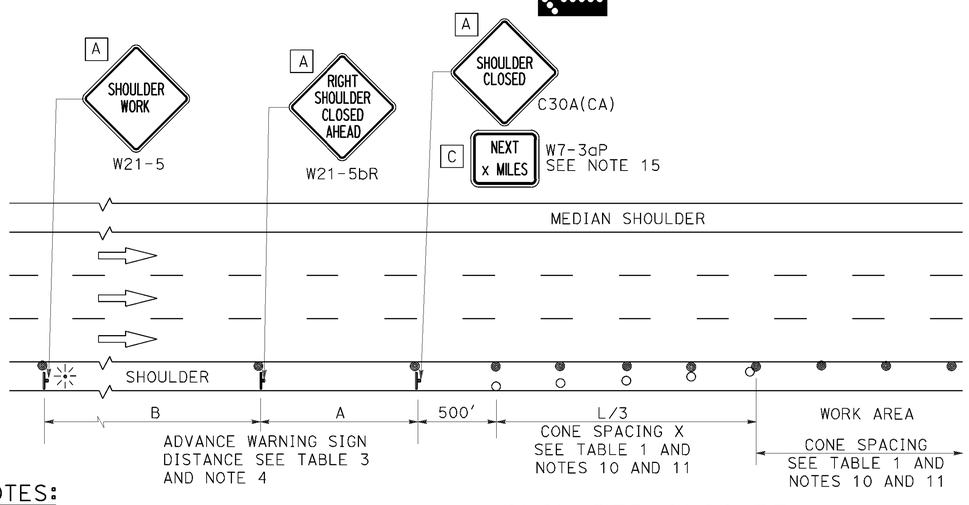


## SHOULDER CLOSURE

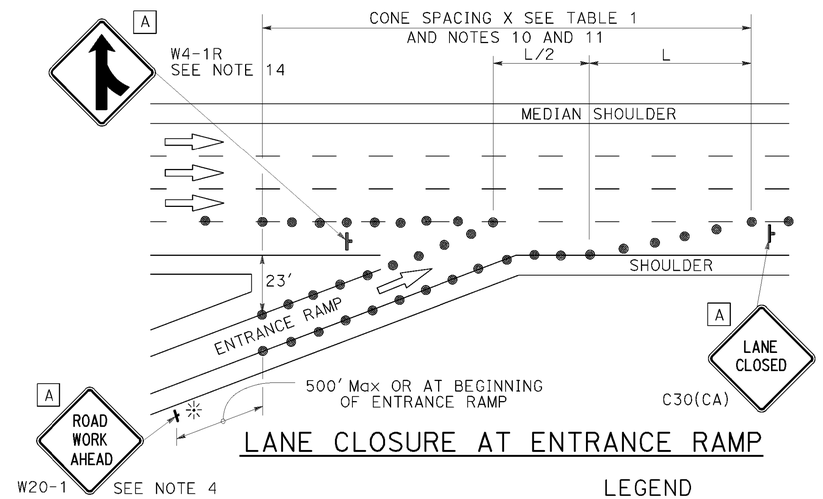


## LANE CLOSURE AT ENTRANCE RAMP

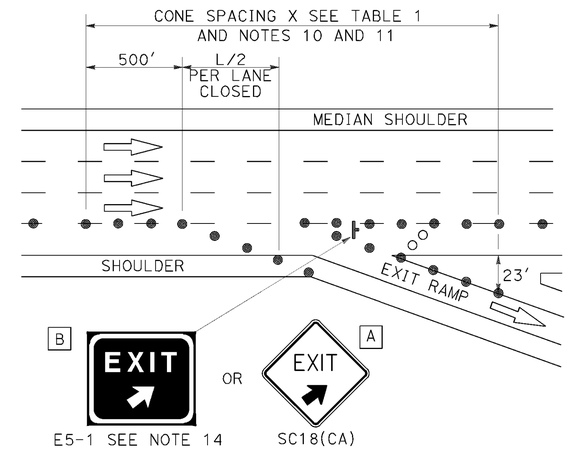


## LANE CLOSURE AT EXIT RAMP

## NOTES:

1. Median lane closures shall conform to the details as shown except that C20(CA)L and W4-2L signs shall be used.
2. At least one person shall be assigned to provide full time maintenance of traffic control devices for lane closures.
3. Duplicate sign installations are not required:
   a) On opposite shoulder if at least one-half of the available lanes remain open to traffic.
   b) In the median if the width of the median shoulder is less than 8' and the outside lanes are to be closed.
4. Each advance warning sign on each side of the roadway shall be equipped with at least two flags for daytime closure. Each flag shall be at least 16" x 16" in size and shall be orange or fluorescent red-orange in color. Flashing beacons shall be placed at the locations indicated for lane closure during hours of darkness.
5. A G20-2 "END ROAD WORK" sign, with minimum size of 48" x 24" as appropriate, shall be placed at the end of the lane closure unless the end of work area is obvious or ends within a larger project's limits.
6. If the W20-1 sign would follow within 2000' of a stationary W20-1 or G20-1 "ROAD WORK NEXT _____ MILES", use a C20(CA) sign for the first advance warning sign.
7. Place a C30(CA) sign every 2000' throughout length of lane closure.
8. One flashing arrow sign for each lane closed. The flashing arrow signs shall be Type I.
9. A minimum 1500' of sight distance shall be provided where possible for vehicles approaching the first flashing arrow sign. Lane closures shall not begin at top of crest vertical curve or on a horizontal curve.
10. All cones used for lane closures during the hours of darkness shall be fitted with retroreflective bands (or sleeves) as specified in the specifications.
11. Portable delineators, placed at one-half the spacing indicated for traffic cones may be used instead of cones for daytime closures only.
12. Unless otherwise specified in the special provisions, a minimum of 3 cones shall be placed transversely across each closed lane and shoulder at each location where a taper across a traffic lane ends and every 2000' as shown on the "Lane Closure" detail. Two Type II barricades may be used instead of the 3 cones. The transverse alignment of the cones or barricades on the closed shoulder may be shifted from the transverse alignment to provide access to the work.
13. Unless otherwise specified in the special provisions, the 2L tangent shown along lane lines shall be used between the L tapers required for each closed traffic lane.
14. Unless otherwise specified in the special provisions, the E5-1 or SC18(CA) and W4-1 signs shall be used as shown.
15. A W7-3aP "NEXT____ MILES" plaque must be used if theshoulder closure extends beyond the distance that can be perceived by road users.

## LEGEND

- TRAFFIC CONE
- TRAFFIC CONE (OPTIONAL TAPER)
- TEMPORARY TRAFFIC CONTROL SIGN
- FLASHING ARROW SIGN (FAS)
- FAS SUPPORT OR TRAILER
- PORTABLE FLASHING BEACON

## SIGN PANEL SIZE (Min)

| | |
|---|---|
| A | 48" x 48" |
| B | 72" x 60" |
| C | 36" x 30" |

STATE OF CALIFORNIA
DEPARTMENT OF TRANSPORTATION

# TRAFFIC CONTROL SYSTEM FOR LANE CLOSURE ON FREEWAYS AND EXPRESSWAYS

NO SCALE

RSP T10 DATED APRIL 19, 2013 SUPERSEDES STANDARD PLAN T10 DATED MAY 20, 2011 - PAGE 237 OF THE STANDARD PLANS BOOK DATED 2010.

**REVISED STANDARD PLAN RSP T10**

**2010 REVISED STANDARD PLAN RSP T10**

DATE PLOTTED => 14-JAN-2016
TIME PLOTTED => 14:27

| Dist | COUNTY | ROUTE | POST MILES TOTAL PROJECT | SHEET No. | TOTAL SHEETS |
|---|---|---|---|---|---|
| 01 | DN | 102 | 17.4 | 37 | 74 |

REGISTERED CIVIL ENGINEER

April 19, 2013
PLANS APPROVAL DATE

REGISTERED PROFESSIONAL ENGINEER Gurinderpal Bhullar No. C48815 Exp. 9-30-14 CIVIL STATE OF CALIFORNIA

THE STATE OF CALIFORNIA OR ITS OFFICERS OR AGENTS SHALL NOT BE RESPONSIBLE FOR THE ACCURACY OR COMPLETENESS OF SCANNED COPIES OF THIS PLAN SHEET.

TO ACCOMPANY PLANS DATED 01-11-16

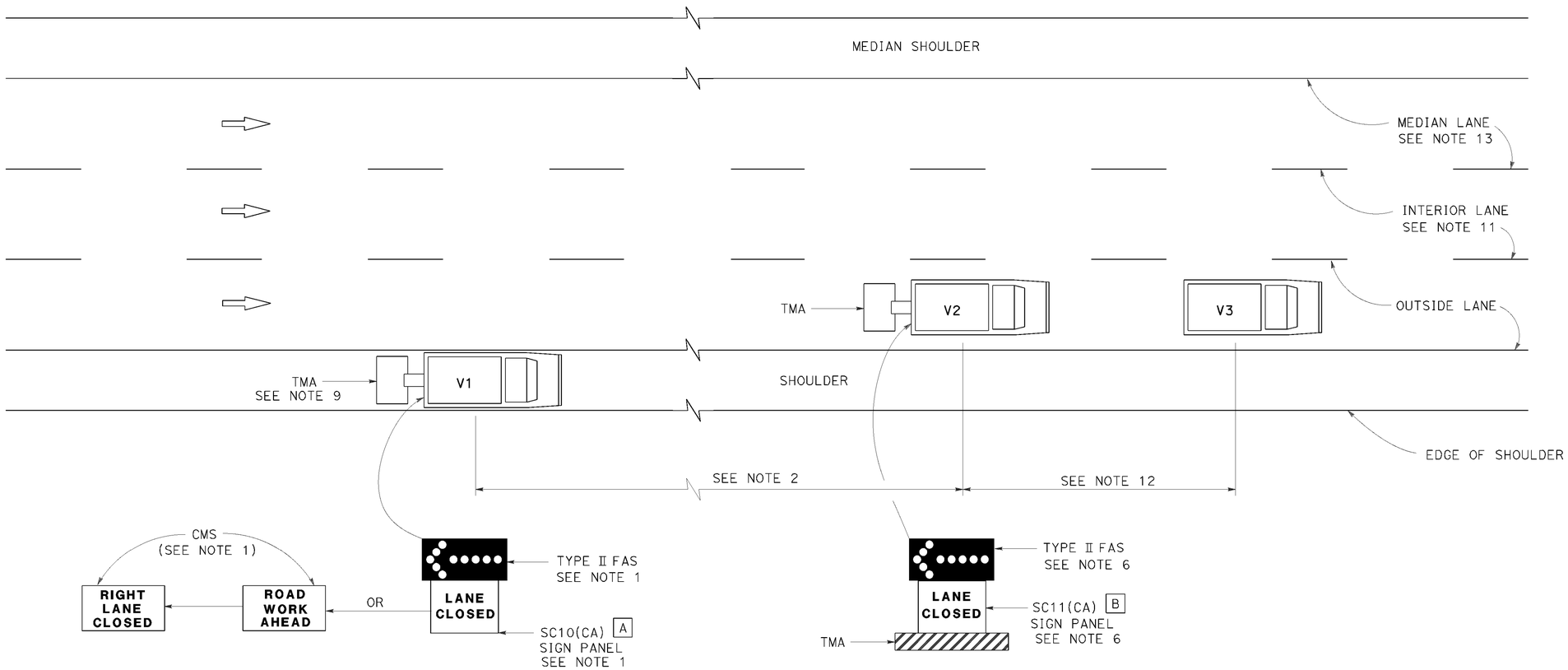


## MOVING LANE CLOSURE ON MEDIAN LANE OR OUTSIDE LANE OF MULTILANE HIGHWAYS

### SIGN PANEL SIZE (Min)

A 66" x 36"

B 54" x 42"

### LEGEND

| | |
|---|---|
| V1 | SIGN VEHICLE |
| V2 | SHADOW VEHICLE |
| V3 | WORK/APPLICATION VEHICLE |
| | FLASHING ARROW SIGN (FAS) |
| CMS | CHANGEABLE MESSAGE SIGN |
| TMA | TRUCK-MOUNTED ATTENUATOR |

### NOTES:

1. Either a changeable message sign or a SC10(CA) sign panel and a Type II flashing arrow sign shall be mounted on the rear of sign vehicle V1. The changeable message sign shall be sequenced to show the "ROAD WORK AHEAD" message first, followed by the "RIGHT LANE CLOSED" message. For median lane closure, the flashing arrow symbol shall be reversed with the arrowhead on the right and the changeable message sign shall show "LEFT LANE CLOSED".
2. If traffic queues develop, sign vehicle V1 should be positioned upstream from the end of queue. Sign vehicle V1 shall be positioned where highly visible when shoulders are not available.
3. A minimum sight distance of 1500′ should be provided in advance of sign vehicle V1.
4. Sign vehicle V1 should remain at the beginning of horizontal or vertical curves until the other vehicles (V2 and V3) are far enough beyond the curve to resume the minimum sight distance of 1500′.
5. Vehicle-mounted sign panels shall have Type III or above retroreflective sheeting, black on white, or black on fluorescent orange, with 6" minimum series D letters per Caltrans sign specifications.
6. Shadow vehicle V2 shall be equipped with a truck-mounted attenuator. The sign panel shown and a Type II flashing arrow sign shall be mounted on the rear of shadow vehicle V2. For median lane closure the flashing arrow sign symbol shall be displayed with the arrowhead on the right.
7. All vehicles used for lane closures shall be equipped with two-way radios, and the vehicle operators shall maintain communication during the work or application operation.
8. All vehicles shall be equipped with flashing or rotating amber lights.
9. If sign vehicle V1 encroaches into the traffic lane due to insufficient shoulder width, sign vehicle V1 shall be equipped with a truck-mounted attenuator. Sign vehicle V1 shall stay as close to the edge of shoulder as practicable.
10. Where workers would be on foot in the work area, a stationary type lane closure (Revised Standard Plan T10, T11, etc., as applicable) shall be used instead of this plan.
11. For moving lane closure on interior lane of multilane highways, use Revised Standard Plan T16.
12. The spacing between work vehicle(s) and the shadow vehicles, and between each shadow vehicle should be minimized to deter road users from driving in between.
13. When the work/application vehicle V3 occupies the median lane, sign vehicle V1 should drive in the median shoulder and indicate left lane closed ahead.

STATE OF CALIFORNIA
DEPARTMENT OF TRANSPORTATION

# TRAFFIC CONTROL SYSTEM FOR MOVING LANE CLOSURE ON MULTILANE HIGHWAYS

NO SCALE

RSP T15 DATED APRIL 19, 2013 SUPERSEDES STANDARD PLAN T15
DATED MAY 20, 2011 - PAGE 243 OF THE STANDARD PLANS BOOK DATED 2010.

**REVISED STANDARD PLAN RSP T15**

**2010 REVISED STANDARD PLAN RSP T15**

DATE PLOTTED => 14-JAN-2016
TIME PLOTTED => 14:28

| Dist | COUNTY | ROUTE | POST MILES TOTAL PROJECT | SHEET No. | TOTAL SHEETS |
|---|---|---|---|---|---|
| 01 | DN | 102 | 17.4 | 38 | 74 |

REGISTERED CIVIL ENGINEER

April 19, 2013
PLANS APPROVAL DATE

REGISTERED PROFESSIONAL ENGINEER Gurinderpal Bhullar No. C48815 Exp. 9-30-14 CIVIL STATE OF CALIFORNIA

THE STATE OF CALIFORNIA OR ITS OFFICERS OR AGENTS SHALL NOT BE RESPONSIBLE FOR THE ACCURACY OR COMPLETENESS OF SCANNED COPIES OF THIS PLAN SHEET.

TO ACCOMPANY PLANS DATED 01-11-16

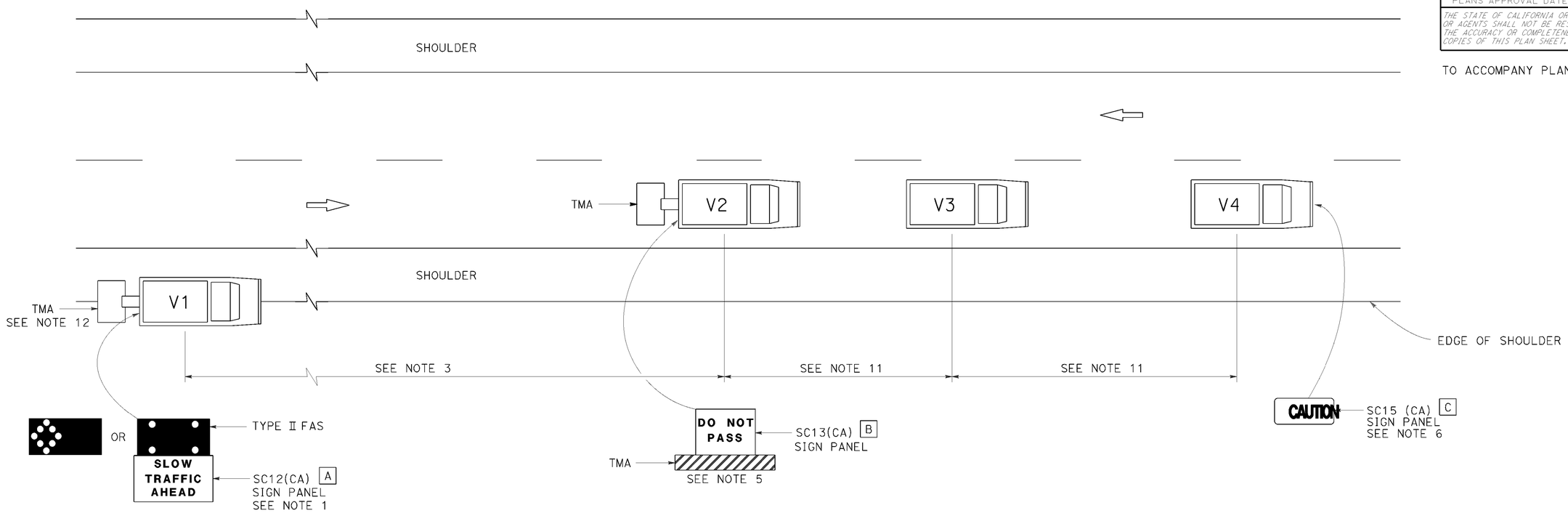


## LEGEND

| | |
|---|---|
| V1 | SIGN VEHICLE |
| V2 | SHADOW VEHICLE |
| V3 | WORK/APPLICATION VEHICLE |
| V4 | SIGN VEHICLE |
| TMA | TRUCK-MOUNTED ATTENUATOR |
| | FLASHING ARROW SIGN (FAS) IN FLASHING CAUTION MODE |
| | FLASHING ARROW SIGN (FAS) IN ALTERNATING DIAMOND CAUTION |

## SIGN PANEL SIZE (Min)

| | |
|---|---|
| A | 72" x 42" |
| B | 54" x 42" |
| C | 54" x 24" |

## NOTES:

1. Either a changeable message sign or a SC12(CA) "SLOW TRAFFIC AHEAD" sign shall be mounted on the rear of sign vehicle V1. The changeable message sign shall be sequenced to show the "CAUTION" message first, follow by the "SLOW TRAFFIC AHEAD" message. A Type II flashing arrow sign may be used with the SC12(CA) sign panel.
2. Sign vehicle V1 should be positioned where highly visible when shoulders are not available.
3. If traffic queues develop, sign vehicle V1 should be positioned upstream from the end of queue.
4. Vehicle-mounted sign panels shall have Type III or above retroreflective sheeting, black on white, or black on fluorescent orange, with 6" minimum series D letters per Caltrans sign specifications.
5. Shadow vehicle shall be equipped with a truck-mounted attenuator. The sign panel shown shall be mounted on the rear of shadow vehicle V2. The message "LANE CLOSED" may be used in place of the "DO NOT PASS" message.
6. The sign panel shown shall be mounted on the front of sign vehicle V4, facing opposing traffic.
7. All vehicles shall be equipped with flashing or rotating amber lights.
8. Sign vehicle V4 will not be required when the work and vehicles V2 and V3 are 2' or more from the centerline of the highway during the work or application operations.
9. All vehicles used for lane closures shall be equipped with two-way radios and the vehicle operators shall maintain communication during the work or application operation.
10. This plan shall not be used where workers would be on foot in the work area. Use a stationary type lane closure (Revised Standard Plan T13) for this condition.
11. Minimize spacing between vehicles V2 and V3 and vehicles V3 and V4 to deter road users from driving in between them.
12. If sign vehicle V1 encroaches into the traffic lane due to insufficient shoulder width, sign vehicle V1 shall be equipped with a truck-mounted attenuator. Sign vehicle V1 shall stay as close to the edge of shoulder as practicable.

STATE OF CALIFORNIA
DEPARTMENT OF TRANSPORTATION

# TRAFFIC CONTROL SYSTEM FOR MOVING LANE CLOSURE ON TWO LANE HIGHWAYS

NO SCALE

RSP T17 DATED APRIL 19, 2013 SUPERSEDES STANDARD PLAN T17
DATED MAY 20, 2011 - PAGE 245 OF THE STANDARD PLANS BOOK DATED 2010.

**REVISED STANDARD PLAN RSP T17**

**2010 REVISED STANDARD PLAN RSP T17**

DATE PLOTTED => 14-JAN-2016
TIME PLOTTED => 14:28

| Dist | COUNTY | ROUTE | POST MILES TOTAL PROJECT | SHEET No. | TOTAL SHEETS |
|---|---|---|---|---|---|
| 01 | DN | 102 | 17.4 | 39 | 74 |

REGISTERED CIVIL ENGINEER

April 20, 2012
PLANS APPROVAL DATE

REGISTERED PROFESSIONAL ENGINEER
Tillat Satter
No. C42892
Exp. 3-31-14
CIVIL
STATE OF CALIFORNIA

*THE STATE OF CALIFORNIA OR ITS OFFICERS OR AGENTS SHALL NOT BE RESPONSIBLE FOR THE ACCURACY OR COMPLETENESS OF SCANNED COPIES OF THIS PLAN SHEET.*

TO ACCOMPANY PLANS DATED 01-11-16

**2010 REVISED STANDARD PLAN RSP B11-68**

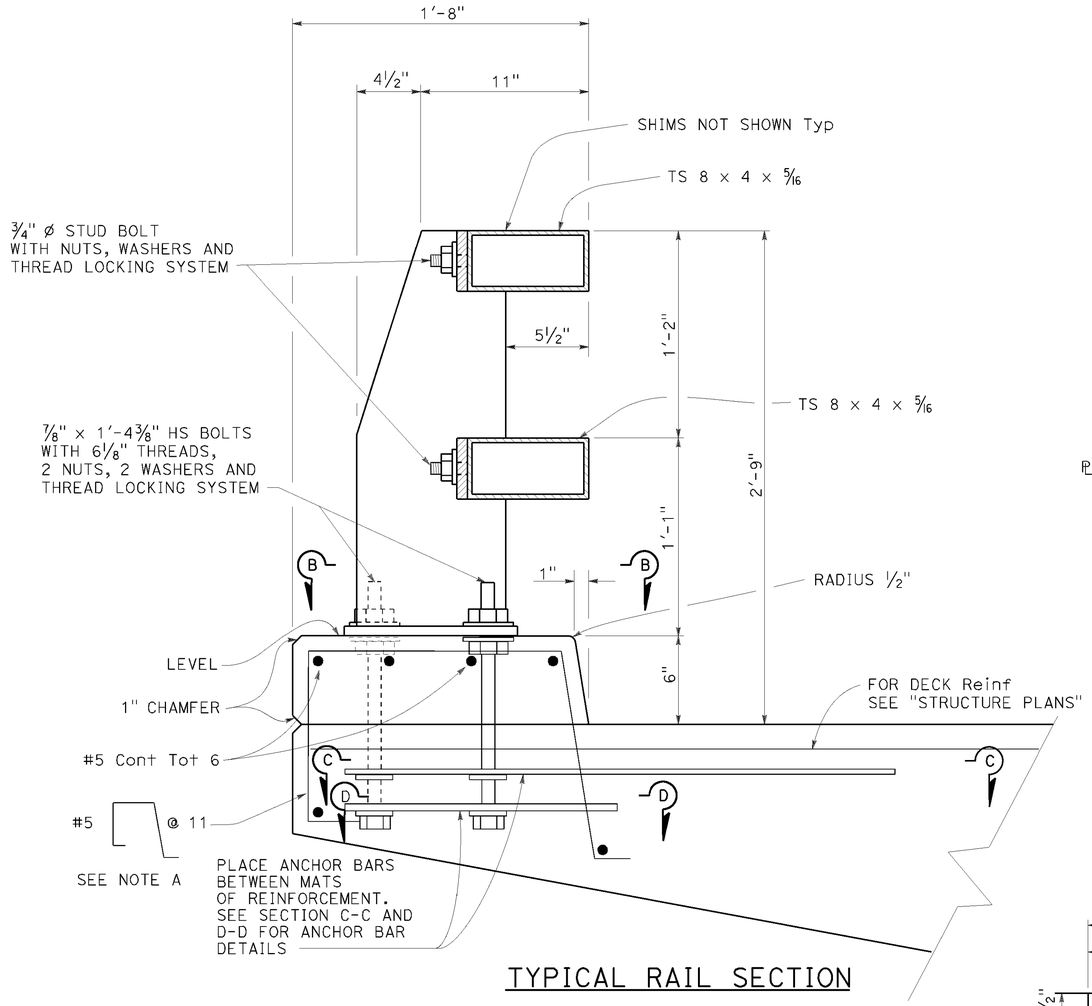


TYPICAL RAIL SECTION

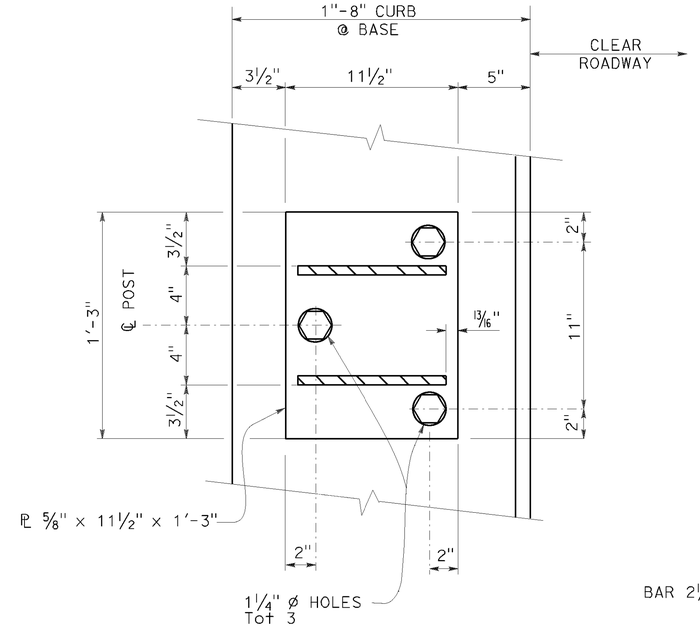


SECTION B-B

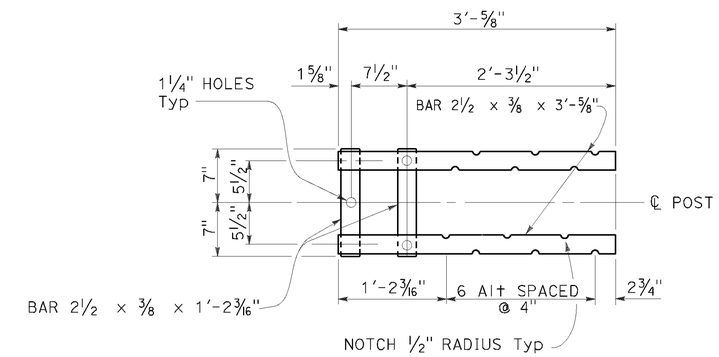


SECTION C-C
Top Anchorage

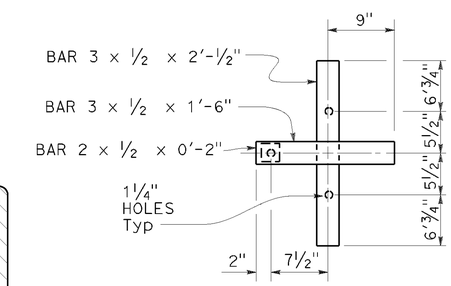


SECTION D-D
Lower Anchorage

NOTE A

Adjust spacing to clear scupper opening by 2" if applicable.

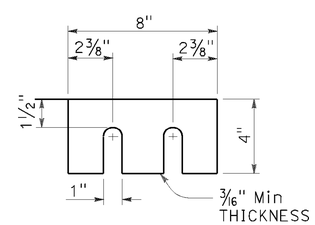


SHIMS REQUIRED FOR
TOP AND BOTTOM RAIL

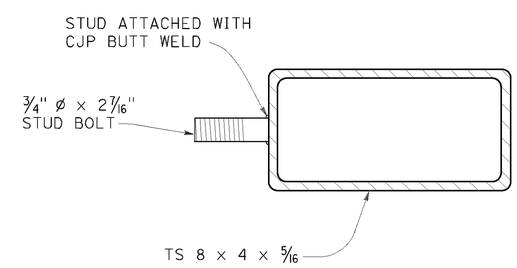


SECTION AT POST

STUD BOLT DETAIL

STATE OF CALIFORNIA
DEPARTMENT OF TRANSPORTATION

# CALIFORNIA ST-10 BRIDGE RAIL (SHEET 1 OF 3)

NO SCALE

RSP B11-68 DATED APRIL 20, 2012 SUPERSEDES STANDARD PLAN B11-68
DATED MAY 20, 2011 - PAGE 308 OF THE STANDARD PLANS BOOK DATED 2010.

**REVISED STANDARD PLAN RSP B11-68**

DATE PLOTTED => 14-JAN-2016
TIME PLOTTED => 14:28

| Dist | COUNTY | ROUTE | POST MILES TOTAL PROJECT | SHEET No. | TOTAL SHEETS |
|---|---|---|---|---|---|
| 01 | DN | 102 | 17.4 | 40 | 74 |

REGISTERED CIVIL ENGINEER

July 19, 2013
PLANS APPROVAL DATE

REGISTERED PROFESSIONAL ENGINEER
Tillat Satter
No. C42892
Exp. 3-31-14
CIVIL
STATE OF CALIFORNIA

*THE STATE OF CALIFORNIA OR ITS OFFICERS OR AGENTS SHALL NOT BE RESPONSIBLE FOR THE ACCURACY OR COMPLETENESS OF SCANNED COPIES OF THIS PLAN SHEET.*

TO ACCOMPANY PLANS DATED 01-11-16

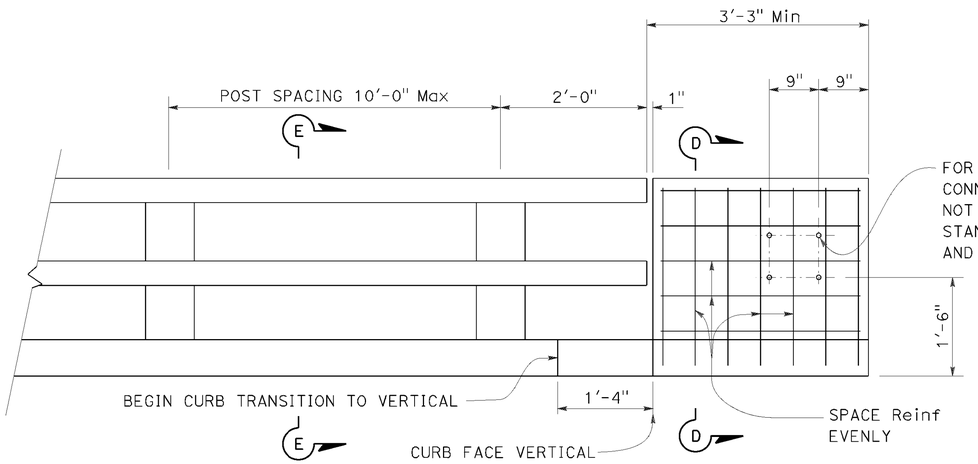


## END OF RAILING ELEVATION

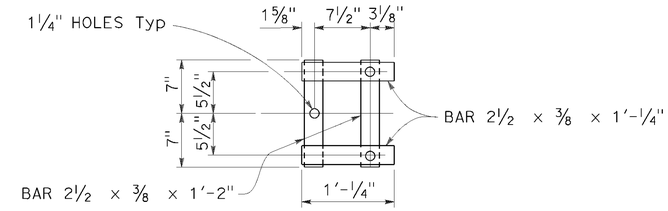


## WALL ANCHOR PLATE DETAIL

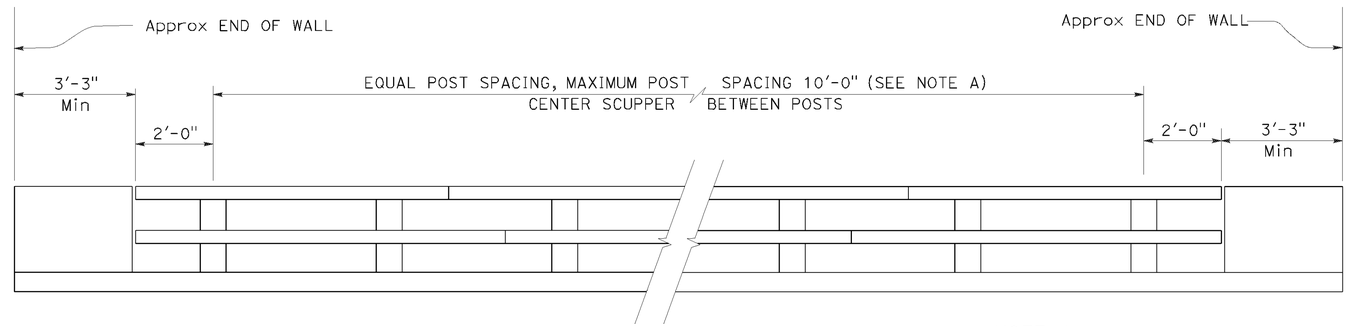


## BRIDGE RAILING ELEVATION

**NOTE A:**

Post spacing and/or block length to be adjusted to fit bridge length or wingwall length.

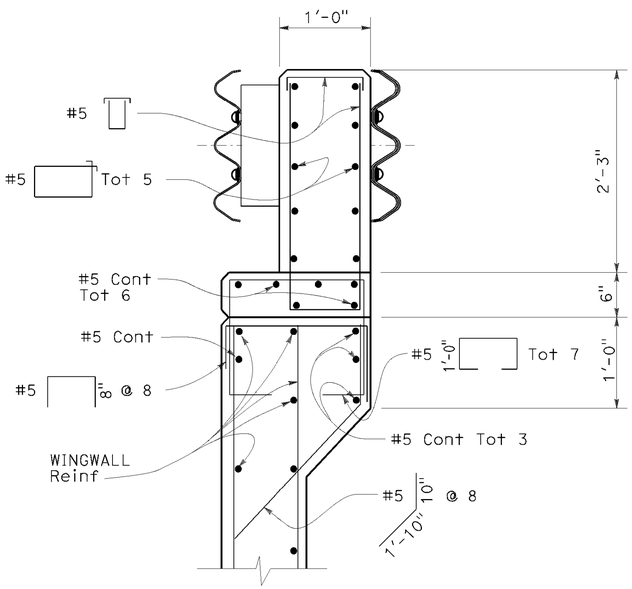


## SECTION D-D

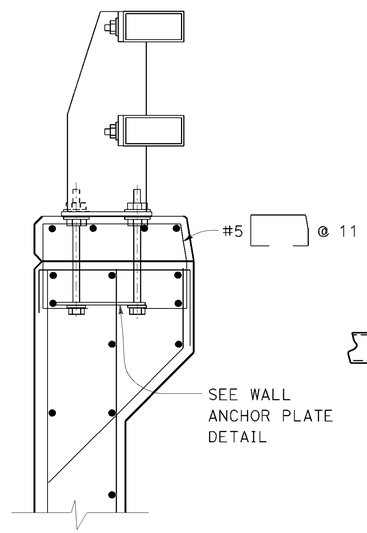


## SECTION E-E

Reinf same as for Section D-D except as noted.

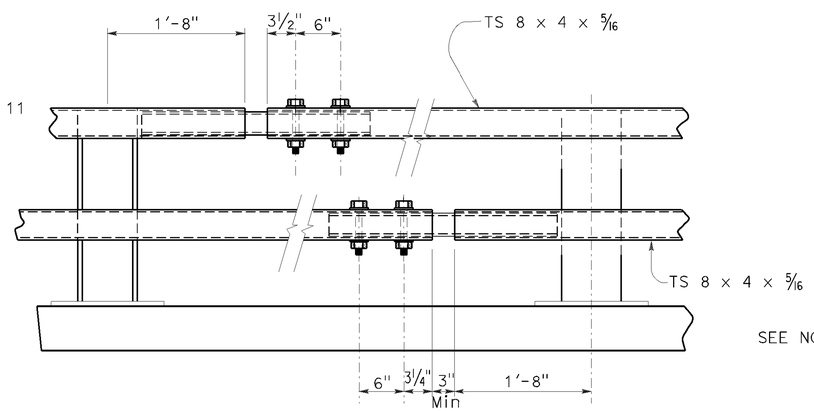


## EXPANSION SPLICE

**NOTE B:**

Use ¾" ⌀ × 5⅝"
Hs bolts with washers, fully tensioned.
1" holes in rail Typ

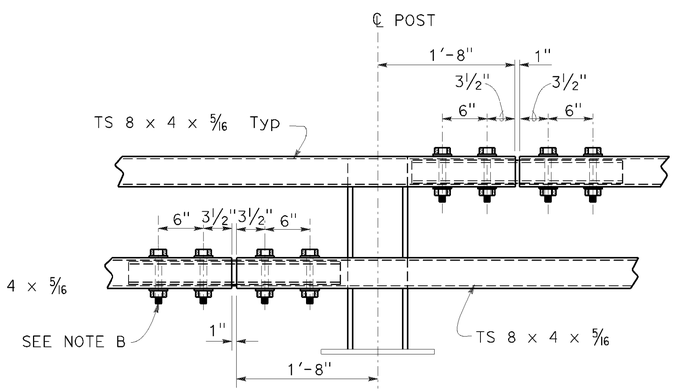


## STANDARD SPLICE

STATE OF CALIFORNIA
DEPARTMENT OF TRANSPORTATION

# CALIFORNIA ST-10 BRIDGE RAIL (SHEET 3 OF 3)

NO SCALE

RSP B11-70 DATED JULY 19, 2013 SUPERSEDES STANDARD PLAN B11-70 DATED MAY 20, 2011 - PAGE 310 OF THE STANDARD PLANS BOOK DATED 2010.

**REVISED STANDARD PLAN RSP B11-70**

**2010 REVISED STANDARD PLAN RSP B11-70**

DATE PLOTTED => 14-JAN-2016
TIME PLOTTED => 14:28

| Dist | COUNTY | ROUTE | POST MILES TOTAL PROJECT | SHEET No. | TOTAL SHEETS |
|---|---|---|---|---|---|
| 01 | DN | 102 | 17.4 | 41 | 74 |

Theresa Gabriel
REGISTERED ELECTRICAL ENGINEER

October 30, 2015
PLANS APPROVAL DATE

REGISTERED PROFESSIONAL ENGINEER
Theresa Aziz Gabriel
No. E15129
Exp. 6-30-16
ELECTRICAL
STATE OF CALIFORNIA

*THE STATE OF CALIFORNIA OR ITS OFFICERS OR AGENTS SHALL NOT BE RESPONSIBLE FOR THE ACCURACY OR COMPLETENESS OF SCANNED COPIES OF THIS PLAN SHEET.*

TO ACCOMPANY PLANS DATED 01-11-16

## LEGEND:

| | |
|---|---|
| AB | ABANDON. IF APPLIED TO CONDUIT, REMOVE CONDUCTORS |
| BC | INSTALL PULL BOX IN EXISTING CONDUIT RUN |
| BP | PEDESTRIAN BARRICADE, TYPE AS INDICATED ON PLAN |
| CB | INSTALL CONDUIT INTO EXISTING PULL BOX |
| CC | CONNECT NEW AND EXISTING CONDUIT. REMOVE EXISTING CONDUCTORS AND INSTALL CONDUCTORS AS INDICATED |
| CF | CONDUIT TO REMAIN FOR FUTURE USE. REMOVE CONDUCTORS. INSTALL PULL TAPE |
| DH | DETECTOR HANDHOLE |
| FA | FOUNDATION TO BE ABANDONED |
| IS | INSTALL SIGN ON SIGNAL MAST ARM |
| NS | NO SLIP BASE ON STANDARD |
| PEC | PHOTOELECTRIC CONTROL |
| PEU | PHOTOELECTRIC UNIT |
| RC | EQUIPMENT OR MATERIAL TO BE REMOVED AND BECOME THE PROPERTY OF THE CONTRACTOR |
| RE | REMOVE ELECTROLIER, FUSES AND BALLAST. TAPE ENDS OF CONDUCTORS |
| RL | RELOCATE EQUIPMENT |
| RR | REMOVE AND REUSE EQUIPMENT |
| RS | REMOVE AND SALVAGE EQUIPMENT |
| SC | SPLICE NEW TO EXISTING CONDUCTORS |
| SD | SERVICE DISCONNECT |
| TSP | TELEPHONE SERVICE POINT |

## ABBREVIATIONS

| | |
|---|---|
| AC+ | UNDERGROUNDED CONDUCTOR |
| APS | ACCESSIBLE PEDESTRIAN SIGNAL |
| Batt | BATTERY |
| BBS | BATTERY BACKUP SYSTEM |
| BC | BOLT CIRCLE |
| Blk | BLACK |
| BP | BYPASS |
| BPB | BICYCLE PUSH BUTTON |
| C | CONDUIT |
| CB | CIRCUIT BREAKER |
| CCTV | CLOSED CIRCUIT TELEVISION |
| Ckt | CIRCUIT |
| CMS | CHANGEABLE MESSAGE SIGN |
| Ctid | CALTRANS IDENTIFICATION |
| Comm | COMMUNICATION |
| Cntl | CONTROL |
| DF | DEPARTMENT-FURNISHED |
| DLC | LOOP DETECTOR LEAD-IN CABLE |
| EMS | EXTINGUISHABLE MESSAGE SIGN |
| EVUC | EMERGENCY VEHICLE UNIT CABLE |
| EVUD | EMERGENCY VEHICLE UNIT DETECTOR |
| FB | FLASHING BEACON |
| FBCA | FLASHING BEACON CONTROL ASSEMBLY |
| FBS | FLASHING BEACON WITH SLIP BASE |
| FO | FIBER OPTIC |
| G | EQUIPMENT GROUNDING CONDUCTOR |
| GB | GROUND BUS |
| GFCI | GROUND FAULT CIRCUIT INTERRUPTER |
| Grn | GREEN |
| HAR | HIGHWAY ADVISORY RADIO |
| Hex | HEXAGONAL |
| HPS | HIGH PRESSURE SODIUM |
| IISNS | INTERNALLY ILLUMINATED STREET NAME SIGN |
| ISL | INDUCTION SIGN LIGHTING |
| LED | LIGHT EMITTING DIODE |
| LMA | LUMINAIRE MAST ARM |
| LPS | LOW PRESSURE SODIUM |
| Ltg | LIGHTING |
| Lum | LUMINAIRE |
| M | METERED |
| MAT | MAST ARM MOUNTING TOP ATTACHMENT |
| MAS | MAST ARM MOUNTING SIDE ATTACHMENT |
| MBPS | MANUAL BYPASS SWITCH |
| M/M | MULTIPLE TO MULTIPLE TRANSFORMER |
| Mtg | MOUNTING |
| MV | MERCURY VAPOR LIGHTING FIXTURE |
| MVDS | MICROWAVE VEHICLE DETECTION SYSTEM |
| N | NEUTRAL (GROUNDED CONDUCTOR) |
| NB | NEUTRAL BUS |
| NC | NORMALLY CLOSE |
| NO | NORMALLY OPEN |
| P | CIRCUIT BREAKER'S POLE |
| PB | PULL BOX |
| PBA | PUSH BUTTON ASSEMBLY |
| PEC | PHOTOELECTRIC CONTROL |
| Ped | PEDESTRIAN |
| PEU | PHOTOELECTRIC UNIT |
| PT | CONDUIT WITH PULL TAPE |
| PTR | POWER TRANSFER RELAY |
| RE | RELOCATED EQUIPMENT |
| RM | RAMP METERING |
| RWIS | ROADSIDE WEATHER INFORMATION SYSTEM |
| SB | SLIP BASE |
| SIC | SIGNAL INTERCONNECT CABLE |
| Sig | SIGNAL |
| SMA | SIGNAL MAST ARM |
| SNS | STREET NAME SIGN |
| SP | SERVICE POINT |
| TB | TERMINAL BOARD |
| TDC | TELEPHONE DEMARCATION CABINET |
| Temp | TEMPERATURE |
| TMS | TRAFFIC MONITORING STATION |
| TOS | TRAFFIC OPERATIONS SYSTEM |
| UPS | UNINTERRUPTABLE POWER SUPPLY |
| UPSC | UNINTERRUPTABLE POWER SUPPLY CONTROLLER |
| Veh | VEHICLE |
| VIVDS | VIDEO IMAGE VEHICLE DETECTION SYSTEM |
| Wht | WHITE |
| WIM | WEIGH-IN-MOTION |
| Xfmr | TRANSFORMER |

## SOFFIT AND WALL-MOUNTED LUMINAIRES

- PENDANT SOFFIT LUMINAIRE, 70 W HPS UNLESS OTHERWISE SPECIFIED
- FLUSH-MOUNTED SOFFIT LUMINAIRE, 70 W HPS UNLESS OTHERWISE SPECIFIED
- WALL-MOUNTED LUMINAIRE, 70 W HPS UNLESS OTHERWISE SPECIFIED
- EXISTING SOFFIT OR WALL-MOUNTED LUMINAIRE TO REMAIN UNMODIFIED
- EXISTING SOFFIT OR WALL-MOUNTED LUMINAIRE TO BE MODIFIED AS SPECIFIED

**NOTE:**
Arrow indicates "street side" of luminaire.

COMMONLY USED SYMBOLS FOR UNITED STATES CUSTOMARY UNITS OF MEASUREMENT:

| SYMBOL | DEFINITIONS |
|---|---|
| Ω | OHMS |
| min | MINUTE |
| s | SECOND |
| bps | BITS PER SECOND |
| Bps | BYTES PER SECOND |
| A | AMPERE |
| V | VOLT |
| V(dc) | VOLT (DIRECT CURRENT) |
| V(ac) | VOLT (ALTERNATING CURRENT) |
| FC | FOOT - CANDLE |
| W | WATTS |
| VA | VOLT-AMPERE |
| M | MEGA |
| k | KILO |
| m | MILLI |
| μ | MICRO |
| P | PICO |
| Hz | HERTZ |

## MISCELLANEOUS ELECTROLIERS

| NEW | EXISTING | |
|---|---|---|
| | | LUMINAIRE ON WOOD POLE |
| | | NON-STANDARD ELECTROLIER (SEE PROJECT LEGEND) |
| | | CITY ELECTROLIER |
| | | ELECTROLIER FOUNDATION (FUTURE INSTALLATION) |

**NOTES:**

1. LED luminaires shall be 235 W when installed on Type 21, 21D, 30, 31 and 32 Standards, unless otherwise specified. LED luminaires shall be 165 W when installed on other type standards or poles, unless otherwise specified.
2. Luminaires shall be the cutoff type, ANSI Type Ⅲ medium cutoff lighting distribution, unless otherwise specified.

## STANDARD ELECTROLIER

| NEW | EXISTING | STANDARD TYPE |
|---|---|---|
| | | 15 |
| | | 15D |
| | | 15 STRUCTURE |
| | | 15D STRUCTURE |
| | | 21 |
| | | 21D |
| | | 21 STRUCTURE |
| | | 21D STRUCTURE |
| | | 30 |
| | | 31 |
| | | 32 |

STATE OF CALIFORNIA
DEPARTMENT OF TRANSPORTATION

# ELECTRICAL SYSTEMS (LEGEND AND ABBREVIATIONS)

NO SCALE

RSP ES-1A DATED OCTOBER 30, 2015 SUPERSEDES RSP ES-1A DATED JULY 19, 2013 AND STANDARD PLAN ES-1A DATED MAY 20, 2011 - PAGE 425 OF THE STANDARD PLANS BOOK DATED 2010.

**REVISED STANDARD PLAN RSP ES-1A**

**2010 REVISED STANDARD PLAN RSP ES-1A**

DATE PLOTTED => 14-JAN-2016
TIME PLOTTED => 14:28

| Dist | COUNTY | ROUTE | POST MILES TOTAL PROJECT | SHEET No. | TOTAL SHEETS |
|---|---|---|---|---|---|
| 01 | DN | 102 | 17.4 | 42 | 74 |

Theresa Gabriel
REGISTERED ELECTRICAL ENGINEER

October 30, 2015
PLANS APPROVAL DATE

REGISTERED PROFESSIONAL ENGINEER Theresa Aziz Gabriel No. E15129 Exp. 6-30-16 ELECTRICAL STATE OF CALIFORNIA

*THE STATE OF CALIFORNIA OR ITS OFFICERS OR AGENTS SHALL NOT BE RESPONSIBLE FOR THE ACCURACY OR COMPLETENESS OF SCANNED COPIES OF THIS PLAN SHEET.*

TO ACCOMPANY PLANS DATED 01-11-16

## CONDUIT

| NEW | EXISTING | |
|---|---|---|
| | | LIGHTING CONDUIT, UNLESS OTHERWISE INDICATED OR NOTED |
| | | TRAFFIC SIGNAL CONDUIT |
| C | c | COMMUNICATION CONDUIT |
| T | t | TELEPHONE CONDUIT |
| F | f | FIRE ALARM CONDUIT |
| FO | fo | FIBER OPTIC CONDUIT |
| | | CONDUIT TERMINATION |
| R | r | CONDUIT RISER ATTACHED TO THE STRUCTURE OR SERVICE POLE |

## SERVICE EQUIPMENT

| NEW | EXISTING | |
|---|---|---|
| OH | oh | OVERHEAD LINES |
| U | U | WOOD POLE, "U" INDICATES UTILITY OWNED |
| | | POLE GUY WITH ANCHOR |
| | | UTILITY TRANSFORMER - GROUND MOUNTED |
| III | III | SERVICE EQUIPMENT ENCLOSURE TYPE. DOOR INDICATES FRONT OF ENCLOSURE |
| T | t | TELEPHONE DEMARCATION CABINET |

## POLE-MOUNTED SERVICE DESIGNATION

TYPE H SERVICE, 28'-10" — TYPE OF INSTALLATION AND POLE HEIGHT ABOVE GRADE

## FLASHING BEACON

| NEW | EXISTING | |
|---|---|---|
| R | R | FLASHING BEACON (ONE VEHICLE SIGNAL HEAD WITH BACKPLATE AND VISOR) "R" INDICATES RED INDICATION, "Y" INDICATES YELLOW INDICATION |
| Y Y | Y Y | FLASHING BEACON WITH TYPE 15-FBS STANDARD AND A SIGN. |
| R R | R R | FLASHING BEACON WITH TYPES 9, 9A OR 9B SIGN UNLESS OTHERWISE SPECIFIED OR INDICATED |

## SIGNAL EQUIPMENT

| NEW | EXISTING | |
|---|---|---|
| | | PEDESTRIAN SIGNAL HEAD |
| | | PUSH BUTTON ASSEMBLY POST |
| | | PEDESTRIAN BARRICADE |
| | | VEHICLE SIGNAL HEAD (WITH BACKPLATE AND 3-SECTIONS: RED, YELLOW AND GREEN) |
| | | VEHICLE SIGNAL HEAD WITH ANGLE VISOR |
| PV | PV | MODIFICATIONS OF BASIC SYMBOL: "L" INDICATES ALL NON-ARROW SECTIONS LOUVERED "LG" INDICATES LOUVERED GREEN SECTION ONLY "PV" INDICATES ALL 12" SECTIONS PROGRAMMED VISIBILITY "8" INDICATES ALL 8" SECTIONS (ONLY WHEN SPECIFIED) |
| | | VEHICLE SIGNAL HEAD CONSISTING OF RED, YELLOW AND GREEN LEFT ARROW SECTIONS |
| | | VEHICLE SIGNAL HEAD CONSISTING OF RED AND YELLOW SECTIONS WITH AN UP GREEN ARROW SECTION |
| | | VEHICLE SIGNAL HEAD (5 SECTION) CONSISTING OF RED, YELLOW AND GREEN SECTIONS WITH YELLOW AND GREEN RIGHT ARROW SECTIONS |
| | | TYPE 15TS STANDARD WITH VEHICLE SIGNAL HEAD AND LUMINAIRE |
| | | TYPE 21TS STANDARD WITH VEHICLE SIGNAL HEAD AND LUMINAIRE |
| | | STANDARD WITH LUMINAIRE AND SIGNAL MAST ARMS AND ATTACHED VEHICLE SIGNAL HEADS |
| | | TYPE 1 STANDARD WITH ATTACHED VEHICLE SIGNAL HEADS |
| | | STANDARD WITH A SIGNAL MAST ARM, ATTACHED VEHICLE SIGNAL HEADS AND INTERNALLY ILLUMINATED STREET NAME SIGN |
| | | CONTROLLER ASSEMBLY. DOOR INDICATES FRONT OF CABINET |

## SIGNAL EQUIPMENT Cont

| NEW | EXISTING | |
|---|---|---|
| | | GUARD POST |
| | | TYPE 1 STANDARD WITH RAMP METERING SIGN |
| | | OPTICAL DETECTOR FOR THE EMERGENCY VEHICLE DETECTION |

### NOTES:

1. All signal sections shall be 12" unless shown otherwise.
2. Signal heads shall be provided with backplates unless shown otherwise.

## ILLUMINATED OVERHEAD SIGN

| NEW | EXISTING | |
|---|---|---|
| | | SINGLE POST, SINGLE ILLUMINATED SIGN, BALANCED BUTTERFLY |
| | | SINGLE POST, DOUBLE ILLUMINATED SIGN, BALANCED BUTTERFLY |
| | | SINGLE POST, SINGLE ILLUMINATED SIGN, FULL CANTILEVER |
| | | DOUBLE POST, SINGLE ILLUMINATED SIGN |
| | | SINGLE ILLUMINATED SIGN MOUNTED ON STRUCTURE |
| | | DOUBLE POST, SINGLE ILLUMINATED SIGN WITH ELECTROLIER |

STATE OF CALIFORNIA
DEPARTMENT OF TRANSPORTATION

# ELECTRICAL SYSTEMS (LEGEND AND ABBREVIATIONS)

NO SCALE

RSP ES-1B DATED OCTOBER 30, 2015 SUPERSEDES RSP ES-1B DATED JULY 19, 2013 AND STANDARD PLAN ES-1B DATED MAY 20, 2011 - PAGE 426 OF THE STANDARD PLANS BOOK DATED 2010.

**REVISED STANDARD PLAN RSP ES-1B**

**2010 REVISED STANDARD PLAN RSP ES-1B**

DATE PLOTTED => 14-JAN-2016
TIME PLOTTED => 14:29

| Dist | COUNTY | ROUTE | POST MILES TOTAL PROJECT | SHEET No. | TOTAL SHEETS |
|---|---|---|---|---|---|
| 01 | DN | 102 | 17.4 | 43 | 74 |

Theresa Gabriel
REGISTERED ELECTRICAL ENGINEER

October 30, 2015
PLANS APPROVAL DATE

REGISTERED PROFESSIONAL ENGINEER Theresa Aziz Gabriel No. E15129 Exp. 6-30-16 ELECTRICAL STATE OF CALIFORNIA

*THE STATE OF CALIFORNIA OR ITS OFFICERS OR AGENTS SHALL NOT BE RESPONSIBLE FOR THE ACCURACY OR COMPLETENESS OF SCANNED COPIES OF THIS PLAN SHEET.*

TO ACCOMPANY PLANS DATED 01-11-16

# EQUIPMENT IDENTIFICATION

## ILLUMINATED SIGN IDENTIFICATION NUMBER:

SIGN No. 12345
10 ISL SCI 1.0

- SIGN NUMBER - PLACE ON POST OR STRUCTURE
- TRANSFORMER RATING (kVA)
- LIGHTING CONTROL TYPE
- NUMBER AND TYPE OF FIXTURES

DO NOT PLACE ON STANDARD OR STRUCTURE

## ELECTROLIER OR EQUIPMENT IDENTIFICATION NUMBER:

12345 - 15'-0"

- MAST ARM LENGTH, IF SHOWN. DO NOT PLACE ON STANDARD OR STRUCTURE
- EQUIPMENT NUMBER - PLACE ON STANDARD OR STRUCTURE. EXISTING EQUIPMENT NUMBERS ARE SHOWN IN PARENTHESIS

## CONDUIT AND CONDUCTOR IDENTIFICATION:

1½"C, 2#10, 15#14, 2 DLC, 12P#18 (PAIR)

- NUMBER AND SIZE OF CONDUCTORS AND CABLES
- SIZE OF CONDUIT IN INCHES

| | |
|---|---|
| Ø1, Ø2, Ø2P, etc. | TRAFFIC PHASE IDENTIFICATION FOR SIGNALS, DETECTORS AND PHASE DIAGRAMS |
| 1 2 3 | LEGEND NUMBERS |
| A B C | EQUIPMENT, SIGNAL POLES, INSTALLATION OR ITEMS |
| 1 2 3 | CONDUIT RUN NUMBERS |

## SIGNAL AND LIGHTING STANDARD (TYPICAL DESIGNATION):

19A - 3 - 100

- WIND VELOCITY = 100 mph
- CASE 3 ARM LOADING
- STANDARD TYPE
- STANDARD PLAN SHEET NUMBER
- DETAIL, NUMBER, SECTION, TYPE OR ELEVATION

# MISCELLANEOUS EQUIPMENT

| NEW | EXISTING | |
|---|---|---|
| CMS | cms | CHANGEABLE MESSAGE SIGN |
| | | CLOSED CIRCUIT TELEVISION CAMERA |
| | | HIGHWAY ADVISORY RADIO POLE AND ANTENNA |
| EMS | ems | LED EXTINGUISHABLE MESSAGE SIGN |
| M V | m v | DETECTION DEVICE<br>M = MICROWAVE SENSOR<br>V = VIDEO IMAGE SENSOR |

# WIRING DIAGRAM LEGEND

- EXTERNAL CONDUCTOR
- CONDUCTOR OR BUS
- TIE POINT
- CONTACTOR COIL
- CONTACTOR, NO CONTACT
- TERMINAL BLOCKS
- CONTACTOR, NC CONTACT
- ENCLOSURE BOND
- GROUNDING ELECTRODE
- CIRCUIT BREAKER
- RECEPTACLE

# PULL BOXES

| NEW | EXISTING | |
|---|---|---|
| | | PULL BOX, No. 5 UNLESS OTHERWISE INDICATED OR NOTED |
| 3 | 9A(21) | PULL BOX, ADDITIONAL DESIGNATIONS OR DESCRIPTIONS |

3 No. 3½ PULL BOX
5 No. 5 PULL BOX
6 No. 6 PULL BOX
7 No. 7 (CEILING PULL BOX)
8 No. 8 (PENDANT SOFFIT PULL BOX)
9 No. 9 PULL BOX
9A No. 9A PULL BOX

(C) COMMUNICATIONS PULL BOX
(E) PULL BOX WITH EXTENSION
(S) SPRINKLER CONTROL PULL BOX
(21) ANCHOR BOLTS AND CONDUIT FOR FUTURE INSTALLATION OF TYPE 21 STANDARD
(T) TRAFFIC PULL BOX

# VEHICLE DETECTORS

5 J 9 U

- VEHICLE DETECTOR DESIGNATION
- U = UPPER
  L = LOWER
- SLOT NUMBER IN INPUT FILE
- INPUT FILE (I OR J)
- PHASE

| NEW | EXISTING | |
|---|---|---|
| | | TYPE A LOOP DETECTOR. OUTLINE OF SAWCUT SHOWN |
| | | TYPE B LOOP DETECTOR. OUTLINE OF SAWCUT SHOWN |
| | | TYPE C LOOP DETECTOR. OUTLINE OF SAWCUT SHOWN |
| | | TYPE D LOOP DETECTOR. OUTLINE OF SAWCUT SHOWN |
| | | TYPE E LOOP DETECTOR. OUTLINE OF SAWCUT SHOWN |
| | | TYPE Q LOOP DETECTOR. OUTLINE OF SAWCUT SHOWN |
| DH | dh | DETECTOR HANDHOLE |
| | | MICROWAVE OR VIDEO DETECTION ZONE |

STATE OF CALIFORNIA
DEPARTMENT OF TRANSPORTATION

# ELECTRICAL SYSTEMS (LEGEND AND ABBREVIATIONS)

NO SCALE

RSP ES-1C DATED OCTOBER 30, 2015 SUPERSEDES RSP ES-1C DATED JULY 19, 2013 AND STANDARD PLAN ES-1C DATED MAY 20, 2011 - PAGE 427 OF THE STANDARD PLANS BOOK DATED 2010.

**REVISED STANDARD PLAN RSP ES-1C**

**2010 REVISED STANDARD PLAN RSP ES-1C**

DATE PLOTTED => 14-JAN-2016
TIME PLOTTED => 14:29

| Dist | COUNTY | ROUTE | POST MILES TOTAL PROJECT | SHEET No. | TOTAL SHEETS |
|---|---|---|---|---|---|
| 01 | DN | 102 | 17.4 | 44 | 74 |

Theresa Gabriel
REGISTERED ELECTRICAL ENGINEER

October 30, 2015
PLANS APPROVAL DATE

REGISTERED PROFESSIONAL ENGINEER
Theresa Aziz Gabriel
No. E15129
Exp. 6-30-16
ELECTRICAL
STATE OF CALIFORNIA

*THE STATE OF CALIFORNIA OR ITS OFFICERS OR AGENTS SHALL NOT BE RESPONSIBLE FOR THE ACCURACY OR COMPLETENESS OF SCANNED COPIES OF THIS PLAN SHEET.*

TO ACCOMPANY PLANS DATED 01-11-16

2010 REVISED STANDARD PLAN RSP ES-2C

NOTES:

1. The plan shows the approximate location of devices within the enclosure. Components may be rearranged, however, the "working" clearances within the service equipment enclosure shall be maintained.

2. In unpaved areas a raised portland cement concrete pad 2'-0" x 4" x width of foundation shall be constructed in front of new service equipment enclosure installation. Pad shall be set to elevation of foundation.

3. Plug-in circuit breakers may be mounted in the vertical or horizontal position. Cable-in/cable-out circuit breakers shall be mounted in the vertical position.

4. Type III-AF and Type III-BF service equipment enclosures shall have the meter viewing windows located on the front side of the service equipment enclosures.

5. Type III-AR and Type III-BR service equipment enclosure shall be similarly constructed as Type III-AF and Type III-BF respectively, except the meter viewing windows shall be located on the back side of the service equipment enclosures.

STATE OF CALIFORNIA
DEPARTMENT OF TRANSPORTATION

# ELECTRICAL SYSTEMS (SERVICE EQUIPMENT ENCLOSURE NOTES TYPE III SERIES)

NO SCALE

RSP ES-2C DATED OCTOBER 30, 2015 SUPERSEDES STANDARD PLAN ES-2C DATED MAY 20, 2011 - PAGE 430 OF THE STANDARD PLANS BOOK DATED 2010.

**REVISED STANDARD PLAN RSP ES-2C**

DATE PLOTTED => 14-JAN-2016
TIME PLOTTED => 14:29

| Dist | COUNTY | ROUTE | POST MILES TOTAL PROJECT | SHEET No. | TOTAL SHEETS |
|---|---|---|---|---|---|
| 01 | DN | 102 | 17.4 | 45 | 74 |

Theresa Gabriel
REGISTERED ELECTRICAL ENGINEER

October 30, 2015
PLANS APPROVAL DATE

REGISTERED PROFESSIONAL ENGINEER Theresa Aziz Gabriel No. E15129 Exp. 6-30-16 ELECTRICAL STATE OF CALIFORNIA

*THE STATE OF CALIFORNIA OR ITS OFFICERS OR AGENTS SHALL NOT BE RESPONSIBLE FOR THE ACCURACY OR COMPLETENESS OF SCANNED COPIES OF THIS PLAN SHEET.*

TO ACCOMPANY PLANS DATED 01-11-16

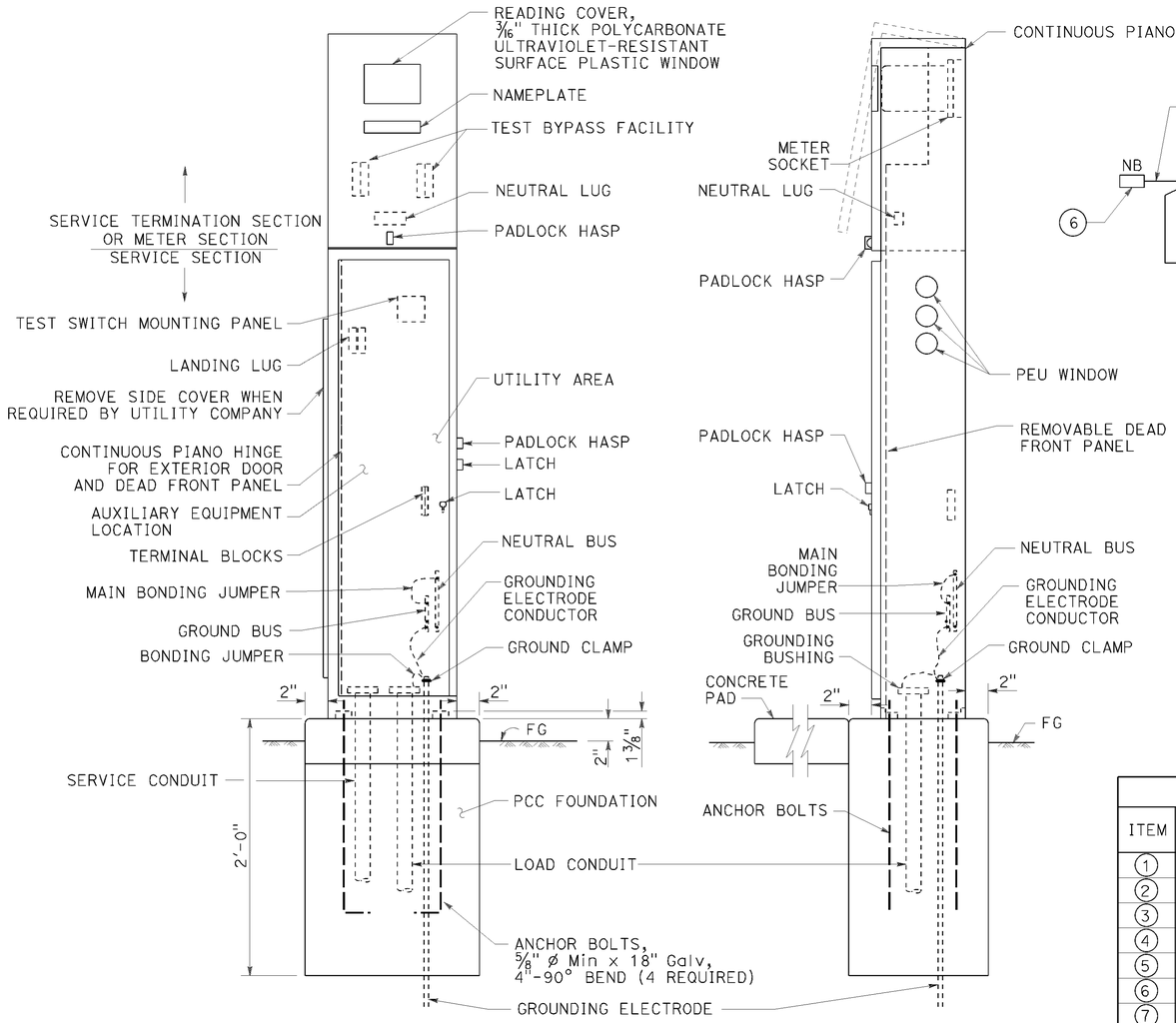


## TYPE III-AF SERVICE EQUIPMENT ENCLOSURE (TYPICAL)

DETAIL A

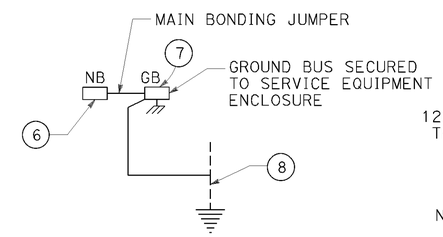


DETAIL D

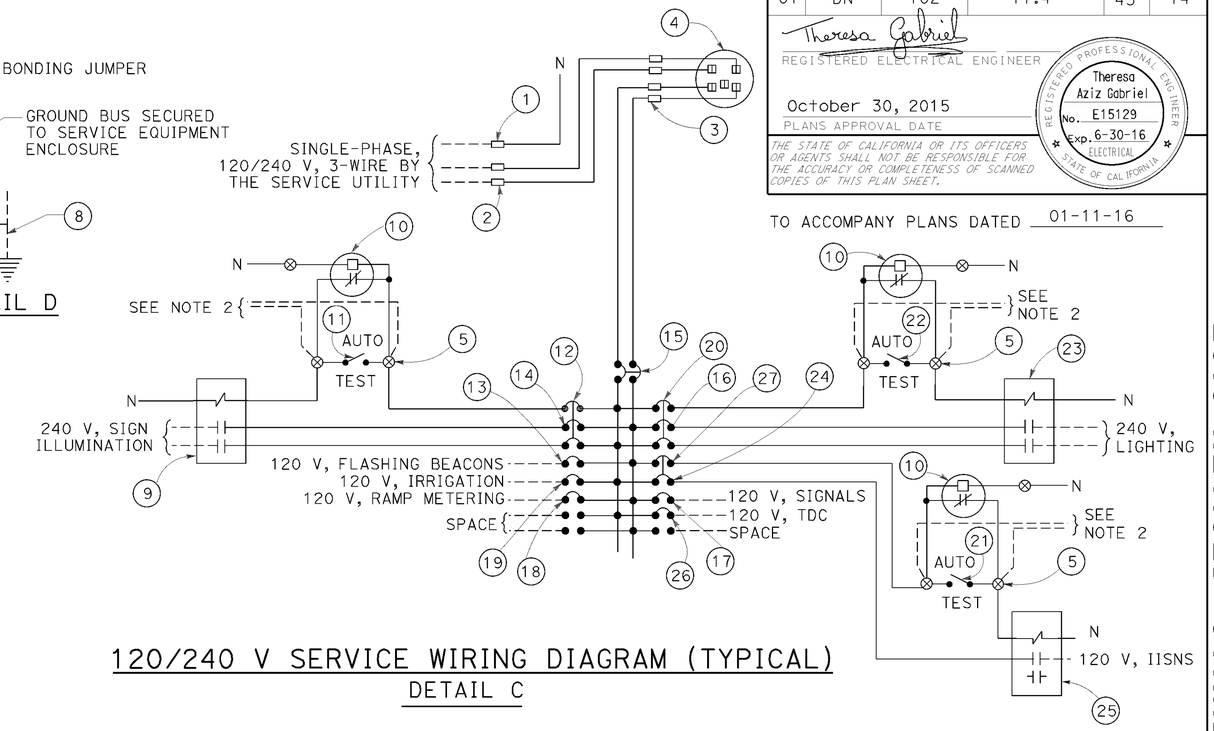


## 120/240 V SERVICE WIRING DIAGRAM (TYPICAL)

DETAIL C

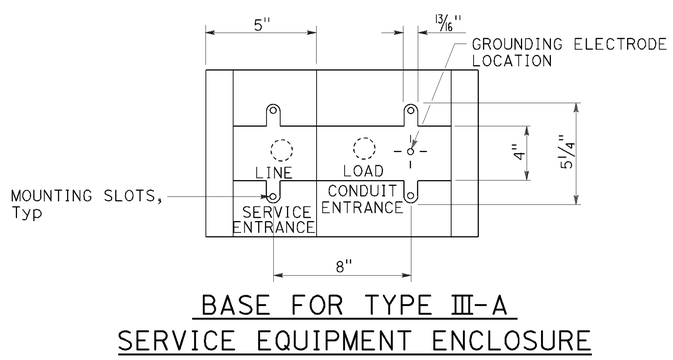


## BASE FOR TYPE III-A SERVICE EQUIPMENT ENCLOSURE

DETAIL B

### TYPE III-A SERVICE EQUIPMENT ENCLOSURE LEGEND (120/240 V)

| ITEM | COMPONENT | NAMEPLATE DESCRIPTION | ITEM | COMPONENT | NAMEPLATE DESCRIPTION |
|---|---|---|---|---|---|
| 1 | NEUTRAL LUG | | 14 | 30 A, 240 V, 2P, CB | SIGN ILLUMINATION |
| 2 | LANDING LUG | | 15 | 100 A, 240 V, 2P, CB | MAIN BREAKER |
| 3 | TEST BYPASS FACILITY | | 16 | 30 A, 240 V, 2P, CB | LIGHTING |
| 4 | METER SOCKET AND SUPPORT | | 17 | 50 A, 120 V, 1P, CB | SIGNALS |
| 5 | TERMINAL BLOCKS | | 18 | 30 A, 120 V, 1P, CB | RAMP METERING |
| 6 | NEUTRAL BUS | | 19 | 20 A, 120 V, 1P, CB | IRRIGATION |
| 7 | GROUND BUS | | 20 | 15 A, 120 V, 1P, CB | LIGHTING CONTROL |
| 8 | GROUNDING ELECTRODE | | 21 | 15 A, 1P, TEST SWITCH | IISNS TEST SWITCH |
| 9 | 30 A, 2P, NO CONTACTOR | SIGN ILLUMINATION | 22 | 15 A, 1P, TEST SWITCH | LIGHTING TEST SWITCH |
| 10 | PHOTOELECTRIC UNIT (NOTE 4) | PEU | 23 | 60 A, 2P, NO CONTACTOR | LIGHTING |
| 11 | 15 A, 1P, TEST SWITCH | SIGN ILLUMINATION TEST SWITCH | 24 | 15 A, 120 V, 1P, CB | IISNS |
| 12 | 15 A, 120 V, 1P, CB | SIGN ILLUMINATION CONTROL | 25 | 30 A, 2P, NO CONTACTOR | IISNS |
| 13 | 15 A, 120 V, 1P, CB | FLASHING BEACON | 26 | 20 A, 120 V, 1P, CB | TELEPHONE DEMARCATION CABINET |
| | | | 27 | 15 A, 120 V, 1P, CB | IISNS CONTROL |

NOTES:

1. Unless otherwise indicated on the plans, service equipment items shall be provided for each service equipment enclosure as shown.
2. Connect to remote test switch mounted on lighting standards, sign post or structure when required.
3. Items 1 and 6 shall be isolated from the service equipment enclosure.
4. Type V photoelectric control shall be used unless otherwise indicated on the plans.
5. Item 12, 20 and 27 shall be ganged operated CB.

STATE OF CALIFORNIA
DEPARTMENT OF TRANSPORTATION

# ELECTRICAL SYSTEMS (SERVICE EQUIPMENT ENCLOSURE AND TYPICAL WIRING DIAGRAM, TYPE III-A SERIES)

NO SCALE

RSP ES-2D DATED OCTOBER 30, 2015 SUPERSEDES STANDARD PLAN ES-2D DATED MAY 20, 2011 - PAGE 431 OF THE STANDARD PLANS BOOK DATED 2010.

**REVISED STANDARD PLAN RSP ES-2D**

**2010 REVISED STANDARD PLAN RSP ES-2D**

DATE PLOTTED => 14-JAN-2016
TIME PLOTTED => 14:29

| Dist | COUNTY | ROUTE | POST MILES TOTAL PROJECT | SHEET No. | TOTAL SHEETS |
|---|---|---|---|---|---|
| 01 | DN | 102 | 17.4 | 46 | 74 |

Theresa Gabriel
REGISTERED ELECTRICAL ENGINEER

October 30, 2015
PLANS APPROVAL DATE

REGISTERED PROFESSIONAL ENGINEER Theresa Aziz Gabriel No. E15129 Exp. 6-30-16 ELECTRICAL STATE OF CALIFORNIA

*THE STATE OF CALIFORNIA OR ITS OFFICERS OR AGENTS SHALL NOT BE RESPONSIBLE FOR THE ACCURACY OR COMPLETENESS OF SCANNED COPIES OF THIS PLAN SHEET.*

TO ACCOMPANY PLANS DATED 01-11-16

**2010 REVISED STANDARD PLAN RSP ES-3C**

NOTES:

1. Foundation shall be located to provide 2'-0" minimum clearance between face of curb and any portion of cabinet.
2. Controller units, plug-mounted equipment, shelf-mounted equipment and wall-mounted equipment shall be located to permit safe and easy removal or replacement without removing any other piece of equipment.
3. Cabinet fan may be installed at an alternate location near the top of the cabinet when approved by the Engineer.
4. Where telephone interconnect is required, a minimum of 5" clear vertical space shall be provided inside the cabinet for the equipment.
5. Telephone interconnect conductors shall be enclosed in a ¾"C or larger conduit through the foundation. Type 4 conduit shall be used to separate telephone and power conductors in cabinets.

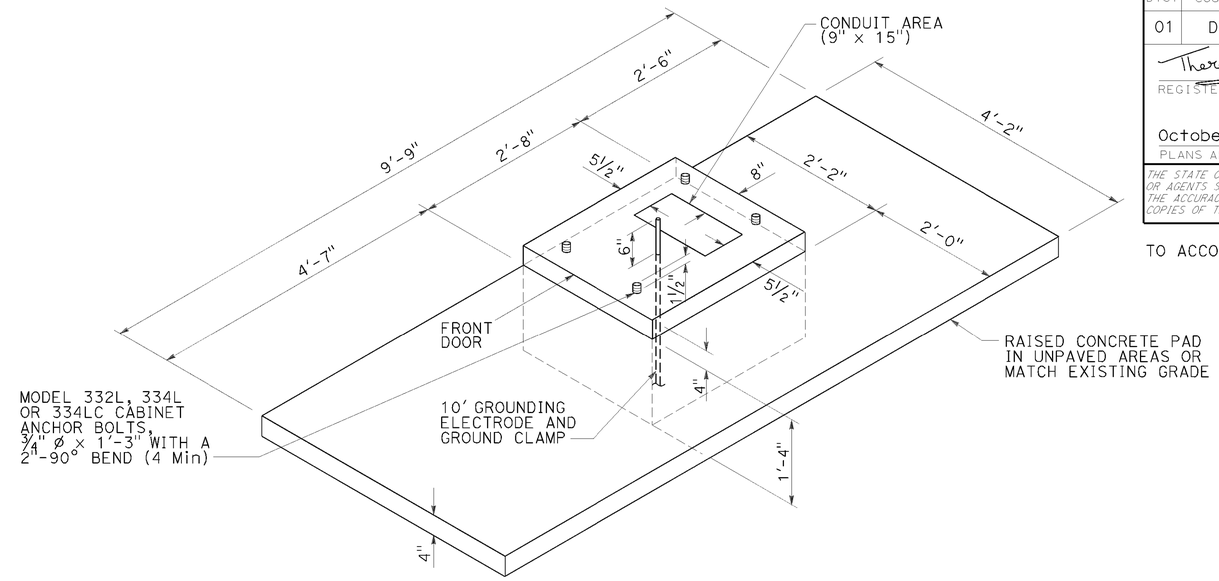


## FOUNDATION AND PAD DETAIL

Model 332L, 334L and 334LC

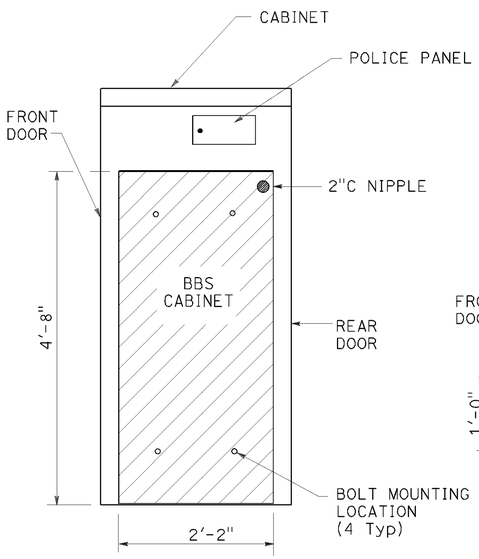


SIDE VIEW

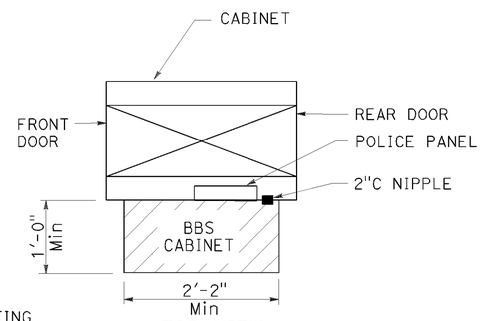


TOP VIEW

## BBS CABINET MOUNTED TO THE MODEL 332L CABINET

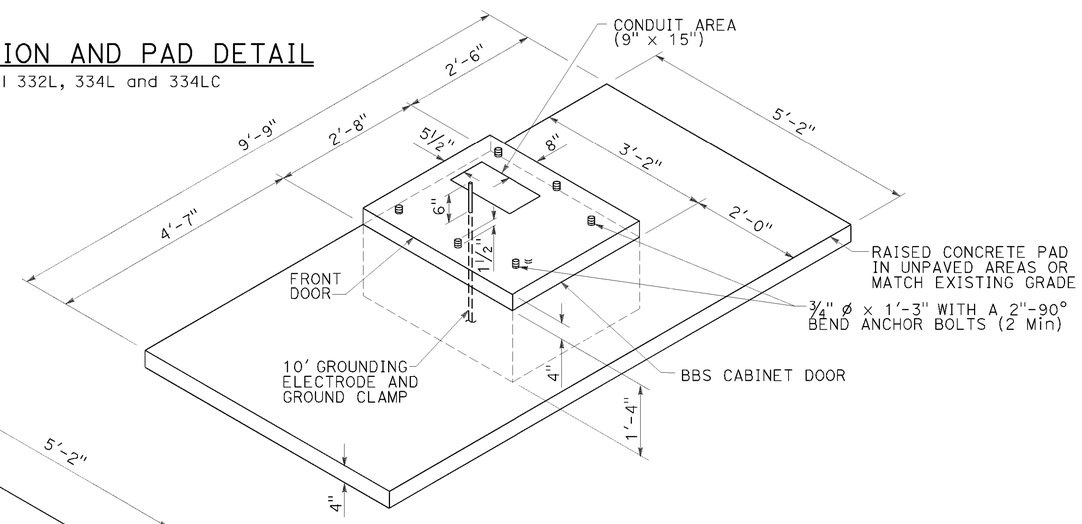


## RIGHT SIDE INSTALLATION

DETAIL B

## MODIFIED MODEL 332L CABINET FOUNDATION DETAIL FOR BATTERY BACKUP SYSTEM

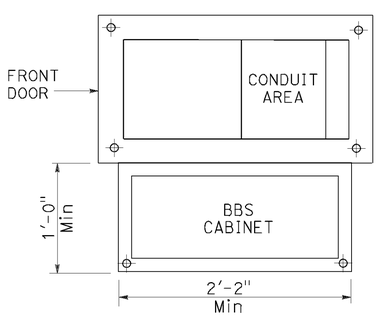


## BASE PLAN FOR BBS MOUNTED TO THE MODEL 332L CABINET

(FOR DIMENSIONS AND DETAILS NOT SHOWN, SEE CABINET HOUSING DETAILS OF THE TRANSPORTATION ELECTRICAL EQUIPMENT SPECIFICATION (TEES))

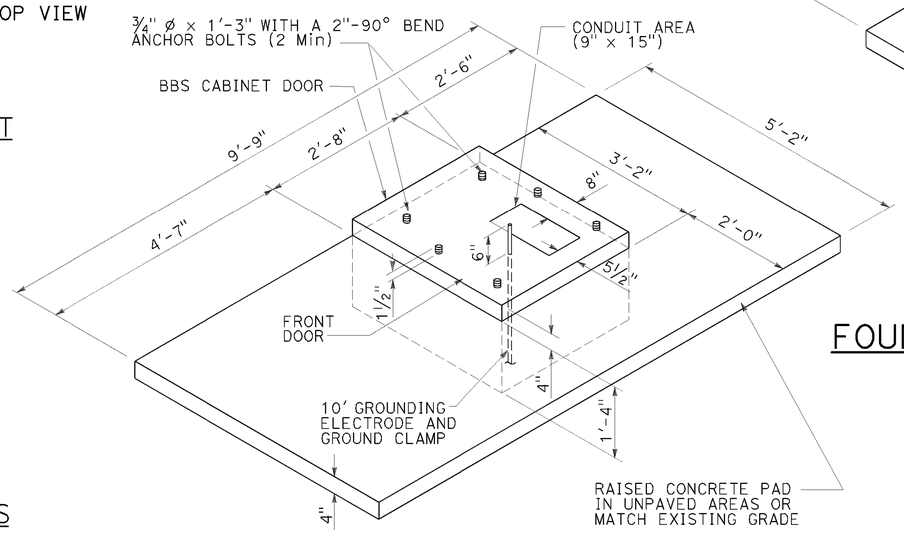


## LEFT SIDE INSTALLATION

DETAIL A

STATE OF CALIFORNIA
DEPARTMENT OF TRANSPORTATION

# ELECTRICAL SYSTEMS (CONTROLLER CABINET FOUNDATION AND PAD DETAILS)

NO SCALE

RSP ES-3C DATED OCTOBER 30, 2015 SUPERSEDES STANDARD PLAN ES-3C DATED MAY 20, 2011 - PAGE 437 OF THE STANDARD PLANS BOOK DATED 2010.

**REVISED STANDARD PLAN RSP ES-3C**

DATE PLOTTED => 14-JAN-2016
TIME PLOTTED => 14:29

| Dist | COUNTY | ROUTE | POST MILES TOTAL PROJECT | SHEET No. | TOTAL SHEETS |
|---|---|---|---|---|---|
| 01 | DN | 102 | 17.4 | 47 | 74 |

Theresa Gabriel
REGISTERED ELECTRICAL ENGINEER

October 30, 2015
PLANS APPROVAL DATE

REGISTERED PROFESSIONAL ENGINEER
Theresa Aziz Gabriel
No. E15129
Exp. 6-30-16
ELECTRICAL
STATE OF CALIFORNIA

*THE STATE OF CALIFORNIA OR ITS OFFICERS OR AGENTS SHALL NOT BE RESPONSIBLE FOR THE ACCURACY OR COMPLETENESS OF SCANNED COPIES OF THIS PLAN SHEET.*

TO ACCOMPANY PLANS DATED 01-11-16

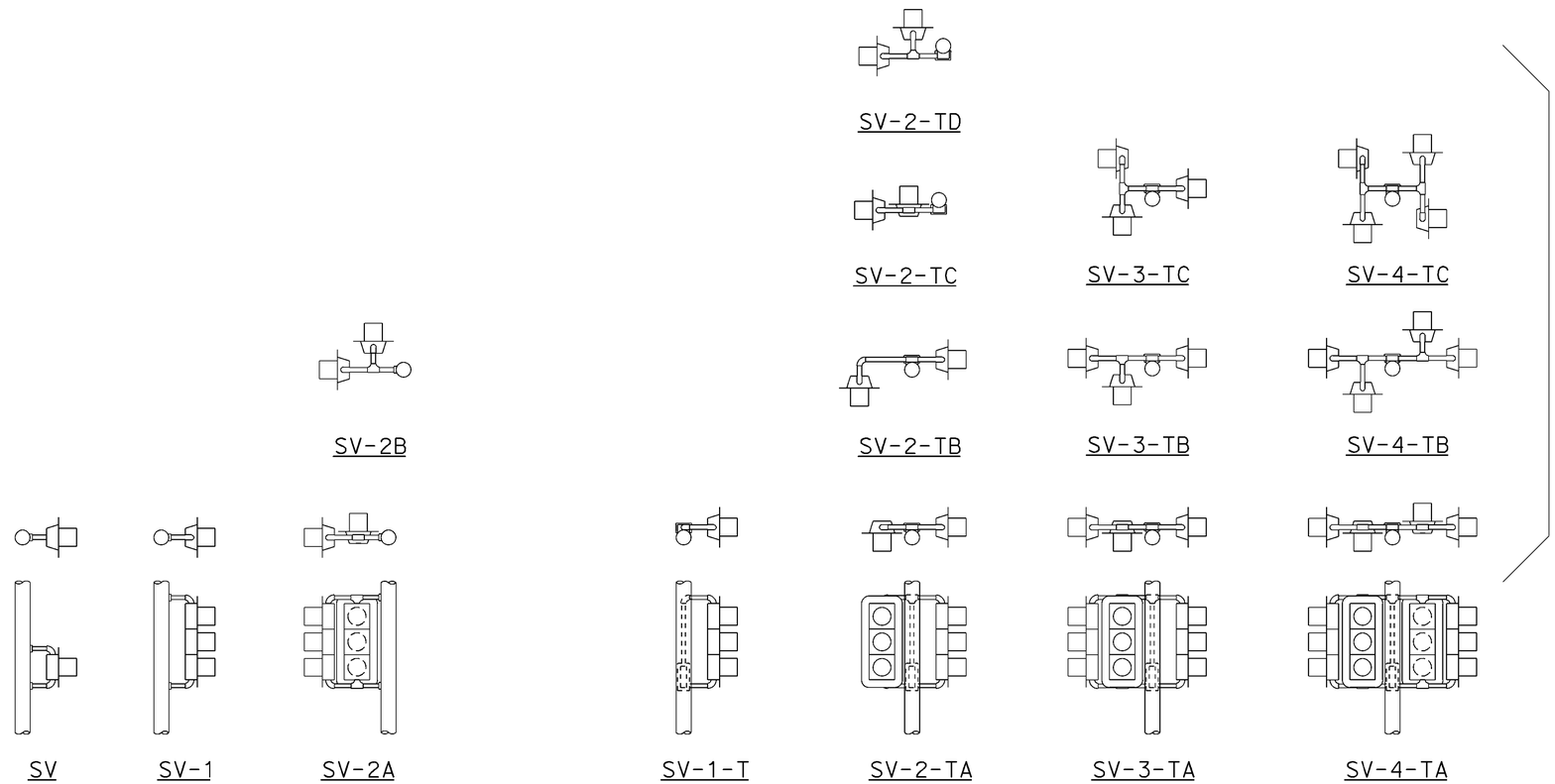


SIDE MOUNTINGS

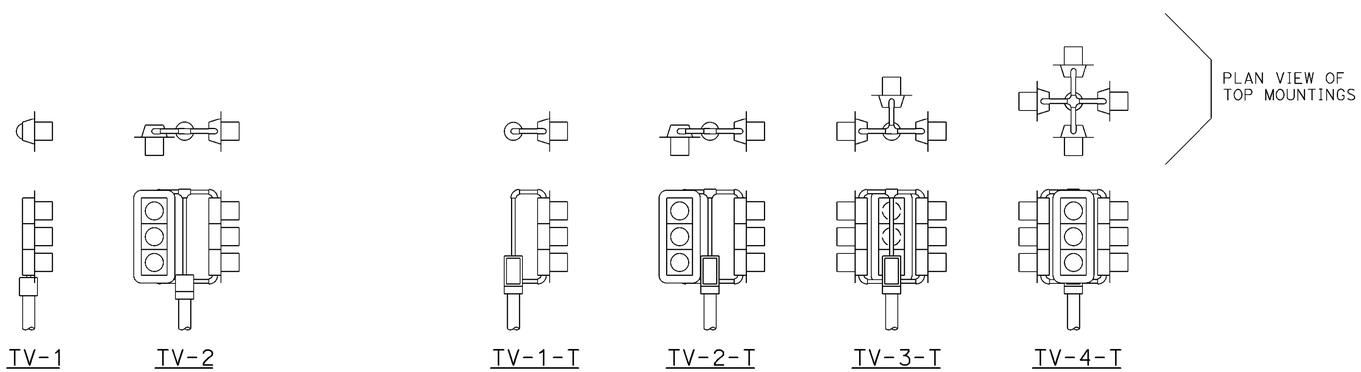


TOP MOUNTINGS

## ABBREVIATIONS:

| | |
|---|---|
| SV | SIDE MOUNTED SIGNAL HEADS |
| T | TERMINAL COMPARTMENT |
| TV | TOP MOUNTED SIGNAL HEADS |
| 1, 2, 3, 4 | NUMBER OF SIGNAL FACES (3 - SECTION, UNLESS OTHERWISE INDICATED) |
| A, B, C, D | CONFIGURATION OF SIGNALS |

## NOTES:

1. Mountings shall be oriented to provide maximum horizontal clearance to adjacent roadway.
2. Bracket arms shall be long enough to permit proper alignment of signals and backplate installation.
3. See Revised Standard Plans RSP ES-4D and RSP ES-4E for attachment fitting details.

STATE OF CALIFORNIA
DEPARTMENT OF TRANSPORTATION

# ELECTRICAL SYSTEMS (SIGNAL HEADS AND MOUNTINGS)

NO SCALE

RSP ES-4A DATED OCTOBER 30, 2015 SUPERSEDES RSP ES-4A DATED JULY 19, 2013 AND STANDARD PLAN ES-4A DATED MAY 20, 2011 - PAGE 443 OF THE STANDARD PLANS BOOK DATED 2010.

**REVISED STANDARD PLAN RSP ES-4A**

**2010 REVISED STANDARD PLAN RSP ES-4A**

DATE PLOTTED => 14-JAN-2016
TIME PLOTTED => 14:30

| Dist | COUNTY | ROUTE | POST MILES TOTAL PROJECT | SHEET No. | TOTAL SHEETS |
|---|---|---|---|---|---|
| 01 | DN | 102 | 17.4 | 48 | 74 |

Theresa Gabriel
REGISTERED ELECTRICAL ENGINEER

October 30, 2015
PLANS APPROVAL DATE

REGISTERED PROFESSIONAL ENGINEER Theresa Aziz Gabriel No. E15129 Exp. 6-30-16 ELECTRICAL STATE OF CALIFORNIA

*THE STATE OF CALIFORNIA OR ITS OFFICERS OR AGENTS SHALL NOT BE RESPONSIBLE FOR THE ACCURACY OR COMPLETENESS OF SCANNED COPIES OF THIS PLAN SHEET.*

TO ACCOMPANY PLANS DATED 01-11-16

**2010 REVISED STANDARD PLAN RSP ES-4C**

## VISORS

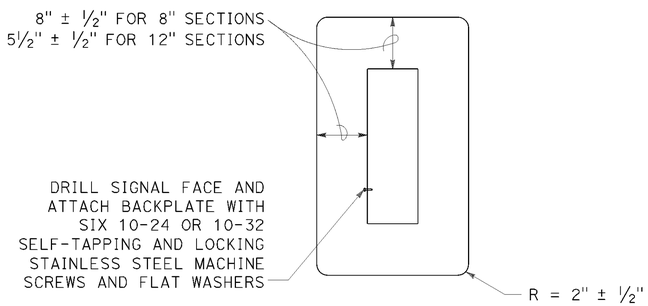


8" AND 12" SECTIONS

## BACKPLATE

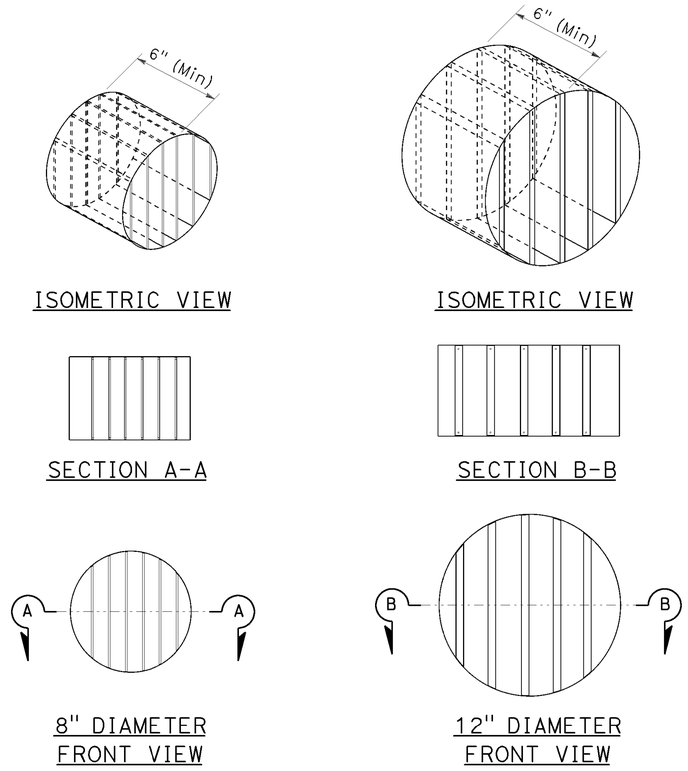


## DIRECTIONAL LOUVER

Directional louvers shall be oriented and secured in place with one plated brass machine screw and nut.

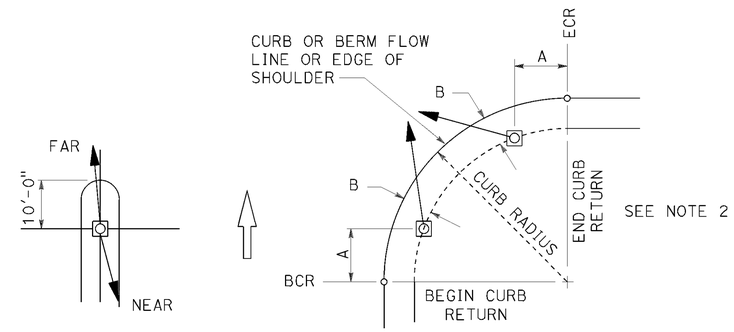


**NOTES:**

1. Typical signal pole placement unless dimensioned on plans.
2. For A and B dimensions, see Pole Schedule.

## SIGNAL STANDARD PLACEMENT DIMENSIONS AND EQUIPMENT LOCATIONS

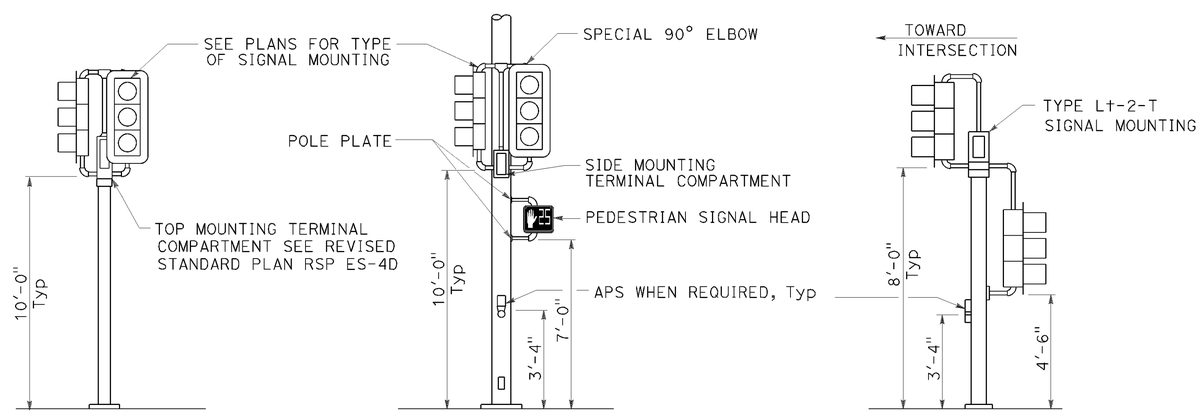


TOP MOUNTED SIGNALS (TV)
Type 1-A, 1-B, 1-C and 1-D standard as indicated on the plans

SIDE MOUNTED SIGNALS (SV AND SP)
Normally used on standards with luminaire or signal mast arm

LEFT TURN LANE SIGNAL
Type 1-A, 1-B, 1-C and 1-D standard as indicated on plans

## TYPICAL SIGNAL HEAD INSTALLATIONS

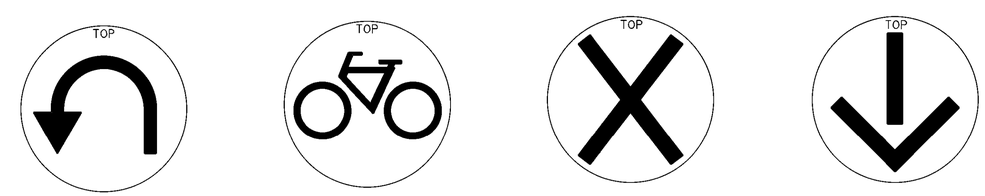


U-TURN | BICYCLE | LANE CONTROL | LANE CONTROL

## SIGNAL FACES

STATE OF CALIFORNIA
DEPARTMENT OF TRANSPORTATION

# ELECTRICAL SYSTEMS (SIGNAL HEADS AND MOUNTINGS)

NO SCALE

RSP ES-4C DATED OCTOBER 30, 2015 SUPERSEDES RSP ES-4C DATED JULY 19, 2013 AND STANDARD PLAN ES-4C DATED MAY 20, 2011 - PAGE 445 OF THE STANDARD PLANS BOOK DATED 2010.

**REVISED STANDARD PLAN RSP ES-4C**

DATE PLOTTED => 14-JAN-2016
TIME PLOTTED => 14:30

| Dist | COUNTY | ROUTE | POST MILES TOTAL PROJECT | SHEET No. | TOTAL SHEETS |
|---|---|---|---|---|---|
| 01 | DN | 102 | 17.4 | 49 | 74 |

Theresa Gabriel
REGISTERED ELECTRICAL ENGINEER

October 30, 2015
PLANS APPROVAL DATE

REGISTERED PROFESSIONAL ENGINEER Theresa Aziz Gabriel No. E15129 Exp. 6-30-16 ELECTRICAL STATE OF CALIFORNIA

*THE STATE OF CALIFORNIA OR ITS OFFICERS OR AGENTS SHALL NOT BE RESPONSIBLE FOR THE ACCURACY OR COMPLETENESS OF SCANNED COPIES OF THIS PLAN SHEET.*

TO ACCOMPANY PLANS DATED 01-11-16

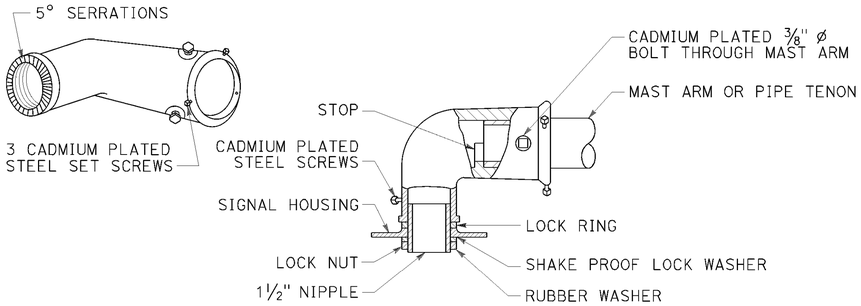


TYPE MAT
MAST ARM MOUNTING
For 2 NPS pipe, see Note 1.

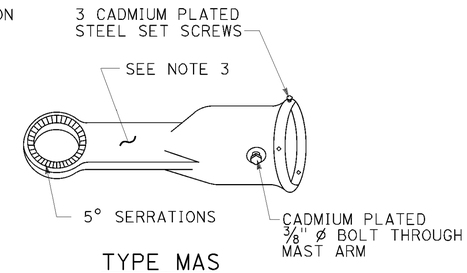


TYPE MAS
MAST ARM MOUNTING
For 2 NPS pipe, see Note 1.

SIGNAL SLIP FITTERS

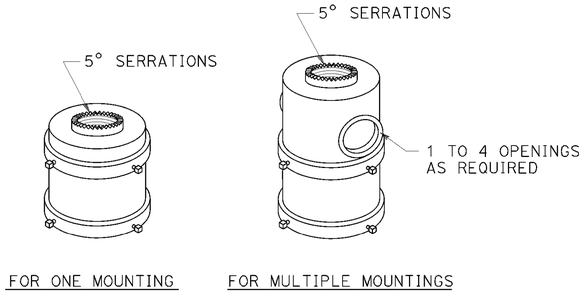


TOP MOUNTINGS
For 4 NPS pipe, see Note 2.

NOTES:

1. After mast arm signal has been plumbed and secured, drill 7/16" hole through mast arm tenon in line with slip fitter hole. Place a cadmium plated ⅜" ø galvanized bolt with washer under bolt head through hole and secure with washer, nut, and locknut. Seal openings between mast arm mountings and mast arm with mastic.
2. (A) Threaded top mounted slip fitter openings shall be 1½ NPS.
   (B) Serrations in fittings shall match those on bottom of signal heads or in lock ring.
   (C) Top opening shall be offset when backplate is used.
3. Wireway shall have a cross section area of 0.95 square inch minimum. Minimum width of ½".

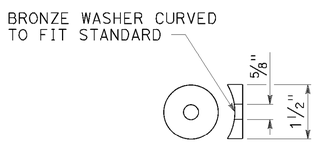


DETAIL C

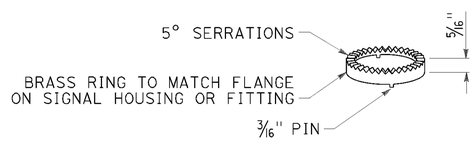


LOCK RING
Use where locking ring is not integral With signal housing or fitting.

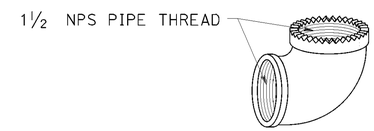


SPECIAL 90° ELBOW
One for each signal head, except those With special slip fitter mounting

MISCELLANEOUS MOUNTING HARDWARE

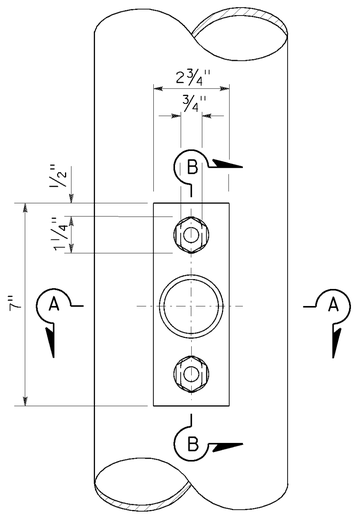


TOP VIEW

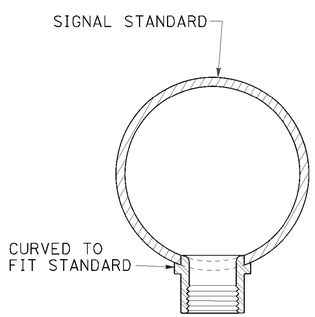


SECTION A-A

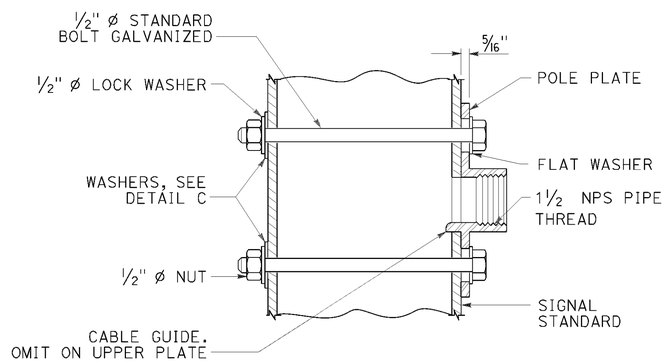


SECTION B-B

POLE PLATE FOR SIDE MOUNTED SIGNAL HEAD
WITHOUT TERMINAL COMPARTMENT

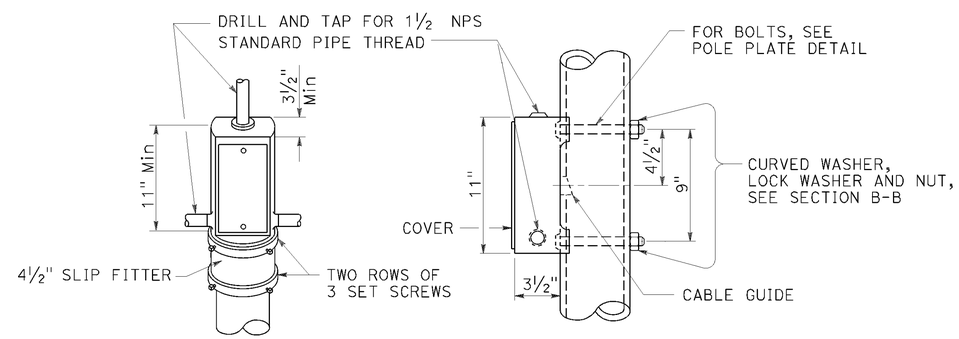


TOP MOUNTING

SIDE MOUNTING

TERMINAL COMPARTMENT

STATE OF CALIFORNIA
DEPARTMENT OF TRANSPORTATION

# ELECTRICAL SYSTEMS (SIGNAL HEAD MOUNTING)

NO SCALE

RSP ES-4D DATED OCTOBER 30, 2015 SUPERSEDES STANDARD PLAN ES-4D DATED MAY 20, 2011 - PAGE 446 OF THE STANDARD PLANS BOOK DATED 2010.

**REVISED STANDARD PLAN RSP ES-4D**

**2010 REVISED STANDARD PLAN RSP ES-4D**

DATE PLOTTED => 14-JAN-2016
TIME PLOTTED => 14:30

| Dist | COUNTY | ROUTE | POST MILES TOTAL PROJECT | SHEET No. | TOTAL SHEETS |
|---|---|---|---|---|---|
| 01 | DN | 102 | 17.4 | 50 | 74 |

Theresa Gabriel
REGISTERED ELECTRICAL ENGINEER

October 30, 2015
PLANS APPROVAL DATE

REGISTERED PROFESSIONAL ENGINEER
Theresa Aziz Gabriel
No. E15129
Exp. 6-30-16
ELECTRICAL
STATE OF CALIFORNIA

*THE STATE OF CALIFORNIA OR ITS OFFICERS OR AGENTS SHALL NOT BE RESPONSIBLE FOR THE ACCURACY OR COMPLETENESS OF SCANNED COPIES OF THIS PLAN SHEET.*

TO ACCOMPANY PLANS DATED 01-11-16

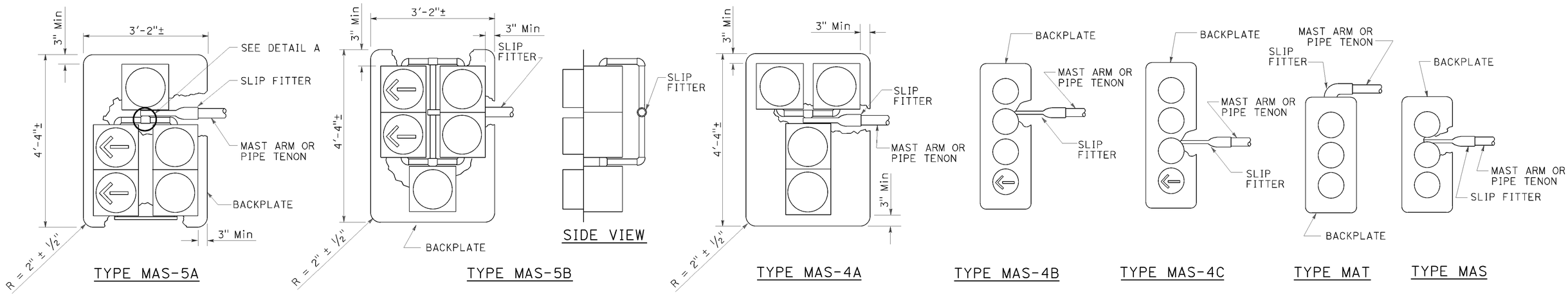


MAST ARM MOUNTINGS

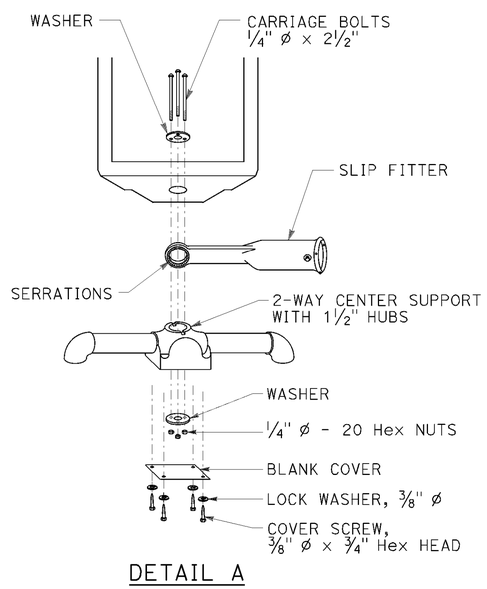


DETAIL A

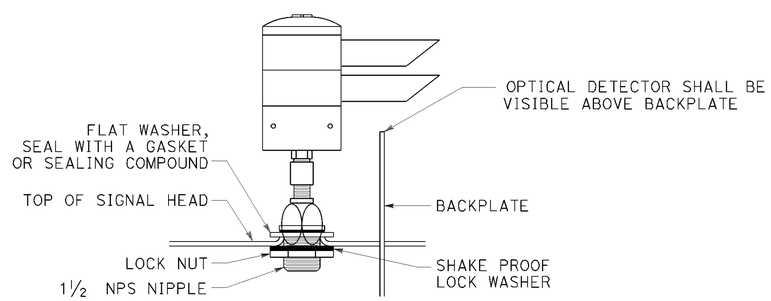


OPTICAL DETECTOR MOUNTING FOR EMERGENCY VEHICLE DETECTION

DETAIL B

STATE OF CALIFORNIA
DEPARTMENT OF TRANSPORTATION

# ELECTRICAL SYSTEMS (SIGNAL HEADS AND OPTICAL DETECTOR MOUNTING)

NO SCALE

RSP ES-4E DATED OCTOBER 30, 2015 SUPERSEDES RSP ES-4E DATED JULY 19, 2013 AND STANDARD PLAN ES-4E DATED MAY 20, 2011 - PAGE 447 OF THE STANDARD PLANS BOOK DATED 2010.

**REVISED STANDARD PLAN RSP ES-4E**

**2010 REVISED STANDARD PLAN RSP ES-4E**

DATE PLOTTED => 14-JAN-2016
TIME PLOTTED => 14:30

| Dist | COUNTY | ROUTE | POST MILES TOTAL PROJECT | SHEET No. | TOTAL SHEETS |
|---|---|---|---|---|---|
| 01 | DN | 102 | 17.4 | 51 | 74 |

Theresa Gabriel
REGISTERED ELECTRICAL ENGINEER

October 30, 2015
PLANS APPROVAL DATE

REGISTERED PROFESSIONAL ENGINEER
Theresa Aziz Gabriel
No. E15129
Exp. 6-30-16
ELECTRICAL
STATE OF CALIFORNIA

*THE STATE OF CALIFORNIA OR ITS OFFICERS OR AGENTS SHALL NOT BE RESPONSIBLE FOR THE ACCURACY OR COMPLETENESS OF SCANNED COPIES OF THIS PLAN SHEET.*

TO ACCOMPANY PLANS DATED 01-11-16

**2010 REVISED STANDARD PLAN RSP ES-5A**

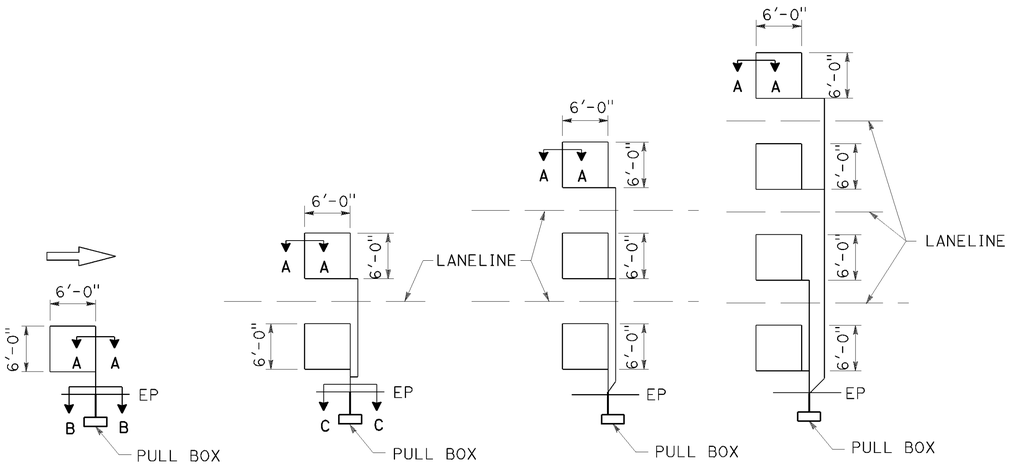


TYPE 1A INSTALLATION | TYPE 2A INSTALLATION | TYPE 3A INSTALLATION | TYPE 4A INSTALLATION

## SAWCUT DETAILS

Type A loop detector configurations illustrated

1. 1A thru 4A = 1 Type A loop configuration in each lane.
2. 1B thru 4B = 1 Type B loop configuration in each lane.
3. 1C = 1 Type C loop configuration entering lanes as required.
4. 1D thru 4D = 1 Type D loop configuration in each lane.
5. 1E thru 4E = 1 Type E loop configuration in each lane.
6. 1Q thru 4Q = 1 Type Q loop configuration in each lane.

Use Type A, B, C, D, E or Q loop detector configurations only when specified or shown on plans.

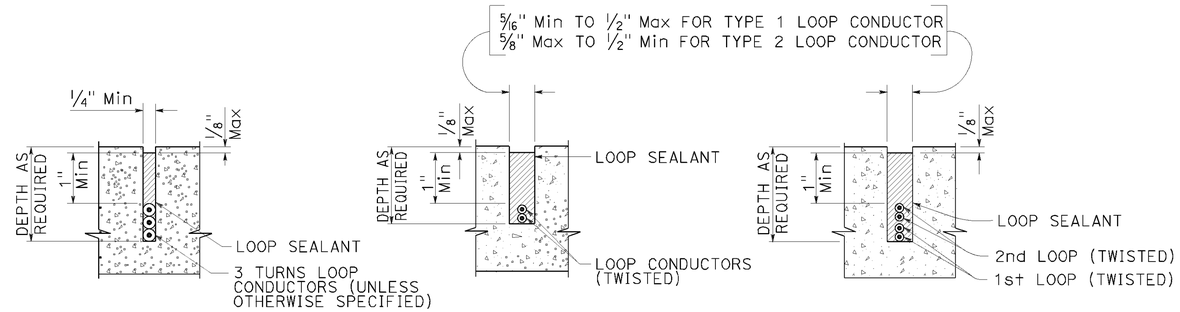


SECTION A-A | SECTION B-B | SECTION C-C

## SLOT DETAILS - TYPE 1 AND TYPE 2 LOOP CONDUCTOR

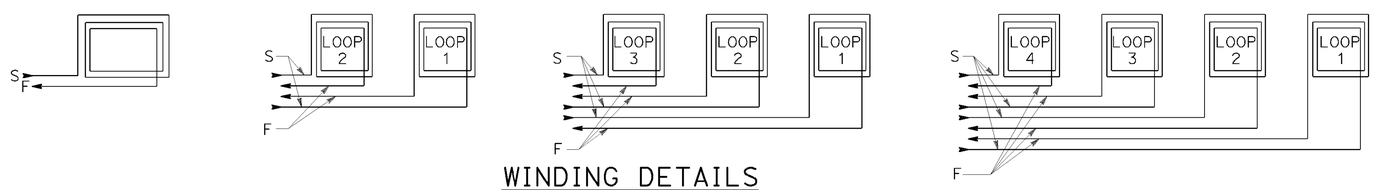


## WINDING DETAILS

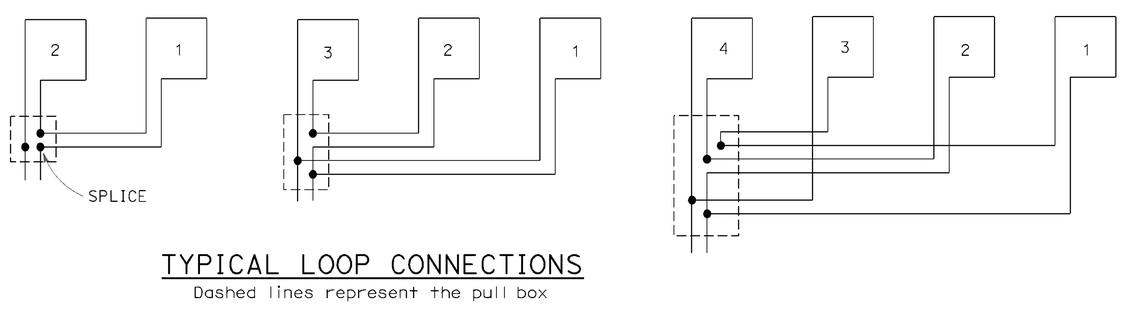


## TYPICAL LOOP CONNECTIONS

Dashed lines represent the pull box

## ABBREVIATIONS:

S - START
F - FINISH

STATE OF CALIFORNIA
DEPARTMENT OF TRANSPORTATION

# ELECTRICAL SYSTEMS (LOOP DETECTORS)

NO SCALE

RSP ES-5A DATED OCTOBER 30, 2015 SUPERSEDES STANDARD PLAN ES-5A DATED MAY 20, 2011 - PAGE 448 OF THE STANDARD PLANS BOOK DATED 2010.

**REVISED STANDARD PLAN RSP ES-5A**

DATE PLOTTED => 14-JAN-2016
TIME PLOTTED => 14:30

| Dist | COUNTY | ROUTE | POST MILES TOTAL PROJECT | SHEET No. | TOTAL SHEETS |
|---|---|---|---|---|---|
| 01 | DN | 102 | 17.4 | 52 | 74 |

Theresa Gabriel
REGISTERED ELECTRICAL ENGINEER

October 30, 2015
PLANS APPROVAL DATE

REGISTERED PROFESSIONAL ENGINEER Theresa Aziz Gabriel No. E15129 Exp. 6-30-16 ELECTRICAL STATE OF CALIFORNIA

*THE STATE OF CALIFORNIA OR ITS OFFICERS OR AGENTS SHALL NOT BE RESPONSIBLE FOR THE ACCURACY OR COMPLETENESS OF SCANNED COPIES OF THIS PLAN SHEET.*

TO ACCOMPANY PLANS DATED 01-11-16

**2010 REVISED STANDARD PLAN RSP ES-5B**

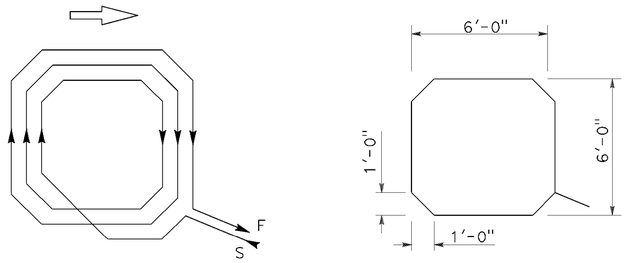


WINDING DETAIL SAWCUT DETAIL

TYPE A LOOP DETECTOR CONFIGURATION

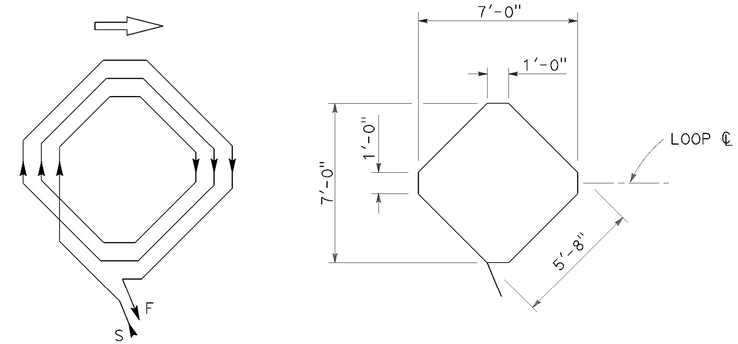


WINDING DETAIL SAWCUT DETAIL

TYPE B LOOP DETECTOR CONFIGURATION

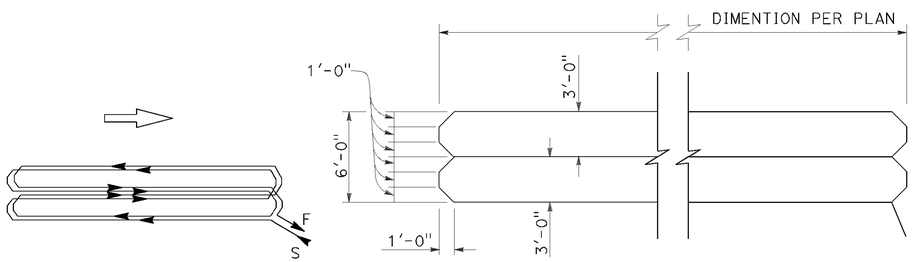


WINDING DETAIL SAWCUT DETAIL

TYPE C LOOP DETECTOR CONFIGURATION

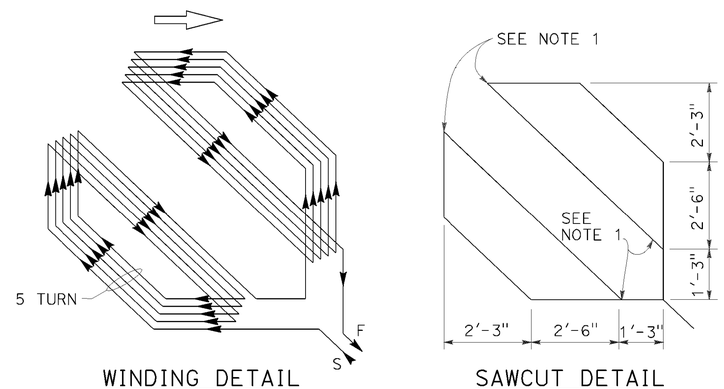


WINDING DETAIL SAWCUT DETAIL

TYPE D LOOP DETECTOR CONFIGURATION

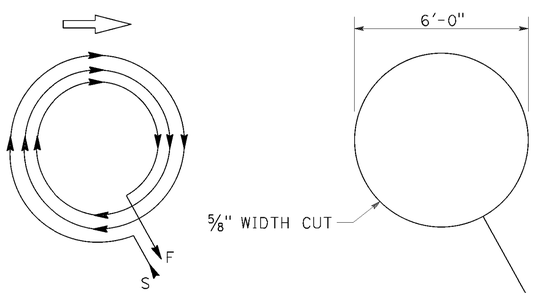


WINDING DETAIL SAWCUT DETAIL

TYPE E LOOP DETECTOR CONFIGURATION

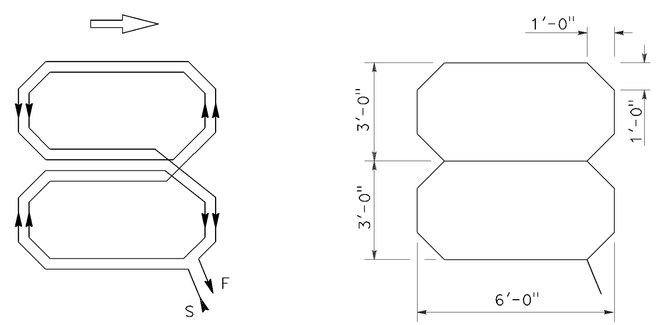


WINDING DETAIL SAWCUT DETAIL

TYPE Q LOOP DETECTOR CONFIGURATION

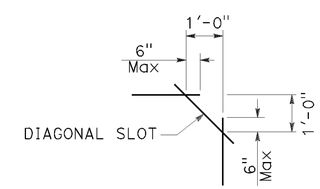


PLAN VIEW OF DIAGONAL SLOT AT CORNERS

NOTES:

1. Round corners of acute angle sawcuts to prevent damage to conductors.
2. Typical distance separating loops from edge to edge is 10' for Type A, B, D and E installation in single lane.
3. Use Type D loops for limit line detector installations in left turn and bicycle lanes.

STATE OF CALIFORNIA
DEPARTMENT OF TRANSPORTATION

# ELECTRICAL SYSTEMS (DETECTORS)

NO SCALE

RSP ES-5B DATED OCTOBER 30, 2015 SUPERSEDES RSP ES-5B DATED JULY 19, 2013 AND STANDARD PLAN ES-5B DATED MAY 20, 2011 - PAGE 449 OF THE STANDARD PLANS BOOK DATED 2010.

**REVISED STANDARD PLAN RSP ES-5B**

DATE PLOTTED => 14-JAN-2016
TIME PLOTTED => 14:30

| Dist | COUNTY | ROUTE | POST MILES TOTAL PROJECT | SHEET No. | TOTAL SHEETS |
|---|---|---|---|---|---|
| 01 | DN | 102 | 17.4 | 53 | 74 |

Theresa Gabriel
REGISTERED ELECTRICAL ENGINEER

October 30, 2015
PLANS APPROVAL DATE

REGISTERED PROFESSIONAL ENGINEER Theresa Aziz Gabriel No. E15129 Exp. 6-30-16 ELECTRICAL STATE OF CALIFORNIA

*THE STATE OF CALIFORNIA OR ITS OFFICERS OR AGENTS SHALL NOT BE RESPONSIBLE FOR THE ACCURACY OR COMPLETENESS OF SCANNED COPIES OF THIS PLAN SHEET.*

TO ACCOMPANY PLANS DATED 01-11-16

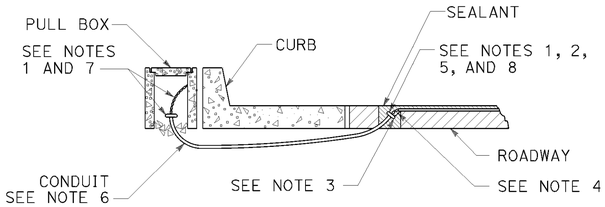


TYPE A
## CURB TERMINATION DETAIL

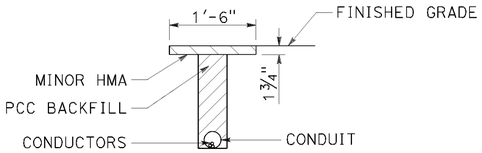


## "T" TRENCH DETAIL T

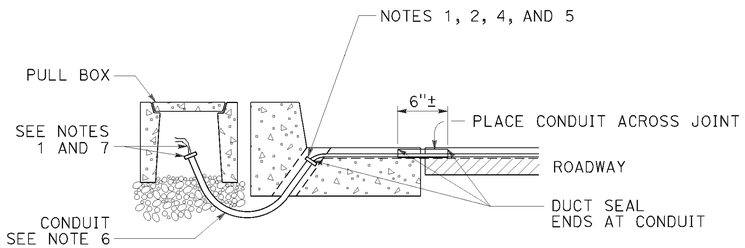


CROSS SECTION

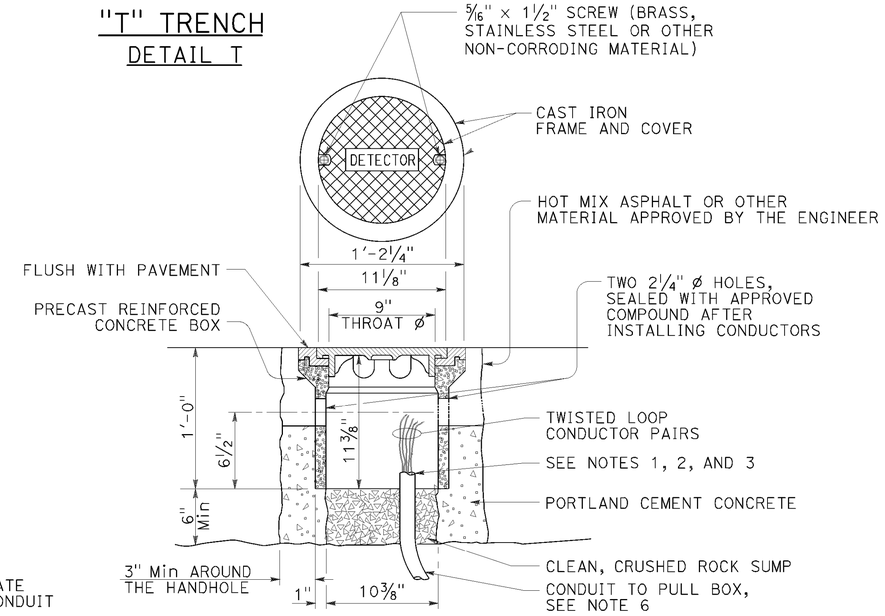


## DETECTOR HANDHOLE DETAIL

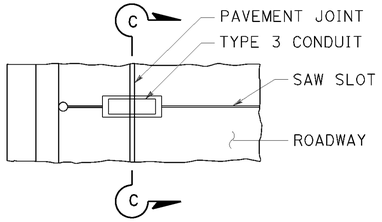


PLAN VIEW

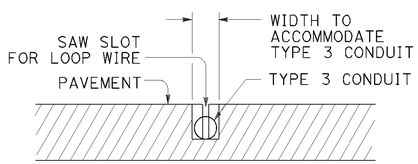


SECTION C-C

TYPE B
## CURB TERMINATION DETAIL

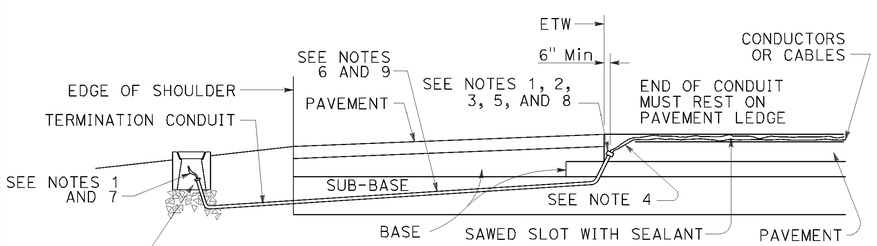


CROSS SECTION

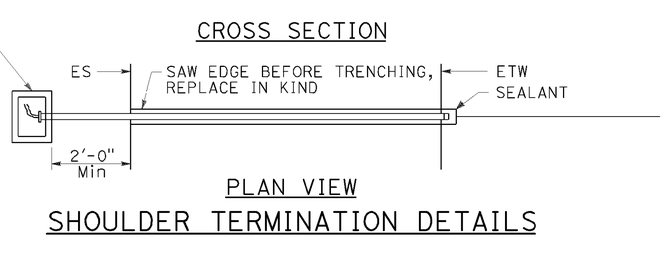


PLAN VIEW

## SHOULDER TERMINATION DETAILS

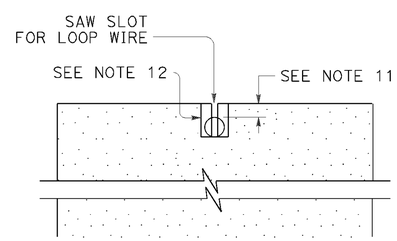


SECTION A-A

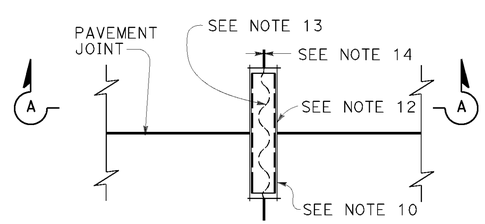


PLAN VIEW

## TYPICAL LOOP LEAD-IN DETAIL AT PAVEMENT JOINT

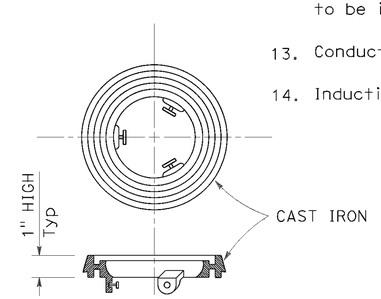


## LOCKING GRADE RING

NOTES:

1. Bushing shall be used at end of conduit.
2. Tape detector conductors or cables 3" each side of bushings.
3. Install duct seal compound to each end of termination conduit before installing sealant.
4. Round all sharp edges where detector conductors or cables have to pass.
5. End of conduit shall be 3⅛" below roadway surface.
6. 

| Conduit size | Loop conductors |
|---|---|
| 1"C minimum | 1 to 2 pairs |
| 1½"C minimum | 3 to 4 pairs |
| 2"C minimum | 5 or more pairs |

7. Splice detector conductors or cables to detector lead-in-cable.
8. Location of detector handhole when shown on plans.
9. When the shoulder and traveled way are paved with the same material and there is no joint between them, the conduit shall extend only 2'-0" into the shoulder pavement.
10. ¾"C, Type 3 conduit 6" long minimum, plug both ends with duct compound to keep out sealant.
11. ½" Minimum between top of conduit and pavement surface.
12. Sawcut shall not exceed 1" in width and ⅛" longer than conduit to be installed.
13. Conductors with ½" minimum slack inside conduit.
14. Inductive loop detector saw slot.

STATE OF CALIFORNIA
DEPARTMENT OF TRANSPORTATION

# ELECTRICAL SYSTEMS (CURB AND SHOULDER TERMINATION, TRENCH, AND HANDHOLE DETAILS)

NO SCALE

RSP ES-5D DATED OCTOBER 30, 2015 SUPERSEDES RSP ES-5D DATED JULY 19, 2013 AND STANDARD PLAN ES-5D DATED MAY 20, 2011 - PAGE 451 OF THE STANDARD PLANS BOOK DATED 2010.

**REVISED STANDARD PLAN RSP ES-5D**

**2010 REVISED STANDARD PLAN RSP ES-5D**

DATE PLOTTED => 14-JAN-2016
TIME PLOTTED => 14:31

| Dist | COUNTY | ROUTE | POST MILES TOTAL PROJECT | SHEET No. | TOTAL SHEETS |
|---|---|---|---|---|---|
| 01 | DN | 102 | 17.4 | 54 | 74 |

REGISTERED CIVIL ENGINEER

October 30, 2015
PLANS APPROVAL DATE

REGISTERED PROFESSIONAL ENGINEER
Stanley P. Johnson
No. C57793
Exp. 3-31-16
CIVIL
STATE OF CALIFORNIA

*THE STATE OF CALIFORNIA OR ITS OFFICERS OR AGENTS SHALL NOT BE RESPONSIBLE FOR THE ACCURACY OR COMPLETENESS OF SCANNED COPIES OF THIS PLAN SHEET.*

TO ACCOMPANY PLANS DATED 01-11-16

**2010 REVISED STANDARD PLAN RSP ES-6A**

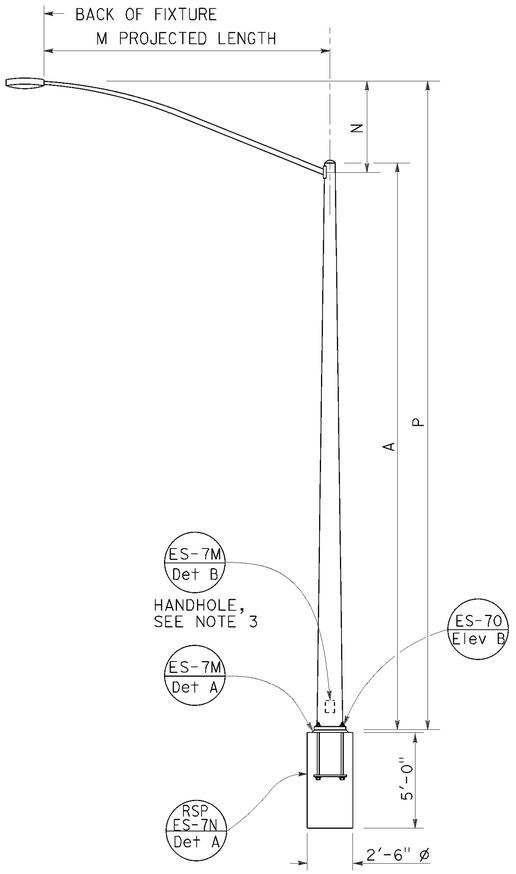


TYPE 15 AND TYPE 21
ELEVATION A

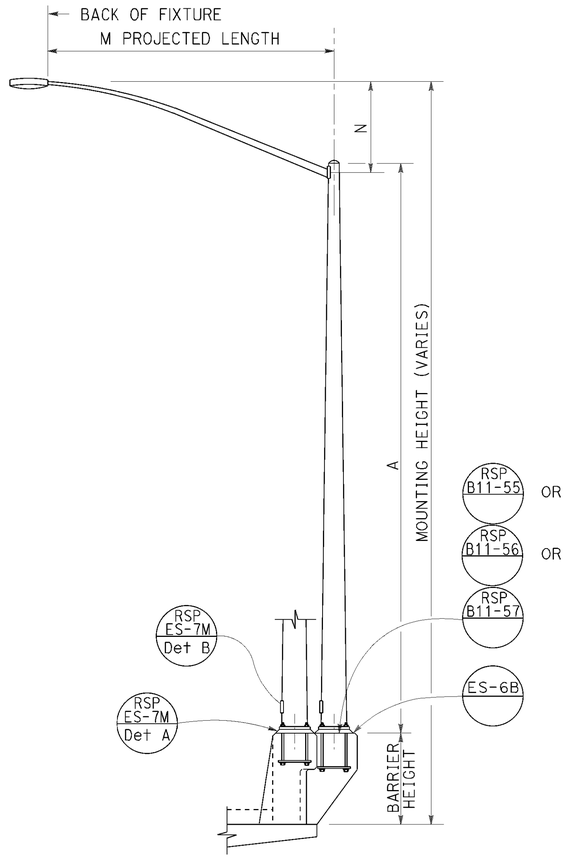


TYPE 15 AND TYPE 21 BARRIER RAIL MOUNTED
ELEVATION B

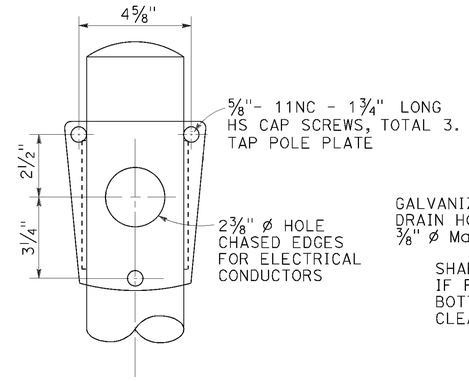


FRONT VIEW

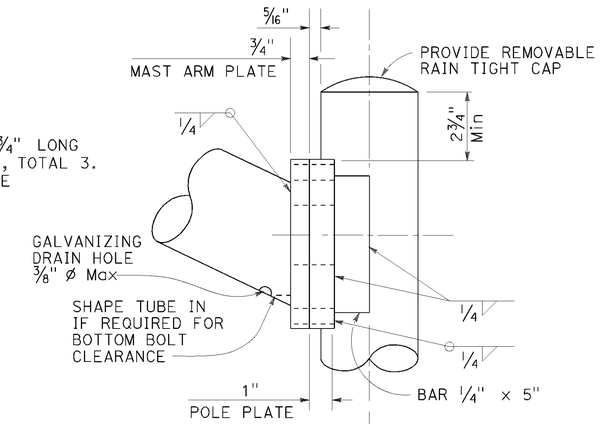


SIDE VIEW

LUMINAIRE MAST ARM CONNECTION
DETAIL R

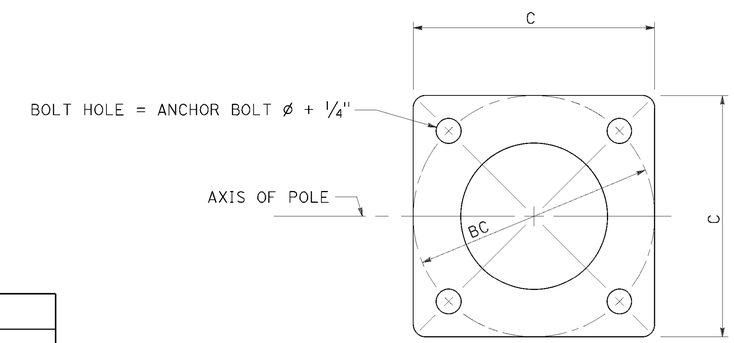


BASE PLATE
DETAIL A

| POLE TYPE | POLE DATA | | | | BASE PLATE DATA | | | |
|---|---|---|---|---|---|---|---|---|
| | A HEIGHT | Min OD BASE | Min OD TOP | WALL THICKNESS | C | BC = BOLT CIRCLE | THICKNESS | ANCHOR BOLT SIZE |
| 15 | 30'-0" | 8" | 3 11/16" | 0.1196" | 1'-0" | 1'-0" | 2" | 1" ø x 3'-0" * |
| 21 | 35'-0" | 8 5/8" | 3 9/16" | 0.1793" | | | | 1 1/4" ø x 3'-0" * |

* FOR BARRIER RAIL BOLTS, SEE STANDARD PLAN ES-6B.

| LUMINAIRE MAST ARM DATA | | | | | |
|---|---|---|---|---|---|
| M PROJECTED LENGTH | N RISE | Min OD AT POLE | NOMINAL THICKNESS | P TYPE 15 | P TYPE 21 |
| 6'-0" | 2'-0"± | 3 1/4" | 0.1196" | 31'-6"± | 36'-6"± |
| 8'-0" | 2'-6"± | 3 1/2" | | 32'-0"± | 37'-0"± |
| 10'-0" | 3'-3"± | 3 7/8" | | 32'-9"± | 37'-9"± |
| 12'-0" | 4'-3"± | | | 33'-9"± | 38'-9"± |
| 15'-0" | 4'-9"± | 4 1/4" | | 34'-3"± | 39'-3"± |

NOTES:

1. [ ] Indicates mast arm length to be used unless otherwise noted on the plans.
2. For Type 15-SB, use Type 15 standard with Type 30 slip base plate details, see Revised Standard Plan RSP ES-6F.
3. Handhole shall be located on the downstream side of traffic.
4. For additional notes and details, see Revised Standard Plans RSP ES-7M and RSP ES-7N.

STATE OF CALIFORNIA
DEPARTMENT OF TRANSPORTATION

# ELECTRICAL SYSTEMS (LIGHTING STANDARD, TYPES 15 AND 21)

NO SCALE

RSP ES-6A DATED OCTOBER 30, 2015 SUPERSEDES STANDARD PLAN ES-6A DATED MAY 20, 2011 - PAGE 452 OF THE STANDARD PLANS BOOK DATED 2010.

**REVISED STANDARD PLAN RSP ES-6A**

DATE PLOTTED => 14-JAN-2016
TIME PLOTTED => 14:31

| Dist | COUNTY | ROUTE | POST MILES TOTAL PROJECT | SHEET No. | TOTAL SHEETS |
|---|---|---|---|---|---|
| 01 | DN | 102 | 17.4 | 55 | 74 |

REGISTERED CIVIL ENGINEER

October 30, 2015
PLANS APPROVAL DATE

REGISTERED PROFESSIONAL ENGINEER
Stanley P. Johnson
No. C57793
Exp. 3-31-16
CIVIL
STATE OF CALIFORNIA

*THE STATE OF CALIFORNIA OR ITS OFFICERS OR AGENTS SHALL NOT BE RESPONSIBLE FOR THE ACCURACY OR COMPLETENESS OF SCANNED COPIES OF THIS PLAN SHEET.*

TO ACCOMPANY PLANS DATED 01-11-16

## NOTES:

1. [ ] Indicates mast arm length to be used unless otherwise noted on the plans.
2. For additional notes and details, see Revised Standard Plans RSP ES-7M and RSP ES-7N.
3. See Concrete Barrier Details Type 60E and 60SE.
4. For locations with one arm, plug unused cap screw holes and chased outlet with galvanized cap screws and knockout plug.
5. Handhole shall be located perpendicular to the luminaire mast arm and as directed by the Engineer.

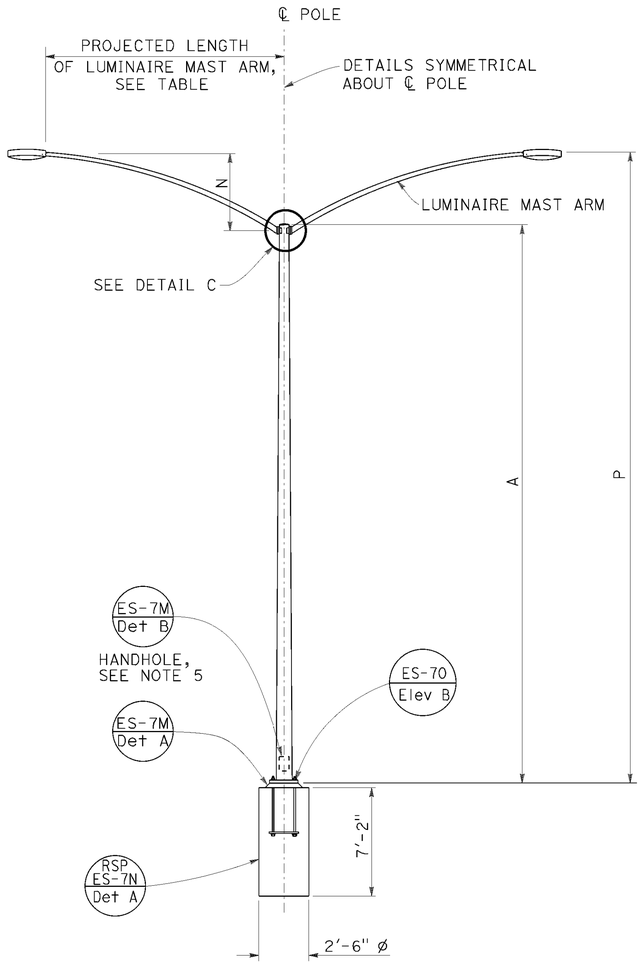


TYPE 15D AND TYPE 21D
ELEVATION A

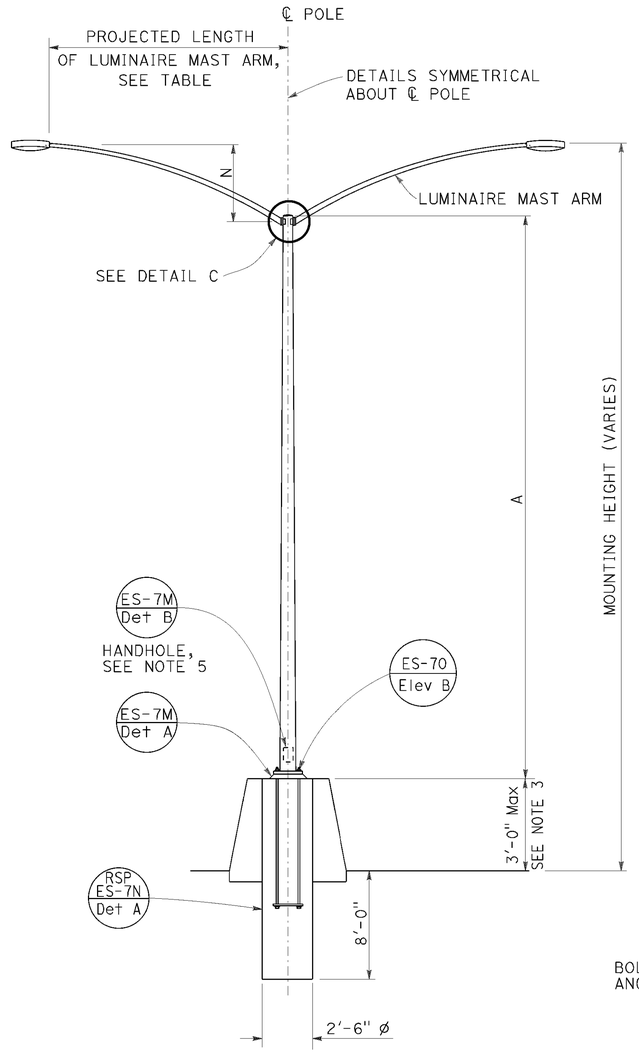


TYPE 15D AND TYPE 21D
MEDIAN BARRIER MOUNTED
ELEVATION B

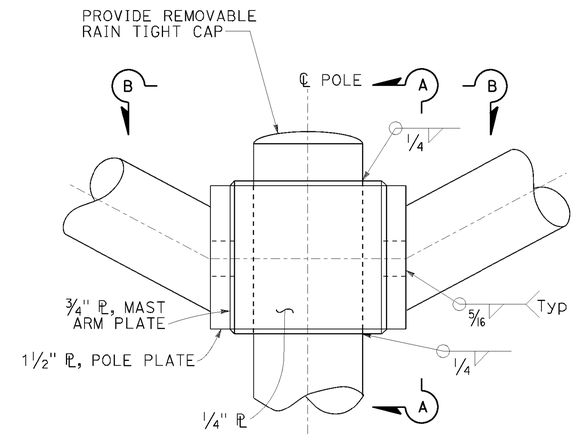


DETAIL C

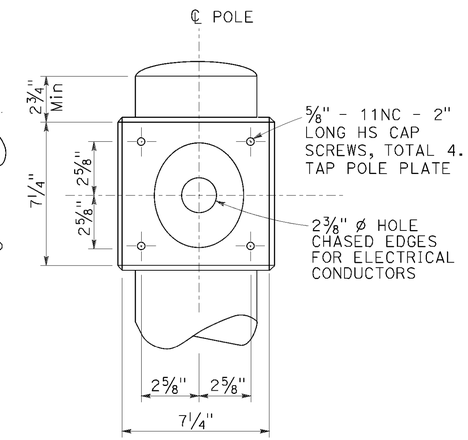


SECTION A-A

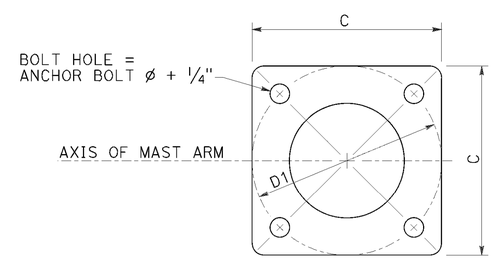


BASE PLATE
DETAIL B

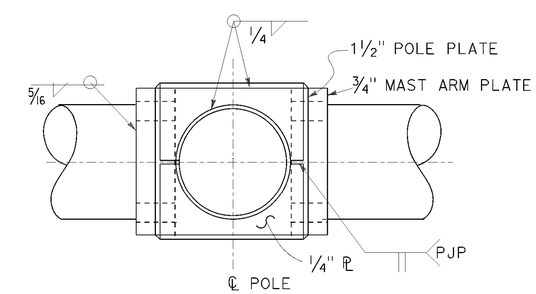


SECTION B-B

| POLE TYPE | POLE DATA | | | | BASE PLATE DATA | | | |
|---|---|---|---|---|---|---|---|---|
| | A HEIGHT | Min OD BASE | Min OD TOP | Min THICKNESS | C | BC = BOLT CIRCLE | THICKNESS | ANCHOR BOLT SIZE |
| 15D | 30'-0" | 8" | 3 11/16" | 0.1793" | 1'-0" | 1'-0" | 2" | 1 1/4" ø x 42" |
| 21D | 35'-0" | 8 5/8" | 3 9/16" | | | | | |

| LUMINAIRE MAST ARM DATA | | | | | |
|---|---|---|---|---|---|
| PROJECTED LENGTH | N RISE | Min OD AT POLE | NOMINAL THICKNESS | P TYPE 15D | P TYPE 21D |
| 6'-0" | 2'-0"± | 3 1/4" | 0.1196" | 31'-6"± | 36'-6"± |
| 8'-0" | 2'-6"± | 3 1/2" | | 32'-0"± | 37'-0"± |
| 10'-0" | 3'-3"± | 3 7/8" | | 32'-9"± | 37'-9"± |
| 12'-0" | 4'-3"± | | | 33'-9"± | 38'-9"± |

STATE OF CALIFORNIA
DEPARTMENT OF TRANSPORTATION

# ELECTRICAL SYSTEMS (LIGHTING STANDARD, TYPES 15D AND 21D, DOUBLE LUMINAIRE MAST ARM)

NO SCALE

RSP ES-6D DATED OCTOBER 30, 2015 SUPERSEDES STANDARD PLAN ES-6D DATED MAY 20, 2011 - PAGE 455 OF THE STANDARD PLANS BOOK DATED 2010.

**REVISED STANDARD PLAN RSP ES-6D**

**2010 REVISED STANDARD PLAN RSP ES-6D**

DATE PLOTTED => 14-JAN-2016
TIME PLOTTED => 14:33

| DIST | COUNTY | ROUTE | POST MILES TOTAL PROJECT | SHEET NO. | TOTAL SHEETS |
|---|---|---|---|---|---|
| 01 | DN | 102 | 17.4 | 56 | 74 |

Theresa Gabriel
REGISTERED ELECTRICAL ENGINEER

October 30, 2015
PLANS APPROVAL DATE

REGISTERED PROFESSIONAL ENGINEER Theresa Aziz Gabriel No. E15129 Exp. 6-30-16 ELECTRICAL STATE OF CALIFORNIA

*THE STATE OF CALIFORNIA OR ITS OFFICERS OR AGENTS SHALL NOT BE RESPONSIBLE FOR THE ACCURACY OR COMPLETENESS OF SCANNED COPIES OF THIS PLAN SHEET.*

TO ACCOMPANY PLANS DATED 01-11-16

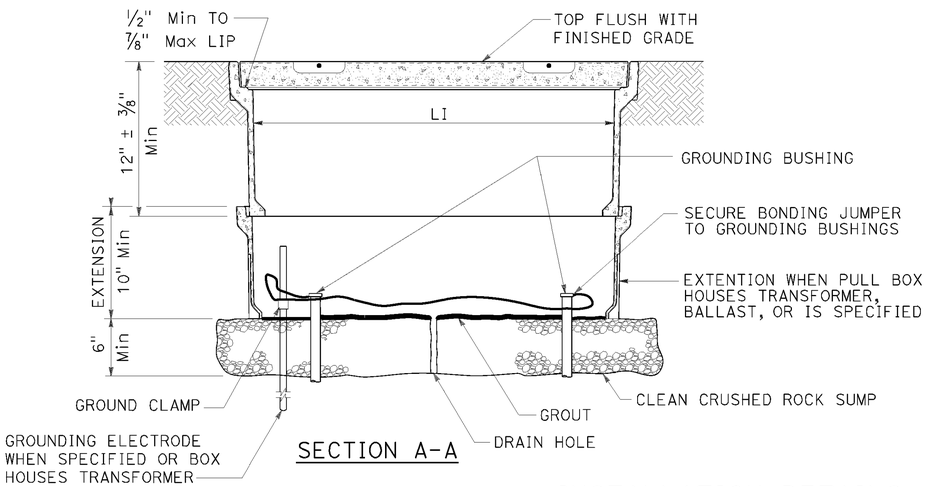


SECTION A-A

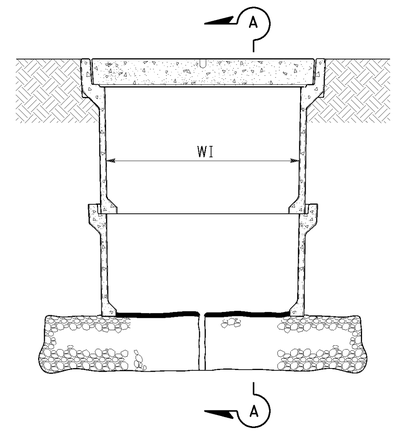


SIDE VIEW

## INSTALLATION DETAILS

### DETAIL A

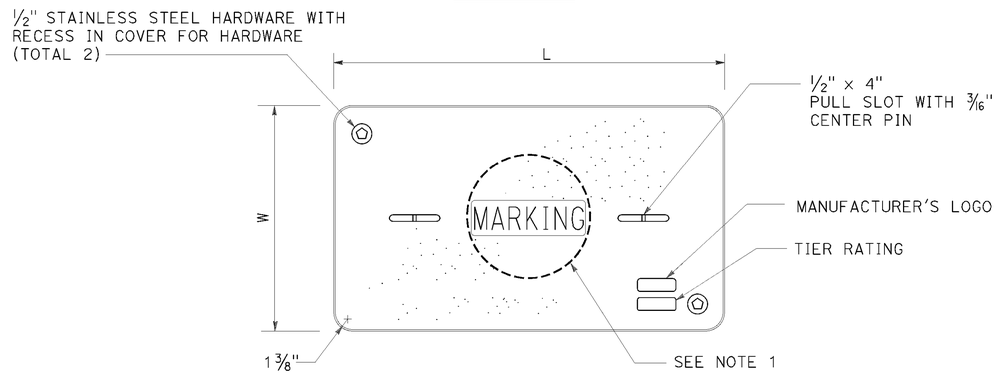


COVER TOP VIEW

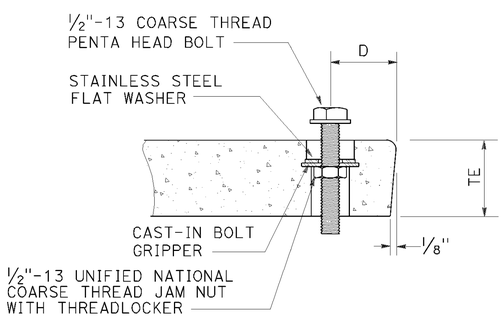


TYPICAL COVER CAPTIVE BOLT

OR SIMILAR

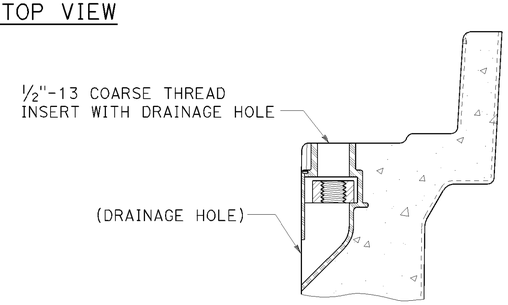


TYPICAL THREADED INSERT

OR SIMILAR

## NOTES:

1. Pull box covers shall be marked as follows: "SERVICE" Service circuits between service point and service disconnect; "SPRINKLER-CONTROL" sprinkler control circuits, 50 V or less; "CALTRANS" on all pull boxes, except pull boxes marked "SPRINKLER-CONTROL"; and "TELEPHONE" Telephone service;
   - A) No. 3½ pull box.
     - 1) "SIGNAL" - Traffic signal circuits with or without lighting or sign lighting circuits.
     - 2) "LIGHTING" - Lighting or sign lighting circuits where voltage is under 600 V.
   - B) No. 5, 6, 9 or 9A pull box.
     - 1) "TRAFFIC SIGNAL" - Traffic signal circuits with or without lighting or sign lighting circuits.
     - 2) "LIGHTING" - Lighting or sign lighting circuits where voltage is under 600 V.
     - 3) "LIGHTING-HIGH VOLTAGE" - Lighting or sign lighting circuits where voltage is above 600 V.
     - 4) "IRRIGATION" - Circuits to irrigation controller 120 V or more.
     - 5) "RAMP METER" - Ramp meter circuits.
     - 6) "COUNT STATION" - Count or speed monitor circuits.
     - 7) "COMMUNICATIONS" - Communication circuits.
     - 8) "TOS COMMUNICATIONS" - TOS communication line.
     - 9) "TOS POWER" - TOS power.
     - 10) "TDC POWER" - Telephone demarcation cabinet power.
     - 11) "CCTV" - Closed circuit television circuits.
     - 12) "TMS" - Traffic monitoring station circuits.
     - 13) "CMS" - Changeable message sign circuits.
     - 14) "HAR" - Highway advisory radio circuits.
     - 15) "BOOSTER PUMP" - Booster pump circuit.
2. The nominal dimensions of the opening in which the cover sets shall be the same as the cover dimensions except the length and width dimensions shall be ⅛" greater.
3. Covers and boxes shall be interchangeable with California standard male and female gages. When interchanged with a standard male or female gage, the top surfaces shall be flush within ⅛". Top outside radius of covers and pull boxes shall have a ⅛" radius.
4. Pull box extension may be another pull box as long as the bottom edge of the pull box can fit into the cover opening.
5. Dimensions for the cover for non-traffic pull box are nominal values.

DIMENSION TABLE

| PULL BOX | PULL BOX | | | | | COVER | | | | |
|---|---|---|---|---|---|---|---|---|---|---|
| | MINIMUM DEPTH BOX | MINIMUM DEPTH EXTENSION | MINIMUM WEIGHT | LI Min | WI Min | TE | D | L | W | MINIMUM WEIGHT |
| No. 3½ | 12" | N/A | 40 lb | 1' - 3" | 9" | 1¾" | 1¾" | 1'-3¼" - 1'-3⅜" | 10" - 10⅛" | 30 lb |
| No. 5 | 12" | 10" | 55 lb | 1' - 8" | 11" | 2" | 1¾" | 1'-11¼" | 1'-1¾" | 60 lb |
| No. 6 | 12" | 10" | 70 lb | 2' - 4¼" | 1' - 3¼" | 2" | 2" | 2'-6½" | 1'-5½" | 85 lb |

STATE OF CALIFORNIA
DEPARTMENT OF TRANSPORTATION

# ELECTRICAL SYSTEMS (NON-TRAFFIC PULL BOX)

NO SCALE

RSP ES-8A DATED OCTOBER 30, 2015 SUPERSEDES RSP ES-8A DATED JULY 19, 2013 AND RSP ES-8A DATED JANUARY 20, 2012 THAT SUPPLEMENTS THE STANDARD PLANS BOOK DATED 2010.

# REVISED STANDARD PLAN RSP ES-8A

2010 REVISED STANDARD PLAN RSP ES-8A

DATE PLOTTED => 14-JAN-2016
TIME PLOTTED => 14:31

| Dist | COUNTY | ROUTE | POST MILES TOTAL PROJECT | SHEET No. | TOTAL SHEETS |
|---|---|---|---|---|---|
| 01 | DN | 102 | 17.4 | 57 | 74 |

Theresa Gabriel
REGISTERED ELECTRICAL ENGINEER

October 30, 2015
PLANS APPROVAL DATE

REGISTERED PROFESSIONAL ENGINEER
Theresa Aziz Gabriel
No. E15129
Exp. 6-30-16
ELECTRICAL
STATE OF CALIFORNIA

*THE STATE OF CALIFORNIA OR ITS OFFICERS OR AGENTS SHALL NOT BE RESPONSIBLE FOR THE ACCURACY OR COMPLETENESS OF SCANNED COPIES OF THIS PLAN SHEET.*

TO ACCOMPANY PLANS DATED 01-11-16

**NOTE:**
Curves represent the minimum footcandle (FC).

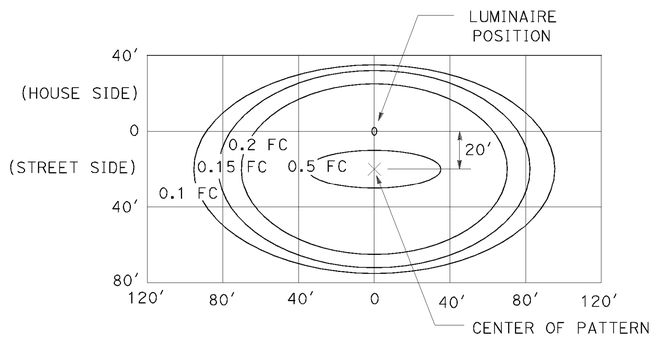


LED LUMINAIRE 165 W
34′ Mounting Height

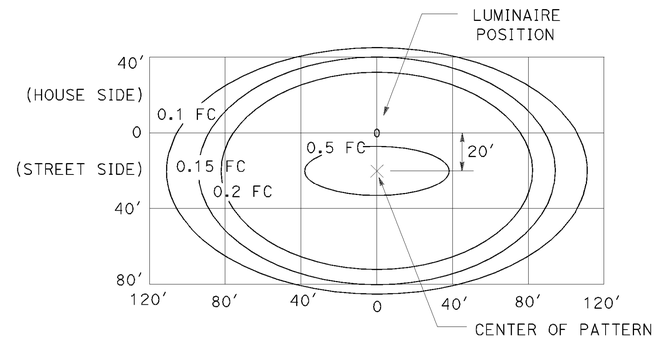


LED LUMINAIRE 235 W
40′ Mounting Height

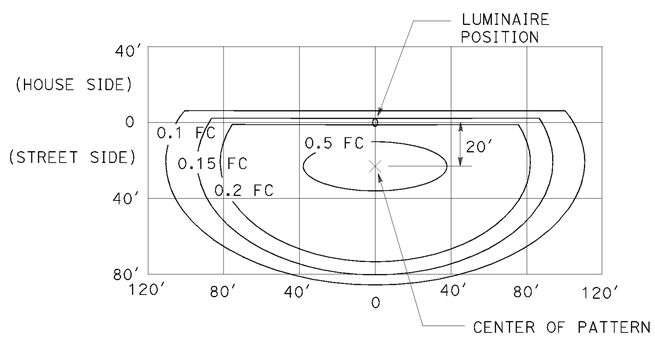


LED LUMINAIRE 235 W
40′ Mounting Height
with back side control

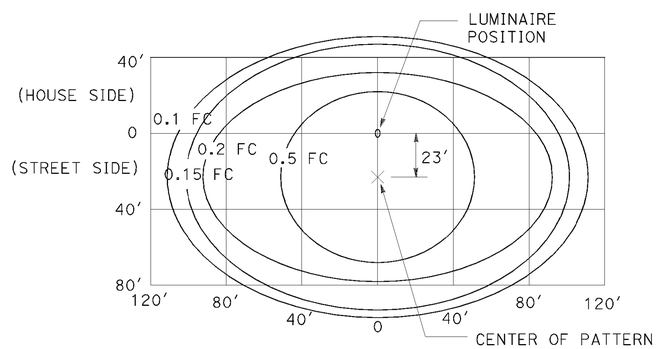


LED LUMINAIRE 300 W
40′ Mounting Height

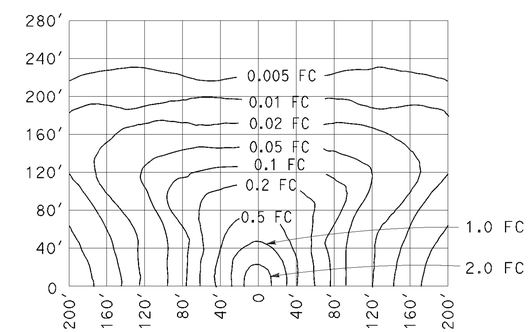


LOW-PRESSURE SODIUM LUMINAIRE 180 W
40′ Mounting Height
Lamp operated at 33,000 lm

STATE OF CALIFORNIA
DEPARTMENT OF TRANSPORTATION

# ELECTRICAL SYSTEMS (ISOFOOTCANDLE CURVES)

NO SCALE

RSP ES-10A DATED OCTOBER 30, 2015 SUPERSEDES RSP ES-10A DATED JULY 19, 2013 THAT SUPPLEMENTS THE STANDARD PLANS BOOK DATED 2010.

**REVISED STANDARD PLAN RSP ES-10A**

**2010 REVISED STANDARD PLAN RSP ES-10A**

DATE PLOTTED => 14-JAN-2016
TIME PLOTTED => 14:31

| Dist | COUNTY | ROUTE | POST MILES TOTAL PROJECT | SHEET No. | TOTAL SHEETS |
|---|---|---|---|---|---|
| 01 | DN | 102 | 17.4 | 58 | 74 |

Theresa Gabriel
REGISTERED ELECTRICAL ENGINEER

October 30, 2015
PLANS APPROVAL DATE

REGISTERED PROFESSIONAL ENGINEER
Theresa Aziz Gabriel
No. E15129
Exp. 6-30-16
ELECTRICAL
STATE OF CALIFORNIA

*THE STATE OF CALIFORNIA OR ITS OFFICERS OR AGENTS SHALL NOT BE RESPONSIBLE FOR THE ACCURACY OR COMPLETENESS OF SCANNED COPIES OF THIS PLAN SHEET.*

TO ACCOMPANY PLANS DATED 01-11-16

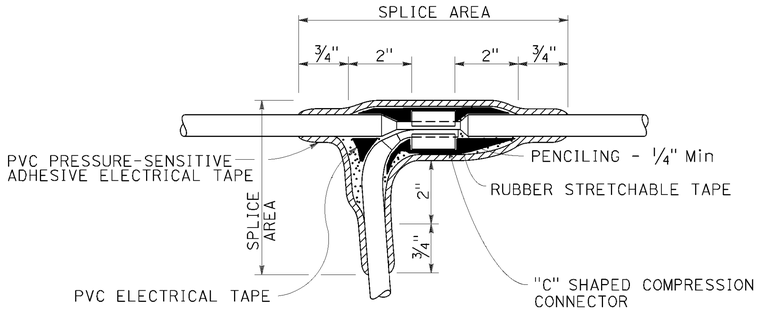


## TYPE C SPLICE

See Note 3

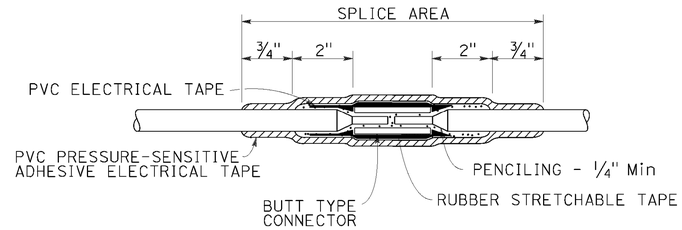


## TYPE S SPLICE

See Note 4

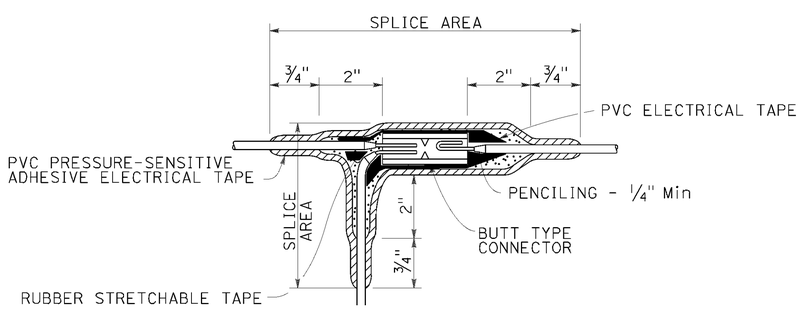


## TYPE ST SPLICE

See Note 5

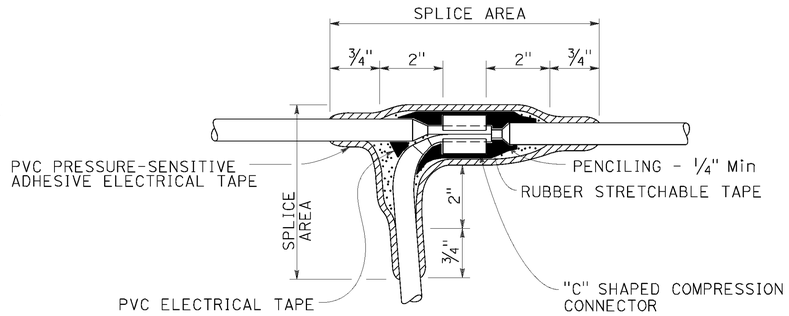


## TYPE T SPLICE

See Note 5

NOTES:

1. Dimensions are minimum.
2. Rubber tapes shall be rolled after application.
3. Between 1 free-end and 1 through conductor.
4. Between 2 free-end conductors.
5. Between 3 free-end conductors.

STATE OF CALIFORNIA
DEPARTMENT OF TRANSPORTATION

# ELECTRICAL SYSTEMS (SPLICING DETAILS)

NO SCALE

RSP ES-13A DATED OCTOBER 30, 2015 SUPERSEDES STANDARD PLAN ES-13A DATED MAY 20, 2011 - PAGE 491 OF THE STANDARD PLANS BOOK DATED 2010.

**REVISED STANDARD PLAN RSP ES-13A**

**2010 REVISED STANDARD PLAN RSP ES-13A**

DATE PLOTTED => 14-JAN-2016
TIME PLOTTED => 14:32

| DIST | COUNTY | ROUTE | POST MILES TOTAL PROJECT | SHEET No. | TOTAL SHEETS |
|---|---|---|---|---|---|
| 01 | DN | 101 | 17.4 | 59 | 74 |

Manode Kodsuntie 09-08-15
REGISTERED CIVIL ENGINEER DATE

January 11, 2016
PLANS APPROVAL DATE

REGISTERED PROFESSIONAL ENGINEER Manode Kodsuntie No. 56671 Exp. 6-30-17 CIVIL STATE OF CALIFORNIA

*The State of California or its officers or agents shall not be responsible for the accuracy or completeness of scanned copies of this plan sheet.*

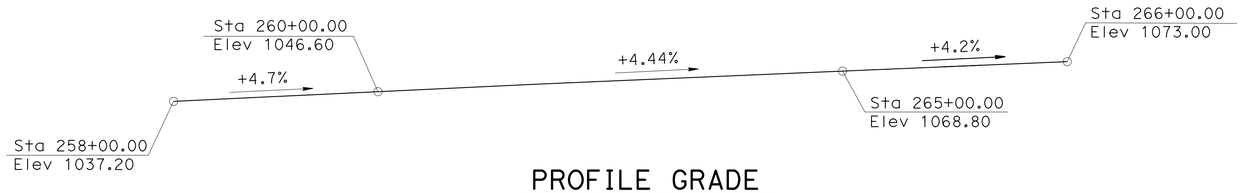


## PROFILE GRADE

NO SCALE

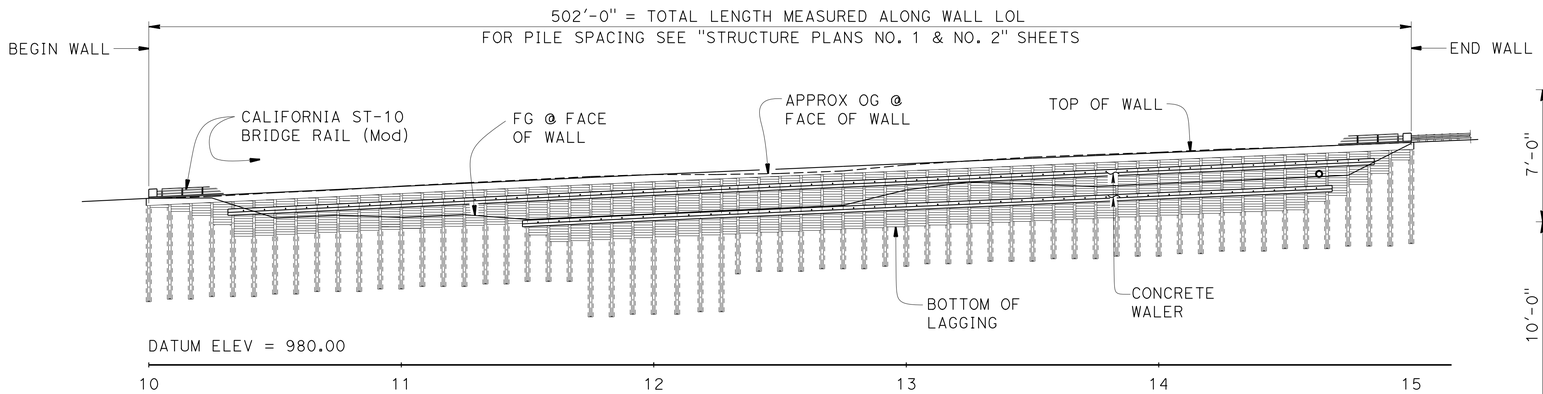


QUANTITIES

| | | |
|---|---|---|
| STRUCTURE EXCAVATION (SOLDIER PILE WALL) | 1,855 | CY |
| STRUCTURE BACKFILL (SOLDIER PILE WALL) | 673 | CY |
| CONCRETE BACKFILL (SOLDIER PILE WALL) | 168 | CY |
| LEAN CONCRETE BACKFILL | 132 | CY |
| GROUND ANCHOR (SUBHORIZONTAL) | 92 | EA |
| STEEL SOLDIER PILE (HP 12 X 84) | 2,545 | LF |
| 24" DRILLED HOLE | 2,561 | LF |
| STRUCTURAL CONCRETE, BARRIER SLAB | 392 | CY |
| STRUCTURAL CONCRETE, WALER | 164 | CY |
| BAR REINFORCING STEEL (EPOXY COATED) (WALER) | 31,418 | LB |
| TIMBER LAGGING | 54 | MFBM |
| CLEAN AND PAINT STEEL SOLDIER PILING | LUMP | SUM |
| CALIFORNIA ST-10 BRIDGE RAIL (MODIFIED) | 502 | LF |

## MIRRORED ELEVATION

1" = 30'

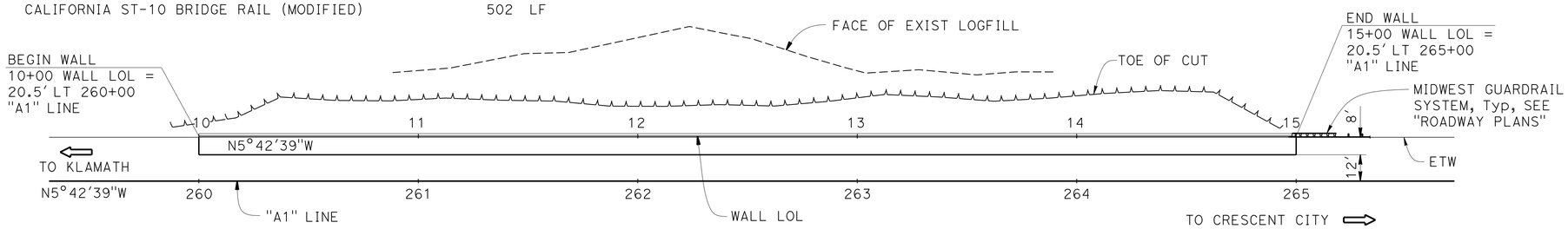


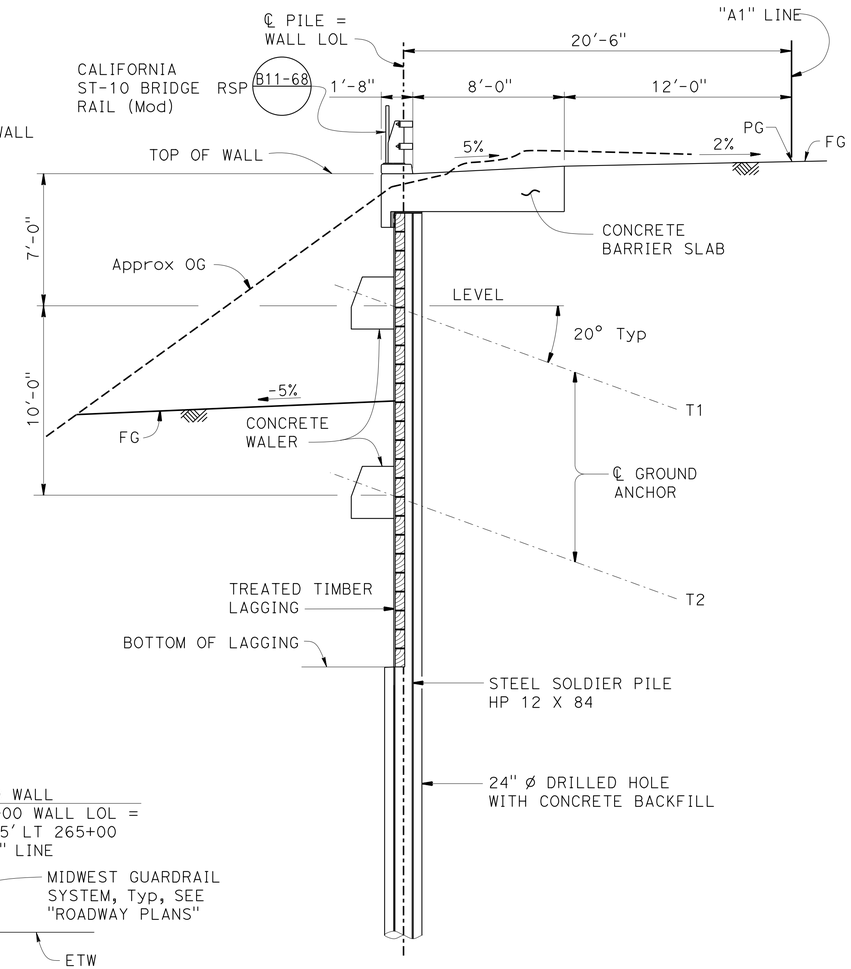


## TYPICAL SECTION

1/4" = 1'-0"

## PLAN

1" = 30'

NOTE: For "INDEX TO PLANS", "GENERAL NOTES" and "QUANTITIES", see "INDEX TO PLANS" sheet.

| | | | | | |
|---|---|---|---|---|---|
| Jeff Sims<br>DESIGN ENGINEER | DESIGN | BY M. Kodsuntie / J. Jung | CHECKED Eric Watson | LOAD & RESISTANCE FACTOR DESIGN | LIVE LOADING: 240psf |
| | DETAILS | BY B. Huddleston / J. Zhou | CHECKED Eric Watson | LAYOUT | BY M. Kodsuntie / J. Jung — CHECKED Eric Watson |
| | QUANTITIES | BY Daniel Sessions | CHECKED Gerald Dickerson | SPECIFICATIONS | BY Michael Keteltas — PLANS AND SPECS COMPARED X |

ORIGINAL SCALE IN INCHES FOR REDUCED PLANS 0 1 2 3

STATE OF CALIFORNIA
DEPARTMENT OF TRANSPORTATION

DIVISION OF ENGINEERING SERVICES
STRUCTURE DESIGN
DESIGN BRANCH 1

BRIDGE NO. 01E0016
POST MILE 17.5

# LOG FILL REPAIR WALL
# GENERAL PLAN

UNIT: 3592
PROJECT NUMBER & PHASE: 01120001121
CONTRACT NO.: 01-0B2804

DISREGARD PRINTS BEARING EARLIER REVISION DATES

REVISION DATES: 9-26-13 10/27/15 12/01/15

SHEET 1 OF 16

USERNAME => s132662 DATE PLOTTED => 14-JAN-2016 TIME PLOTTED => 14:32

STRUCTURES DESIGN GENERAL PLAN SHEET (ENGLISH) (REV.09-01-10)

FILE => ifrw-a-gp.dgn

| DIST | COUNTY | ROUTE | POST MILES TOTAL PROJECT | SHEET No. | TOTAL SHEETS |
|---|---|---|---|---|---|
| 01 | DN | 101 | 17.4 | 60 | 74 |

Manade Kadsuntie 09-08-15
REGISTERED CIVIL ENGINEER DATE

January 11, 2016
PLANS APPROVAL DATE

REGISTERED PROFESSIONAL ENGINEER
Manade Kadsuntie
No. 56671
Exp. 6-30-17
CIVIL
STATE OF CALIFORNIA

*The State of California or its officers or agents shall not be responsible for the accuracy or completeness of scanned copies of this plan sheet.*

# GENERAL NOTES

## LOAD AND RESISTANCE FACTOR DESIGN

DESIGN: AASHTO LRFD Bridge Design Specifications, 4th edition and the California Amendments Preface dated November 2011

LIVE LOAD: 2 feet Level Earth Surcharge

SOIL PARAMETERS: (For determination of design lateral earth pressures)
$\phi = 32°$ $\gamma = 120$ pcf $c = 0$

SEISMIC LOADING: Horizontal coefficient ($k_h$) = 0.2
Vertical seismic coefficient ($k_v$) = 0.0

STEEL SOLDIER PILES: Grade 50 Min

REINFORCED CONCRETE: f'c = 3.6 ksi
fy = 60 ksi n = 8

STRUCTURAL TIMBER: Treated Douglas Fir, Grade No. 1 or better
Timber to be full sawn

PRESTRESSING STEEL (GROUND ANCHORS): FDL = Factored Design Load on ground anchor (kips)
FTL = Factored Test Load (kips)
LL = Lock-Off Load (kips)

fpu = Minimum ultimate tensile strength of Ground Anchor steel (ksi)

As (Min) = Minimum cross sectional area of steel in Ground Anchor (square inches)

$$As\ (Min) = \frac{1.0\ FTL}{0.75\ fpu}$$

| Load | Wall Location With One Row of Ground Anchor | Wall Location With Two Rows of Ground Anchors | |
|---|---|---|---|
| | T1 | T1 | T2 |
| FDL | 136 | 136 | 128 |
| FTL | 136 | 136 | 128 |
| LL | 75 | 75 | 70 |

# INDEX TO PLANS


| SHEET NO. | TITLE |
|---|---|
| 1. | GENERAL PLAN |
| 2. | INDEX TO PLANS |
| 3. | FOUNDATION PLAN |
| 4. | STRUCTURE PLAN NO. 1 |
| 5. | STRUCTURE PLAN NO. 2 |
| 6. | TYPICAL SECTION |
| 7. | SOLDIER PILE WALL WITH WALERS - DETAILS NO. 1 |
| 8. | SOLDIER PILE WALL WITH WALERS - DETAILS NO. 2 |
| 9. | SOLDIER PILE WALL WITH WALERS - DETAILS NO. 3 |
| 10. | GROUND ANCHOR DETAILS |
| 11. | BARRIER RAIL DETAILS |
| 12. | LOG OF TEST BORINGS 1 OF 5 |
| 13. | LOG OF TEST BORINGS 2 OF 5 |
| 14. | LOG OF TEST BORINGS 3 OF 5 |
| 15. | LOG OF TEST BORINGS 4 OF 5 |
| 16. | LOG OF TEST BORINGS 5 OF 5 |


# STANDARD PLANS DATED 2010

| | | |
|---|---|---|
| | A10A | ABBREVIATIONS (SHEET 1 OF 2) |
| RSP | A10B | ABBREVIATIONS (SHEET 2 OF 2) |
| | A10C | LINES AND SYMBOLS (SHEET 1 OF 3) |
| | A10D | LINES AND SYMBOLS (SHEET 2 OF 3) |
| | A10E | LINES AND SYMBOLS (SHEET 3 OF 3) |
| | A10F | LEGEND - SOIL (SHEET 1 OF 2) |
| | A10G | LEGEND - SOIL (SHEET 2 OF 2) |
| | A10H | LEGEND - ROCK |
| RSP | B11-68 | CALIFORNIA ST-10 BRIDGE RAIL (SHEET 1 OF 3) |
| | B11-69 | CALIFORNIA ST-10 BRIDGE RAIL (SHEET 2 OF 3) |
| RSP | B11-70 | CALIFORNIA ST-10 BRIDGE RAIL (SHEET 3 OF 3) |

STANDARD PLAN SHEET No.

DETAIL No.

| | BY | CHECKED |
|---|---|---|
| DESIGN | Jun Jung | Eric Watson |
| DETAILS | Yingjue Feng | Eric Watson |
| QUANTITIES | Daniel Sessions | Gerald Dickerson |

STATE OF CALIFORNIA
DEPARTMENT OF TRANSPORTATION

DIVISION OF ENGINEERING SERVICES
STRUCTURE DESIGN
DESIGN BRANCH 1

BRIDGE NO. 01E0016
POST MILE 17.5

# LOG FILL REPAIR WALL
# INDEX TO PLANS

STRUCTURES DESIGN DETAIL SHEET (ENGLISH) (REV. 09-01-10)

ORIGINAL SCALE IN INCHES FOR REDUCED PLANS 0 1 2 3

UNIT: 3592
PROJECT NUMBER & PHASE: 01120001121
CONTRACT NO.: 01-0B2804

DISREGARD PRINTS BEARING EARLIER REVISION DATES

REVISION DATES: 11-02-14 04-13-15 07-30-15

SHEET 2 OF 16

FILE => ifrw-a-itp.dgn

USERNAME => s132682 DATE PLOTTED => 14-JAN-2016 TIME PLOTTED => 14:32

| DIST | COUNTY | ROUTE | POST MILES TOTAL PROJECT | SHEET No. | TOTAL SHEETS |
|---|---|---|---|---|---|
| 01 | DN | 101 | 17.4 | 61 | 74 |

Manade Kadsuntie 09-08-15
REGISTERED CIVIL ENGINEER DATE

January 11, 2016
PLANS APPROVAL DATE

REGISTERED PROFESSIONAL ENGINEER
Manade Kadsuntie
No. 56671
Exp. 6-30-17
CIVIL
STATE OF CALIFORNIA

*The State of California or its officers or agents shall not be responsible for the accuracy or completeness of electronic copies of this plan sheet.*

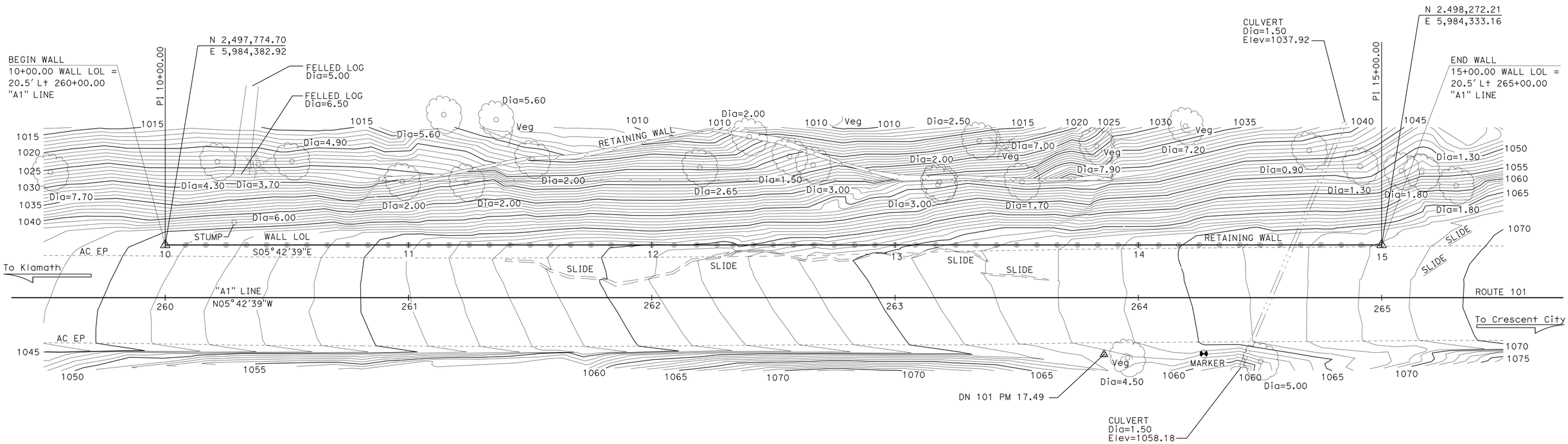


SURVEY CONTROL

DN 101 PM 17.49
Fnd ALCAR (STAMPING: DN 101-17.49 2012)
23.31 Ft Rt "A1" LINE ROUTE 101
Sta 263+85.89
N 2,498,163.16
E 5,984,389.28
Elev = 1062.25

DN 101 PN 17.40 (NOT SHOWN ON PLAN)
Fnd BENCH MARK BRASS DISK (STAMPING: M 1090 1967)
18.97 Ft Rt "A1" LINE ROUTE 101
Sta 258+62.11
N 2,497,641.26
E 5,984,436.96
Elev = 1039.13

LEGEND:

Ⓟ Indicates steel pile in 2'-0" ø hole

PRELIMINARY INVESTIGATION SECTION

| SCALE | VERT.DATUM NAVD88 | PHOTOGRAMMETRY AS OF: X | | | |
|---|---|---|---|---|---|
| 1"=20' | HORZ.DATUM NAD83 (2004.69) | SURVEYED | BY DISTRICT | CHECKED | BY C. FASSETT 01/2014 |
| ALIGNMENT TIES Dist. Traverse Sheet | | DRAFTED | BY T. ZOLNIKOV 01/2014 | CHECKED | BY L. LEW 01/2014 |

| | | |
|---|---|---|
| DESIGN | BY Jun Jung | CHECKED Eric Watson |
| DETAILS | BY Bob Huddleston | CHECKED Eric Watson |
| QUANTITIES | BY Daniel Sessions | CHECKED Gerald Dickerson |

STATE OF CALIFORNIA
DEPARTMENT OF TRANSPORTATION

DIVISION OF ENGINEERING SERVICES
STRUCTURE DESIGN
DESIGN BRANCH 1

BRIDGE NO. 01E0016
POST MILE 17.50

# LOG FILL REPAIR WALL
# FOUNDATION PLAN

STRUCTURES FOUNDATION PLAN SHEET (ENGLISH) (REV. 09-01-10)

ORIGINAL SCALE IN INCHES FOR REDUCED PLANS 0 1 2 3

UNIT: 3646
PROJECT NUMBER & PHASE: 011200001121
CONTRACT NO.: 01-0B2804

DISREGARD PRINTS BEARING EARLIER REVISION DATES

REVISION DATES: 01/11/14 01/30/15 12/07/15

SHEET 3 OF 16

FILE => ifrw-b-fpl.dgn

USERNAME => s132662 DATE PLOTTED => 14-JAN-2016 TIME PLOTTED =>

| DIST | COUNTY | ROUTE | POST MILES TOTAL PROJECT | SHEET No. | TOTAL SHEETS |
|---|---|---|---|---|---|
| 01 | DN | 101 | 17.4 | 62 | 74 |

Manode Kadsuntie 09-08-15
REGISTERED CIVIL ENGINEER DATE

January 11, 2016
PLANS APPROVAL DATE

REGISTERED PROFESSIONAL ENGINEER
Manode Kadsuntie
No. 56671
Exp. 6-30-17
CIVIL
STATE OF CALIFORNIA

*The State of California or its officers or agents shall not be responsible for the accuracy or completeness of scanned copies of this plan sheet.*

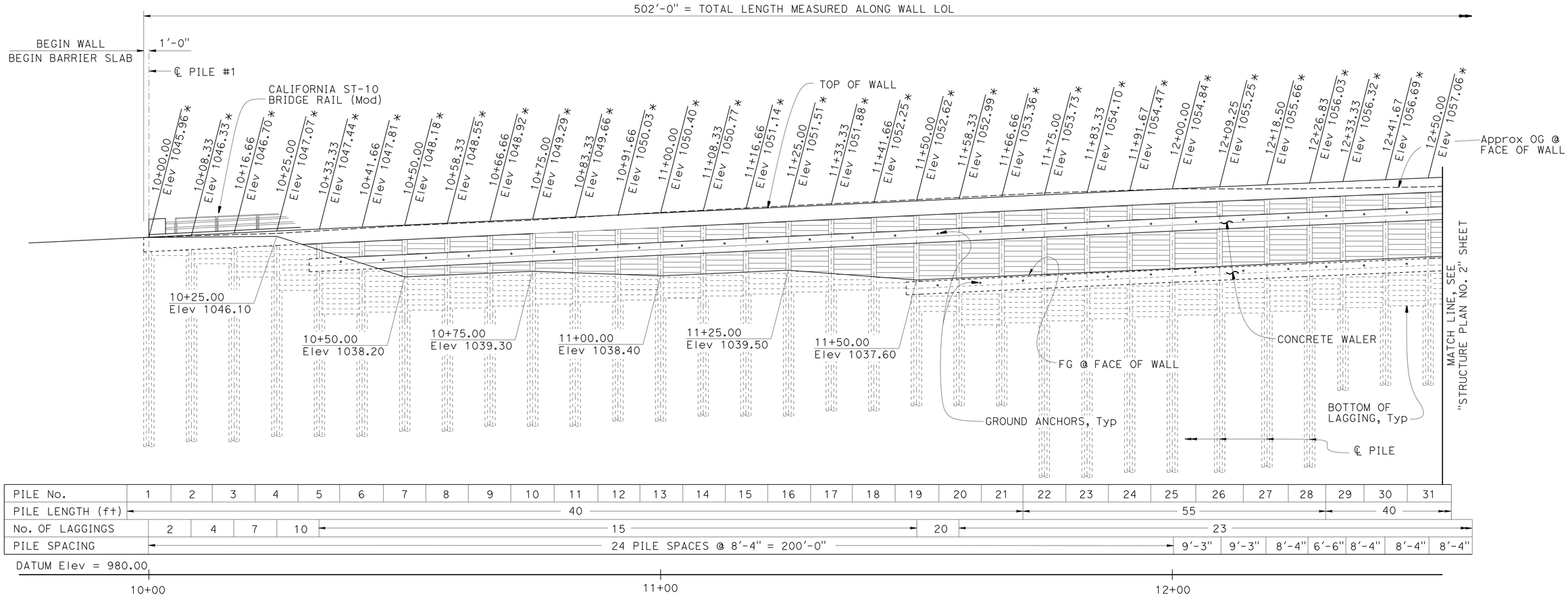


## MIRRORED ELEVATION

1" = 10'

LEGEND:
* - Indicates Top of Wall elevation

| | BY | CHECKED |
|---|---|---|
| DESIGN | Jun Jung | Eric Watson |
| DETAILS | Yingjue Feng | Eric Watson |
| QUANTITIES | Daniel Sessions | Gerald Dickerson |

STATE OF CALIFORNIA
DEPARTMENT OF TRANSPORTATION

DIVISION OF ENGINEERING SERVICES
STRUCTURE DESIGN
DESIGN BRANCH 1

BRIDGE NO. 01E0016
POST MILE 17.5

# LOG FILL REPAIR WALL
# STRUCTURE PLAN NO. 1

STRUCTURES DESIGN DETAIL SHEET (ENGLISH) (REV. 09-01-10)

ORIGINAL SCALE IN INCHES FOR REDUCED PLANS 0 1 2 3

UNIT: 3592
PROJECT NUMBER & PHASE: 01120001121
CONTRACT NO.: 01-0B2804

DISREGARD PRINTS BEARING EARLIER REVISION DATES

REVISION DATES: 01-08-15 09/08/15 01-30-15

SHEET 4 OF 16

FILE => ifrw-c-str01.dgn

USERNAME => s132662 DATE PLOTTED => 14-JAN-2016 TIME PLOTTED => 14:32

| DIST | COUNTY | ROUTE | POST MILES TOTAL PROJECT | SHEET No. | TOTAL SHEETS |
|---|---|---|---|---|---|
| 01 | DN | 101 | 17.4 | 63 | 74 |

Manode Kadsuntie 09-08-15
REGISTERED CIVIL ENGINEER DATE

January 11, 2016
PLANS APPROVAL DATE

REGISTERED PROFESSIONAL ENGINEER
Manode Kadsuntie
No. 56671
Exp. 6-30-17
CIVIL
STATE OF CALIFORNIA

*The State of California or its officers or agents shall not be responsible for the accuracy or completeness of scanned copies of this plan sheet.*

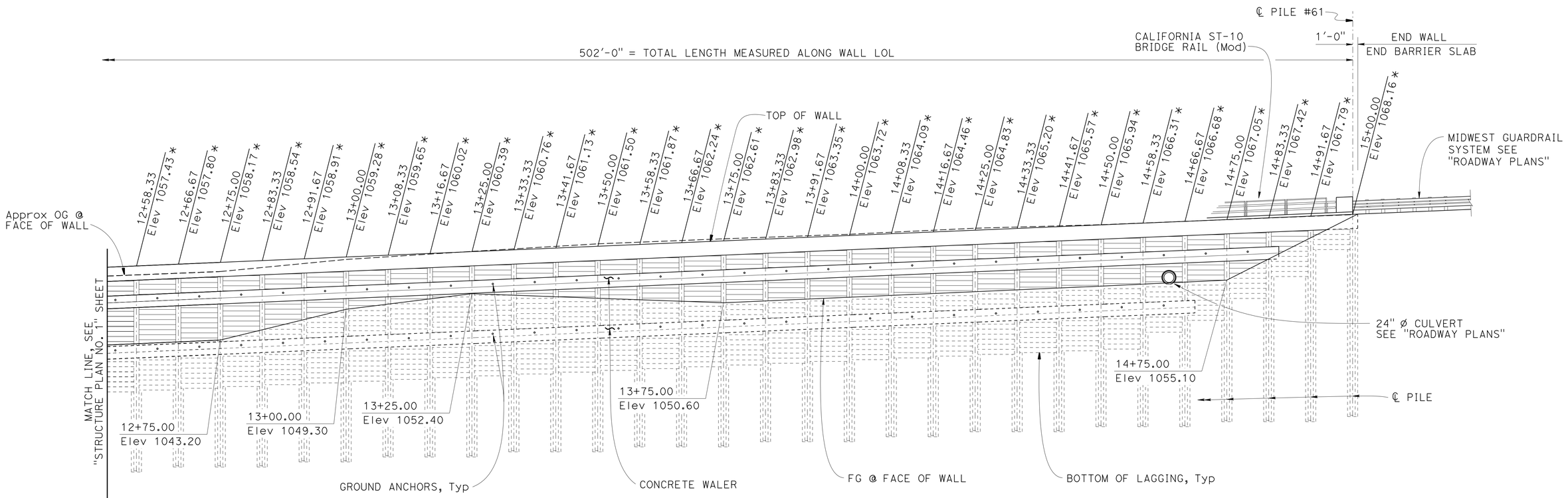


| PILE No. | 32 | 33 | 34 | 35 | 36 | 37 | 38 | 39 | 40 | 41 | 42 | 43 | 44 | 45 | 46 | 47 | 48 | 49 | 50 | 51 | 52 | 53 | 54 | 55 | 56 | 57 | 58 | 59 | 60 | 61 |
|---|---|---|---|---|---|---|---|---|---|---|---|---|---|---|---|---|---|---|---|---|---|---|---|---|---|---|---|---|---|---|
| PILE LENGTH (ft) | 40 | | | | | | | | | | | | | | | | | | | | | | | | | | | | | |
| No. OF LAGGINGS | 23 | | | | | | | | | | | | | | | | | | | | | | | | 20 | 18 | 14 | 10 | 5 | |
| PILE SPACING | 29 PILE SPACES @ 8'-4" = 241'-8" | | | | | | | | | | | | | | | | | | | | | | | | | | | | | |

DATUM Elev = 980.00

13+00 14+00 15+00

LEGEND:
* - Indicates Top of Wall elevation

## MIRRORED ELEVATION

1" = 10'

| | BY | CHECKED |
|---|---|---|
| DESIGN | Jun Jung | Eric Watson |
| DETAILS | Yingjue Feng | Eric Watson |
| QUANTITIES | Daniel Sessions | Gerald Dickerson |

STATE OF CALIFORNIA
DEPARTMENT OF TRANSPORTATION

DIVISION OF ENGINEERING SERVICES
STRUCTURE DESIGN
DESIGN BRANCH 1

BRIDGE NO. 01E0016
POST MILE 17.5

# LOG FILL REPAIR WALL
# STRUCTURE PLAN NO. 2

STRUCTURES DESIGN DETAIL SHEET (ENGLISH) (REV. 09-01-10)

ORIGINAL SCALE IN INCHES FOR REDUCED PLANS 0 1 2 3

UNIT: 3592
PROJECT NUMBER & PHASE: 01120001121
CONTRACT NO.: 01-0B2804

DISREGARD PRINTS BEARING EARLIER REVISION DATES

REVISION DATES: 09-08-14 01-14-15 04-14-15 04-23-15

SHEET 5 OF 16

FILE => ifrw-c-str02.dgn

USERNAME => s132662 DATE PLOTTED => 14-JAN-2016 TIME PLOTTED => 14:32

| DIST | COUNTY | ROUTE | POST MILES TOTAL PROJECT | SHEET No. | TOTAL SHEETS |
|---|---|---|---|---|---|
| 01 | DN | 101 | 17.4 | 64 | 74 |

Manode Kodsuntie 09-08-15
REGISTERED CIVIL ENGINEER DATE

January 11, 2016
PLANS APPROVAL DATE

REGISTERED PROFESSIONAL ENGINEER
Manode Kodsuntie
No. 56671
Exp. 6-30-17
CIVIL
STATE OF CALIFORNIA

*The State of California or its officers or agents shall not be responsible for the accuracy or completeness of scanned copies of this plan sheet.*

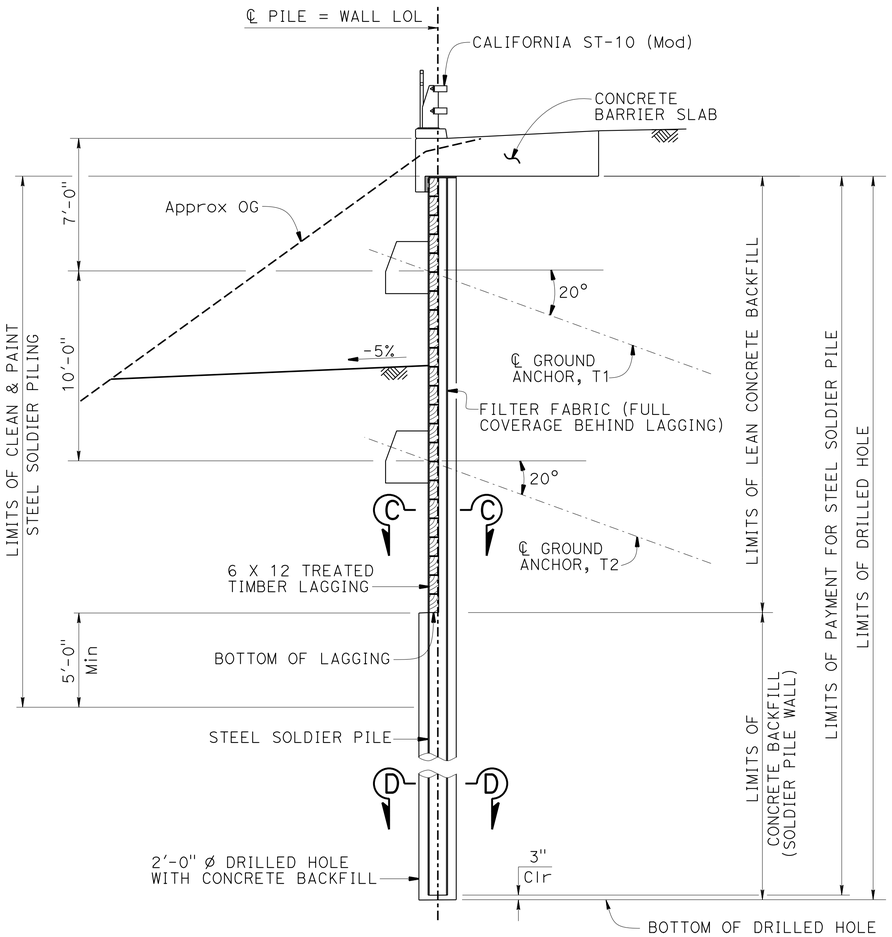


## TYPICAL SECTION

1/4" = 1'-0"

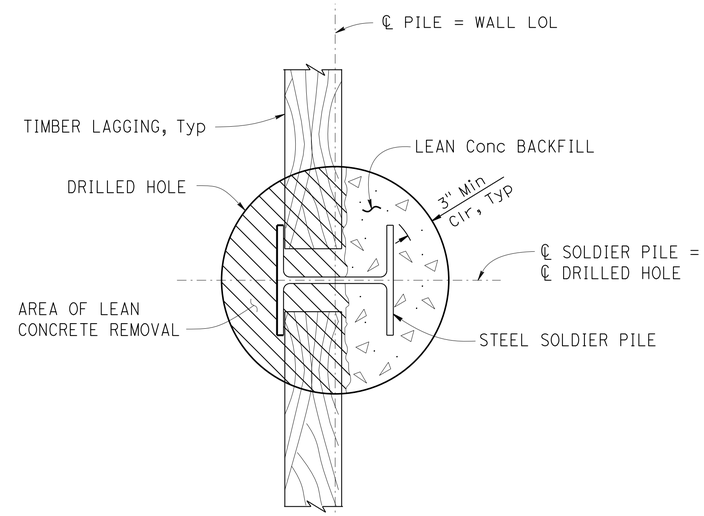


## SECTION C-C

1 1/2"=1'-0"

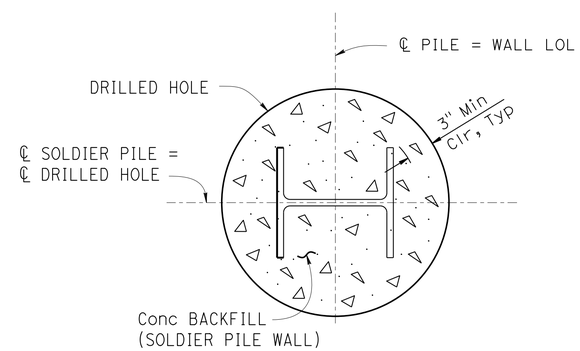


## SECTION D-D

1 1/2"=1'-0"

| | | | |
|---|---|---|---|
| DESIGN | BY Jun Jung | CHECKED Eric Watson | |
| DETAILS | BY Jinrong Zhou | CHECKED Eric Watson | |
| QUANTITIES | BY Daniel Sessions | CHECKED Gerald Dickerson | |

STATE OF CALIFORNIA
DEPARTMENT OF TRANSPORTATION

DIVISION OF ENGINEERING SERVICES
STRUCTURE DESIGN
DESIGN BRANCH 1

BRIDGE NO. 01E0016
POST MILE 17.5

# LOG FILL REPAIR WALL
# TYPICAL SECTION

STRUCTURES DESIGN DETAIL SHEET (ENGLISH) (REV. 09-01-10)

ORIGINAL SCALE IN INCHES FOR REDUCED PLANS 0 1 2 3

UNIT: 3592
PROJECT NUMBER & PHASE: 01120001121
CONTRACT NO.: 01-0B2804

DISREGARD PRINTS BEARING EARLIER REVISION DATES

REVISION DATES: 09-08-14 10/12/15 01-30-16

SHEET 6 OF 16

FILE => ifrw-d-ts.dgn

USERNAME => s132662 DATE PLOTTED => 14-JAN-2016 TIME PLOTTED => 14:32

| DIST | COUNTY | ROUTE | POST MILES TOTAL PROJECT | SHEET No. | TOTAL SHEETS |
|---|---|---|---|---|---|
| 01 | DN | 101 | 17.4 | 65 | 74 |

Manode Kodsuntie 09-08-15
REGISTERED CIVIL ENGINEER DATE

January 11, 2016
PLANS APPROVAL DATE

REGISTERED PROFESSIONAL ENGINEER Manode Kodsuntie No. 56671 Exp. 6-30-17 CIVIL STATE OF CALIFORNIA

*The State of California or its officers or agents shall not be responsible for the accuracy or completeness of scanned copies of this plan sheet.*

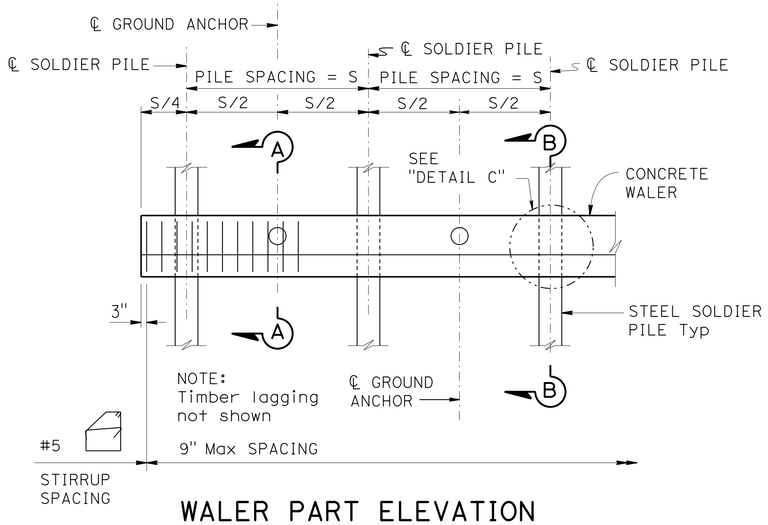


## WALER PART ELEVATION

NO SCALE

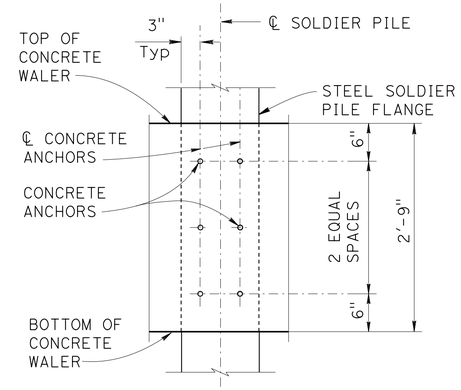


## DETAIL C

1" = 1'-0"

NOTES:

1. For pile spacing and bottom of concrete waler elevation, see "STRUCTURE PLAN NO. 1" and "STRUCTURE PLAN NO. 2" sheets.
2. Concrete waler may be poured to face of lagging.
3. Bearing plates to be recessed.

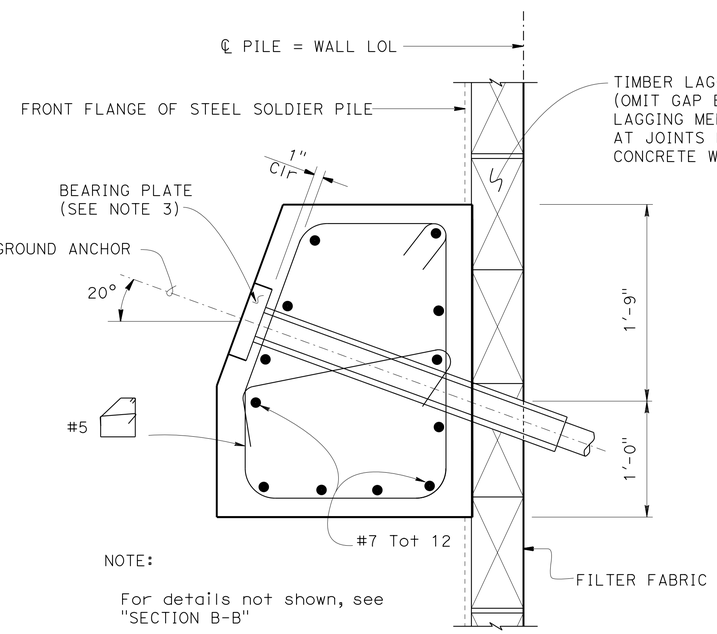


## SECTION A-A

1½" = 1'-0"

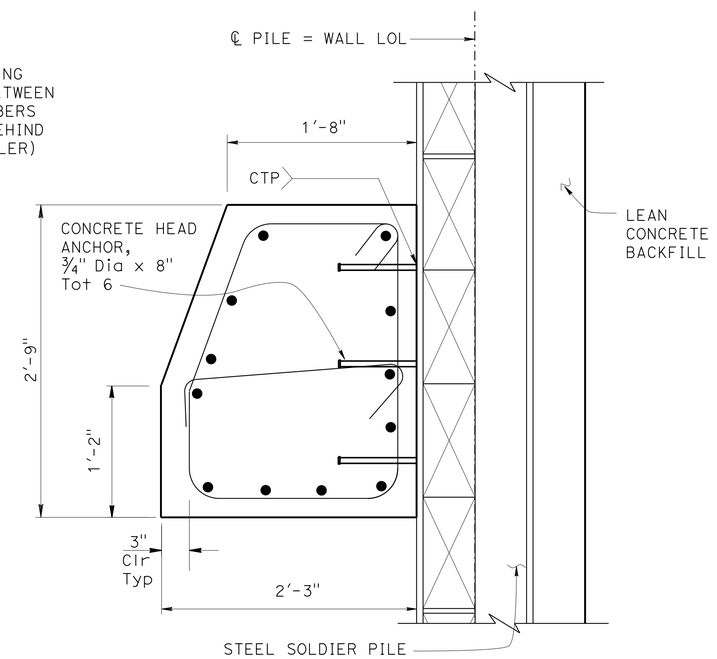


## SECTION B-B

1½" = 1'-0"

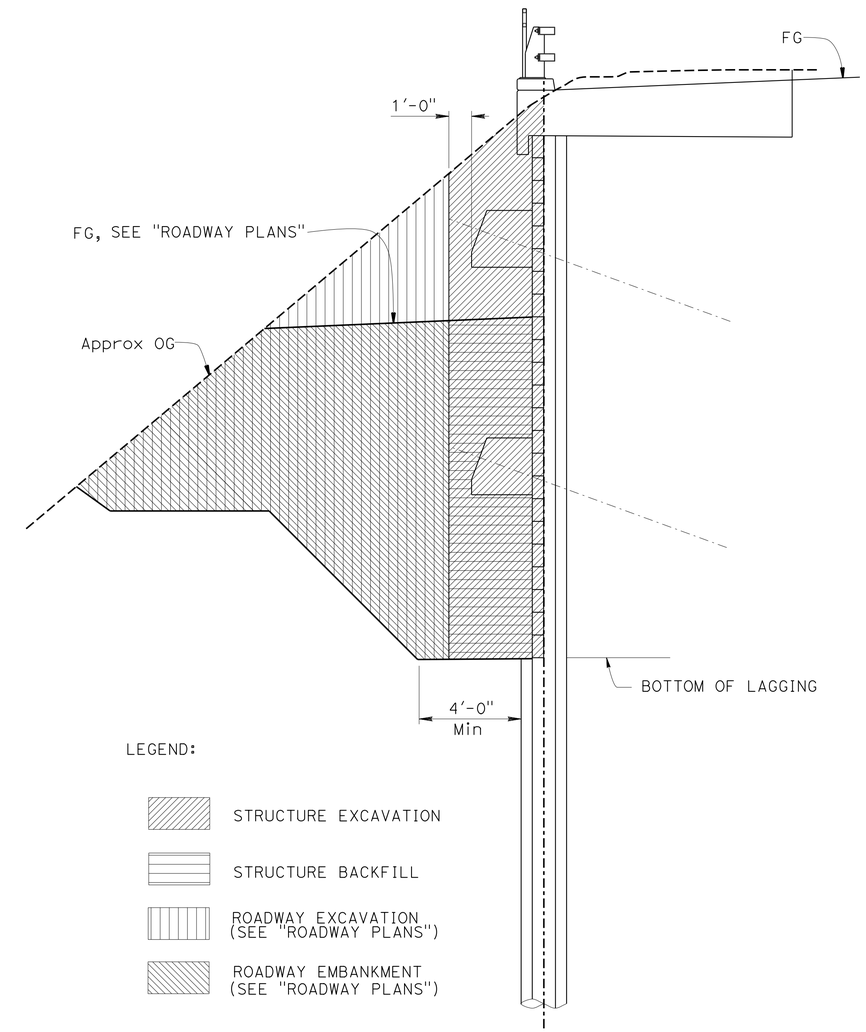


## LIMITS OF PAYMENT FOR EXCAVATION AND BACKFILL

NO SCALE

| | BY | CHECKED |
|---|---|---|
| DESIGN | Jun Jung | Eric Watson |
| DETAILS | Yingjue Feng | Eric Watson |
| QUANTITIES | Daniel Sessions | Gerald Dickerson |

STATE OF CALIFORNIA
DEPARTMENT OF TRANSPORTATION

DIVISION OF ENGINEERING SERVICES
STRUCTURE DESIGN
DESIGN BRANCH 1

BRIDGE NO. 01E0016
POST MILE 17.5

# LOG FILL REPAIR WALL

## SOLDIER PILE WALL WITH WALERS-DETAILS NO. 1

STRUCTURES DESIGN DETAIL SHEET (ENGLISH) (REV. 09-01-10)

ORIGINAL SCALE IN INCHES FOR REDUCED PLANS 0 1 2 3

UNIT: 3592
PROJECT NUMBER & PHASE: 01120001121
CONTRACT NO.: 01-0B2804

DISREGARD PRINTS BEARING EARLIER REVISION DATES

REVISION DATES: 08-08-14 04-14-15 07-30-15

SHEET 7 OF 16

FILE => ifrw-g-walerdt01.dgn

USERNAME => s132662 DATE PLOTTED => 14-JAN-2016 TIME PLOTTED => 14:32

| DIST | COUNTY | ROUTE | POST MILES TOTAL PROJECT | SHEET No. | TOTAL SHEETS |
|---|---|---|---|---|---|
| 01 | DN | 101 | 17.4 | 66 | 74 |

Manode Kadsuntie 09-08-15
REGISTERED CIVIL ENGINEER DATE

January 11, 2016
PLANS APPROVAL DATE

REGISTERED PROFESSIONAL ENGINEER
Manode Kadsuntie
No. 56671
Exp. 6-30-17
CIVIL
STATE OF CALIFORNIA

*The State of California or its officers or agents shall not be responsible for the accuracy or completeness of scanned copies of this plan sheet.*

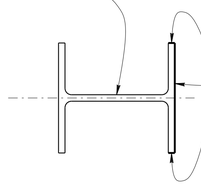


## LIMITS OF CLEAN & PAINT STEEL SOLDIER PILE

1½" = 1'-0"

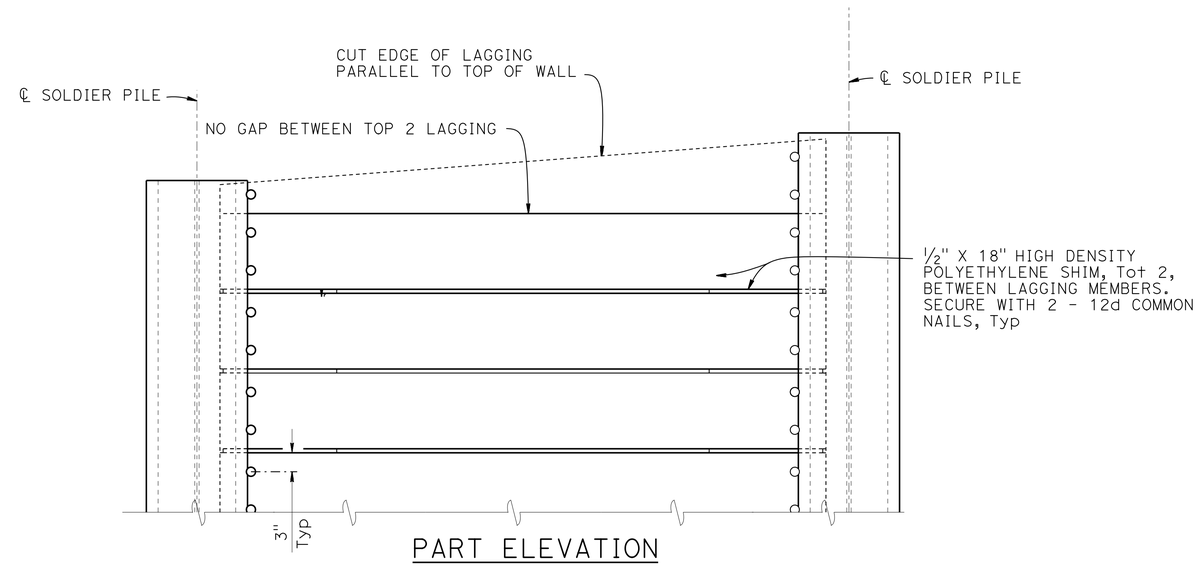


## PART ELEVATION

## LAGGING DETAILS

1" = 1'-0"

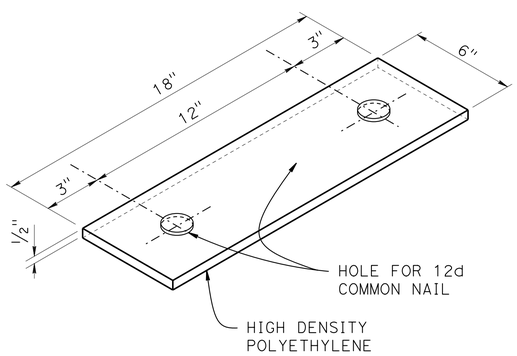


## SHIM DETAIL

3" = 1'-0"

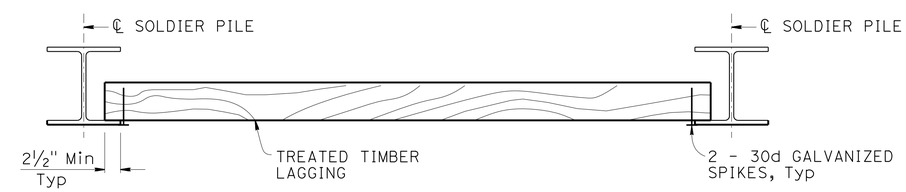


## PART PLAN

1" = 1'-0"

NOTES:

1. No clipping of timber lagging corners allowed.
2. Spikes shall not be bent.

| | | | |
|---|---|---|---|
| DESIGN | BY Jun Jung | CHECKED Eric Watson | |
| DETAILS | BY Loren Goldthwait | CHECKED Eric Watson | |
| QUANTITIES | BY Daniel Sessions | CHECKED Gerald Dickerson | |

STATE OF CALIFORNIA
DEPARTMENT OF TRANSPORTATION

DIVISION OF ENGINEERING SERVICES
STRUCTURE DESIGN
DESIGN BRANCH 1

BRIDGE NO. 01E0016
POST MILE 17.5

# LOG FILL REPAIR WALL

## SOLDIER PILE WALL WITH WALERS-DETAILS NO. 2

STRUCTURES DESIGN DETAIL SHEET (ENGLISH) (REV. 09-01-10)

ORIGINAL SCALE IN INCHES FOR REDUCED PLANS 0 1 2 3

UNIT: 3592
PROJECT NUMBER & PHASE: 01120001121
CONTRACT NO.: 01-0B2804

DISREGARD PRINTS BEARING EARLIER REVISION DATES

REVISION DATES: 08-06-14 07-30-15 04-23-15

SHEET 8 OF 16

FILE => lfrw-g-walerdt02.dgn

USERNAME => s132662 DATE PLOTTED => 14-JAN-2016 TIME PLOTTED => 14:33

| DIST | COUNTY | ROUTE | POST MILES TOTAL PROJECT | SHEET No. | TOTAL SHEETS |
|---|---|---|---|---|---|
| 01 | DN | 101 | 17.4 | 67 | 74 |

Manode Kadsuntie 09-08-15
REGISTERED CIVIL ENGINEER DATE

January 11, 2016
PLANS APPROVAL DATE

REGISTERED PROFESSIONAL ENGINEER Manode Kadsuntie No. 56671 Exp. 6-30-17 CIVIL STATE OF CALIFORNIA

*The State of California or its officers or agents shall not be responsible for the accuracy or completeness of scanned copies of this plan sheet.*

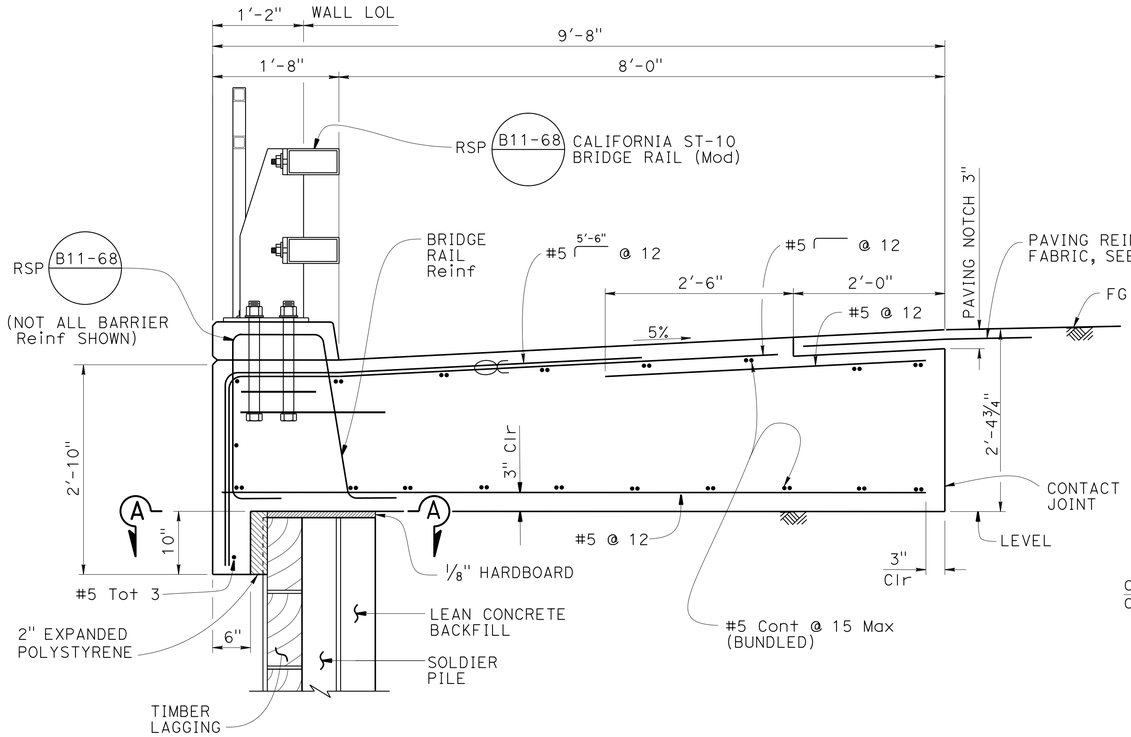


## CONCRETE BARRIER SLAB WITH PAVING NOTCH DETAILS

1" = 1'-0"

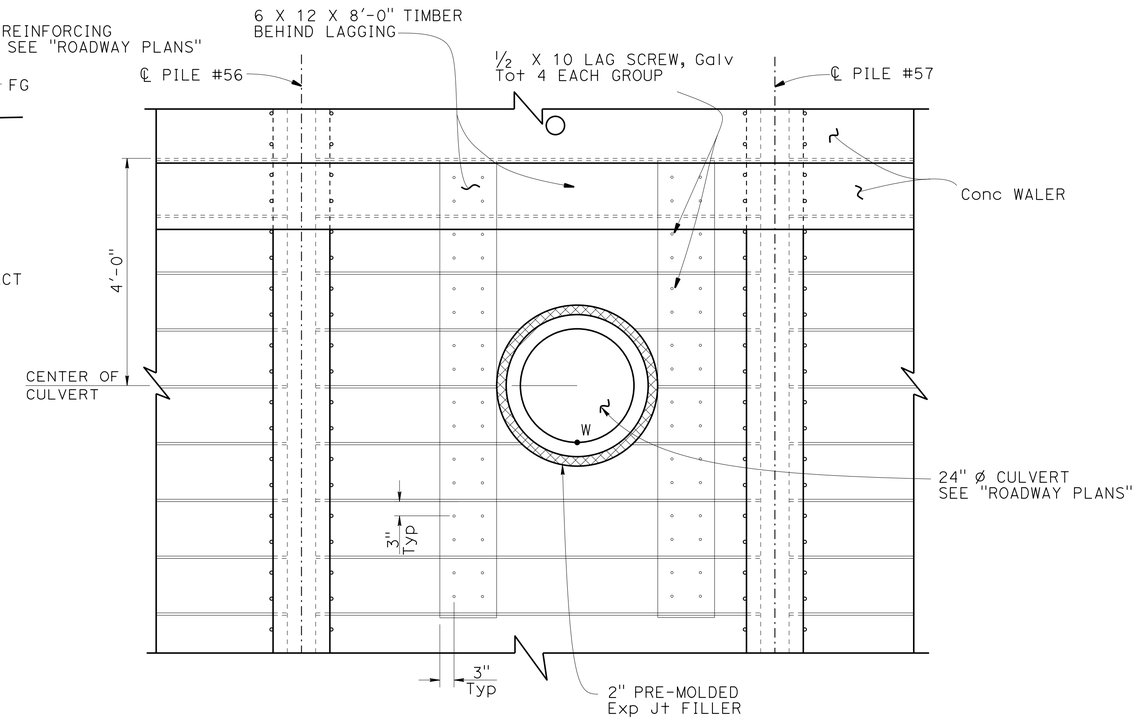


## CULVERT OPENING DETAILS

¾" = 1'-0"

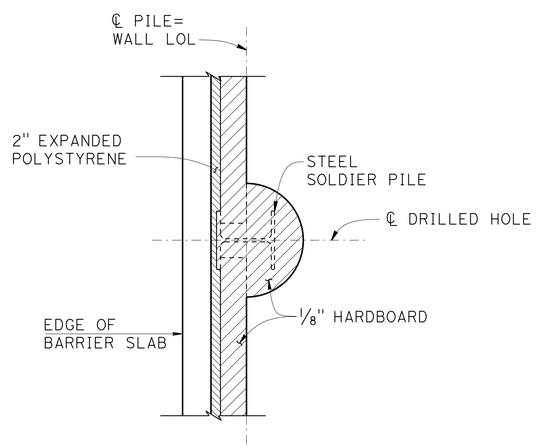


NOTE: Barrier slab reinf not shown

## SECTION A-A

¾" = 1'-0"

NOTE:

1. No expansion joints in barrier slab within wall limits.

LEGEND:

∝ - Indicates bundled bars

| 24" Ø CULVERT | WALL LOL STATION AT "W" | ELEVATION AT "W" AT FACE OF WALL (Ft) |
|---|---|---|
| | 14+63.50 | 1054.60 |

NOTE:
THE CONTRACTOR SHALL VERIFY ALL CONTROLLING FIELD DIMENSIONS BEFORE ORDERING OR FABRICATING ANY MATERIAL.

| | BY | CHECKED |
|---|---|---|
| DESIGN | Jun Jung | Eric Watson |
| DETAILS | J. Zhou/ Y. Feng | Eric Watson |
| QUANTITIES | Daniel Sessions | Gerald Dickerson |

STATE OF CALIFORNIA
DEPARTMENT OF TRANSPORTATION

DIVISION OF ENGINEERING SERVICES
STRUCTURE DESIGN
DESIGN BRANCH 1

BRIDGE NO. 01E0016
POST MILE 17.5

# LOG FILL REPAIR WALL
## SOLDIER PILE WALL WITH WALERS-DETAILS NO.3

STRUCTURES DESIGN DETAIL SHEET (ENGLISH) (REV. 09-01-10)

ORIGINAL SCALE IN INCHES FOR REDUCED PLANS 0 1 2 3

UNIT: 3592
PROJECT NUMBER & PHASE: 01120001121
CONTRACT NO.: 01-0B2804

DISREGARD PRINTS BEARING EARLIER REVISION DATES

REVISION DATES: 09-08-14 04-23-15 04-27-15

SHEET 9 OF 16

FILE => ifrw-g-walerdt03.dgn

USERNAME => s132662 DATE PLOTTED => 14-JAN-2016 TIME PLOTTED => 14:33

| DIST | COUNTY | ROUTE | POST MILES TOTAL PROJECT | SHEET No. | TOTAL SHEETS |
|---|---|---|---|---|---|
| 01 | DN | 101 | 17.4 | 68 | 74 |

Manode Kodsuntie 09-08-15
REGISTERED CIVIL ENGINEER DATE

January 11, 2016
PLANS APPROVAL DATE

REGISTERED PROFESSIONAL ENGINEER Manode Kodsuntie No. 56671 Exp. 6-30-17 CIVIL STATE OF CALIFORNIA

*The State of California or its officers or agents shall not be responsible for the accuracy or completeness of scanned copies of this plan sheet.*

NOTES:

(A) Level of initial grouting for drilled hole 6" in diameter or smaller

(B) Level of secondary grouting

(C) Level of initial grouting inside corrugated sheathing

(D) Bonded length must be determined by the Contractor

NOTES:

1. Anchorage enclosure must only be used when anchor head assembly is not encapsulated in concrete.
2. Anchorage enclosure must have provisions to allow injecting grout at low end and venting at high end. Galvanize after fabrication.
3. Silicone sealant to cover full width of flange.
4. Steel tube (Min thickness = 1/4") welded to bearing plate. Galvanize assembly after fabrication
5. Steel tube welded to bearing plate. Inside diameter of steel tube (Min thickness = 1/4") to be 1" greater than outside diameter of smooth sheathing. Galvanize assembly after fabrication.
6. Permanent concrete enclosure may be used as alternative to grouted enclosures.

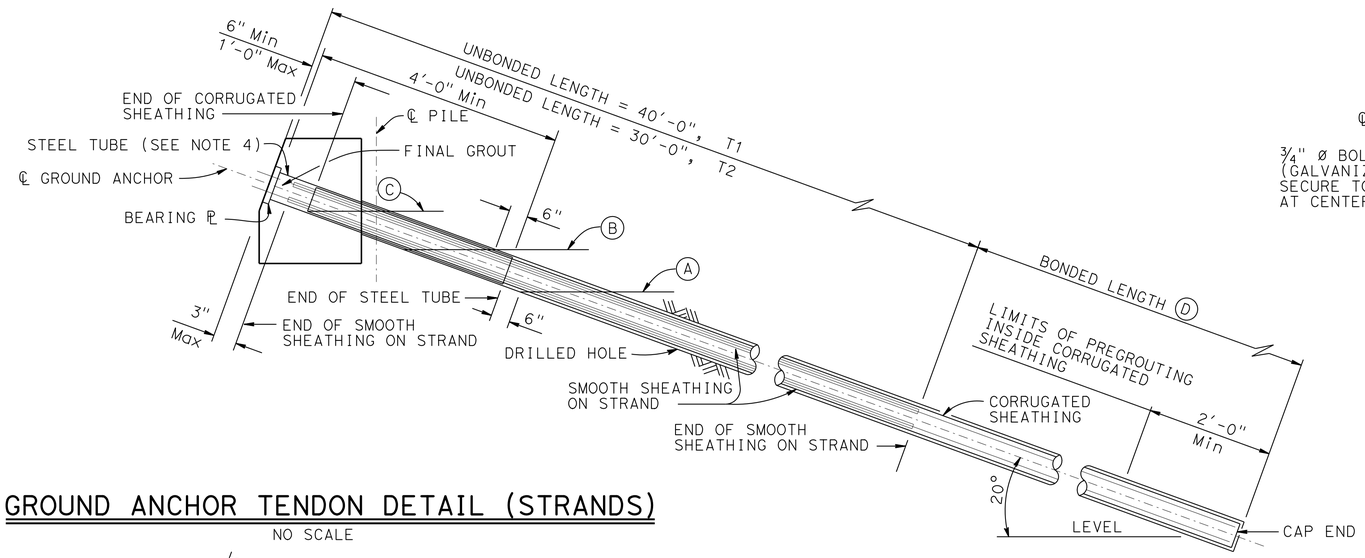


## GROUND ANCHOR TENDON DETAIL (STRANDS)

NO SCALE

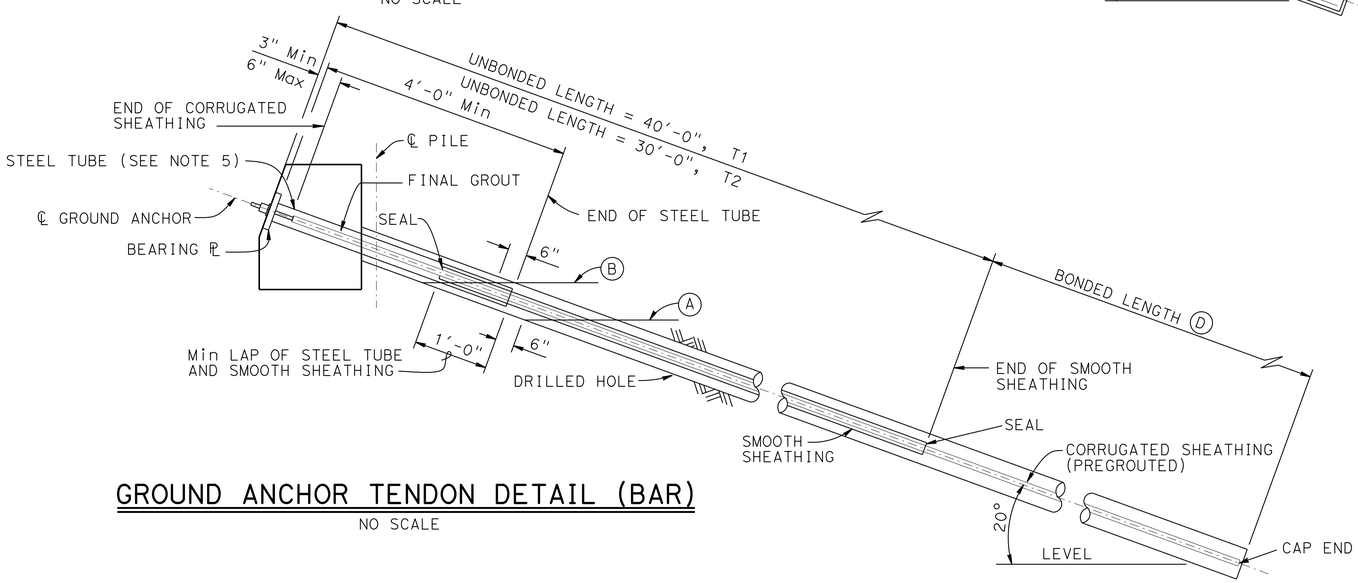


## GROUND ANCHOR TENDON DETAIL (BAR)

NO SCALE

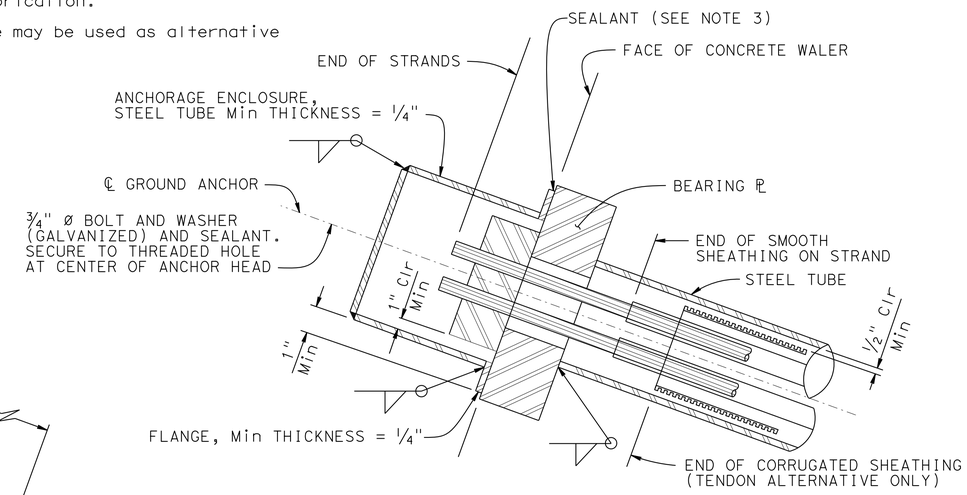


## ALTERNATIVE X

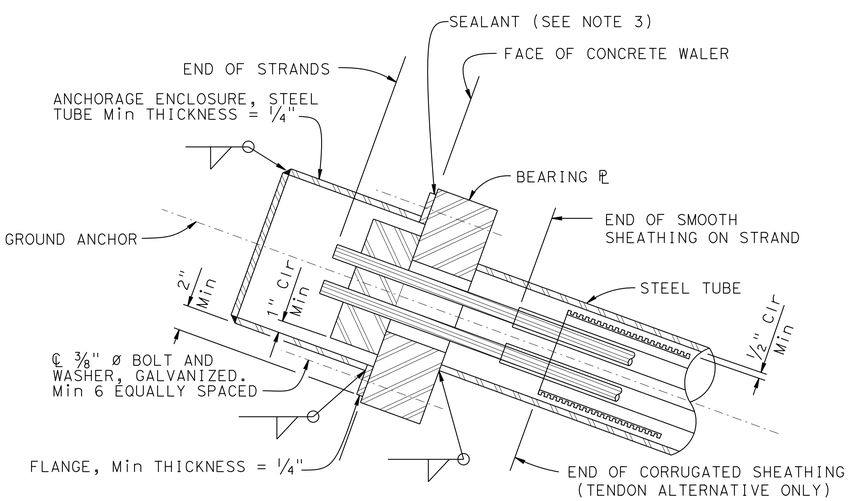


## ALTERNATIVE Y

## ANCHORAGE ENCLOSURE DETAILS

NO SCALE

| | | | |
|---|---|---|---|
| DESIGN | BY Jun Jung | CHECKED Eric Watson | |
| DETAILS | BY Yingjue Feng | CHECKED Eric Watson | |
| QUANTITIES | BY Daniel Sessions | CHECKED Gerald Dickerson | |

STATE OF CALIFORNIA
DEPARTMENT OF TRANSPORTATION

DIVISION OF ENGINEERING SERVICES
STRUCTURE DESIGN
DESIGN BRANCH 1

BRIDGE NO. 01E0016
POST MILE 17.5

# LOG FILL REPAIR WALL
# GROUND ANCHOR DETAILS

STRUCTURES DESIGN DETAIL SHEET (ENGLISH) (REV. 09-01-10)

ORIGINAL SCALE IN INCHES FOR REDUCED PLANS 0 1 2 3

UNIT: 3592
PROJECT NUMBER & PHASE: 01120001121
CONTRACT NO.: 01-0B2804

DISREGARD PRINTS BEARING EARLIER REVISION DATES

REVISION DATES: 09-08-14 01-23-15 04-14-15

SHEET 10 OF 16

FILE => ifrw-1-shgad.dgn

USERNAME => s132662 DATE PLOTTED => 14-JAN-2016 TIME PLOTTED => 14:33

| DIST | COUNTY | ROUTE | POST MILES TOTAL PROJECT | SHEET No. | TOTAL SHEETS |
|---|---|---|---|---|---|
| 01 | DN | 101 | 17.4 | 69 | 74 |

Manode Kodsuntie 09-08-15
REGISTERED CIVIL ENGINEER DATE

January 11, 2016
PLANS APPROVAL DATE

REGISTERED PROFESSIONAL ENGINEER Manode Kodsuntie No. 56671 Exp. 6-30-17 CIVIL STATE OF CALIFORNIA

*The State of California or its officers or agents shall not be responsible for the accuracy or completeness of scanned copies of this plan sheet.*

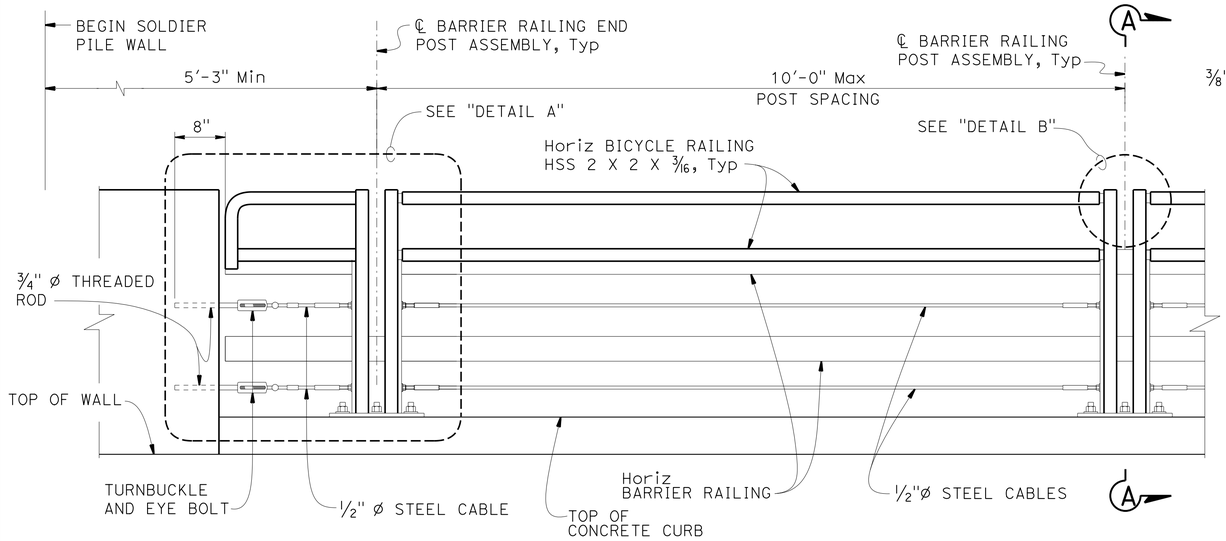


## MIRRORED ELEVATION
1" = 1'-0"

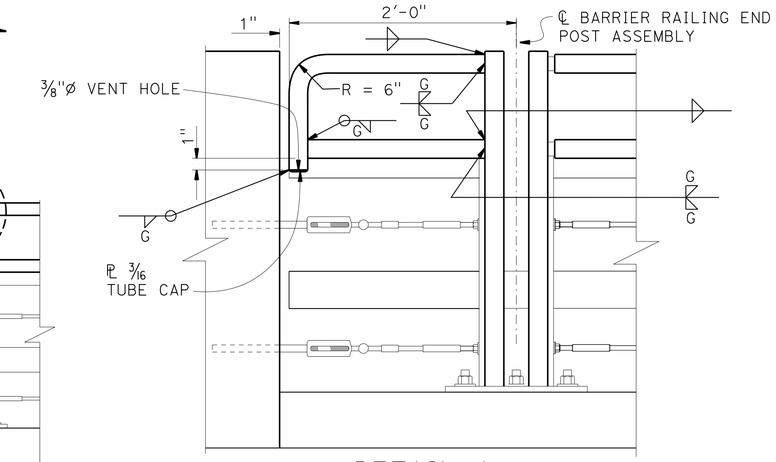


## DETAIL A
1 1/2" = 1'-0"

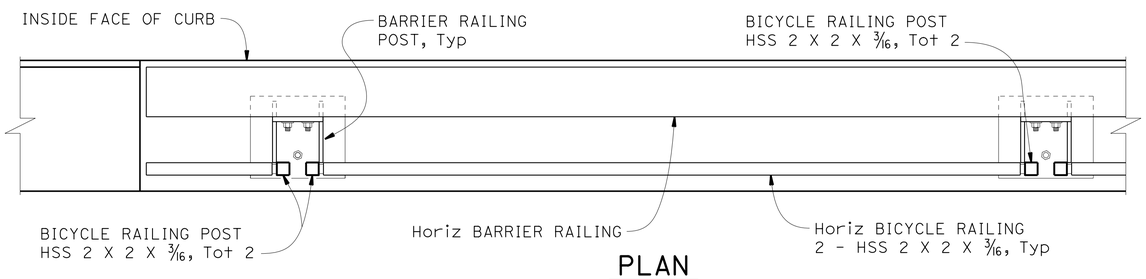


## PLAN
1" = 1'-0"

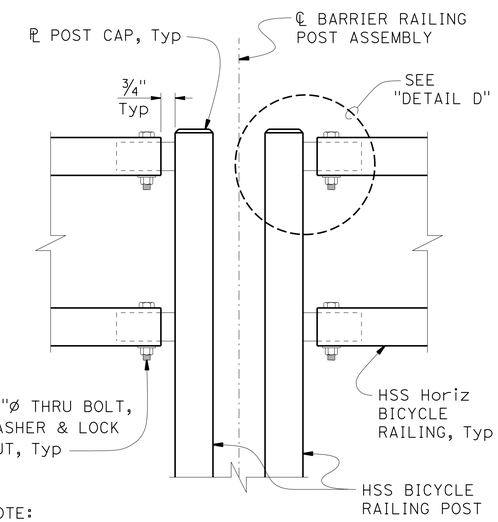


NOTE:
Details for Barrier Railing End Post Assembly similar.

## DETAIL B
3" = 1'-0"

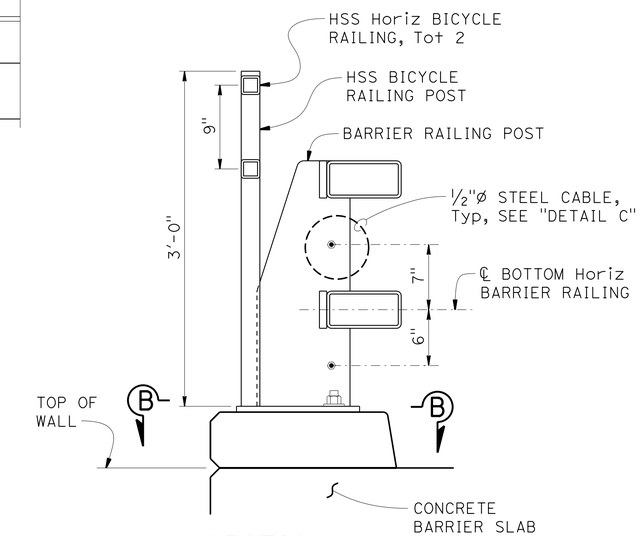


## SECTION A-A
1 1/2" = 1'-0"

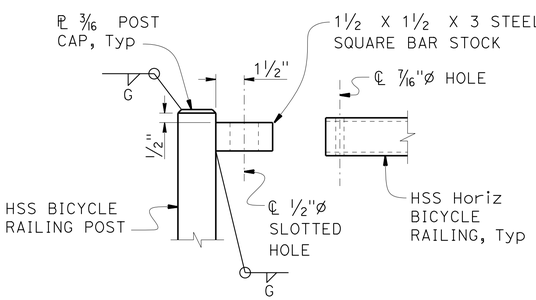


## ELEVATION

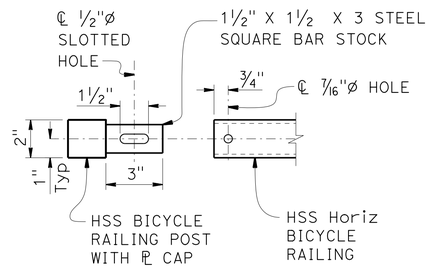


NOTE:
HSS Bicycle Railing shown separated for clarity.

## PLAN

## DETAIL D
3" = 1'-0"

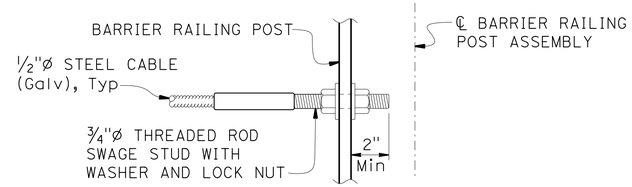


## DETAIL C
3" = 1'-0"

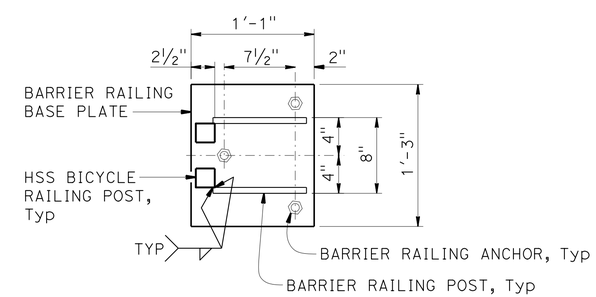


## SECTION B-B
1 1/2" = 1'-0"

NOTES:

1. For California ST-10 Barrier Railing details not shown, see Revised Standard Plans RSP B11-68, B11-69 and B11-70.
2. Bicycle railing posts shall be normal to barrier railing.
3. Paint all exposed metal parts of bridge rail and bike rail assemblies.

| | BY | CHECKED |
|---|---|---|
| DESIGN | Daniel Sessions | Manode Kodsuntie |
| DETAILS | B. Huddleston/ J. Zhou | Manode Kodsuntie |
| QUANTITIES | Daniel Sessions | Gerald Dickerson |

STATE OF CALIFORNIA
DEPARTMENT OF TRANSPORTATION

DIVISION OF ENGINEERING SERVICES
STRUCTURE DESIGN
DESIGN BRANCH 1

BRIDGE NO. 01E0016
POST MILE 17.5

# LOG FILL REPAIR WALL
# BARRIER RAIL DETAILS

STRUCTURES DESIGN DETAIL SHEET (ENGLISH) (REV. 09-01-10)

ORIGINAL SCALE IN INCHES FOR REDUCED PLANS 0 1 2 3

UNIT: 3592
PROJECT NUMBER & PHASE: 01120001121
CONTRACT NO.: 01-0B2804

DISREGARD PRINTS BEARING EARLIER REVISION DATES

REVISION DATES 04-15-15 08-14-15 10/12/15

SHEET 11 OF 16

FILE => ifrw-u-brdt.dgn

USERNAME => s132662 DATE PLOTTED => 14-JAN-2016 TIME PLOTTED => 14:33

| DIST | COUNTY | ROUTE | POST MILES TOTAL PROJECT | SHEET No. | TOTAL SHEETS |
|---|---|---|---|---|---|
| 01 | DN | 101 | 17.4 | 70 | 74 |

REGISTERED CIVIL ENGINEER — DATE 4-28-15

January 11, 2016
PLANS APPROVAL DATE

REGISTERED PROFESSIONAL ENGINEER — Kathy Gallagher — No. C62012 — Exp. 9-30-15 — CIVIL — STATE OF CALIFORNIA

*The State of California or its officers or agents shall not be responsible for the accuracy or completeness of electronic copies of this plan sheet.*

This LOTB sheet was prepared in accordance with the Caltrans Soil & Rock Logging, Classification, & Presentation Manual (2010 Edition).

See 2010 Standard Plans A10F and A10G for Soil Legend, and A10H for Rock Legend.

## BENCH MARK

SUHV 1745 Elev 1052.42
Set 1/2" rebar
N 2497901.242
E 5984371.223
NAVD 88

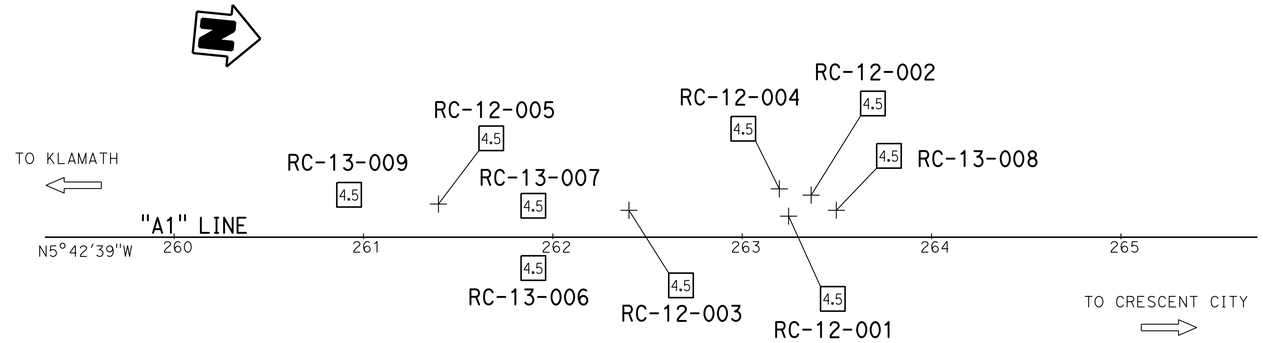


## PLAN

1" = 40'

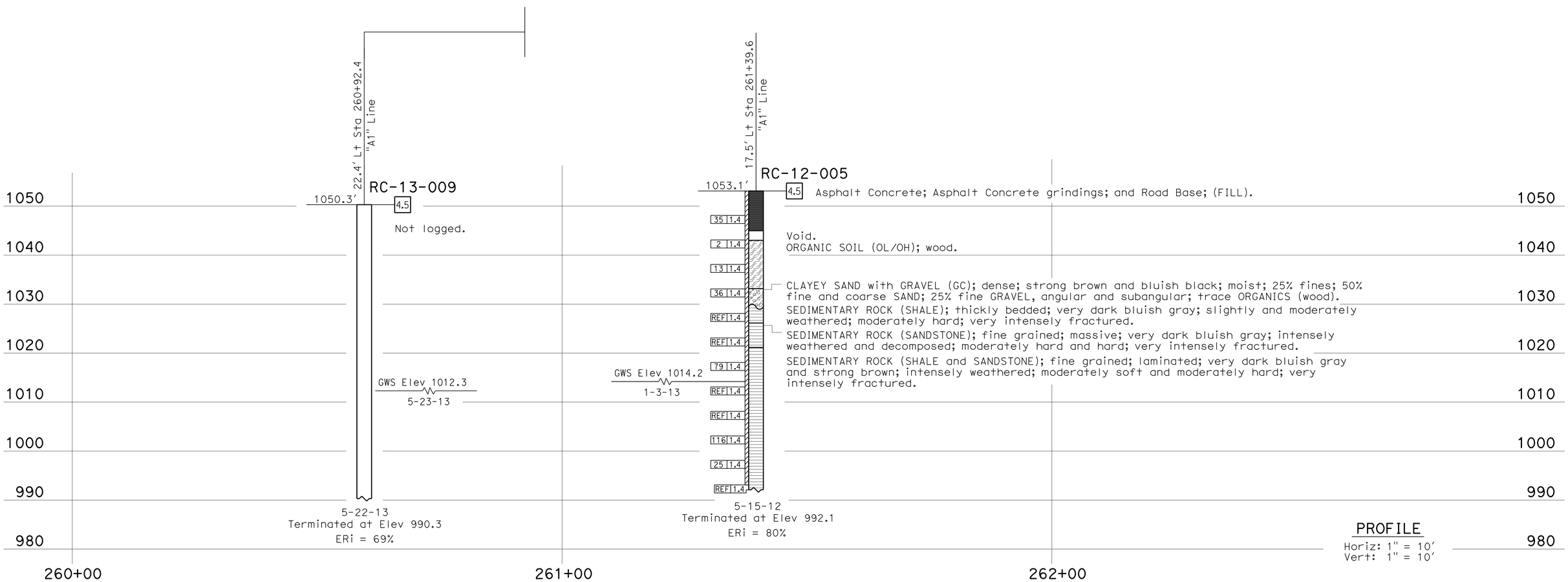


## PROFILE

Horiz: 1" = 10'
Vert: 1" = 10'

| ENGINEERING SERVICES | MATERIALS AND GEOTECHNICAL SERVICES | STATE OF CALIFORNIA DEPARTMENT OF TRANSPORTATION | DIVISION OF ENGINEERING SERVICES STRUCTURE DESIGN DESIGN BRANCH 1 | BRIDGE NO. 01E0016 POST MILE 17.5 | LOG FILL REPAIR WALL LOG OF TEST BORINGS 1 OF 5 |
|---|---|---|---|---|---|
| FUNCTIONAL SUPERVISOR NAME: Charlie Narwold | DRAWN BY: I. G-Remmen CHECKED BY: R. Newman | FIELD INVESTIGATION BY: K. Gallagher, L. Paredes-Mejia | | | |

OGS CIVIL LOG OF TEST BORINGS SHEET — ORIGINAL SCALE IN INCHES FOR REDUCED PLANS 0 1 2 3

UNIT: 3650
PROJECT NUMBER & PHASE: 01120001121 — CONTRACT NO.: 01-0B2804

DISREGARD PRINTS BEARING EARLIER REVISION DATES → REVISION DATES 04-23-15 04-28-15 — SHEET 12 OF 16

FILE => ifrw-z-lotb01.dgn

USERNAME => s132662 DATE PLOTTED => 14-JAN-2016 TIME PLOTTED => 14:33

| DIST | COUNTY | ROUTE | POST MILES TOTAL PROJECT | SHEET No. | TOTAL SHEETS |
|---|---|---|---|---|---|
| 01 | DN | 101 | 17.4 | 71 | 74 |

REGISTERED CIVIL ENGINEER — DATE 4-28-15

January 11, 2016
PLANS APPROVAL DATE

REGISTERED PROFESSIONAL ENGINEER — Kathy Gallagher — No. C62012 — Exp. 9-30-15 — CIVIL — STATE OF CALIFORNIA

*The State of California or its officers or agents shall not be responsible for the accuracy or completeness of electronic copies of this plan sheet.*

This LOTB sheet was prepared in accordance with the Caltrans Soil & Rock Logging, Classification, & Presentation Manual (2010 Edition).

See 2010 Standard Plans A10F and A10G for Soil Legend, and A10H for Rock Legend.

FOR PLAN VIEW, SEE
"LOG OF TEST BORINGS 1 OF 5"

| ENGINEERING SERVICES | MATERIALS AND GEOTECHNICAL SERVICES | STATE OF CALIFORNIA DEPARTMENT OF TRANSPORTATION | DIVISION OF ENGINEERING SERVICES STRUCTURE DESIGN DESIGN BRANCH 1 | BRIDGE NO. 01E0016 POST MILE 17.5 | LOG FILL REPAIR WALL LOG OF TEST BORINGS 2 OF 5 |
|---|---|---|---|---|---|
| FUNCTIONAL SUPERVISOR NAME: Charlie Narwold | DRAWN BY: I. G-Remmen CHECKED BY: R. Newman | FIELD INVESTIGATION BY: K. Gallagher | | | |

OGS CIVIL LOG OF TEST BORINGS SHEET — ORIGINAL SCALE IN INCHES FOR REDUCED PLANS 0 1 2 3 — UNIT: 3650 PROJECT NUMBER & PHASE: 01120001121 CONTRACT NO.: 01-0B2804 — DISREGARD PRINTS BEARING EARLIER REVISION DATES → REVISION DATES 04-28-15 04-28-15 — SHEET 13 OF 16

FILE => ifrw-z-lotb02.dgn

USERNAME => s132662 DATE PLOTTED => 14-JAN-2016 TIME PLOTTED => 14:33

| DIST | COUNTY | ROUTE | POST MILES TOTAL PROJECT | SHEET No. | TOTAL SHEETS |
|---|---|---|---|---|---|
| 01 | DN | 101 | 17.4 | 72 | 74 |

REGISTERED CIVIL ENGINEER — DATE 4-28-15

January 11, 2016
PLANS APPROVAL DATE

REGISTERED PROFESSIONAL ENGINEER — Kathy Gallagher — No. C62012 — Exp. 9-30-15 — CIVIL — STATE OF CALIFORNIA

*The State of California or its officers or agents shall not be responsible for the accuracy or completeness of electronic copies of this plan sheet.*

This LOTB sheet was prepared in accordance with the Caltrans Soil & Rock Logging, Classification, & Presentation Manual (2010 Edition).

See 2010 Standard Plans A10F and A10G for Soil Legend, and A10H for Rock Legend.

FOR PLAN VIEW, SEE
"LOG OF TEST BORINGS 1 OF 5"

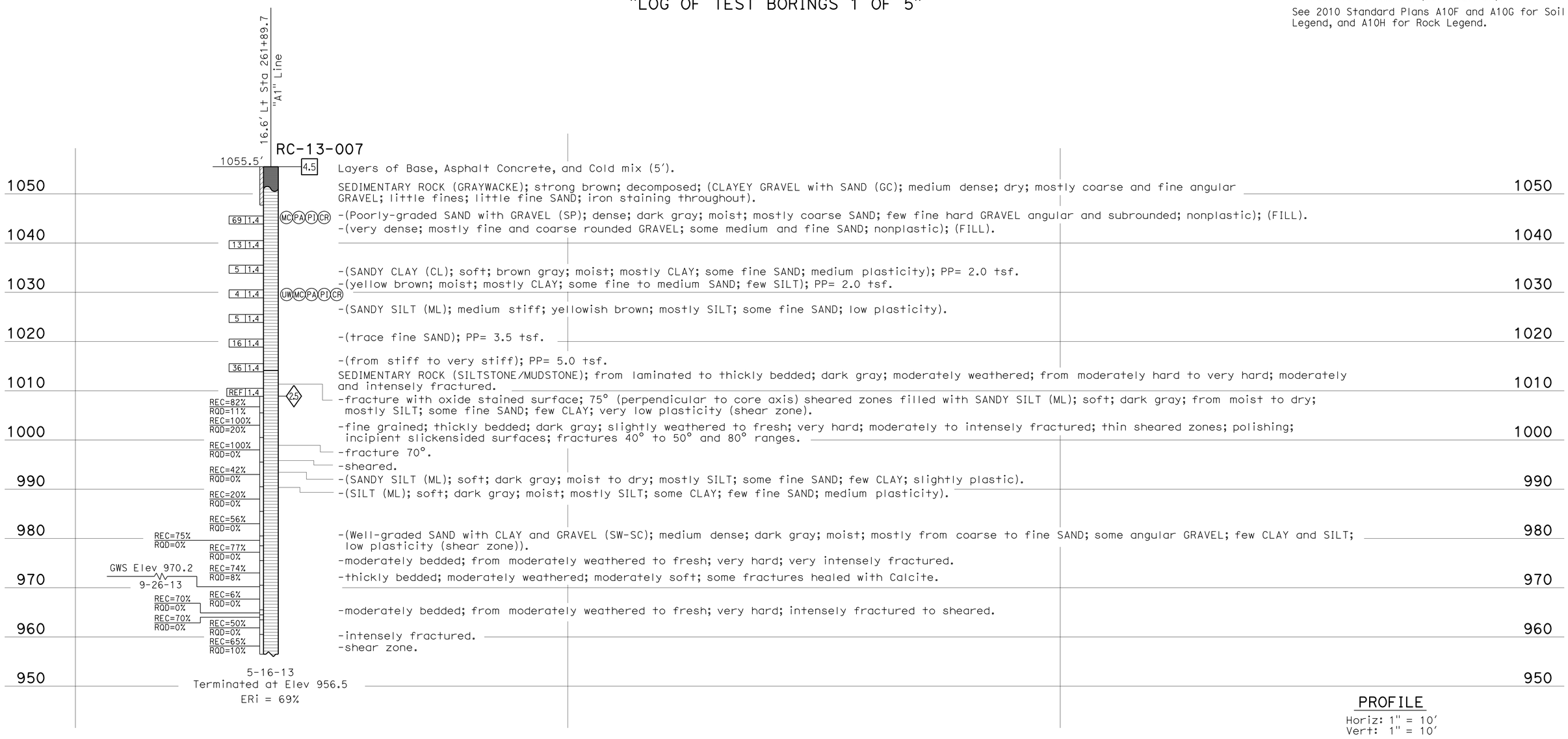


| ENGINEERING SERVICES | MATERIALS AND GEOTECHNICAL SERVICES | STATE OF CALIFORNIA DEPARTMENT OF TRANSPORTATION | DIVISION OF ENGINEERING SERVICES STRUCTURE DESIGN DESIGN BRANCH 1 | BRIDGE NO. 01E0016 POST MILE 17.5 | LOG FILL REPAIR WALL LOG OF TEST BORINGS 3 OF 5 |
|---|---|---|---|---|---|
| FUNCTIONAL SUPERVISOR NAME: Charlie Narwold | DRAWN BY: I. G-Remmen CHECKED BY: R. Newman | FIELD INVESTIGATION BY: L. Paredes-Mejia | | | |

OGS CIVIL LOG OF TEST BORINGS SHEET — ORIGINAL SCALE IN INCHES FOR REDUCED PLANS 0 1 2 3 — UNIT: 3650 PROJECT NUMBER & PHASE: 01120001121 CONTRACT NO.: 01-0B2804 — DISREGARD PRINTS BEARING EARLIER REVISION DATES — REVISION DATES 04-22-15 04-28-15 — SHEET 14 OF 16

FILE => ifrw-z-lotb03.dgn

USERNAME => s132662 DATE PLOTTED => 14-JAN-2016 TIME PLOTTED => 14:33

| DIST | COUNTY | ROUTE | POST MILES TOTAL PROJECT | SHEET No. | TOTAL SHEETS |
|---|---|---|---|---|---|
| 01 | DN | 101 | 17.4 | 73 | 74 |

REGISTERED CIVIL ENGINEER — DATE 4-28-15

January 11, 2016
PLANS APPROVAL DATE

REGISTERED PROFESSIONAL ENGINEER — Kathy Gallagher — No. C62012 — Exp. 9-30-15 — CIVIL — STATE OF CALIFORNIA

*The State of California or its officers or agents shall not be responsible for the accuracy or completeness of electronic copies of this plan sheet.*

This LOTB sheet was prepared in accordance with the Caltrans Soil & Rock Logging, Classification, & Presentation Manual (2010 Edition).

See 2010 Standard Plans A10F and A10G for Soil Legend, and A10H for Rock Legend.

FOR PLAN VIEW, SEE
"LOG OF TEST BORINGS 1 OF 5"

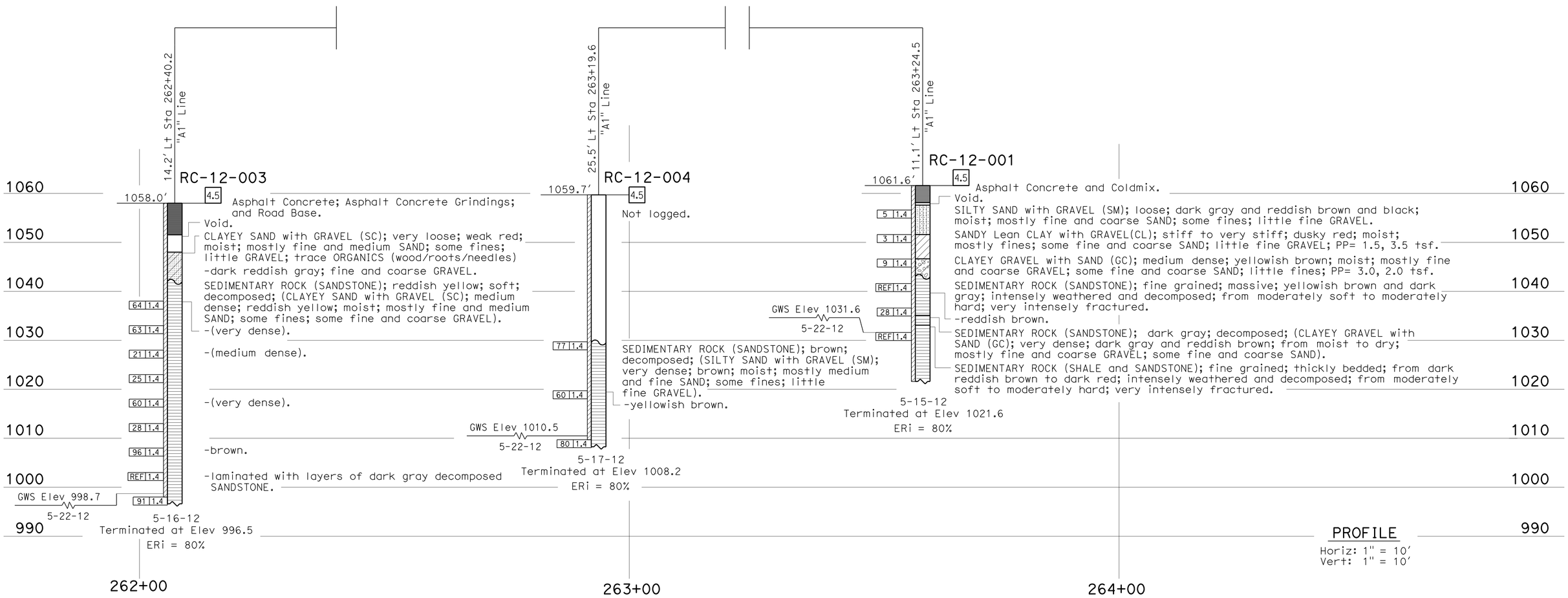


| ENGINEERING SERVICES | MATERIALS AND GEOTECHNICAL SERVICES | STATE OF CALIFORNIA DEPARTMENT OF TRANSPORTATION | DIVISION OF ENGINEERING SERVICES STRUCTURE DESIGN DESIGN BRANCH 1 | BRIDGE NO. 01E0016 POST MILE 17.5 | LOG FILL REPAIR WALL LOG OF TEST BORINGS 4 OF 5 |
|---|---|---|---|---|---|
| FUNCTIONAL SUPERVISOR NAME: Charlie Narwold | DRAWN BY: I. G-Remmen CHECKED BY: R. Newman | FIELD INVESTIGATION BY: K. Gallagher | | | |

OGS CIVIL LOG OF TEST BORINGS SHEET — ORIGINAL SCALE IN INCHES FOR REDUCED PLANS 0 1 2 3

UNIT: 3650
PROJECT NUMBER & PHASE: 01120001121 — CONTRACT NO.: 01-0B2804

DISREGARD PRINTS BEARING EARLIER REVISION DATES → REVISION DATES 04-28-15 04-28-15 — SHEET 15 OF 16

FILE => ifrw-z-lotb04.dgn

USERNAME => s132662 DATE PLOTTED => 14-JAN-2016 TIME PLOTTED => 14:33

| DIST | COUNTY | ROUTE | POST MILES TOTAL PROJECT | SHEET No. | TOTAL SHEETS |
|---|---|---|---|---|---|
| 01 | DN | 101 | 17.4 | 74 | 74 |

REGISTERED CIVIL ENGINEER — DATE 4-28-15

PLANS APPROVAL DATE January 11, 2016

REGISTERED PROFESSIONAL ENGINEER Kathy Gallagher No. C62012 Exp. 9-30-15 CIVIL STATE OF CALIFORNIA

*The State of California or its officers or agents shall not be responsible for the accuracy or completeness of electronic copies of this plan sheet.*

This LOTB sheet was prepared in accordance with the Caltrans Soil & Rock Logging, Classification, & Presentation Manual (2010 Edition).

See 2010 Standard Plans A10F and A10G for Soil Legend, and A10H for Rock Legend.

FOR PLAN VIEW, SEE
"LOG OF TEST BORINGS 1 OF 5"

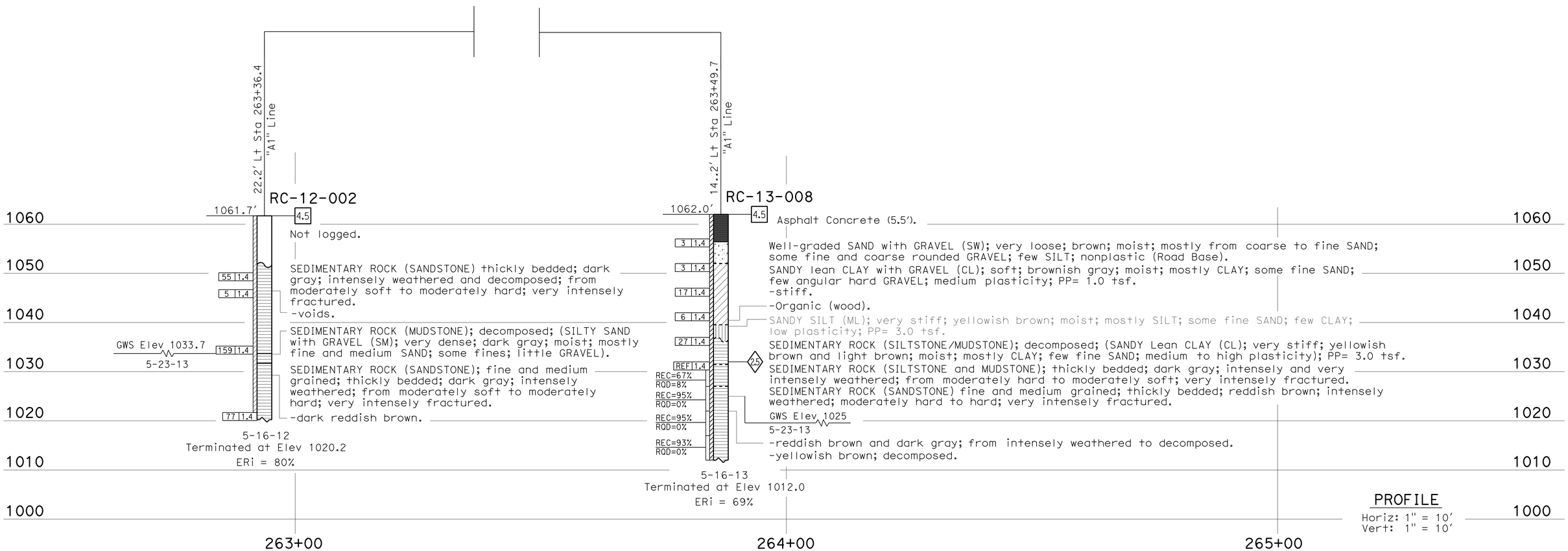


| ENGINEERING SERVICES | MATERIALS AND GEOTECHNICAL SERVICES | STATE OF CALIFORNIA DEPARTMENT OF TRANSPORTATION | DIVISION OF ENGINEERING SERVICES STRUCTURE DESIGN DESIGN BRANCH 1 | BRIDGE NO. 01E0016 POST MILE 17.5 | LOG FILL REPAIR WALL LOG OF TEST BORINGS 5 OF 5 |
|---|---|---|---|---|---|
| FUNCTIONAL SUPERVISOR NAME: Charlie Narwold | DRAWN BY: I. G-Remmen CHECKED BY: R. Newman | FIELD INVESTIGATION BY: K. Gallagher, L. Paredes-Mejia | | | |

OGS CIVIL LOG OF TEST BORINGS SHEET

ORIGINAL SCALE IN INCHES FOR REDUCED PLANS 0 1 2 3

UNIT: 3650
PROJECT NUMBER & PHASE: 01120001121 CONTRACT NO.: 01-0B2804

DISREGARD PRINTS BEARING EARLIER REVISION DATES → REVISION DATES 04-23-15 04-28-15 SHEET 16 OF 16

FILE => ifrw-z-lotb05.dgn

USERNAME => s132662 DATE PLOTTED => 14-JAN-2016 TIME PLOTTED => 14:33