Dist	COUNTY	ROUTE	POST MILES TOTAL PROJECT	SHEET No.	TOTAL SHEETS
01	Lak	20	13.5/31.4	1	73

ACSTP-P020(170)E

STATE OF CALIFORNIA
DEPARTMENT OF TRANSPORTATION

PROJECT PLANS FOR CONSTRUCTION ON
STATE HIGHWAY
IN LAKE COUNTY
AT GLENHAVEN
FROM 0.1 MILE WEST OF SAYRE AVENUE
TO 0.2 MILE WEST OF ROUTE 53

TO BE SUPPLEMENTED BY STANDARD PLANS DATED 2010

INDEX OF PLANS

SHEET No.	DESCRIPTION
1	TITLE AND LOCATION MAP
2-4	TYPICAL CROSS SECTIONS
5-10	CONSTRUCTION DETAILS
11-12	CONSTRUCTION AREA SIGNS
13-29	PAVEMENT DELINEATION QUANTITIES
30	SIGN QUANTITIES
31-40	SUMMARY OF QUANTITIES
41-73	REVISED STANDARD PLANS

THE STANDARD PLANS LIST APPLICABLE TO THIS CONTRACT IS INCLUDED IN THE NOTICE TO BIDDERS AND SPECIAL PROVISIONS BOOK.

LOCATION MAP

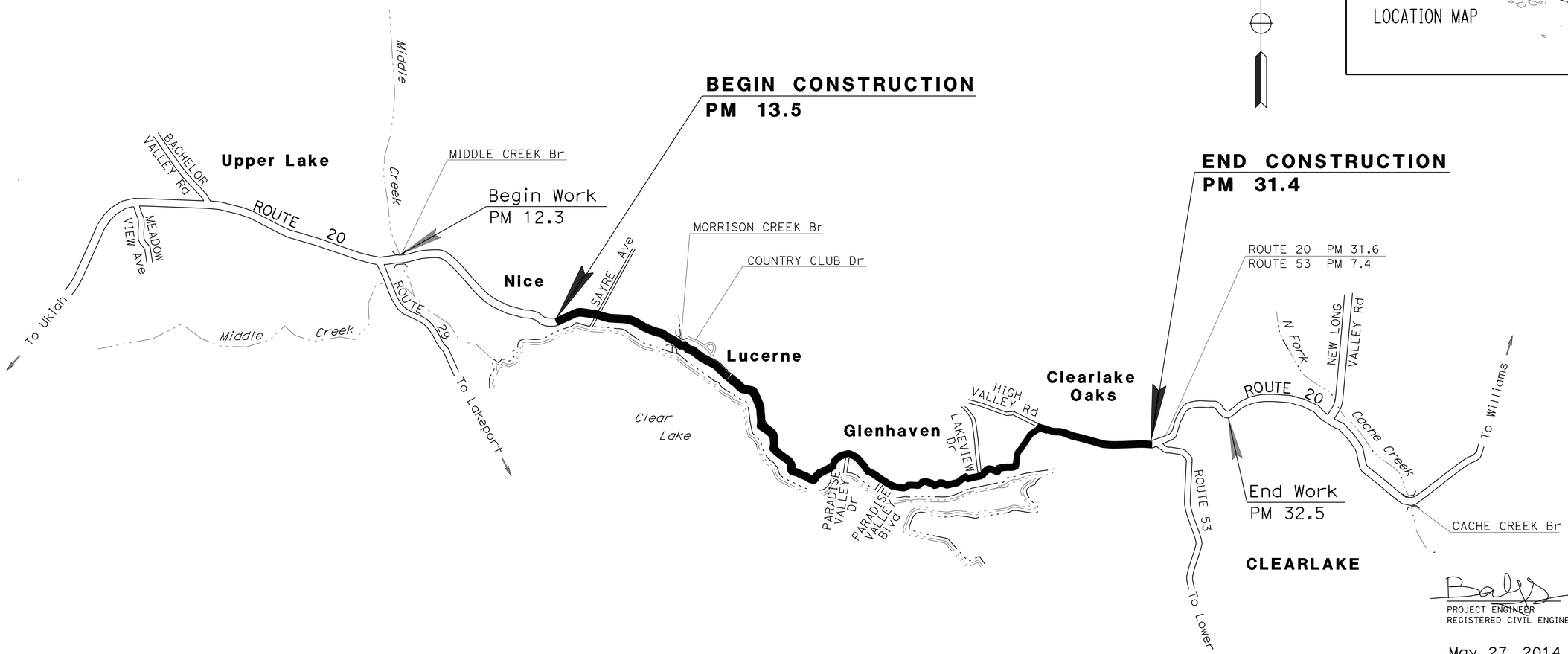

NO SCALE

5-13-14
PROJECT ENGINEER DATE
REGISTERED CIVIL ENGINEER

REGISTERED PROFESSIONAL ENGINEER
BALJINDER S. BRAR
No. C67847
Exp. 06/30/15
CIVIL
STATE OF CALIFORNIA

May 27, 2014
PLANS APPROVAL DATE

THE STATE OF CALIFORNIA OR ITS OFFICERS OR AGENTS SHALL NOT BE RESPONSIBLE FOR THE ACCURACY OR COMPLETENESS OF SCANNED COPIES OF THIS PLAN SHEET.

THE CONTRACTOR SHALL POSSESS THE CLASS (OR CLASSES) OF LICENSE AS SPECIFIED IN THE "NOTICE TO BIDDERS."

PROJECT MANAGER: SEBASTIAN COHEN
DESIGN ENGINEER: DEANN SPANGLER

CONTRACT No.	01-0B0004
PROJECT ID	0112000003

LAST REVISION 3-21-14
DATE PLOTTED => 10-JUN-2014
TIME PLOTTED => 10:16

Dist	COUNTY	ROUTE	POST MILES TOTAL PROJECT	SHEET No.	TOTAL SHEETS
01	Lak	20	13.5/31.4	2	73

REGISTERED CIVIL ENGINEER 5-13-14 DATE

5-27-14
PLANS APPROVAL DATE

REGISTERED PROFESSIONAL ENGINEER BALJINDER S. BRAR No. C 67847 Exp. 6-30-15 CIVIL STATE OF CALIFORNIA

THE STATE OF CALIFORNIA OR ITS OFFICERS OR AGENTS SHALL NOT BE RESPONSIBLE FOR THE ACCURACY OR COMPLETENESS OF SCANNED COPIES OF THIS PLAN SHEET.

NOTES:

1. FOR ACCURATE RIGHT OF WAY DATA, CONTACT RIGHT OF WAY ENGINEERING AT THE DISTRICT OFFICE.
2. DIMENSIONS OF THE PAVEMENT STRUCTURES (STRUCTURAL SECTION) ARE SUBJECT TO TOLERANCES SPECIFIED IN THE STANDARD SPECIFICATIONS.
3. FOR LOCATIONS AND DETAILS OF COLD PLANE AC Pvmt, MBGR, MGS SAFETY EDGE/Shld BACKING, REPLACE AC SURFACING, DIKE, GPI, ARBSC, AND RUMBLE STRIP SEE Const DETAILS AND SUMMARY OF QUANTITIES SHEETS
4. THE SAFETY EDGE WILL BE CONSTRUCTED WITH EACH LIFT.
5. SUPERELEVATIONS AND CROSS SLOPES AS SHOWN OR AS DIRECTED BY THE ENGINEER.
6. MORRISON CREEK BRIDGE PM 16.84 - PM 16.86
7. EXISTING UTILITY FACILITIES ARE NOT SHOWN ON THESE PLANS.

ABBREVIATIONS:

TWLT - TWO WAY LEFT TURN
AR - ASPHALT-RUBBER BINDER
GPI - GEOSYNTHETIC PAVEMENT INTERLAYER
GSM - GEOCOMPOSITE STRIP MEMBRANE
RHMA (GG) - RUBBERIZED HOT MIX ASPHALT (GAP GRADED)
HMA (A) - HOT MIX ASPHALT (TYPE A)
ARBSC - ASPHALT RUBBER BINDER SEAL COAT
HFST - HIGH FRICTION SURFACE TREATMENT

DESIGN DESIGNATION - ROUTE 20

2015 ADT = 9,860 D = 60%
2020 ADT = 11,200 T = 7%
2020 DHV = 1,180 V = 55 MPH
TI(5) = 9.0

PAVEMENT CLIMATE REGION

LOW MOUNTAIN

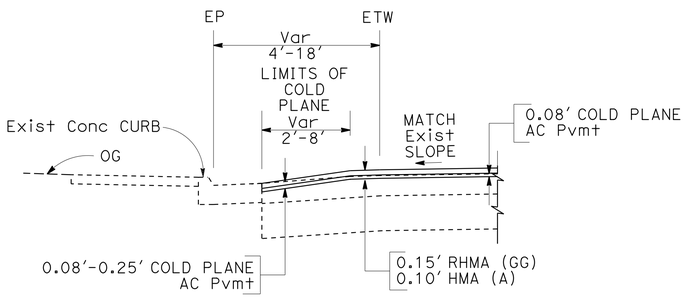

PM 16.86 TO PM 17.96

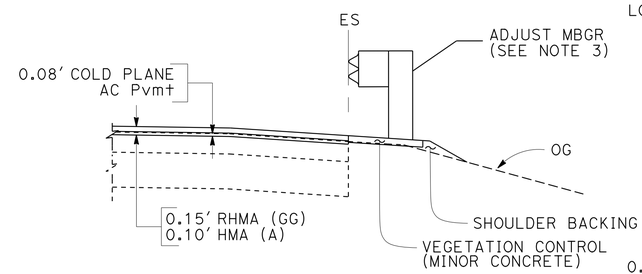

PM 14.64 TO PM 14.76
PM 14.43 TO PM 14.59

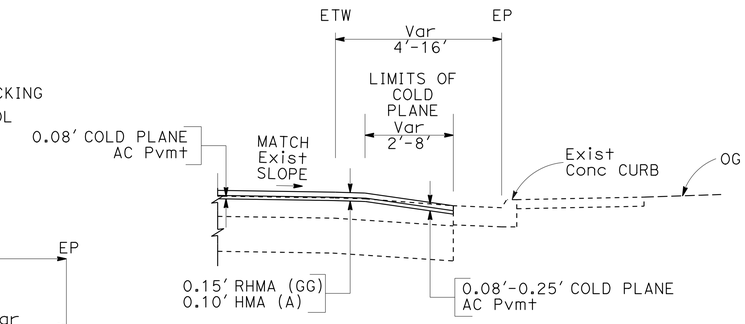

PM 17.48 TO PM 17.52
PM 17.26 TO PM 17.39
PM 16.87 TO PM 17.08

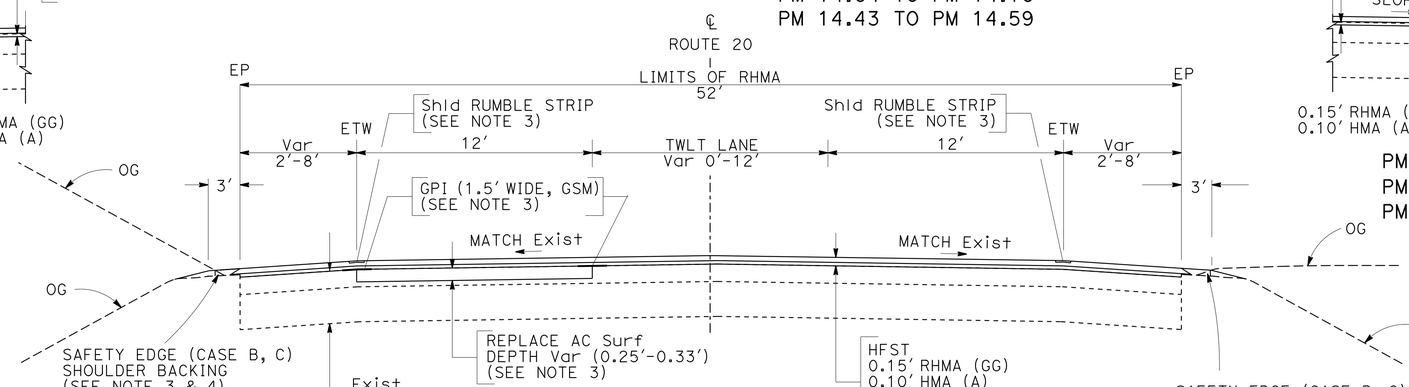

PM 15.40 TO PM 15.75
PM 13.55 TO PM 14.44

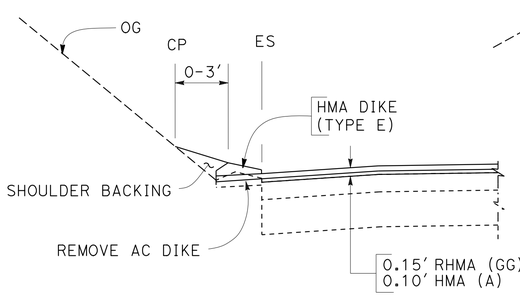

PM 14.41 TO PM 14.43
PM 14.31 TO PM 14.39
PM 13.96 TO PM 14.00
PM 13.42 TO PM 13.52

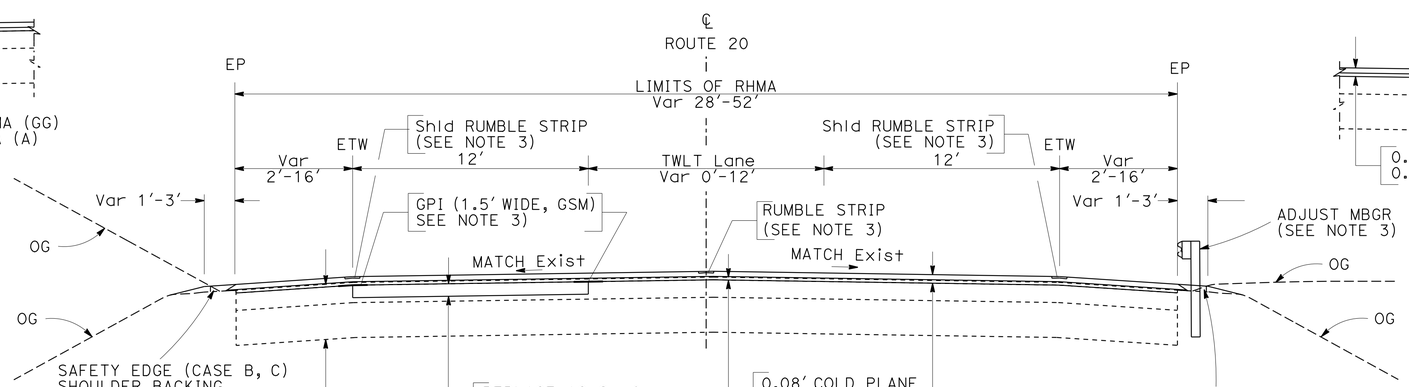

PM 16.86 TO PM 18.00
PM 15.75 TO PM 16.84
PM 14.44 TO PM 15.40
PM 13.50 TO PM 13.55

ROUTE 20

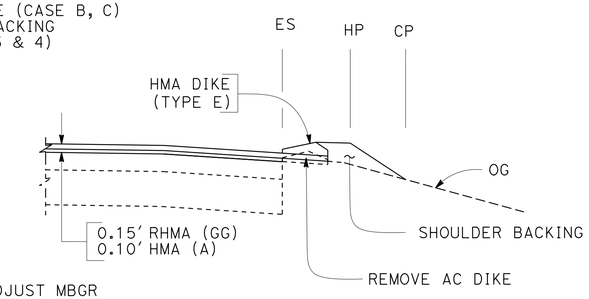

PM 14.20 TO PM 14.23
PM 13.73 TO PM 13.77

TYPICAL CROSS SECTIONS

NO SCALE

X-1

STATE OF CALIFORNIA - DEPARTMENT OF TRANSPORTATION
Caltrans® DIVISION OF ENGINEERING

FUNCTIONAL SUPERVISOR: DEANN SPANGLER
CALCULATED-DESIGNED BY: BALJINDER BRAR
CHECKED BY: JAMES P LEE
REVISED BY / DATE REVISED

LAST REVISION 3-21-14
DATE PLOTTED => 10-JUN-2014
TIME PLOTTED => 10:16

Dist	COUNTY	ROUTE	POST MILES TOTAL PROJECT	SHEET No.	TOTAL SHEETS
01	Lak	20	13.5/31.4	3	73

REGISTERED CIVIL ENGINEER 5-13-14 DATE

5-27-14
PLANS APPROVAL DATE

REGISTERED PROFESSIONAL ENGINEER BALJINDER S. BRAR No. C 67847 Exp 6-30-15 CIVIL STATE OF CALIFORNIA

THE STATE OF CALIFORNIA OR ITS OFFICERS OR AGENTS SHALL NOT BE RESPONSIBLE FOR THE ACCURACY OR COMPLETENESS OF SCANNED COPIES OF THIS PLAN SHEET.

NOTE:

1. EXISTING UTILITY FACILITIES ARE NOT SHOWN ON THESE PLANS.

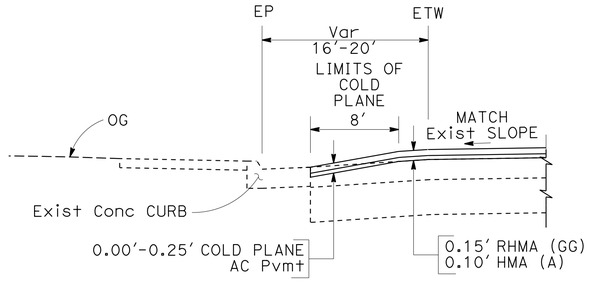

PM 28.80 TO PM 28.93
PM 27.85 TO PM 27.92

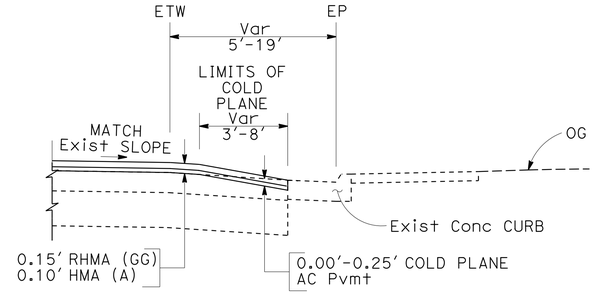

PM 28.84 TO PM 29.05
PM 28.72 TO PM 28.73
PM 28.63 TO PM 28.68
PM 28.17 TO PM 28.20
PM 27.70 TO PM 27.79

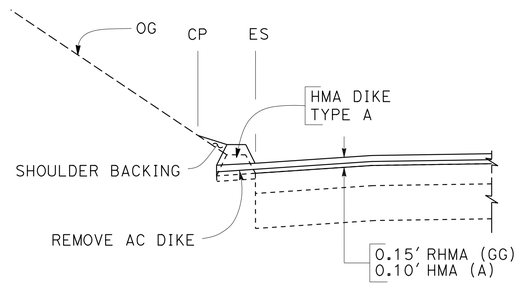

PM 27.72 TO PM 27.77

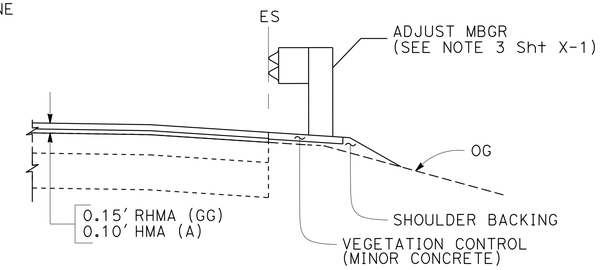

PM 30.58 TO PM 30.60
PM 27.53 TO PM 27.54
PM 27.26 TO PM 27.28
PM 27.18 TO PM 27.19
PM 26.90 TO PM 26.91

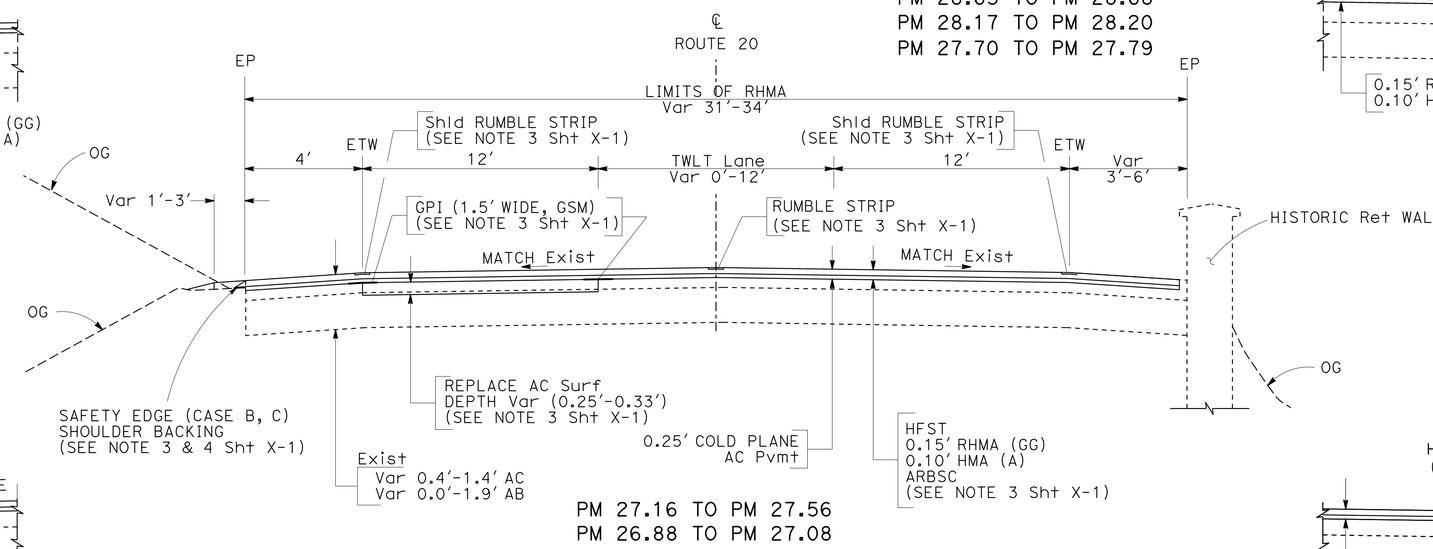

PM 27.16 TO PM 27.56
PM 26.88 TO PM 27.08

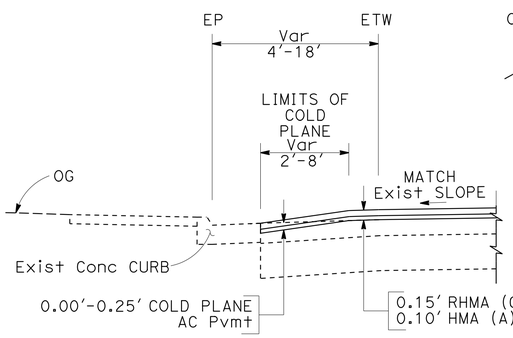

PM 14.20 TO PM 14.26
PM 13.65 TO PM 13.76

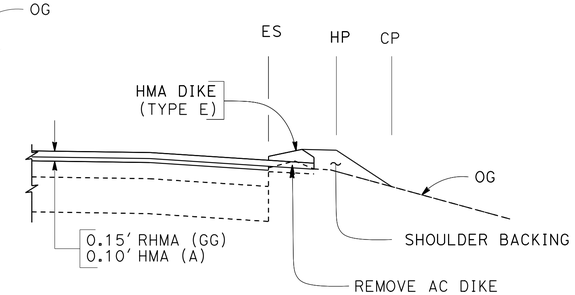

PM 27.05 TO PM 27.08

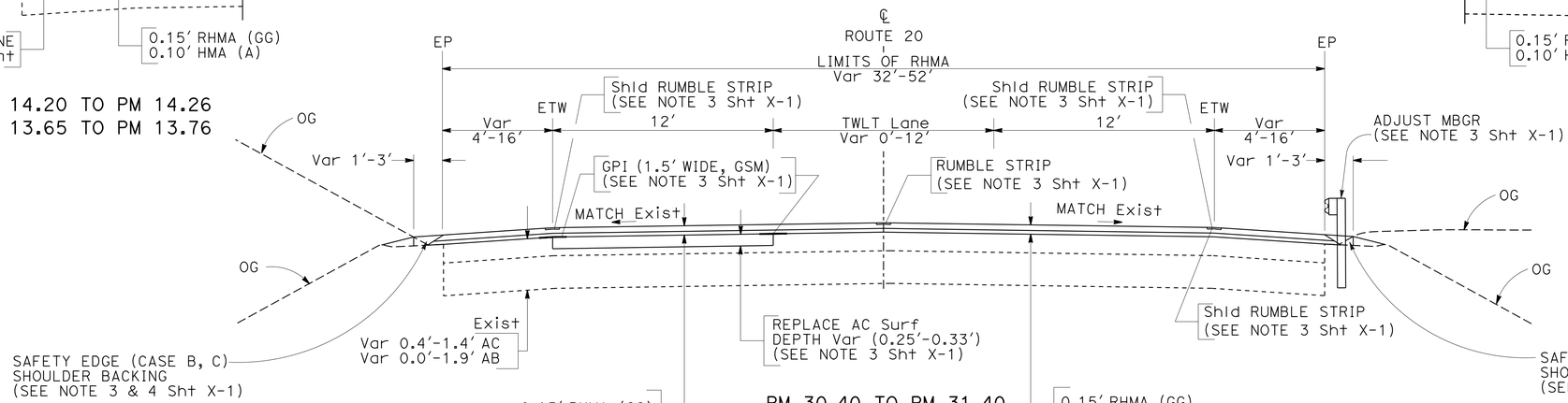

PM 30.40 TO PM 31.40
PM 27.56 TO PM 29.60
PM 27.08 TO PM 27.16
PM 26.60 TO PM 26.88
PM 18.00 TO PM 19.25

ROUTE 20

TYPICAL CROSS SECTIONS

NO SCALE

X-2

STATE OF CALIFORNIA - DEPARTMENT OF TRANSPORTATION
Caltrans® DIVISION OF ENGINEERING

FUNCTIONAL SUPERVISOR: DEANN SPANGLER
CALCULATED-DESIGNED BY: JAMES P LEE
CHECKED BY: BALJINDER BRAR
REVISED BY
DATE REVISED

LAST REVISION 3-21-14
DATE PLOTTED => 10-JUN-2014
TIME PLOTTED => 10:29

Dist	COUNTY	ROUTE	POST MILES TOTAL PROJECT	SHEET No.	TOTAL SHEETS
01	Lak	20	13.5/31.4	4	73

REGISTERED CIVIL ENGINEER 5-13-14 DATE

5-27-14
PLANS APPROVAL DATE

REGISTERED PROFESSIONAL ENGINEER BALJINDER S. BRAR No. C 67847 Exp 6-30-15 CIVIL STATE OF CALIFORNIA

THE STATE OF CALIFORNIA OR ITS OFFICERS OR AGENTS SHALL NOT BE RESPONSIBLE FOR THE ACCURACY OR COMPLETENESS OF SCANNED COPIES OF THIS PLAN SHEET.

NOTE:

1. EXISTING UTILITY FACILITIES ARE NOT SHOWN ON THESE PLANS.

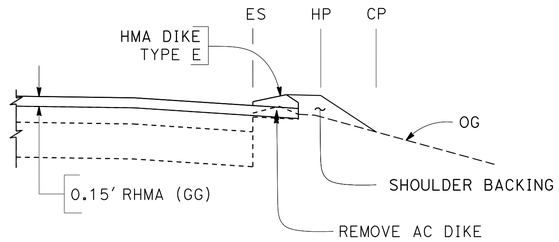

PM 21.82 TO PM 21.89

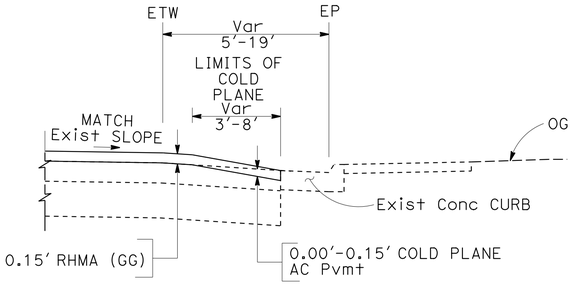

PM 25.11 TO PM 25.16

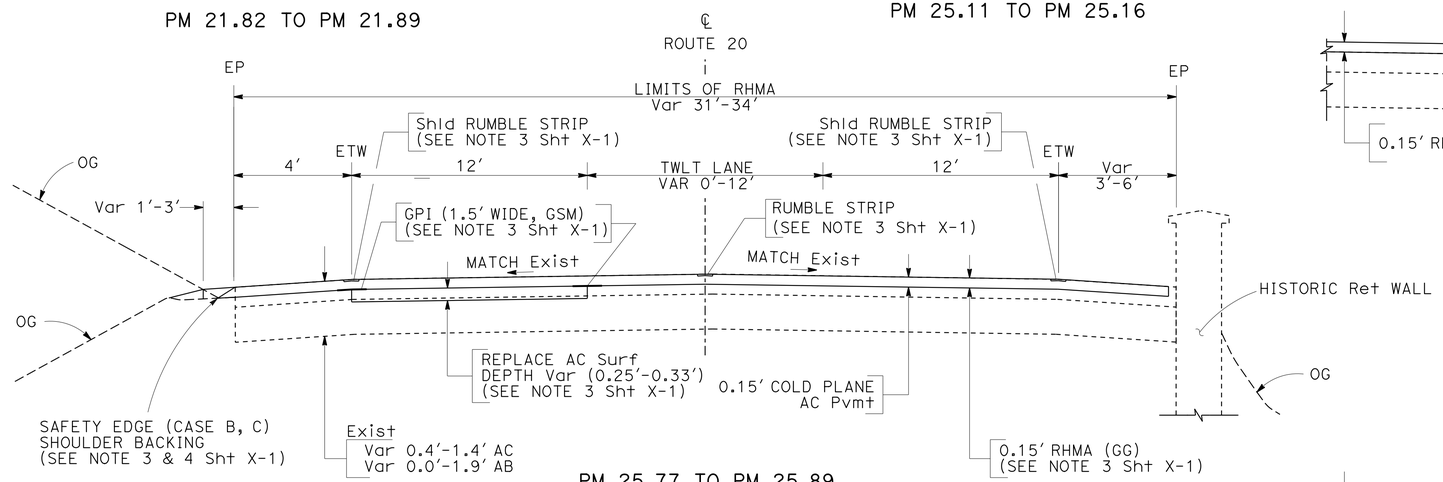

PM 25.77 TO PM 25.89
PM 24.45 TO PM 24.65

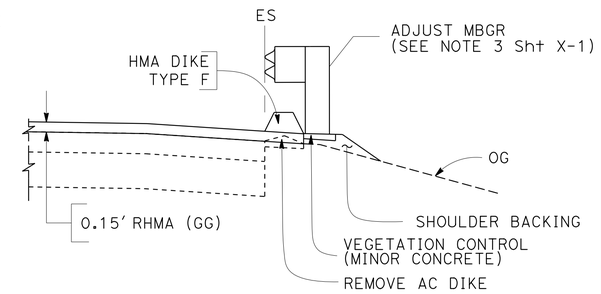

PM 25.86 TO PM 25.87
PM 24.62 TO PM 24.63

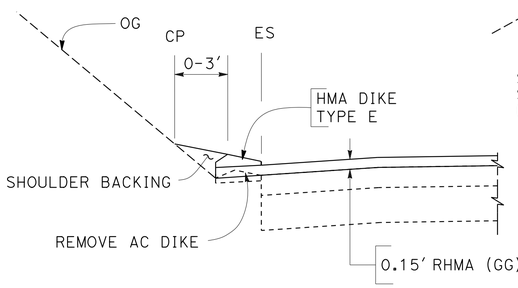

PM 21.63 TO PM 21.67
PM 21.29 TO PM 21.32

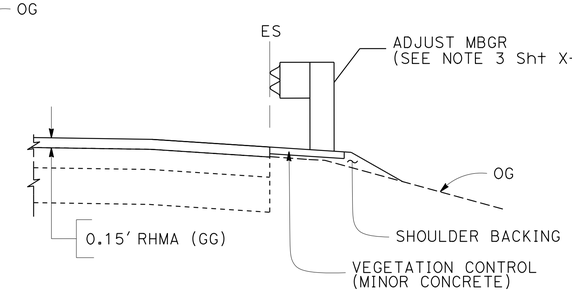

PM 26.01 TO PM 26.07
PM 25.79 TO PM 25.80
PM 22.23 TO PM 22.34
PM 22.00 TO PM 22.05
PM 21.58 TO PM 21.77

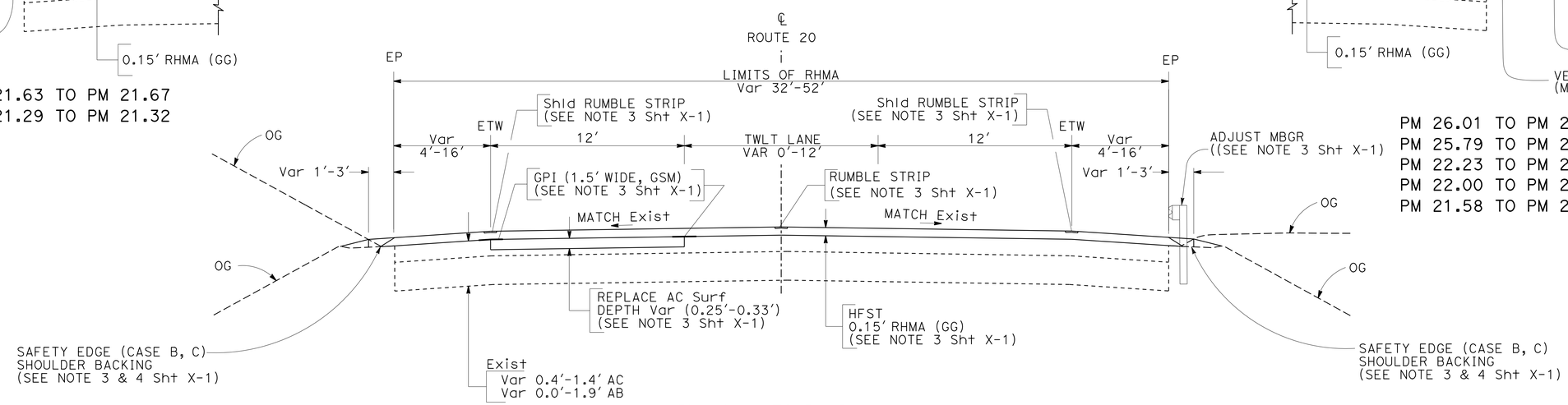

PM 29.60 TO PM 30.40
PM 25.89 TO PM 26.60
PM 24.65 TO PM 25.77
PM 19.25 TO PM 24.45

TYPICAL CROSS SECTIONS

ROUTE 20

NO SCALE

X-3

STATE OF CALIFORNIA - DEPARTMENT OF TRANSPORTATION
Caltrans DIVISION OF ENGINEERING

FUNCTIONAL SUPERVISOR: DEANN SPANGLER
CALCULATED-DESIGNED BY: BALJINDER BRAR
CHECKED BY: JAMES P LEE
REVISED BY
DATE REVISED

LAST REVISION 3-21-14
DATE PLOTTED => 10-JUN-2014
TIME PLOTTED => 10:25

Dist	COUNTY	ROUTE	POST MILES TOTAL PROJECT	SHEET No.	TOTAL SHEETS
01	Lak	20	13.5/31.4	5	73

REGISTERED CIVIL ENGINEER 5-13-14 DATE

5-27-14
PLANS APPROVAL DATE

REGISTERED PROFESSIONAL ENGINEER BALJINDER S. BRAR No. C 67847 Exp 6-30-15 CIVIL STATE OF CALIFORNIA

THE STATE OF CALIFORNIA OR ITS OFFICERS OR AGENTS SHALL NOT BE RESPONSIBLE FOR THE ACCURACY OR COMPLETENESS OF SCANNED COPIES OF THIS PLAN SHEET.

NOTES:

1. MUST MAINTAIN DRAINAGE AND ADA ACCESSIBILITY DURING COLD PLANE OPERATION
2. FOR "L" AND "W" DIMENSIONS SEE SUMMARY OF QUANTITY SHEETS
3. EXISTING UTILITY FACILITIES ARE NOT SHOWN ON THESE PLANS

ABBREVIATIONS:

GPI (GSM) - GEOSYNTHETIC PAVEMENT INTERLAYER (GEOCOMPOSITE STRIP MEMBRANE)
RHMA (GG) - RUBBERIZED HOT MIX ASPHALT (GAP GRADED)
HMA (A) - HOT MIX ASPHALT (TYPE A)

LEGEND:

REPLACE AC SURFACING (DIGOUTS) DEPTH, LENGTHS AND WIDTHS VARY
COLD PLANE AC Pvmt

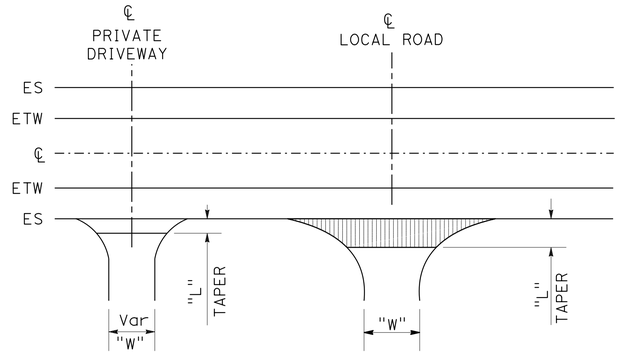

TYPICAL INTERSECTION WORK

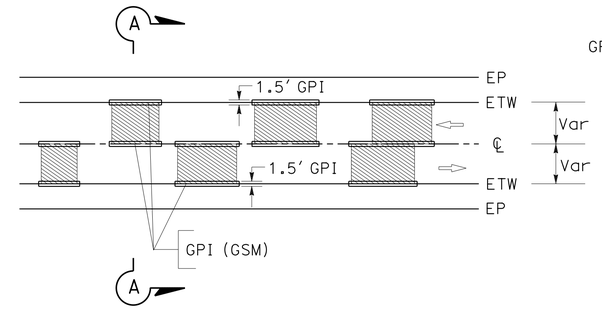

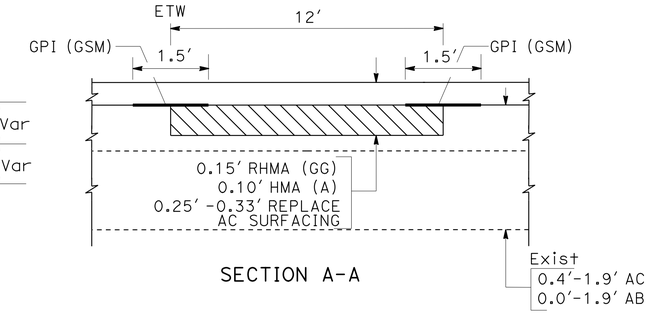

SECTION A-A

REPLACE AC SURFACING FOR LOCATIONS AND DEPTH SEE SHEETS X-1, X-2, X-3, Q-5

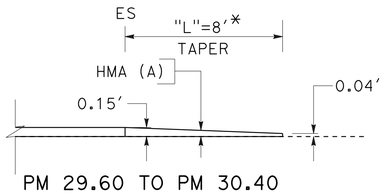

PM 29.60 TO PM 30.40
PM 19.25 TO PM 26.60

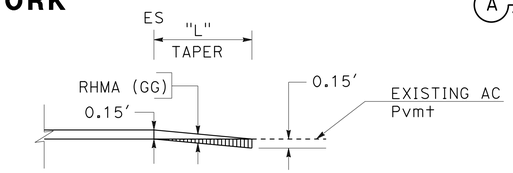

PM 29.60 TO PM 30.40
PM 19.25 TO PM 26.60

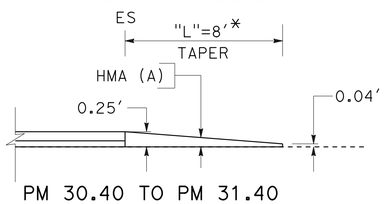

PM 30.40 TO PM 31.40
PM 26.60 TO PM 29.60
PM 18.00 TO PM 19.25

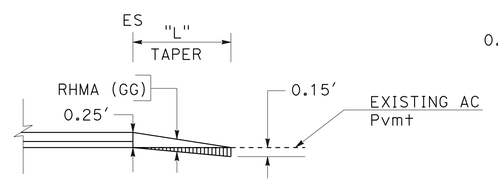

PM 30.40 TO PM 31.40
PM 26.60 TO PM 29.60
PM 18.00 TO PM 19.25

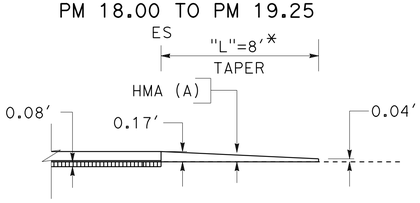

PM 13.50 TO PM 18.00

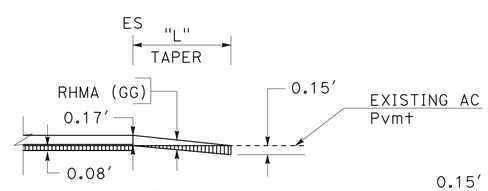

PM 13.50 TO PM 18.00

* EXCEPT WHERE SHOWN OTHERWISE SEE SHEET Q-3

PRIVATE DRIVEWAY CONFORM TAPER

PUBLIC ROAD CONFORM TAPER

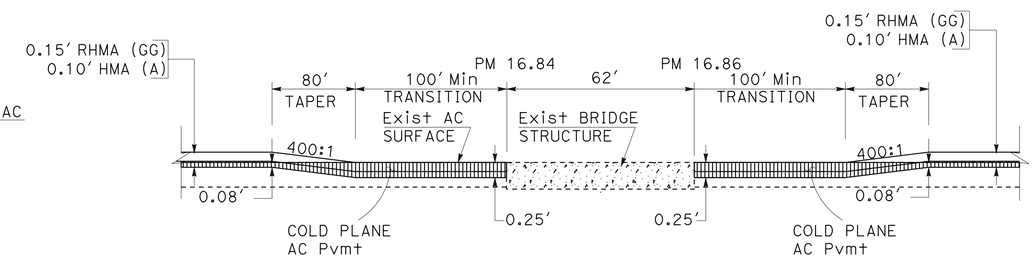

RHMA LONGITUDINAL PAVEMENT TRANSITION AT MORRISON CREEK BRIDGE (PM 16.85)

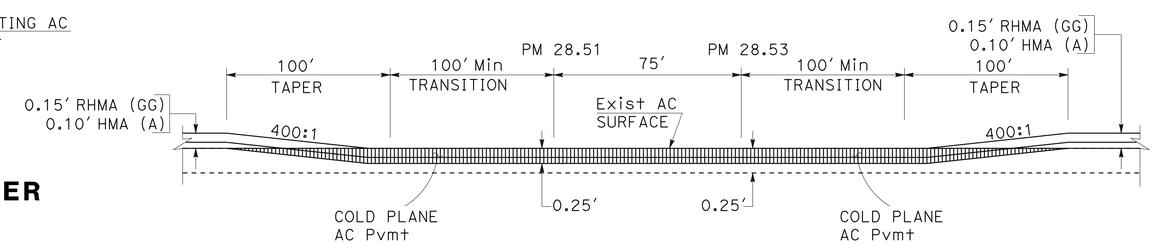

RHMA LONGITUDINAL PAVEMENT TRANSITION AT SCHINDLER CREEK RCB (PM 28.52)

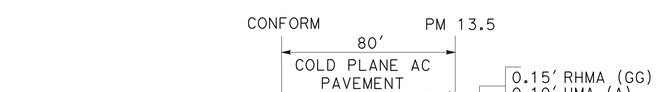

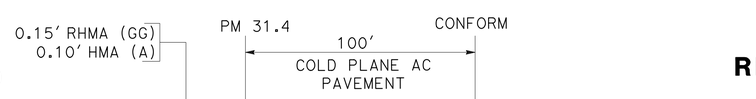

LONGITUDINAL CONFORM TAPER AT BEGIN AND END CONSTRUCTION

CONSTRUCTION DETAILS

NO SCALE

C-1

STATE OF CALIFORNIA - DEPARTMENT OF TRANSPORTATION
Caltrans® DIVISION OF ENGINEERING

FUNCTIONAL SUPERVISOR: DEANN SPANGLER
CALCULATED-DESIGNED BY: BALJINDER BRAR
CHECKED BY: JAMES P LEE
REVISED BY / DATE REVISED

LAST REVISION 3-21-14
DATE PLOTTED => 10-JUN-2014
TIME PLOTTED => 10:16

Dist	COUNTY	ROUTE	POST MILES TOTAL PROJECT	SHEET No.	TOTAL SHEETS
01	Lak	20	13.5/31.4	6	73

REGISTERED CIVIL ENGINEER 5-13-14 DATE

5-27-14
PLANS APPROVAL DATE

REGISTERED PROFESSIONAL ENGINEER BALJINDER S. BRAR No. C 67847 Exp. 6-30-15 CIVIL STATE OF CALIFORNIA

THE STATE OF CALIFORNIA OR ITS OFFICERS OR AGENTS SHALL NOT BE RESPONSIBLE FOR THE ACCURACY OR COMPLETENESS OF SCANNED COPIES OF THIS PLAN SHEET.

NOTES:

1. REINFORCING STEEL IS POTENTIALLY PRESENT IN THE EXISTING CONCRETE COLLARS.
2. FOR LOCATIONS AND DETAILS OF ADJUST FRAME AND COVER, CRACK TREATMENT SEE SUMMARY OF QUANTITY SHEETS.
3. THE CONTRACTOR SHALL COMPLETELY DEMOLISH EXISTING CONCRETE COLLARS TO A DEPTH OF 12".
4. EXISTING UTILITY FACILITIES ARE NOT SHOWN ON THESE PLANS

ABBREVIATIONS:

W - WIDTH OF ROUTING = WIDTH OF CRACK +1/4" Min
D - DEPTH OF ROUTING = W +1/4" Min
(E) - EXISTING

LEGEND:

CRACK SEALANT

CONCRETE COLLAR

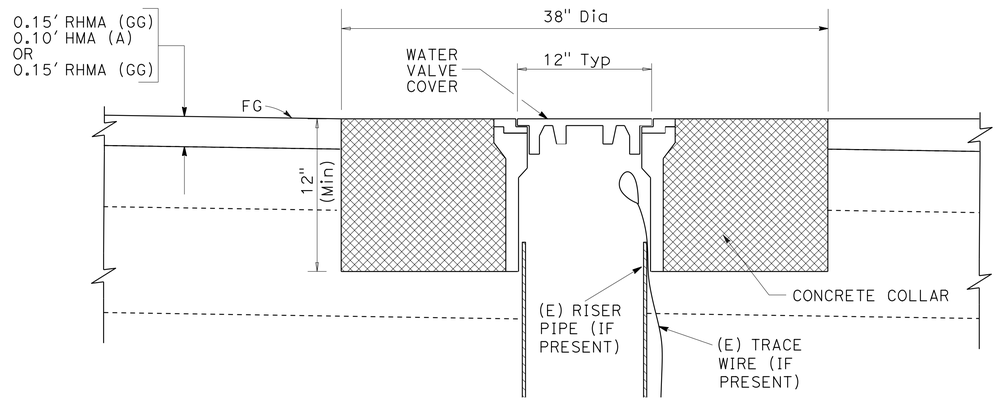

WATER VALVE

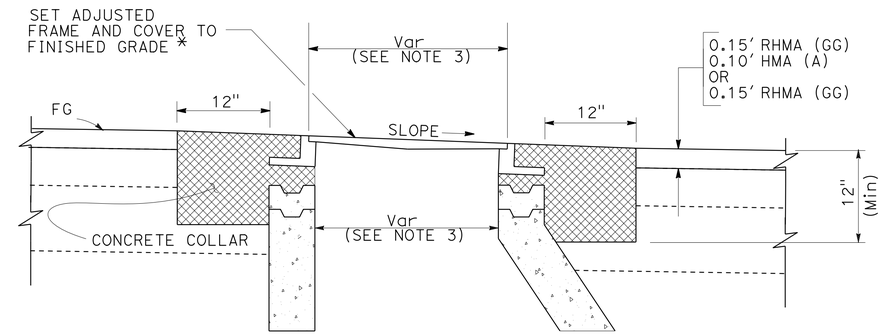

WATER/STORM/SEWER/UTILITY

* SHIMS SHALL BE PLACED UNDER THE FRAME AND COVER ON TOP OF THE HIGHEST GRADE RING AS NEEDED SUCH THAT THE FRAME AND COVER ARE FLUSH WITH THE FINISHED GRADE OF THE STREET. THE MINIMUM SHIM HEIGHT IS 1". CONCRETE SHALL BE PLACED IN BETWEEN THE HIGHEST GRADE RING AND THE SHIMMED FRAME AND LID WHEN THE CONCRETE COLLAR IS CONSTRUCTED, IN EFFECT CREATING A 'CAST-IN-PLACE' GRADE RING OF VARYING THICKNESS. ALL GRADE RINGS SHALL BE SEALED WITH NON-SHRINK GROUT ON BOTH INNER AND OUTER FACES OF EACH JOINT.

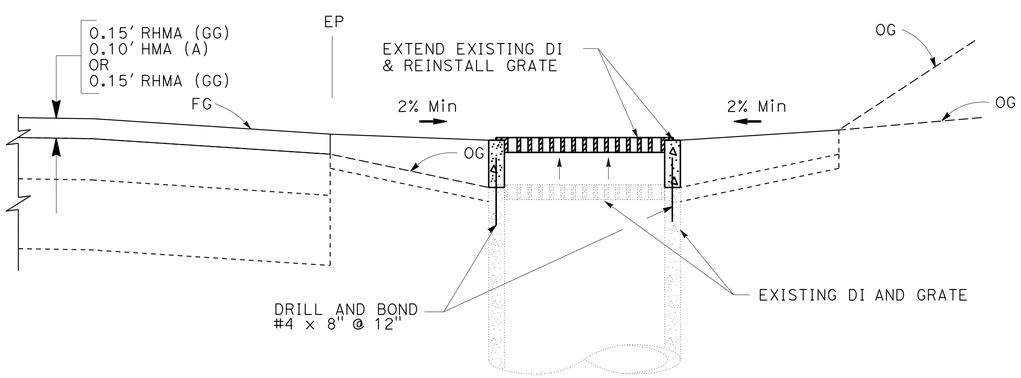

DRAINAGE INLET

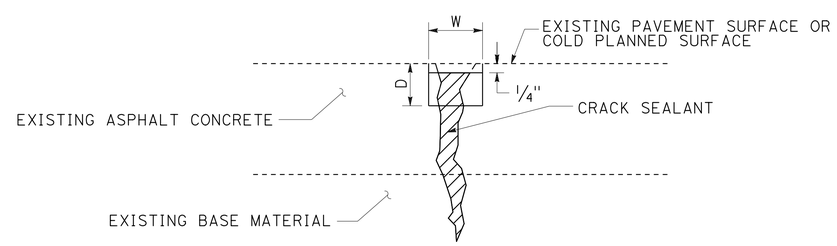

CRACK TREATMENT **

TYPICAL CROSS SECTION

** ALL CRACKS 1/4" WIDE OR GREATER ARE TO BE ROUTED AND SEALED. IF ANY PART OF CRACKS IS 1/4" OR WIDER, THEN THE ENTIRE CRACK WILL BE ROUTED AND SEALED. NO SEALANT MATERIAL WILL BE ALLOWED ON HMA PAVEMENT SURFACE.

ADJUST FRAME AND COVER TO GRADE (TYPICAL)

CONSTRUCTION DETAILS

NO SCALE

C-2

STATE OF CALIFORNIA - DEPARTMENT OF TRANSPORTATION
Caltrans® DIVISION OF ENGINEERING

FUNCTIONAL SUPERVISOR: DEANN SPANGLER
CALCULATED-DESIGNED BY: BALJINDER BRAR
CHECKED BY: JAMES P LEE
REVISED BY / DATE REVISED

LAST REVISION 3-21-14
DATE PLOTTED => 10-JUN-2014
TIME PLOTTED => 10:16

Dist	COUNTY	ROUTE	POST MILES TOTAL PROJECT	SHEET No.	TOTAL SHEETS
01	Lak	20	13.5/31.4	7	73

REGISTERED CIVIL ENGINEER 5-13-14 DATE

5-27-14
PLANS APPROVAL DATE

REGISTERED PROFESSIONAL ENGINEER BALJINDER S. BRAR No. C 67847 Exp 6-30-15 CIVIL STATE OF CALIFORNIA

THE STATE OF CALIFORNIA OR ITS OFFICERS OR AGENTS SHALL NOT BE RESPONSIBLE FOR THE ACCURACY OR COMPLETENESS OF SCANNED COPIES OF THIS PLAN SHEET.

NOTES:

1. EXISTING UTILITY FACILITIES ARE NOT SHOWN ON THESE PLANS

LEGEND:

COLD PLANE AC Pvmt

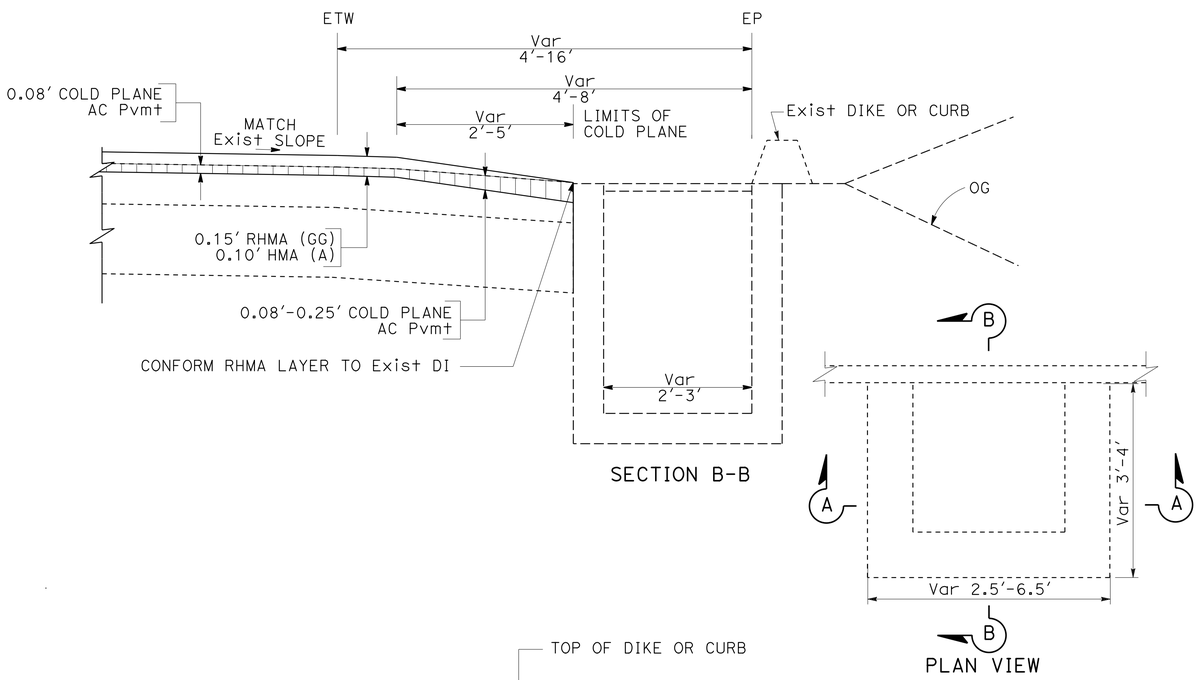

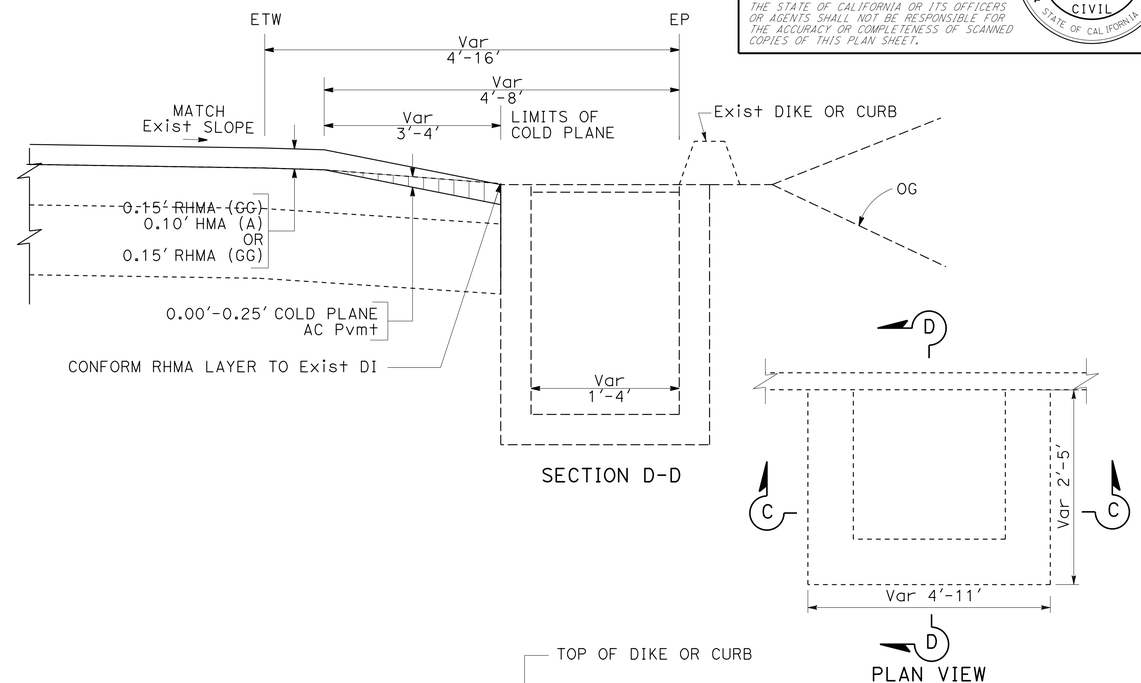

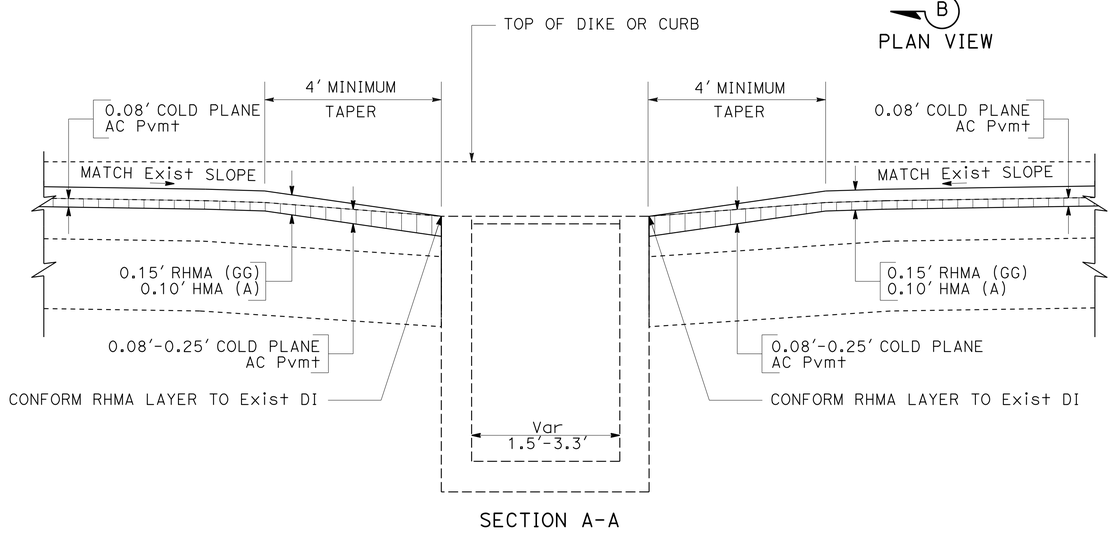

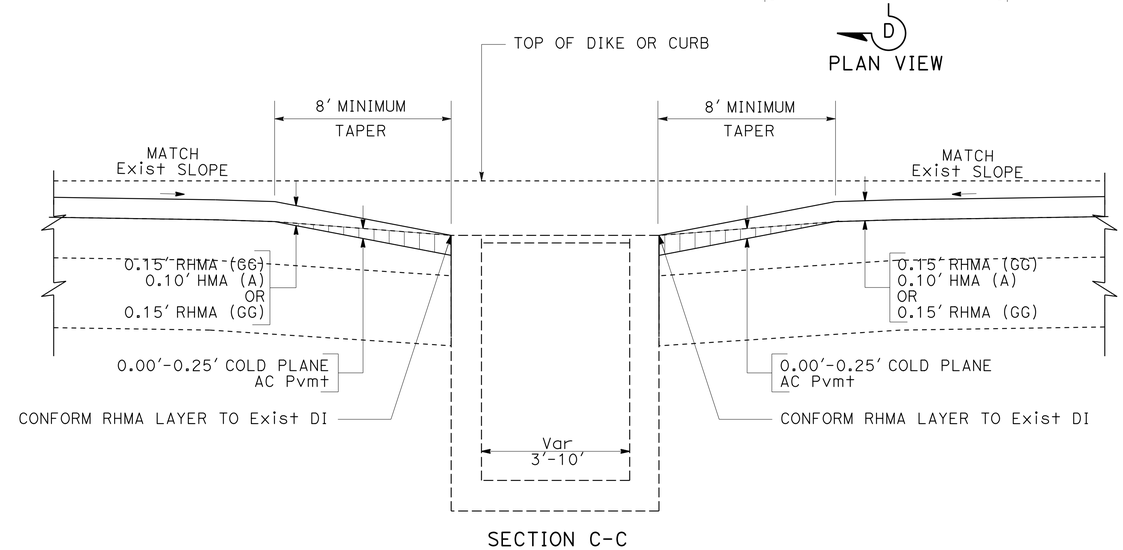

PM 13.50-PM 18.00 (EB & WB)

DRAINAGE INLETS

PM 18.00-PM 31.40 (EB & WB)

DRAINAGE INLETS

CONFORM DETAILS

EXISTING UTILITY FACILITIES ARE NOT SHOWN ON THESE PLANS

CONSTRUCTION DETAILS

NO SCALE **C-3**

STATE OF CALIFORNIA - DEPARTMENT OF TRANSPORTATION
Caltrans® DIVISION OF ENGINEERING

FUNCTIONAL SUPERVISOR: DEANN SPANGLER
CALCULATED-DESIGNED BY: BALJINDER BRAR
CHECKED BY: JAMES P LEE
REVISED BY / DATE REVISED

LAST REVISION 3-21-14
DATE PLOTTED => 10-JUN-2014
TIME PLOTTED => 10:16

Dist	COUNTY	ROUTE	POST MILES TOTAL PROJECT	SHEET No.	TOTAL SHEETS
01	Lak	20	13.5/31.4	8	73

REGISTERED CIVIL ENGINEER 5-13-14 DATE

5-27-14
PLANS APPROVAL DATE

REGISTERED PROFESSIONAL ENGINEER BALJINDER S. BRAR No. C 67847 Exp. 6-30-15 CIVIL STATE OF CALIFORNIA

THE STATE OF CALIFORNIA OR ITS OFFICERS OR AGENTS SHALL NOT BE RESPONSIBLE FOR THE ACCURACY OR COMPLETENESS OF SCANNED COPIES OF THIS PLAN SHEET.

NOTES:

1. FOR DETAILS NOT SHOWN, SEE STANDARD PLANS AND REVISED STANDARD PLANS
2. EXISTING UTILITY FACILITIES ARE NOT SHOWN ON THESE PLANS

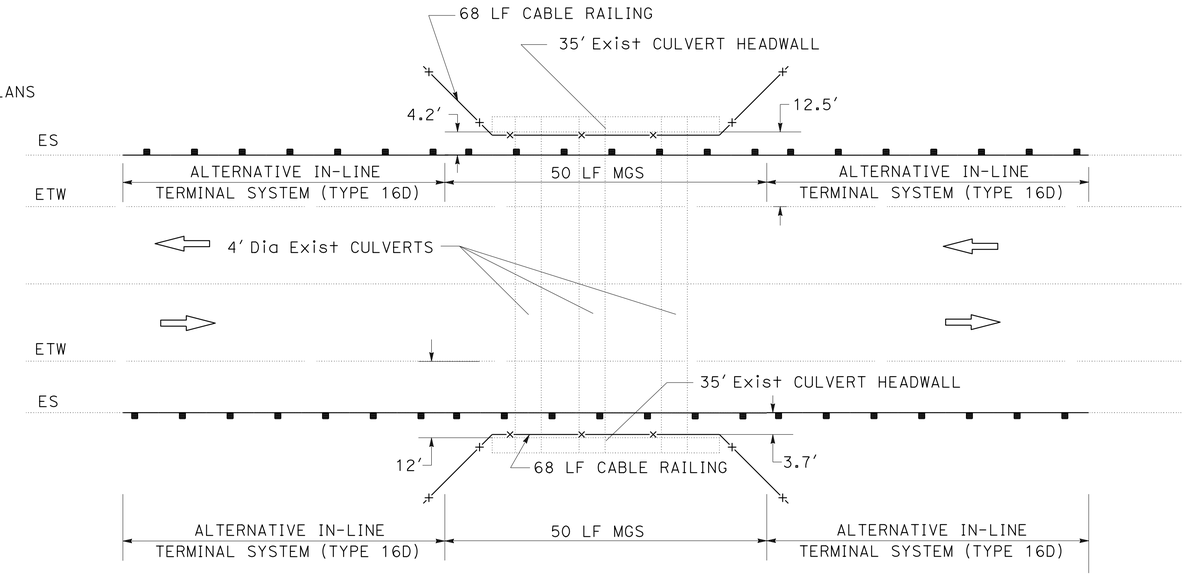

PM 29.16 (Lt/Rt)

MGS AND CABLE RAILING HEADWALLS

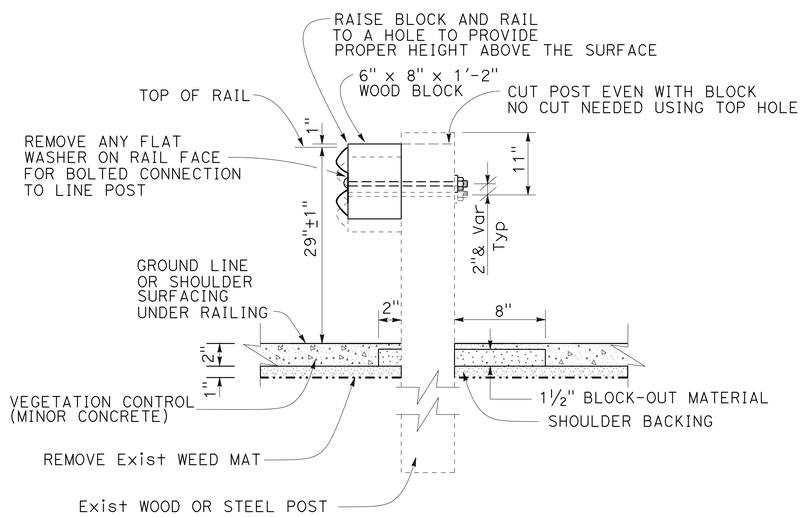

ADJUST MBGR ELEMENT

CHANGE IN RAIL ELEMENT HEIGHT 2" OR LESS

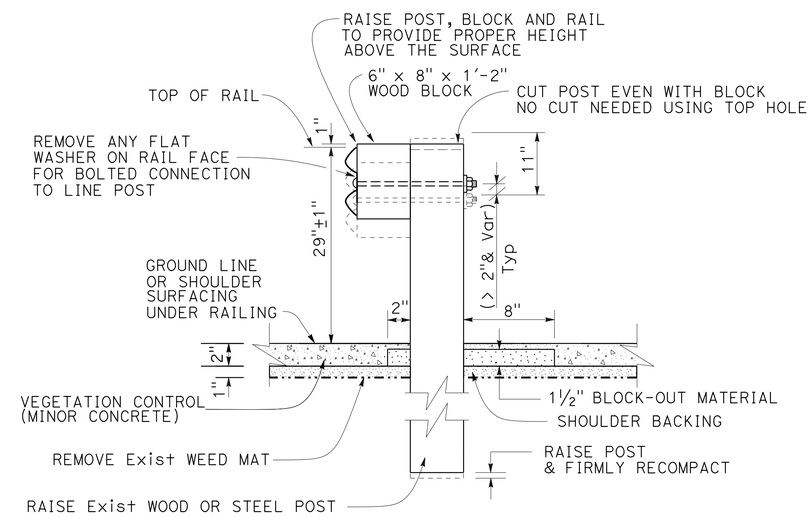

ADJUST MBGR ELEMENT

CHANGE IN RAIL ELEMENT HEIGHT > 2"

CONSTRUCTION DETAILS

NO SCALE

C-4

STATE OF CALIFORNIA - DEPARTMENT OF TRANSPORTATION
Caltrans® DIVISION OF ENGINEERING

FUNCTIONAL SUPERVISOR: DEANN SPANGLER
CALCULATED-DESIGNED BY: BALJINDER BRAR
CHECKED BY: JAMES P LEE
REVISED BY / DATE REVISED

LAST REVISION 3-21-14
DATE PLOTTED => 10-JUN-2014
TIME PLOTTED => 10:16

Dist	COUNTY	ROUTE	POST MILES TOTAL PROJECT	SHEET No.	TOTAL SHEETS
01	Lak	20	13.5/31.4	9	73

REGISTERED CIVIL ENGINEER 5-13-14 DATE

5-27-14
PLANS APPROVAL DATE

REGISTERED PROFESSIONAL ENGINEER BALJINDER S. BRAR No. C 67847 Exp 6-30-15 CIVIL STATE OF CALIFORNIA

THE STATE OF CALIFORNIA OR ITS OFFICERS OR AGENTS SHALL NOT BE RESPONSIBLE FOR THE ACCURACY OR COMPLETENESS OF SCANNED COPIES OF THIS PLAN SHEET.

NOTES:

1. RUMBLE STRIP, AS SHOWN ON THIS PLAN SHALL NOT BE CONSTRUCTED ON BRIDGE DECKS, BRIDGE APPROACH SLABS, RAMPS, PUBLIC AND PRIVATE ROAD APPROACHES AND MINOR DRIVEWAYS
2. FOR 'GROUND-IN RUMBLE STRIP' APPLICATIONS NOT SHOWN SEE STANDARD PLANS
3. EXISTING UTILITY FACILITIES ARE NOT SHOWN ON THESE PLANS

LEGEND:

▯▯▯▯▯ RUMBLE STRIP

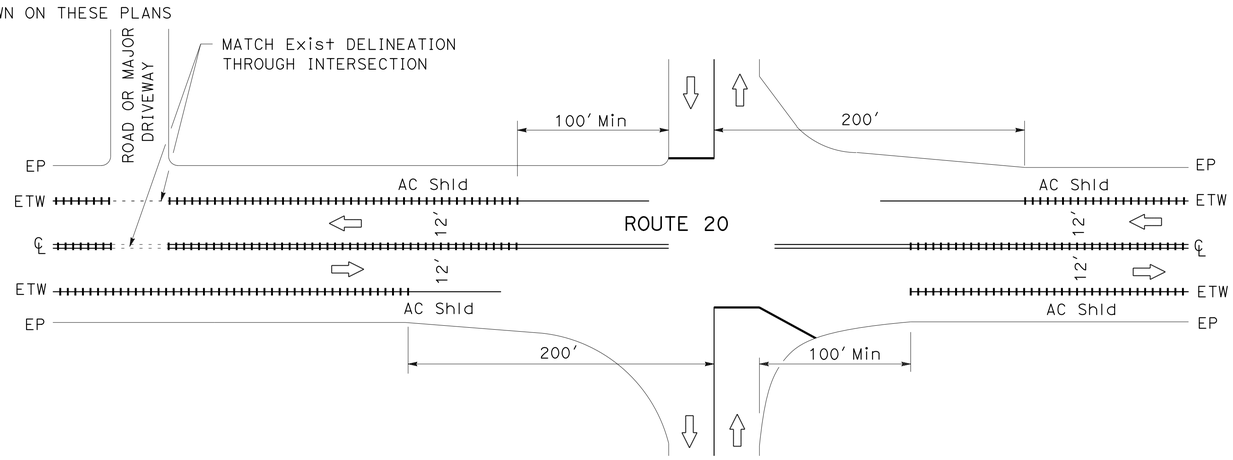

INTERSECTING ROADS AND MAJOR DRIVEWAYS

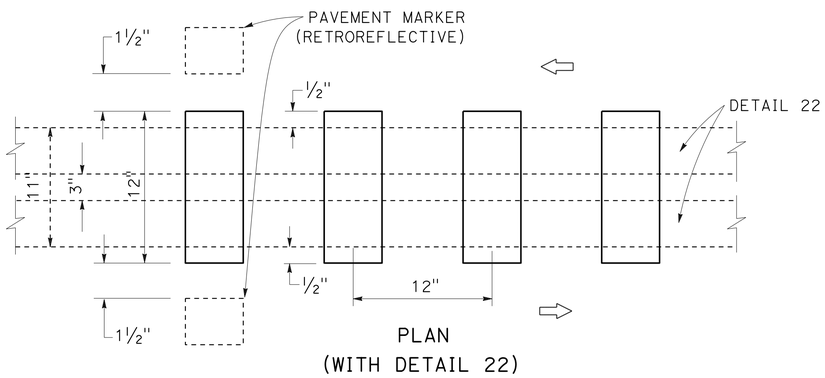

PLAN
(WITH DETAIL 22)

RUMBLE STRIP (GROUND-IN INDENTATIONS, MODIFIED)

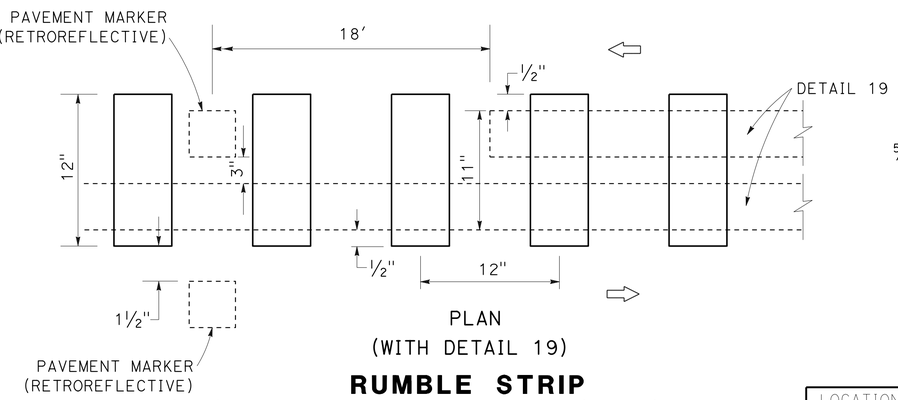

PLAN
(WITH DETAIL 19)

RUMBLE STRIP (GROUND-IN INDENTATIONS, MODIFIED)

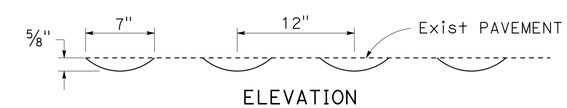

ELEVATION
(WITH DETAILS 19, 22)

LOCATION	DEPTH	
	FT	INCHES
a	0.00	0
b	0.05	1/16
c	0.16	5/32
d	0.27	9/32
e	0.31	5/16

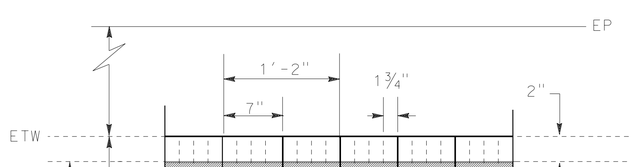

PLAN
(WITH DETAIL 27B)

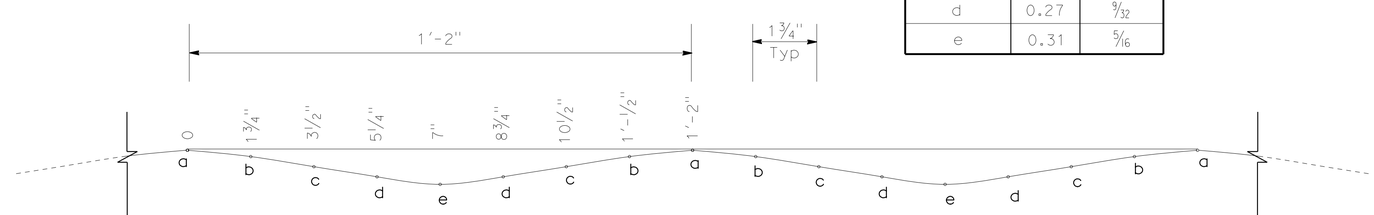

ELEVATION
(WITH DETAIL 27B)

SHOULDER RUMBLE STRIP (GROUND-IN INDENTATIONS, SINUSOIDAL)

CONSTRUCTION DETAILS

NO SCALE

C-5

STATE OF CALIFORNIA - DEPARTMENT OF TRANSPORTATION
Caltrans® DIVISION OF ENGINEERING

FUNCTIONAL SUPERVISOR: DEANN SPANGLER
CALCULATED-DESIGNED BY: BALJINDER BRAR
CHECKED BY: JAMES P LEE
REVISED BY
DATE REVISED

LAST REVISION 3-21-14
DATE PLOTTED => 10-JUN-2014
TIME PLOTTED => 10:16

Dist	COUNTY	ROUTE	POST MILES TOTAL PROJECT	SHEET No.	TOTAL SHEETS
01	Lak	20	13.5/31.4	10	73

REGISTERED CIVIL ENGINEER 5-13-14 DATE

5-27-14
PLANS APPROVAL DATE

REGISTERED PROFESSIONAL ENGINEER
BALJINDER S. BRAR
No. C 67847
Exp. 6-30-15
CIVIL
STATE OF CALIFORNIA

THE STATE OF CALIFORNIA OR ITS OFFICERS OR AGENTS SHALL NOT BE RESPONSIBLE FOR THE ACCURACY OR COMPLETENESS OF SCANNED COPIES OF THIS PLAN SHEET.

NOTE:
1. USE 15'-7½" LENGTH RAIL.

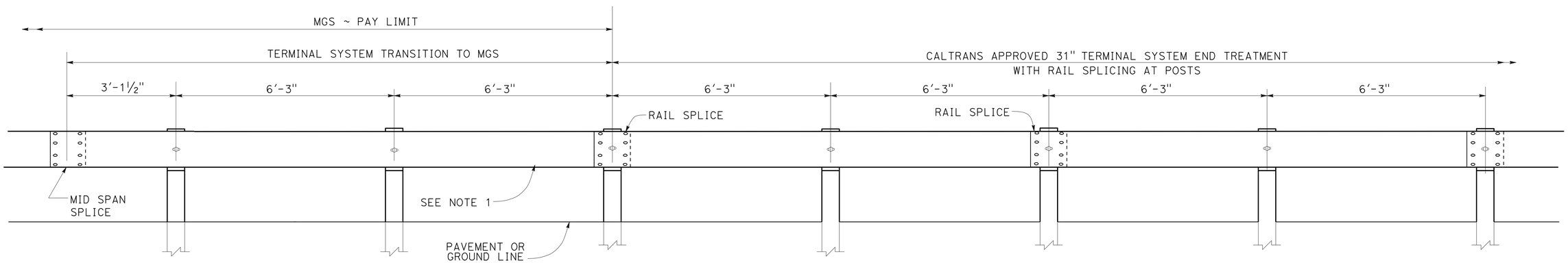

TRANSITION DETAIL FOR 31" TERMINAL SYSTEM END TREATMENT WITH RAIL SPLICING AT POSTS TO MIDWEST GUARDRAIL SYSTEM

CONSTRUCTION DETAILS

NO SCALE **C-6**

BALJINDER BRAR — REVISED BY
JAMES P LEE — DATE REVISED
CALCULATED-DESIGNED BY
CHECKED BY
FUNCTIONAL SUPERVISOR
DEANN SPANGLER

STATE OF CALIFORNIA - DEPARTMENT OF TRANSPORTATION
Caltrans® DIVISION OF ENGINEERING

LAST REVISION 3-21-14
DATE PLOTTED => 10-JUN-2014
TIME PLOTTED => 10:16

Dist	COUNTY	ROUTE	POST MILES TOTAL PROJECT	SHEET No.	TOTAL SHEETS
01	Lak	20	13.5/31.4	11	73

REGISTERED CIVIL ENGINEER 5-13-14 DATE

5-27-14
PLANS APPROVAL DATE

REGISTERED PROFESSIONAL ENGINEER BALJINDER S. BRAR No. C 67847 Exp. 6-30-15 CIVIL STATE OF CALIFORNIA

THE STATE OF CALIFORNIA OR ITS OFFICERS OR AGENTS SHALL NOT BE RESPONSIBLE FOR THE ACCURACY OR COMPLETENESS OF SCANNED COPIES OF THIS PLAN SHEET.

NOTES:

1. EXACT SIGN LOCATION TO BE DETERMINED BY THE ENGINEER.
2. FOR ADDITIONAL CONSTRUCTION AREA SIGNS, SEE SHEET CS-2

LEGEND:

(X) CONSTRUCTION AREA SIGN LETTER

<CA> CALIFORNIA SIGN CODE

SIGN - SINGLE POST

SIGN - TWO POST

STATIONARY MOUNTED CONSTRUCTION AREA SIGNS

SIGN LETTER	SIGN CODE FEDERAL	SIGN CODE CALIFORNIA	PANEL SIZE	SIGN MESSAGE	NUMBER OF POST AND SIZE	NUMBER OF SIGNS
A		C40	108" x 42"	TRAFFIC FINES DOUBLED IN CONSTRUCTION ZONES	2 - 6" x 6"	3
B	G20-1		60" x 36"	ROAD CONSTRUCTION NEXT 20 MILES	2 - 4" x 6"	3
C	W11-1		36" x 36"	BICYCLE SYMBOL	1 - 4" X 6"	3
	W16-1P		24" x 30"	SHARE THE ROAD		
D	G20-2		36" x 18"	END ROAD WORK	1 - 4" x 4"	3
E	W20-1	C23	36" x 36"	ROAD WORK AHEAD	1 - 4" x 6"	115

(N) - NOT A SEPARATE PAY ITEM, FOR INFORMATION ONLY

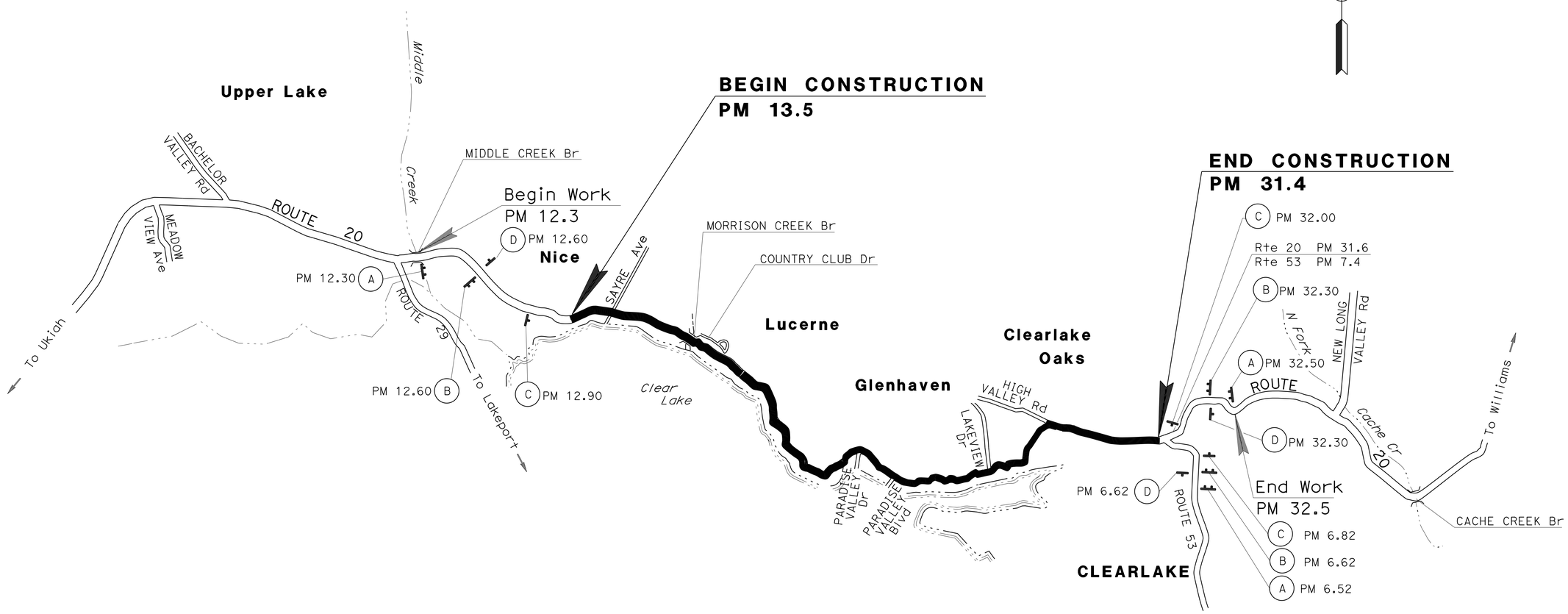

CONSTRUCTION AREA SIGNS

NO SCALE

CS-1

APPROVED FOR CONSTRUCTION AREA SIGN WORK ONLY

STATE OF CALIFORNIA - DEPARTMENT OF TRANSPORTATION
Caltrans DIVISION OF ENGINEERING

FUNCTIONAL SUPERVISOR: DEANN SPANGLER
CALCULATED-DESIGNED BY: BALJINDER BRAR
CHECKED BY: JAMES P LEE
REVISED BY / DATE REVISED

LAST REVISION 3-21-14
DATE PLOTTED => 10-JUN-2014
TIME PLOTTED => 10:16

Dist	COUNTY	ROUTE	POST MILES TOTAL PROJECT	SHEET No.	TOTAL SHEETS
01	Lak	20	13.5/31.4	12	73

REGISTERED CIVIL ENGINEER 5-13-14 DATE

5-27-14
PLANS APPROVAL DATE

REGISTERED PROFESSIONAL ENGINEER BALJINDER S. BRAR No. C 67847 Exp 6-30-15 CIVIL STATE OF CALIFORNIA

THE STATE OF CALIFORNIA OR ITS OFFICERS OR AGENTS SHALL NOT BE RESPONSIBLE FOR THE ACCURACY OR COMPLETENESS OF SCANNED COPIES OF THIS PLAN SHEET.

STATIONARY MOUNTED CONSTRUCTION AREA SIGNS *

LOCATION			SIGN LETTER	SIGN CODE	
PM	SIDE Lt/Rt	DESCRIPTION	(X)	FEDERAL	CALIFORNIA
13.58	Lt/Rt	SAYRE Ave	E	W20-1	C23
13.65	Lt	LEVY Ave	E	W20-1	C23
13.70	Lt	KEELING Ave	E	W20-1	C23
13.76	Lt	CRUMP Ave	E	W20-1	C23
13.76	Lt	MANZANITA Ave	E	W20-1	C23
13.84	Lt/Rt	HOWARD St	E	W20-1	C23
13.97	Rt	BENTON Ave	E	W20-1	C23
14.02	Lt/Rt	HUDSON Ave	E	W20-1	C23
14.26	Lt	MANZANITA Ave	E	W20-1	C23
14.30	Lt/Rt	ROBINSON Ave/HOWES St	E	W20-1	C23
14.38	Lt	BURPEE Dr	E	W20-1	C23
14.45	Lt	HUTCHINS Rd	E	W20-1	C23
14.60	Rt	LAKESHORE Blvd	E	W20-1	C23
14.63	Rt	UNNAMED STREET	E	W20-1	C23
14.94	Rt	UNNAMED STREET	E	W20-1	C23
15.07	Rt	UNNAMED STREET	E	W20-1	C23
15.29	Lt	BARTLETT SPRINGS Rd	E	W20-1	C23
15.64	Lt/Rt	ELIOT WAY/STANFORD Ave	E	W20-1	C23
16.57	Lt	FOOTHILL Dr	E	W20-1	C23
16.64	Lt	GROVE St	E	W20-1	C23
16.75	Lt	MOBILE HOME PARK	E	W20-1	C23
16.87	Rt	LAKE Ave	E	W20-1	C23
16.89	Lt	FIRST Ave	E	W20-1	C23
16.94	Lt	SECOND Ave	E	W20-1	C23
17.00	Lt	THIRD Ave	E	W20-1	C23
17.05	Lt	FOURTH Ave	E	W20-1	C23
17.12	Lt	FIFTH Ave	E	W20-1	C23
17.18	Lt	SIXTH Ave	E	W20-1	C23
17.24	Lt	SEVENTH Ave	E	W20-1	C23
17.29	Lt	EIGHTH Ave	E	W20-1	C23
17.32	Lt	NINTH Ave	E	W20-1	C23
17.38	Lt	TENTH Ave	E	W20-1	C23
17.44	Lt	ELEVENTH Ave	E	W20-1	C23
17.50	Lt	TWELFTH Ave	E	W20-1	C23
17.56	Lt	THIRTEENTH Ave	E	W20-1	C23
17.62	Lt	FOURTEENTH Ave	E	W20-1	C23
17.68	Lt	FIFTEENTH Ave	E	W20-1	C23
17.74	Lt	SIXTEENTH Ave	E	W20-1	C23
17.80	Lt	SEVENTEENTH Ave	E	W20-1	C23
17.93	Lt	COUNTRY CLUB Rd	E	W20-1	C23
18.01	Lt	OGDEN Rd	E	W20-1	C23
18.32	Lt	LAKESHORE Blvd	E	W20-1	C23
18.48	Lt	RANCHO VISTA Rd	E	W20-1	C23
18.58	Lt	BELL RAY Ave	E	W20-1	C23
18.71	Lt	BENDER Dr	E	W20-1	C23
18.88	Lt	OAK CREST Ave	E	W20-1	C23
19.04	Lt	LAUREL DELL Ave	E	W20-1	C23
19.18	Lt	ROSEMONT Dr	E	W20-1	C23
21.09	Lt	BRUNER Rd	E	W20-1	C23
21.31	Lt	DIANE CT	E	W20-1	C23
21.82	Rt	CORA Dr	E	W20-1	C23
21.86	Lt	VERNA WAY	E	W20-1	C23
22.59	Rt	ENTRANCE PARADISE COVE SUBDIVISION	E	W20-1	C23

LOCATION			SIGN LETTER	SIGN CODE	
PM	SIDE Lt/Rt	DESCRIPTION	(X)	FEDERAL	CALIFORNIA
23.17	Rt	UNNAMED St	E	W20-1	C23
23.83	Lt	GLADYS St	E	W20-1	C23
23.96	Lt	MARY St	E	W20-1	C23
24.20	Lt	LINDEN Ln	E	W20-1	C23
24.27	Rt	HARBOR Dr	E	W20-1	C23
24.31	Rt	GLENHAVEN POINT	E	W20-1	C23
24.43	Lt	GLENHAVEN Dr	E	W20-1	C23
24.83	Lt	HARVEY Blvd	E	W20-1	C23
24.99	Lt	MITCHELL Rd	E	W20-1	C23
25.44	Lt	HENDERSON Dr	E	W20-1	C23
25.53	Lt	SPRING Rd	E	W20-1	C23
25.63	Lt	SWANSON Rd	E	W20-1	C23
25.78	Lt	OLSON Rd	E	W20-1	C23
26.15	Lt	PINGREE Rd	E	W20-1	C23
26.45	Lt	LAKE VIEW DRIVE	E	W20-1	C23
26.62	Lt	BERYL WAY	E	W20-1	C23
26.67	Rt	GARDEN Ct	E	W20-1	C23
26.77	Lt	PRIVATE Rd	E	W20-1	C23
27.05	Lt	HILLSIDE Ln	E	W20-1	C23
27.06	Rt	CHARLES WAY	E	W20-1	C23
27.62	Rt	ISLAND Dr	E	W20-1	C23
27.70	Lt	SHADY Ln	E	W20-1	C23
27.77	Lt	FOOTHILL Blvd	E	W20-1	C23
27.80	Rt	SHORT St	E	W20-1	C23
27.84	Lt	PINE St	E	W20-1	C23
27.87	Rt	SHORT St	E	W20-1	C23
27.89	Lt	ACORN St	E	W20-1	C23
27.92	Lt	PRIVATE St	E	W20-1	C23
27.98	Lt	FOOTHILL Blvd	E	W20-1	C23
28.02	Lt	OAK GROVE Ave	E	W20-1	C23
28.21	Lt/Rt	OAK GROVE Ave/LAKE St	E	W20-1	C23
28.33	Rt	SHAUL St	E	W20-1	C23
28.42	Lt	HIGH VALLEY Rd	E	W20-1	C23
28.46	Lt	CALTRANS Maint YARD	E	W20-1	C23
28.49	Rt	SCHINDLER St	E	W20-1	C23
28.54	Rt	BUTLER St	E	W20-1	C23
28.65	Rt	COMMERCIAL Dwy	E	W20-1	C23
28.70	Rt	HOOVER St	E	W20-1	C23
28.84	Rt	KEYS Blvd	E	W20-1	C23
29.35	Rt	ORCHARD SHORES	E	W20-1	C23
29.54	Lt/Rt	SULPHUR BANK Dr	E	W20-1	C23
29.61	Lt	PRIVATE Rd	E	W20-1	C23
29.84	Lt	MORINE RANCH Rd	E	W20-1	C23
29.92	Lt/Rt	MORINE WAY/MILANO Ct	E	W20-1	C23
30.11	Lt	MORINE RANCH Rd	E	W20-1	C23
30.43	Rt	CATHOLIC CHURCH Rd	E	W20-1	C23
30.58	Rt	WHISNER Ln	E	W20-1	C23
30.68	Lt/Rt	RED ROCK Rd/WHISNER Ct	E	W20-1	C23
30.82	Rt	PRIVATE Rd	E	W20-1	C23
30.88	Rt	PRIVATE Rd	E	W20-1	C23
30.90	Lt	PRIVATE Rd	E	W20-1	C23
31.37	Rt	Y Rd	E	W20-1	C23

* QUANTITIES INCLUDED IN CONSTRUCTION AREA SIGNS SHEET CS-1

CONSTRUCTION AREA SIGNS

CS-2

REVISED BY | DATE REVISED

BALJINDER BRAR | JAMES P LEE

CALCULATED-DESIGNED BY | CHECKED BY

FUNCTIONAL SUPERVISOR: DEANN SPANGLER

STATE OF CALIFORNIA - DEPARTMENT OF TRANSPORTATION
Caltrans DIVISION OF ENGINEERING

LAST REVISION 3-21-14 | DATE PLOTTED => 10-JUN-2014 | TIME PLOTTED => 10:16

(N) - NOT A SEPARATE PAY ITEM, FOR INFORMATION ONLY

PAVEMENT DELINEATION

LOCATION (PM) FROM	LOCATION (PM) TO	SIDE L+/R+	DETAIL No.	(N) DETAIL LENGTH LF	8" THERMOPLASTIC TRAFFIC STRIPE WHITE SOLID LF	4" THERMOPLASTIC TRAFFIC STRIPE WHITE SOLID LF	4" THERMOPLASTIC TRAFFIC STRIPE YELLOW SOLID LF	4" THERMOPLASTIC TRAFFIC STRIPE (BROKEN 12-3) WHITE LF	4" THERMOPLASTIC TRAFFIC STRIPE (BROKEN 36-12) YELLOW LF	PAVEMENT MARKER (RETROREFLECTIVE) RECESSED TYPE D YELLOW (TWO WAY) EA	PAVEMENT MARKER (RETROREFLECTIVE) RECESSED TYPE H YELLOW (ONE WAY) EA	PAVEMENT MARKER (RETROREFLECTIVE) TYPE D YELLOW (TWO WAY) EA	PAVEMENT MARKER (RETROREFLECTIVE) TYPE G CLEAR (ONE WAY) EA	PAVEMENT MARKER (RETROREFLECTIVE) TYPE H YELLOW (ONE WAY) EA	REMARKS
13.50	13.58	L+	21	18			36								TO SAYRE Ave
		R+	21	18			36								
		L+	27B	406		406									
		R+	27B	393		393									
		L+	27C	62				62							
		R+	27C	48				48							
		Med	32	402			804		804			44			
13.58	13.65	L+	21	20			40								SAYRE Ave TO LEVY Ave
		L+	27B	275		275									
		R+	27B	340		340									
		L+	27C	50				50							
		Med	32	301			602		602			33			
13.65	13.70	L+	21	18			36								LEVY Ave TO KEELING Ave
		L+	27B	186		186									
		R+	27B	270		270									
		L+	27C	74				74							
		Med	32	271			542		542			31			
13.70	13.76	L+	21	20			40								KEELING Ave TO CRUMP Ave
		L+	27B	224		224									
		R+	27B	277		277									
		L+	27C	126				126							
		Med	32	238			476		476			27			
13.76	13.84	L+	21	20			40								CRUMP Ave TO HOWARd St
		R+	21	20			40								
		L+	27B	436		436									
		R+	27B	380		380									
		L+	27C	68				68							
		R+	27C	89				89							
		Med	32	406			812		812			45			
13.84	13.97	R+	21	20			40								HOWARd St TO BENTON Ave
		L+	27B	690		690									
		R+	27B	633		633									
		R+	27C	57				57							
		Med	32	672			1,344		1,344			73			
13.97	14.02	L+	21	12			24								BENTON Ave TO HUDSON Ave
		R+	21	12			24								
		L+	27B	194		194									
		R+	27B	178		178									
		L+	27C	56				56							
		R+	27C	56				56							
		Med	32	194			388		388			23			
14.02	14.26	L+	21	20			40								HUDSON Ave TO DAWS Ave
		L+	27B	1,164		1,164									
		R+	27B	1,284		1,284									
		L+	27C	236				236							
		Med	32	1,198			2,396		2,396			128			
14.26	14.38	L+	21	20			40								DAWS Ave TO BURPEE Dr
		L+	27B	422		422									
		R+	27B	638		638									
		L+	27C	106				106							
		Med	32	576			1152		1152			63			
14.38	14.45	Med	22	281			562					24			BURPEE Dr TO HUTCHINS Rd
		L+	27B	698		698									250 FT TAPER Beg PM 13.95
		R+	27B	768		768									
		L+	27C	60				60							
		Med	29	250			1000					20			
		Med	32	185			370		370			23			
SUBTOTAL						9,856	10,884	1,088	8,886			534			

Dist	COUNTY	ROUTE	POST MILES TOTAL PROJECT	SHEET No.	TOTAL SHEETS
01	Lak	20	13.5/31.4	13	73

REGISTERED CIVIL ENGINEER 5-13-14 DATE

5-27-14
PLANS APPROVAL DATE

REGISTERED PROFESSIONAL ENGINEER BALJINDER S. BRAR No. C 67847 Exp 6-30-15 CIVIL STATE OF CALIFORNIA

THE STATE OF CALIFORNIA OR ITS OFFICERS OR AGENTS SHALL NOT BE RESPONSIBLE FOR THE ACCURACY OR COMPLETENESS OF SCANNED COPIES OF THIS PLAN SHEET.

REVISED BY | DATE REVISED
BALJINDER BRAR | JAMES P LEE
CALCULATED-DESIGNED BY | CHECKED BY
FUNCTIONAL SUPERVISOR: DEANN SPANGLER

STATE OF CALIFORNIA - DEPARTMENT OF TRANSPORTATION
Caltrans DIVISION OF ENGINEERING

PAVEMENT DELINEATION QUANTITIES

PDQ-1

LAST REVISION 3-21-14 | DATE PLOTTED => 10-JUN-2014 | TIME PLOTTED => 10:16

(N) - NOT A SEPARATE PAY ITEM, FOR INFORMATION ONLY

PAVEMENT DELINEATION

Dist	COUNTY	ROUTE	POST MILES TOTAL PROJECT	SHEET No.	TOTAL SHEETS
01	Lak	20	13.5/31.4	14	73

REGISTERED CIVIL ENGINEER 5-13-14 DATE

5-27-14
PLANS APPROVAL DATE

REGISTERED PROFESSIONAL ENGINEER BALJINDER S. BRAR No. C 67847 Exp 6-30-15 CIVIL STATE OF CALIFORNIA

THE STATE OF CALIFORNIA OR ITS OFFICERS OR AGENTS SHALL NOT BE RESPONSIBLE FOR THE ACCURACY OR COMPLETENESS OF SCANNED COPIES OF THIS PLAN SHEET.

LOCATION (PM) FROM	LOCATION (PM) TO	SIDE L+/R+	DETAIL No.	(N) DETAIL LENGTH LF	8" THERMOPLASTIC TRAFFIC STRIPE WHITE SOLID LF	4" THERMOPLASTIC TRAFFIC STRIPE WHITE SOLID LF	4" THERMOPLASTIC TRAFFIC STRIPE YELLOW SOLID LF	4" THERMOPLASTIC TRAFFIC STRIPE (BROKEN 12-3) WHITE LF	4" THERMOPLASTIC TRAFFIC STRIPE (BROKEN 36-12) YELLOW LF	PAVEMENT MARKER (RETROREFLECTIVE) RECESSED TYPE D YELLOW (TWO WAY) EA	PAVEMENT MARKER (RETROREFLECTIVE) RECESSED TYPE H YELLOW (ONE WAY) EA	PAVEMENT MARKER (RETROREFLECTIVE) TYPE D YELLOW (TWO WAY) EA	PAVEMENT MARKER (RETROREFLECTIVE) TYPE G CLEAR (ONE WAY) EA	PAVEMENT MARKER (RETROREFLECTIVE) TYPE H YELLOW (ONE WAY) EA	REMARKS
14.45	14.60	Med	22	296			592					26			HUTCHINS Rd TO LAKESHORE Blvd
		L+	27B	326		326									
		R+	27B	272		272									
		R+	27C	54				54							
14.60	15.29	L+	21	20			40								LAKESHORE Blvd TO BARTLETT SPR Rd
		Med	22	3,630			7,260					302			
		L+	27B	3,586		3,586									
		R+	27B	3,660		3,660									
		L+	27C	98				98							
15.29	16.57	Med	19	480			480		480			11		21	BARTLETT SPR Rd TO FOOTHILL Dr
		Med	6	948					948			41			
		Med	19	710			710		710			15		30	
		Med	6	948					948			19			
		Med	19	372			372		372			8		16	
		Med	22	3,117			6,234					260			
		L+	27B	6,463		6,463									
		R+	27B	6,642		6,642									
		L+	27C	272				272							
		L+	21	20			40								
16.57	16.64	L+	21	20			40								FOOTHILL Dr TO GROVE St
		Med	22	356			712					32			
		L+	27B	172		172									
		R+	27B	398		398									
		L+	27C	170				170							
16.64	16.69	Med	22	295			590					26			GROVE St TO DRIVEWAY
		L+	27B	190		190									
		R+	27B	334		334									
		L+	27C	150				150							
16.69	16.75	Med	22	292			584					26			DRIVEWAY TO MOBILE HOME PARK
		L+	27B	240		240									
		R+	27B	350		350									
		L+	27C	87				87							
16.75	16.82	Med	22	373			746					34			MOBILE HOME PARK TO EB MORRISON Cr
		L+	27B	341		341									
		R+	27B	375		375									
16.82	16.84	R+	21	20			40								MORRISON CREEK Br TO LAKE St
		Med	22	12			24								
		L+	27B	116		116									
		R+	27B	72		72									
		R+	27C	64				64							
		Med	29	84			336					8			
16.84	16.89	L+	21	20			40								LAKE St TO FIRST St
		L+	27B	168		168									
		R+	27B	210		210									
		L+	27C	58				58							
		Med	32	186			372		372			20			
16.89	16.94	L+	21	20			40								FIRST St TO SECOND St
		L+	27B	230		230									
		R+	27B	290		290									
		L+	27C	60				60							
		Med	32	238			476		476			26			
16.94	17.00	L+	21	15			30								SECOND St TO THIRD St
		L+	27B	232		232									
		R+	27B	280		280									
		L+	27C	64				64							
		Med	32	232			464		464			26			
SUBTOTAL						24,947	20,222	1,077	4,770			880		67	

STATE OF CALIFORNIA - DEPARTMENT OF TRANSPORTATION
Caltrans® DIVISION OF ENGINEERING

FUNCTIONAL SUPERVISOR: DEANN SPANGLER

CALCULATED-DESIGNED BY: BALJINDER BRAR
CHECKED BY: JAMES P LEE

REVISED BY
DATE REVISED

PAVEMENT DELINEATION QUANTITIES

PDQ-2

LAST REVISION 3-21-14
DATE PLOTTED => 10-JUN-2014
TIME PLOTTED => 10:16

(N) - NOT A SEPARATE PAY ITEM, FOR INFORMATION ONLY

PAVEMENT DELINEATION

LOCATION (PM) FROM	LOCATION (PM) TO	SIDE L+/R+	DETAIL No.	(N) DETAIL LENGTH LF	8" THERMOPLASTIC TRAFFIC STRIPE WHITE SOLID LF	4" THERMOPLASTIC TRAFFIC STRIPE WHITE SOLID LF	4" THERMOPLASTIC TRAFFIC STRIPE YELLOW SOLID LF	4" THERMOPLASTIC TRAFFIC STRIPE (BROKEN 12-3) WHITE LF	4" THERMOPLASTIC TRAFFIC STRIPE (BROKEN 36-12) YELLOW LF	PAVEMENT MARKER (RETROREFLECTIVE) RECESSED TYPE D YELLOW (TWO WAY) EA	PAVEMENT MARKER (RETROREFLECTIVE) RECESSED TYPE H YELLOW (ONE WAY) EA	PAVEMENT MARKER (RETROREFLECTIVE) TYPE D YELLOW (TWO WAY) EA	PAVEMENT MARKER (RETROREFLECTIVE) TYPE G CLEAR (ONE WAY) EA	PAVEMENT MARKER (RETROREFLECTIVE) TYPE H YELLOW (ONE WAY) EA	REMARKS
17.00	17.05	L+	21	12			24								THIRD S+ TO FOURTH S+
		L+	27B	230		230									
		R+	27B	264		264									
		L+	27C	56				56							
		Med	32	244			488		488			26			
17.05	17.12	L+	21	21			42								FOURTH S+ TO FIFTH S+
		L+	27B	250		250									
		R+	27B	322		322									
		L+	27C	70				70							
		Med	32	264			528		528			28			
17.12	17.18	L+	21	20			40								FIFTH S+ TO SIXTH S+
		L+	27B	262		262									
		R+	27B	322		322									
		L+	27C	66				66							
		Med	32	280			560		560			29			
17.18	17.24	L+	21	20			40								SIXTH S+ TO SEVENTH S+
		L+	27B	276		276									
		R+	27B	336		336									
		L+	27C	64				64							
		Med	32	280			560		560			29			
17.24	17.29	L+	21	25			50								SEVENTH S+ TO EIGHTH S+
		L+	27B	242		242									
		R+	27B	205		205									
		L+	27C	40				40							
		R+	27C	58				58							
		Med	32	244			488		488			51			
17.29	17.32	L+	21	25			50								EIGHTH S+ TO NINTH S+
		L+	27B	108		108									
		R+	27B	108		108									
		L+	27C	25				25							
		R+	27C	35				35							
		Med	32	108			216		216			11			
17.32	17.38	L+	21	25			50								NINTH S+ TO TENTH S+
		L+	27B	242		242									
		R+	27B	285		285									
		L+	27C	46				46							
		Med	32	242			484		484			31			
17.38	17.44	Med	21	23			46								TENTH TO ELEVENTH S+
		L+	27B	250		250									
		R+	27B	303		303									
		L+	27C	56				56							
		Med	32	264			528		528			28			
17.44	17.50	L+	21	23			46								ELEVENTH S+ TO TWELFTH S+
		L+	27B	248		248									
		R+	27B	300		300									
		L+	27C	60				60							
		Med	32	270			540		540			28			
17.50	17.56	L+	21	25			50								TWELFTH S+ TO THIRTEENTH S+
		L+	27B	256		256									
		R+	27B	360		360									
		L+	27C	82				82							
		Med	32	270			540		540			28			
17.56	17.62	L+	21	30			60								THIRTEENTH S+ TO FOURTEENTH S+
		L+	27B	252		252									
		R+	27B	325		325									
		L+	27C	60				60							
		Med	32	260			520		520			27			
SUBTOTAL						5,746	5,950	718	5,452			316			

Dist	COUNTY	ROUTE	POST MILES TOTAL PROJECT	SHEET No.	TOTAL SHEETS
01	Lak	20	13.5/31.4	15	73

REGISTERED CIVIL ENGINEER 5-13-14 DATE

5-27-14
PLANS APPROVAL DATE

REGISTERED PROFESSIONAL ENGINEER BALJINDER S. BRAR No. C 67847 Exp. 6-30-15 CIVIL STATE OF CALIFORNIA

THE STATE OF CALIFORNIA OR ITS OFFICERS OR AGENTS SHALL NOT BE RESPONSIBLE FOR THE ACCURACY OR COMPLETENESS OF SCANNED COPIES OF THIS PLAN SHEET.

REVISED BY | DATE REVISED

BALJINDER BRAR | JAMES P LEE

CALCULATED-DESIGNED BY | CHECKED BY

FUNCTIONAL SUPERVISOR: DEANN SPANGLER

STATE OF CALIFORNIA - DEPARTMENT OF TRANSPORTATION
Caltrans DIVISION OF ENGINEERING

PAVEMENT DELINEATION QUANTITIES

PDQ-3

LAST REVISION 3-21-14 | DATE PLOTTED => 10-JUN-2014 | TIME PLOTTED => 10:16

(N) - NOT A SEPARATE PAY ITEM, FOR INFORMATION ONLY

PAVEMENT DELINEATION

LOCATION (PM) FROM	LOCATION (PM) TO	SIDE L+/R+	DETAIL No.	(N) DETAIL LENGTH LF	8" THERMOPLASTIC TRAFFIC STRIPE WHITE SOLID LF	4" THERMOPLASTIC TRAFFIC STRIPE WHITE SOLID LF	4" THERMOPLASTIC TRAFFIC STRIPE YELLOW SOLID LF	4" THERMOPLASTIC TRAFFIC STRIPE (BROKEN 12-3) WHITE LF	4" THERMOPLASTIC TRAFFIC STRIPE (BROKEN 36-12) YELLOW LF	PAVEMENT MARKER (RETROREFLECTIVE) RECESSED TYPE D YELLOW (TWO WAY) EA	PAVEMENT MARKER (RETROREFLECTIVE) RECESSED TYPE H YELLOW (ONE WAY) EA	PAVEMENT MARKER (RETROREFLECTIVE) TYPE D YELLOW (TWO WAY) EA	PAVEMENT MARKER (RETROREFLECTIVE) TYPE G CLEAR (ONE WAY) EA	PAVEMENT MARKER (RETROREFLECTIVE) TYPE H YELLOW (ONE WAY) EA	REMARKS
17.62	17.68	L+	21	30			60								FOURTEENTH St TO FIFTEENTH St
		L+	27B	246		246									
		R+	27B	304		304									
		L+	27C	66				66							
		Med	32	260			520		520			27			
17.68	17.74	L+	21	30			60								FIFTEENTH St TO SIXTEENTH St
		L+	27B	236		236									
		R+	27B	278		278									
		L+	27C	52				52							
		Med	32	247			494		494			26			
17.74	17.80	L+	21	30			60								SIXTEENTH St TO SEVENTEENTH St
		L+	27B	254		254									
		R+	27B	306		306									
		L+	27C	50				50							
		Med	32	268			536		536			28			
17.80	17.93	L+	21	20			40								SEVENTEENTH St TO COUNTRY CLUB Rd
		Med	22	30			60								
		L+	27B	656		656									
		R+	27B	763		763									
		L+	27C	113				113							
		Med	29	208			832					20			
		Med	32	482			964		964			60			
17.93	18.01	Med	22	402			804					36			COUNTRY CLUB Rd TO OGDEN Rd
		L+	27B	356		356									
		R+	27B	440		440									
		L+	27C	66				66							
18.01	18.32	L+	21	20			40								OGDEN Rd TO LAKESHORE Blvd
		Med	22	1,568			3,136					132			
		L+	27B	1,534		1,534									
		R+	27B	1,625		1,625									
		L+	27C	84				84							
18.32	18.48	L+	21	20			40								LAKESHORE Blvd TO RANCHO VISTA Dr
		Med	22	782			1,564					66			
		L+	27B	756		756									
		R+	27B	846		846									
		L+	27C	85				85							
18.48	18.58	L+	21	20			40								RANCHO VISTA Dr TO BELL RAY Ave
		Med	22	470			940					22			
		L+	27B	468		468									
		R+	27B	520		520									
		L+	27C	55				55							
18.58	18.71	L+	21	20			40								BELL RAY Ave TO BENDER Dr
		Med	22	670			1,340					30			
		L+	27B	652		652									
		R+	27B	636		636									
		L+	27C	67				67							
18.71	18.88	L+	21	20			40								BENDER Dr TO OAK CREST Ave
		Med	22	916			1,832					78			
		L+	27B	888		888									
		R+	27B	774		774									
		L+	27C	82				82							
		R+	38	211	211								10		
			SUBTOTAL		211	12,538	13,442	720	2,514			525	10		

Dist	COUNTY	ROUTE	POST MILES TOTAL PROJECT	SHEET No.	TOTAL SHEETS
01	Lak	20	13.5/31.4	16	73

REGISTERED CIVIL ENGINEER 5-13-14 DATE

5-27-14
PLANS APPROVAL DATE

REGISTERED PROFESSIONAL ENGINEER BALJINDER S. BRAR No. C 67847 Exp 6-30-15 CIVIL STATE OF CALIFORNIA

THE STATE OF CALIFORNIA OR ITS OFFICERS OR AGENTS SHALL NOT BE RESPONSIBLE FOR THE ACCURACY OR COMPLETENESS OF SCANNED COPIES OF THIS PLAN SHEET.

REVISED BY | DATE REVISED

BALJINDER BRAR | JAMES P LEE

CALCULATED-DESIGNED BY | CHECKED BY

FUNCTIONAL SUPERVISOR: DEANN SPANGLER

STATE OF CALIFORNIA - DEPARTMENT OF TRANSPORTATION
Caltrans DIVISION OF ENGINEERING

PAVEMENT DELINEATION QUANTITIES

PDQ-4

LAST REVISION 3-21-14 | DATE PLOTTED => 10-JUN-2014 | TIME PLOTTED => 10:16

(N) - NOT A SEPARATE PAY ITEM, FOR INFORMATION ONLY

PAVEMENT DELINEATION

LOCATION (PM) FROM	LOCATION (PM) TO	SIDE L+/R+	DETAIL No.	(N) DETAIL LENGTH LF	8" THERMOPLASTIC TRAFFIC STRIPE WHITE SOLID LF	4" THERMOPLASTIC TRAFFIC STRIPE WHITE SOLID LF	4" THERMOPLASTIC TRAFFIC STRIPE YELLOW SOLID LF	4" THERMOPLASTIC TRAFFIC STRIPE (BROKEN 12-3) WHITE LF	4" THERMOPLASTIC TRAFFIC STRIPE (BROKEN 36-12) YELLOW LF	PAVEMENT MARKER (RETROREFLECTIVE) RECESSED TYPE D YELLOW (TWO WAY) EA	PAVEMENT MARKER (RETROREFLECTIVE) RECESSED TYPE H YELLOW (ONE WAY) EA	PAVEMENT MARKER (RETROREFLECTIVE) TYPE D YELLOW (TWO WAY) EA	PAVEMENT MARKER (RETROREFLECTIVE) TYPE G CLEAR (ONE WAY) EA	PAVEMENT MARKER (RETROREFLECTIVE) TYPE H YELLOW (ONE WAY) EA	REMARKS
18.88	19.04	L+	21	20			40								OAK CREST Ave TO LAUREL DELL Ave
		Med	22	240			480					22			
		L+	27B	681		681									
		R+	27B	774		774									
		L+	27C	133				133							
		Med	29	504			2,016					42			
		Med	38	192	192								9		
19.04	19.18	L+	21	20			40								LAUREL DELL Ave TO ROSEMONT Dr
		Med	22	376			752					32			
		L+	27B	665		665									
		R+	27B	744		744									
		L+	27C	97				97							
		Med	29	336			1,344					30			
19.18	21.09	L+	21	30			60								ROSEMONT Dr TO BRUNER Rd
		Med	22	5,280			10,560			442					
		Med	19	1,090			1,090		1,090	24	46				
		Med	6	112					112	2					
		Med	19	712			712		712	16	30				
		Med	22	2,805			5,610			236					
		L+	27B	9,466		9,466									
		R+	27B	10,030		10,030									
		L+	27C	165				165							
		L+	38	120	120								6		TURNOUT
21.09	21.31	L+	21	30			60								BRUNER Rd TO DIANE C+
		Med	22	1,109			2,218			94					
		L+	27B	918		918									
		R+	27B	1,154		1,154									
		L+	27C	177				177							
21.31	21.82	R+	21	30			60								DIANE C+ TO CORA Dr
		Med	22	2,636			5,272			222					
		L+	27B	2,618		2,618									
		R+	27B	2,573		2,573									
		L+	27C	158				158							
21.82	21.86	L+	21	20			40								CORA Dr TO VERNA WAY
		Med	22	168			336			16					
		L+	27B	103		103									
		R+	27B	195		195									
		L+	27C	162				162							
21.86	22.59	R+	21	26			52								VERNA WAY TO PARADISE VALLEY Dr
		Med	22	3,240			6,480			272					
		Med	29	336			1344			28					
		Med	22	168			336			14					
		L+	27B	3,297		3,297									
		R+	27B	3,156		3,156									
		R+	27C	149				149							
		L+	38	331	331								14		TURNOUT
		Med	38	338	338								14		WB L+ TURN
		R+	38	374	374								16		TURNOUT
22.59	23.83	L+	21	24			48								PARADISE VALLEY Dr TO GLADYS St
		Med	22	192			384			18					
		Med	29	360			1,440			30					
		Med	22	5,978			11,956			498					
		L+	27B	6,239		6,239									
		R+	27B	6,292		6,292									
		L+	27C	110				110							
		L+	38	200	200								14		TURNOUT
		R+	38	124	124								6		TURNOUT
				SUBTOTAL	1,679	48,905	52,730	1,151	1,914	1,912	76	126	79		

DIS+	COUNTY	ROUTE	POS+ MILES TOTAL PROJECT	SHEET No.	TOTAL SHEETS
01	Lak	20	13.5/31.4	17	73

REGIS+ERED CIVIL ENGINEER 5-13-14 DATE

5-27-14
PLANS APPROVAL DATE

REGISTERED PROFESSIONAL ENGINEER BALJINDER S. BRAR No. C 67847 Exp 6-30-15 CIVIL STATE OF CALIFORNIA

THE STATE OF CALIFORNIA OR ITS OFFICERS OR AGENTS SHALL NOT BE RESPONSIBLE FOR THE ACCURACY OR COMPLETENESS OF SCANNED COPIES OF THIS PLAN SHEET.

REVISED BY | DATE REVISED
BALJINDER BRAR | JAMES P LEE
CALCULATED-DESIGNED BY | CHECKED BY
FUNCTIONAL SUPERVISOR
DEANN SPANGLER

STATE OF CALIFORNIA - DEPARTMENT OF TRANSPORTATION
Caltrans DIVISION OF ENGINEERING

PAVEMENT DELINEATION QUANTITIES

PDQ-5

LAST REVISION 3-21-14 | DATE PLOTTED => 10-JUN-2014 | TIME PLOTTED => 10:16

(N) - NOT A SEPARATE PAY ITEM, FOR INFORMATION ONLY

PAVEMENT DELINEATION

LOCATION (PM) FROM	LOCATION (PM) TO	SIDE L+/R+	DETAIL No.	(N) DETAIL LENGTH LF	8" THERMOPLASTIC TRAFFIC STRIPE WHITE SOLID LF	4" THERMOPLASTIC TRAFFIC STRIPE WHITE SOLID LF	4" THERMOPLASTIC TRAFFIC STRIPE YELLOW SOLID LF	4" THERMOPLASTIC TRAFFIC STRIPE (BROKEN 12-3) WHITE LF	4" THERMOPLASTIC TRAFFIC STRIPE (BROKEN 36-12) YELLOW LF	PAVEMENT MARKER (RETROREFLECTIVE) RECESSED TYPE D YELLOW (TWO WAY) EA	PAVEMENT MARKER (RETROREFLECTIVE) RECESSED TYPE H YELLOW (ONE WAY) EA	PAVEMENT MARKER (RETROREFLECTIVE) TYPE D YELLOW (TWO WAY) EA	PAVEMENT MARKER (RETROREFLECTIVE) TYPE G CLEAR (ONE WAY) EA	PAVEMENT MARKER (RETROREFLECTIVE) TYPE H YELLOW (ONE WAY) EA	REMARKS
23.83	23.96	L+	21	17			34								GLADYS St TO MARY St
		Med	22	620			1,240			54					
		L+	27B	572		572									
		R+	27B	662		662									
		L+	27C	98				98							
23.96	24.20	L+	21	20			40								MARY St TO LINDEN Ln
		Med	22	1,244			2,488			106					
		L+	27B	1,175		1,175									
		R+	27B	1,272		1,272									
		L+	27C	55				55							
24.20	24.31	R+	21	18			36								LINDEN Ln TO HARBOR Dr
		Med	22	580			1,160			50					
		L+	27B	620		620									
		R+	27B	570		570									
		R+	27C	52				52							
24.31	24.43	L+	21	18			36								HARBOR Dr TO GLENHAVEN Dr
		Med	22	504			1,008			44					
		L+	27B	472		472									
		R+	27B	553		553									
		L+	27C	100				100							
24.43	24.83	L+	21	29			58								GLENHAVEN Dr TO HARVEY Blvd
		Med	22	2,070			4,140			174					
		L+	27B	2,012		2,012									
		R+	27B	2,119		2,119									
		L+	27C	100				100							
24.83	24.99	L+	21	24			48								HARVEY Blvd TO MITCHELL Rd
		Med	22	872			1,744			74					
		L+	27B	783		783									
		R+	27B	899		899									
		L+	27C	134				134							
24.99	25.44	L+	21	23			46								MITCHELL Rd TO HENDERSON Dr
		Med	22	2,280			4,560			192					
		L+	27B	2,185		2,185									
		R+	27B	2,330		2,330									
		L+	27C	118				118							
25.44	25.53	L+	21	17			34								HENDERSON Dr TO SPRING Rd
		Med	22	440			880			38					
		L+	27B	366		366									
		R+	27B	478		478									
		L+	27C	100				100							
25.53	25.63	L+	21	24			48								SPRING Rd TO SWANSON Rd
		Med	22	500			1,000			44					
		L+	27B	428		428									
		R+	27B	537		537									
		L+	27C	113				113							
25.63	25.78	L+	21	18			36								SWANSON Rd TO OLSON Rd
		Med	22	782			1,564			68					
		L+	27B	712		712									
		R+	27B	824		824									
		L+	27C	87				87							
25.78	26.15	L+	21	18			36								OLSON Rd TO PINGREE Rd
		Med	22	1,932			3,864			164					
		L+	27B	1,846		1,846									
		R+	27B	1,960		1,960									
		L+	27C	136				136							
SUBTOTAL						23,375	24,100	1,093		1,008					

Dist	COUNTY	ROUTE	POST MILES TOTAL PROJECT	SHEET No.	TOTAL SHEETS
01	Lak	20	13.5/31.4	18	73

REGISTERED CIVIL ENGINEER 5-13-14 DATE

5-27-14
PLANS APPROVAL DATE

REGISTERED PROFESSIONAL ENGINEER BALJINDER S. BRAR No. C 67847 Exp 6-30-15 CIVIL STATE OF CALIFORNIA

THE STATE OF CALIFORNIA OR ITS OFFICERS OR AGENTS SHALL NOT BE RESPONSIBLE FOR THE ACCURACY OR COMPLETENESS OF SCANNED COPIES OF THIS PLAN SHEET.

REVISED BY | DATE REVISED
BALJINDER BRAR | JAMES P LEE
CALCULATED-DESIGNED BY | CHECKED BY
FUNCTIONAL SUPERVISOR | DEANN SPANGLER

STATE OF CALIFORNIA - DEPARTMENT OF TRANSPORTATION
Caltrans® DIVISION OF ENGINEERING

PAVEMENT DELINEATION QUANTITIES

PDQ-6

LAST REVISION 3-21-14 | DATE PLOTTED => 10-JUN-2014 | TIME PLOTTED => 10:17

(N) - NOT A SEPARATE PAY ITEM, FOR INFORMATION ONLY

PAVEMENT DELINEATION

LOCATION (PM) FROM	LOCATION (PM) TO	SIDE L+/R+	DETAIL No.	(N) DETAIL LENGTH LF	8" THERMOPLASTIC TRAFFIC STRIPE WHITE SOLID LF	4" THERMOPLASTIC TRAFFIC STRIPE WHITE SOLID LF	4" THERMOPLASTIC TRAFFIC STRIPE YELLOW SOLID LF	4" THERMOPLASTIC TRAFFIC STRIPE (BROKEN 12-3) WHITE LF	4" THERMOPLASTIC TRAFFIC STRIPE (BROKEN 36-12) YELLOW LF	PAVEMENT MARKER (RETROREFLECTIVE) RECESSED TYPE D YELLOW (TWO WAY) EA	PAVEMENT MARKER (RETROREFLECTIVE) RECESSED TYPE H YELLOW (ONE WAY) EA	PAVEMENT MARKER (RETROREFLECTIVE) TYPE D YELLOW (TWO WAY) EA	PAVEMENT MARKER (RETROREFLECTIVE) TYPE G CLEAR (ONE WAY) EA	PAVEMENT MARKER (RETROREFLECTIVE) TYPE H YELLOW (ONE WAY) EA	REMARKS
26.15	26.45	R+	21	18			36								PINGREE Rd TO LAKEVIEW Dr
		Med	22	1,552			3,104			132					
		L+	27B	1,430		1,430									
		R+	27B	1,598		1,598									
		L+	27C	188				188							
26.45	27.06	Med	22	3,100			6,200			260					LAKEVIEW Dr TO HILLSIDE Ln
		L+	27B	2,974		2,974									
		R+	27B	3,146		3,146									
		L+	27C	75				75							
27.06	27.62	R+	21	16			32								HILLSIDE Ln TO ISLAND Dr
		Med	22	3,015			6,030					254			
		L+	27B	3,024		3,024									
		R+	27B	2,944		2,944									
		R+	27C	188				188							
27.62	27.70	L+	21	14			28								ISLAND Dr TO SHADY Ln
		Med	22	216								20			
		Med	29	120								12			
		L+	27B	323		323									
		R+	27B	314		314									
		L+	27C	68				68							
27.70	27.80	R+	21	12			24								SHADY LH TO SHORT St
		L+	27B	460		460									
		R+	27B	474		474									
		L+	27C	78				78							
		R+	27C	118				118							
		Med	32	474			948		948			53			
27.80	27.84	L+	27B	118		118									SHORT St TO PINE St
		R+	27B	208		208									
		L+	27C	74				74							
		Med	32	152			304		304			18			
27.84	27.89	L+	21	12			24								PINE St TO ACORN St
		L+	27B	234		234									
		R+	27B	232		232									
		Med	32	232			464		464			28			
27.89	28.02	L+	21	48			96								ACORN St TO OAK GROVE Ave
		L+	27B	600		600									
		R+	27B	700		700									
		L+	27C	341				341							ACORN ST, FOOTHILL Blvd, OAK GROVE Ave
		Med	32	623			1,246		1,246			68			
28.02	28.21	L+	21	24			48								OAK GROVE Ave TO LAKE St
		L+	21	24			48								
		L+	27B	941		941									
		R+	27B	963		963									
		L+	27C	136				136							
		R+	27C	132				132							
		Med	32	988			1,976		1,976			105			
28.21	28.33	R+	21	24			48								LAKE St TO SHAUL St
		L+	27B	638		638									
		R+	27B	543		543									
		R+	27C	55				55							
		Med	32	614			1,228		1,228			65			
28.33	28.42	L+	21	20			40								SHAUL St TO HIGH VALLEY Rd
		L+	27B	372		372									
		R+	27B	430		430									
		L+	27C	77				77							
		Med	32	384			768		768			43			
SUBTOTAL						22,666	22,692	1,530	6,934	392		666			

Dist	COUNTY	ROUTE	POST MILES TOTAL PROJECT	SHEET No.	TOTAL SHEETS
01	Lak	20	13.5/31.4	19	73

REGISTERED CIVIL ENGINEER 5-13-14 DATE

5-27-14
PLANS APPROVAL DATE

REGISTERED PROFESSIONAL ENGINEER BALJINDER S. BRAR No. C 67847 Exp. 6-30-15 CIVIL STATE OF CALIFORNIA

THE STATE OF CALIFORNIA OR ITS OFFICERS OR AGENTS SHALL NOT BE RESPONSIBLE FOR THE ACCURACY OR COMPLETENESS OF SCANNED COPIES OF THIS PLAN SHEET.

REVISED BY | DATE REVISED

BALJINDER BRAR | JAMES P LEE

CALCULATED-DESIGNED BY | CHECKED BY

FUNCTIONAL SUPERVISOR: DEANN SPANGLER

STATE OF CALIFORNIA - DEPARTMENT OF TRANSPORTATION
Caltrans DIVISION OF ENGINEERING

PAVEMENT DELINEATION QUANTITIES

PDQ-7

LAST REVISION 3-21-14 | DATE PLOTTED => 10-JUN-2014 | TIME PLOTTED => 10:17

(N) - NOT A SEPARATE PAY ITEM, FOR INFORMATION ONLY

PAVEMENT DELINEATION

LOCATION (PM) FROM	LOCATION (PM) TO	SIDE L+/R+	DETAIL No.	(N) DETAIL LENGTH LF	8" THERMOPLASTIC TRAFFIC STRIPE WHITE SOLID LF	4" THERMOPLASTIC TRAFFIC STRIPE WHITE SOLID LF	4" THERMOPLASTIC TRAFFIC STRIPE YELLOW SOLID LF	4" THERMOPLASTIC TRAFFIC STRIPE (BROKEN 12-3) WHITE LF	4" THERMOPLASTIC TRAFFIC STRIPE (BROKEN 36-12) YELLOW LF	PAVEMENT MARKER (RETROREFLECTIVE) RECESSED TYPE D YELLOW (TWO WAY) EA	PAVEMENT MARKER (RETROREFLECTIVE) RECESSED TYPE H YELLOW (ONE WAY) EA	PAVEMENT MARKER (RETROREFLECTIVE) TYPE D YELLOW (TWO WAY) EA	PAVEMENT MARKER (RETROREFLECTIVE) TYPE G CLEAR (ONE WAY) EA	PAVEMENT MARKER (RETROREFLECTIVE) TYPE H YELLOW (ONE WAY) EA	REMARKS
28.42	28.49	R+	21	18			36								HIGH VALLEY Rd TO SCHINDLER St
		L+	27B	365		365									
		R+	27B	310		310									
		R+	27C	102				102							
		Med	32	312			624		624			35			
28.49	28.54	L+	21	10			20								SCHINDLER St TO BUTLER St
		L+	27B	286		286									
		R+	27B	184		184									
		L+	27C	74				74							
		Med	32	248			496		496			38			
		R+	21	20			40								
28.54	28.70	L+	27B	848		848									BUTLER St TO HOOVER St
		R+	27B	763		763									
		R+	27C	38				38							
		Med	32	815			1,630		1,630			90			
28.70	28.84	R+	21	22			44								HOOVER St TO KEYS Blvd
		L+	27B	648		648									
		R+	27B	646		646									
		L+	27C	92				92							
		L+	27C	142				142							
		Med	32	665			1,330		1,330			73			
28.84	29.35	R+	21	25			50								KEYS Blvd TO ORCHARD SHORES Dr
		L+	27B	2,622		2,622									
		R+	27B	2,496		2,496									
		R+	27C	145				145							
		Med	32	242			484		484			28			
		Med	29	408			1,632					34			
		Med	22	252			504					22			
		Med	6	1,040					1,040			22			
		Med	22	168			336					14			
		Med	29	432			1,728					18			
29.35	29.54	R+	21	36			72								ORCHARD SHORES Dr TO SULPHUR BANK Dr
		Med	32	934			1,868		1,868			100			
		L+	27B	994		994									
		R+	27B	821		821									
		R+	27C	190				190							
29.54	29.85	L+	21	42			84								SULFUR BANK Dr TO MORINE RANCH Rd
		Med	22	130			260					12			
		L+	27B	1,424		1,424									
		R+	27B	1,534		1,534									
		L+	27C	218				218							
		Med	29	504			2,016					42			
		Med	22	905			1,810					76			
		Med	38	116	116								6		
29.85	31.32	R+	21	64			128								MORINE RANCH Rd TO DEL WAY
		Med	22	312			624					28			
		Med	19	1,308			1,308		1,308			54		27	
		Med	22	6,192			12,384					516			
		L+	27B	7,566		7,566									
		R+	27B	7,496		7,496									
		R+	27C	139				139							
		R+	38	172	172								8		
		L+	38	192	192								9		
SUBTOTAL					480	29,003	29,508	1,140	8,780			1,202	23	27	

Dist	COUNTY	ROUTE	POST MILES TOTAL PROJECT	SHEET No.	TOTAL SHEETS
01	Lak	20	13.5/31.4	20	73

REGISTERED CIVIL ENGINEER 5-13-14 DATE

5-27-14
PLANS APPROVAL DATE

REGISTERED PROFESSIONAL ENGINEER BALJINDER S. BRAR No. C 67847 Exp 6-30-15 CIVIL STATE OF CALIFORNIA

THE STATE OF CALIFORNIA OR ITS OFFICERS OR AGENTS SHALL NOT BE RESPONSIBLE FOR THE ACCURACY OR COMPLETENESS OF SCANNED COPIES OF THIS PLAN SHEET.

REVISED BY | DATE REVISED
BALJINDER BRAR | JAMES P LEE
CALCULATED-DESIGNED BY | CHECKED BY
FUNCTIONAL SUPERVISOR | DEANN SPANGLER

STATE OF CALIFORNIA - DEPARTMENT OF TRANSPORTATION
Caltrans DIVISION OF ENGINEERING

PAVEMENT DELINEATION QUANTITIES

PDQ-8

LAST REVISION 3-21-14 | DATE PLOTTED => 10-JUN-2014 | TIME PLOTTED => 10:17

Dist	COUNTY	ROUTE	POST MILES TOTAL PROJECT	SHEET No.	TOTAL SHEETS
01	Lak	20	13.5/31.4	21	73

REGISTERED CIVIL ENGINEER 5-13-14 DATE

5-27-14
PLANS APPROVAL DATE

REGISTERED PROFESSIONAL ENGINEER BALJINDER S. BRAR No. C 67847 Exp 6-30-15 CIVIL STATE OF CALIFORNIA

THE STATE OF CALIFORNIA OR ITS OFFICERS OR AGENTS SHALL NOT BE RESPONSIBLE FOR THE ACCURACY OR COMPLETENESS OF SCANNED COPIES OF THIS PLAN SHEET.

NOTES:

1. FOR LOCATION, SIDE AND DETAIL No. OF TEMPORARY TRAFFIC STRIPE (PAINT) SEE PAVEMENT DELINEATION QUANTITIES SHEETS PDQ-1 TO PDQ-9
2. TEMPORARY TRAFFIC STRIPE (PAINT) QUANTITIES ARE FOR 2 SEPARATE APPLICATIONS (AS AND WHEN REQUIRED)

(N) - NOT A SEPARATE PAY ITEM, FOR INFORMATION ONLY

PAVEMENT DELINEATION

LOCATION (PM)		SIDE	DETAIL No.	(N) DETAIL LENGTH	8" THERMOPLASTIC TRAFFIC STRIPE	4" THERMOPLASTIC TRAFFIC STRIPE				PAVEMENT MARKER (RETROREFLECTIVE)					REMARKS
										RECESSED					
					WHITE SOLID	WHITE SOLID	YELLOW SOLID	(BROKEN 12-3) WHITE	(BROKEN 36-12) YELLOW	TYPE D YELLOW (TWO WAY)	TYPE H YELLOW (ONE WAY)	TYPE D YELLOW (TWO WAY)	TYPE G CLEAR (ONE WAY)	TYPE H YELLOW (ONE WAY)	
FROM	TO	L†/R†		LF	LF	LF	LF	LF	LF	EA	EA	EA	EA	EA	
31.32	31.40	L†	21	20			40								DEL WAY TO END
		Med	22	402			804					34			
		L†	27B	400		400									
		R†	27B	394		394									
		R†	36	282	564								26		
SUBTOTAL					564	794	844					34	26		
SUBTOTAL PDQ-1						9,856	10,884	1,088	8,886			534			
SUBTOTAL PDQ-2						24,947	20,222	1,077	4,770			880		67	
SUBTOTAL PDQ-3						5,746	5,950	718	5,452			316			
SUBTOTAL PDQ-4					211	12,538	13,442	720	2,514			525	10		
SUBTOTAL PDQ-5					1,679	48,905	52,730	1,151	1,914	1,912	76	126	79		
SUBTOTAL PDQ-6						23,375	24,100	1,093		1,008					
SUBTOTAL PDQ-7						22,666	22,692	1,530	6,934	392		666			
SUBTOTAL PDQ-8					480	29,003	29,508	1,140	8,780			1,202	23	27	
SUBTOTAL					2,934	177,830	180,372	8,517	39,250	3,312	76	4,283	138	94	
TOTAL					2,934	358,202		8,517	39,250	3,388		4,515			

REMOVE PAVEMENT MARKER

REMOVE PAVEMENT MARKER	RECESSED MARKER	MARKER
	EA	EA
SUBTOTAL	4,472	5,960
TOTAL	10,432	

DELINEATOR (CLASS 1)

LOCATION (PM)		SIDE	DELINEATOR (CLASS 1)
FROM	TO	L†/RT	EA
26.06	26.14	L†	9
26.31	26.38	R†	6
ON TANGENT		L†/R†	285
ON CURVE		L†/R†	150
TOTAL			450

TEMPORARY TRAFFIC STRIPE (PAINT)

TEMPORARY TRAFFIC STRIPE (PAINT)	8" WHITE SOLID	4" WHITE SOLID	4" YELLOW SOLID	4" WHITE BROKEN (12-3)	4" BROKEN YELLOW (36-12)
	LF	LF	LF	LF	LF
SUBTOTAL	5,868	355,660	185,044	17,034	78,500
TOTAL	642,106				

STATE OF CALIFORNIA - DEPARTMENT OF TRANSPORTATION
Caltrans® DIVISION OF ENGINEERING

FUNCTIONAL SUPERVISOR: DEANN SPANGLER
CALCULATED-DESIGNED BY: BALJINDER BRAR
CHECKED BY: JAMES P LEE
REVISED BY
DATE REVISED

PAVEMENT DELINEATION QUANTITIES
PDQ-9

LAST REVISION 3-21-14
DATE PLOTTED => 10-JUN-2014
TIME PLOTTED => 10:17

Dist	COUNTY	ROUTE	POST MILES TOTAL PROJECT	SHEET No.	TOTAL SHEETS
01	Lak	20	13.5/31.4	22	73

REGISTERED CIVIL ENGINEER 5-13-14 DATE

5-27-14
PLANS APPROVAL DATE

REGISTERED PROFESSIONAL ENGINEER BALJINDER S. BRAR No. C 67847 Exp 6-30-15 CIVIL STATE OF CALIFORNIA

THE STATE OF CALIFORNIA OR ITS OFFICERS OR AGENTS SHALL NOT BE RESPONSIBLE FOR THE ACCURACY OR COMPLETENESS OF SCANNED COPIES OF THIS PLAN SHEET.

THERMOPLASTIC PAVEMENT MARKING

LOCATION (PM)	Lt/Rt Med	ORIEN-TATION	TYPE/LEGEND	AREA SQFT	REMARKS
13.56	Med	EB/WB	TYPE III ARROW (Lt)	84	2 EA OPPOSING
13.58	Rdwy		CROSS WALK	314	SAYRE Ave WEST SIDE
13.58	Lt	FSBT	STOP	22	FSBT SAYRE Ave
13.58	Lt		LIMIT LINE	15	FSBT SAYRE Ave
13.58	Rt	FNBT	STOP	22	FNBT SAYRE Ave
13.58	Rt		LIMIT LINE	12	FNBT SAYRE Ave
13.61	Rt	FEBT	Ped	18	
13.61	Med	EB/WB	TYPE III ARROW (Lt)	84	2 EA OPPOSING
13.62	Rt	FSBT	Xing	21	
13.65	Lt	FSBT	STOP	22	LEVY Ave
13.65	Lt		LIMIT LINE	16	LEVY Ave
13.70	Lt	FSBT	STOP	22	KEELING Ave
13.70	Lt		LIMIT LINE	31	KEELING Ave
13.71	Rdwy		CROSS WALK	300	KEELING Ave EAST SIDE
13.72	Med	EB/WB	TYPE III ARROW (Lt)	84	2 EA OPPOSING
13.76	Lt	FSBT	STOP	22	CRUMP Ave
13.76	Lt		LIMIT LINE	20	CRUMP Ave
13.77	Lt	FWBT	Xing	21	
13.78	Lt	FWBT	Ped	18	
13.78	Lt		LIMIT LINE	12	MANZANITA Rd
13.78	Lt	FWBT	STOP	22	MANZANITA Rd
13.81	Med	EB/WB	TYPE III ARROW (Lt)	84	2 EA OPPOSING
13.83	Rdwy		CROSSWALK	363	HOWARD St
13.84	Lt	FSBT	STOP	22	HOWARD St
13.84	Lt		LIMIT LINE	20	HOWARD St
13.84	Rt	FEBT	STOP	22	HOWARD St
13.84	Rt		LIMIT LINE	18	HOWARD St
13.90	Rt	FEBT	Ped	18	
13.91	Med	EB/WB	TYPE III ARROW (Lt)	84	2 EA OPPOSING
13.91	Rt	FEBT	Xing	21	
13.97	Rt	FNBT	STOP	22	BENTON St
13.97	Rt	FNBT	LIMIT LINE	22	BENTON St
14.00	Med	EB/WB	TYPE III ARROW (Lt)	84	2 EA OPPOSING
14.01	Rdwy	FNBT	CROSS WALK	363	HUDSON Ave WEST SIDE
14.02	Rt	FNBT	STOP	22	HUDSON Ave
14.02	Rt		LIMIT LINE	18	HUDSON Ave
14.02	Lt	FSBT	STOP	22	HUDSON Ave
14.02	Lt		LIMIT LINE	16	HUDSON Ave
14.07	Med	EB/WB	TYPE III ARROW (Lt)	84	2 EA OPPOSING
14.08	Lt	FWBT	Xing	21	
14.09	Lt	FWBT	Ped	18	
14.18	Med	EB/WB	TYPE III ARROW (Lt)	84	2 EA OPPOSING
14.26	Lt	FSBT	STOP	44	DAWS Ave (2 EA)
14.26	Lt		LIMIT LINE	55	DAWS Ave
14.30	Med	EB/WB	TYPE III ARROW (Lt)	84	2 EA OPPOSING
14.38	Lt	FSBT	STOP	22	BURPEE Dr
14.38	Lt		LIMIT LINE	57	BURPEE Dr
14.41	Med	EB/WB	TYPE III ARROW (Lt)	84	2 EA OPPOSING
15.29	Lt	FSBT	STOP	22	BARTLETT SPRINGS Rd
15.29	Lt		LIMIT LINE	26	BARTLETT SPRINGS Rd
16.57	Lt	FSBT	STOP	22	FOOTHILL Dr
16.57	Lt		LIMIT LINE	42	FOOTHILL Dr
16.64	Lt	FSBT	STOP	22	GROVE St
16.64	Lt		LIMIT LINE	40	GROVE St
16.84	Rt	FNBT	STOP	22	LAKE St
16.84	Rt		LIMIT LINE	18	LAKE St
16.88	Med	FEBT	TYPE III ARROW (Lt)	42	Lt TURN TO FIRST St
16.89	Lt	FSBT	STOP	22	FIRST St
16.89	Lt		LIMIT LINE	20	FIRST St
16.89	Rt		ISA MARKING	23	FIRST St
16.89	Rdwy		CROSS WALK	348	FIRST St EAST SIDE
16.93	Med	FEBT	TYPE III ARROW (Lt)	42	Lt TURN TO SECOND St
16.94	Lt	FSBT	STOP	22	SECOND St
16.94	Lt		LIMIT LINE	20	SECOND St
16.94	Rdwy		CROSS WALK	348	SECOND St EAST SIDE
SUBTOTAL-1				4,057	

LOCATION (PM)	Lt/Rt Med	ORIEN-TATION	TYPE/LEGEND	AREA SQFT	REMARKS
16.96	Med	EB/WB	TYPE III ARROW (Lt)	84	2 EA OPPOSING
16.99	Med	FEBT	TYPE III ARROW (Lt)	42	Lt TURN TO THIRD St
17.00	Rdwy		CROSS WALK	299	THIRD St WEST SIDE
17.00	Lt	FSBT	STOP	22	THIRD St
17.00	Lt		LIMIT LINE	25	THIRD St
17.02	Med	EB/WB	TYPE III ARROW (Lt)	84	2 EA OPPOSING
17.05	Med	FEBT	TYPE III ARROW (Lt)	42	Lt TURN TO FOURTH St
17.05	Rdwy		CROSS WALK	299	FOURTH St WEST SIDE
17.05	Lt		CROSS WALK	260	ACROSS FOURTH St
17.05	Lt	FSBT	STOP	22	FOURTH St
17.05	Lt		LIMIT LINE	16	FOURTH St
17.04	Med	EB/WB	TYPE III ARROW (Lt)	84	2 EA OPPOSING
17.11	Med	FEBT	TYPE III ARROW (Lt)	42	Lt TURN TO FIFTH St
17.12	Rdwy		CROSS WALK	299	FIFTH St WEST SIDE
17.12	Lt		CROSS WALK	260	ACROSS FIFTH St
17.12	Lt	FSBT	STOP	22	FIFTH St
17.12	Lt		LIMIT LINE	16	FIFTH St
17.12	Rdwy		CROSS WALK	299	FIFTH St EAST SIDE
17.14	Med	EB/WB	TYPE III ARROW (Lt)	84	2 EA OPPOSING
17.16	Rt	FEBT	Ped	18	
17.17	Med	FEBT	TYPE III ARROW (Lt)	42	Lt TURN TO SIXTH St
17.17	Rt	FEBT	Xing	21	
17.17	Rt	FEBT	KEEP CLEAR	51	ON SHOULDER
17.18	Lt	FSBT	STOP	22	SIXTH St
17.18	Lt		LIMIT LINE	24	SIXTH St
17.21	Med	EB/WB	TYPE III ARROW (Lt)	84	2 EA OPPOSING
17.24	Med	FEBT	TYPE III ARROW (Lt)	42	Lt TURN TO SEVENTH St
17.24	Lt	FSBT	STOP	22	SEVENTH St
17.24	Lt		LIMIT LINE	26	SEVENTH St
17.26	Med	EB/WB	TYPE III ARROW (Lt)	84	2 EA OPPOSING
17.28	Rt	FWBT	TYPE I 10'-0"ARROW	42	ENTER PARKING
17.28	Med	FEBT	TYPE III ARROW (Lt)	42	Lt TURN TO EIGHTH St
17.29	Lt	FSBT	STOP	22	EIGHTH St
17.29	Lt		LIMIT LINE	14	EIGHTH St
17.31	Med	FWBT	TYPE III ARROW (Lt)	42	Lt TURN TO NINTH St
17.32	Rdwy		CROSS WALK	325	NINTH St WEST SIDE
17.32	Lt	FSBT	STOP	22	NINTH St
17.32	Lt		LIMIT LINE	14	NINTH St
17.32	Rdwy		CROSS WALK	363	NINTH St EAST SIDE
17.32	Rt	FWBT	TYPE I 10'-0"ARROW	14	ENTER PARKING
17.32	Rt	FWBT	TYPE I 10'-0"ARROW	14	EXIT PARKING
17.34	Med	EB/WB	TYPE III ARROW (Lt)	84	2 EA OPPOSING
17.37	Med	FEBT	TYPE III ARROW (Lt)	42	Lt TURN TO TENTH St
17.38	Rdwy		CROSS WALK	325	TENTH St WEST SIDE
17.38	Lt	FSBT	STOP	22	TENTH St
17.38	Lt		LIMIT LINE	24	TENTH St
17.40	Med	EB/WB	TYPE III ARROW (Lt)	84	2 EA OPPOSING
17.43	Med	FEBT	TYPE III ARROW (Lt)	42	Lt TURN TO ELEVENTH St
17.44	Lt	FSBT	STOP	22	ELEVENTH St
17.44	Lt		LIMIT LINE	24	ELEVENTH St
17.46	Med	EB/WB	TYPE III ARROW (Lt)	84	2 EA OPPOSING
17.49	Med	FEBT	TYPE III ARROW (Lt)	42	Lt TURN TO ELEVENTH St
17.50	Lt	FSBT	STOP	22	TWELFTH St
17.50	Lt		LIMIT LINE	24	TWELFTH St
17.52	Med	EB/WB	TYPE III ARROW (Lt)	84	2 EA OPPOSING
17.55	Med	FEBT	TYPE III ARROW (Lt)	42	Lt TURN TO THIRTEENTH St
17.56	Rdwy		CROSS WALK	325	THIRTEENTH St
17.56	Lt	FSBT	STOP	22	THIRTEENTH St
17.56	Lt		LIMIT LINE	43	THIRTEENTH St
17.58	Med	EB/WB	TYPE III ARROW (Lt)	84	2 EA OPPOSING
17.61	Med	FEBT	TYPE III ARROW (Lt)	42	Lt TURN TO FOURTEENTH St
17.62	Lt	FSBT	STOP	22	FOURTEENTH St
17.62	Lt		LIMIT LINE	22	FOURTEENTH St
17.64	Med	EB/WB	TYPE III ARROW (Lt)	84	2 EA OPPOSING
SUBTOTAL-2				5,262	

PAVEMENT DELINEATION QUANTITIES
PDQ-10

STATE OF CALIFORNIA - DEPARTMENT OF TRANSPORTATION
Caltrans® DIVISION OF ENGINEERING

FUNCTIONAL SUPERVISOR: DEANN SPANGLER

CALCULATED-DESIGNED BY: BALJINDER BRAR
CHECKED BY: JAMES P LEE

REVISED BY / DATE REVISED

LAST REVISION 3-21-14
DATE PLOTTED => 10-JUN-2014
TIME PLOTTED => 10:17

Dist	COUNTY	ROUTE	POST MILES TOTAL PROJECT	SHEET No.	TOTAL SHEETS
01	Lak	20	13.5/31.4	23	73

REGISTERED CIVIL ENGINEER 5-13-14 DATE

5-27-14
PLANS APPROVAL DATE

REGISTERED PROFESSIONAL ENGINEER BALJINDER S. BRAR No. C 67847 Exp 6-30-15 CIVIL STATE OF CALIFORNIA

THE STATE OF CALIFORNIA OR ITS OFFICERS OR AGENTS SHALL NOT BE RESPONSIBLE FOR THE ACCURACY OR COMPLETENESS OF SCANNED COPIES OF THIS PLAN SHEET.

THERMOPLASTIC PAVEMENT MARKING

LOCATION (PM)	Lt/Rt Med	ORIEN-TATION	TYPE/LEGEND	AREA SQFT	REMARKS
17.67	Med	FEBT	TYPE III ARROW (Lt)	42	Lt TURN TO FIFTEENTH St
17.68	Lt	FSBT	STOP	22	FIFTEENTH St
17.68	Lt		LIMIT LINE	22	FIFTEENTH St
17.70	Med	EB/WB	TYPE III ARROW (Lt)	84	2 EA OPPOSING
17.73	Med	FEBT	TYPE III ARROW (Lt)	42	Lt TURN TO SIXTEENTH St
17.74	Rdwy		CROSS WALK	325	SIXTEENTH St WEST SIDE
17.74	Lt	FSBT	STOP	22	SIXTEENTH St
17.74	Lt		LIMIT LINE	22	SIXTEENTH St
17.76	Med	EB/WB	TYPE III ARROW (Lt)	84	2 EA OPPOSING
17.78	Lt	FWBT	Xing	21	
17.79	Med	FEBT	TYPE III ARROW (Lt)	42	Lt TURN TO SEVENTEENTH St
17.79	Lt	FWBT	Ped	18	SEVENTEENTH St
17.80	Lt	FSBT	STOP	22	SEVENTEENTH St
17.80	Lt		LIMIT LINE	22	SEVENTEENTH St
17.83	Med	EB/WB	TYPE III ARROW (Lt)	84	2 EA OPPOSING
17.93	Lt	FSBT	STOP	22	COUNTRY CLUB Dr
17.93	Lt		LIMIT LINE	32	COUNTRY CLUB Dr
18.01	Lt	FSBT	STOP	22	OGDEN Rd
18.01	Lt		LIMIT LINE	12	OGDEN Rd
18.32	Lt	FSBT	STOP	22	LAKESHORE Blvd
18.32	Lt			24	LAKESHORE Blvd
18.48	Lt	FSBT	STOP	22	RANCHO VISTA Dr
18.48	Lt		LIMIT LINE	24	RANCHO VISTA Dr
18.58	Lt	FSBT	STOP	22	BELL RAY Ave
18.58	Lt		LIMIT LINE	18	BELL RAY Ave
18.71	Lt	FSBT	STOP	22	BENDER Dr
18.71	Lt		LIMIT LINE	28	BENDER Dr
18.88	Lt	FSBT	STOP	22	OAK CREST Ave
18.88	Lt		LIMIT LINE	24	OAK CREST Ave
19.03	Rt	FEBT	TYPE III ARROW (Lt)	42	Lt TURN POCKET
19.03	Rt	FEBT	TYPE V ARROW	33	THRU LANE
19.04	Lt	FSBT	STOP	44	LAUREL DELL Dr (2 EA)
19.04	Lt		LIMIT LINE	32	LAUREL DELL Dr
19.18	Lt	FSBT	STOP	22	ROSEMONT Dr
19.18	Lt		LIMIT LINE	18	ROSEMONT Dr
21.09	Lt	FSBT	STOP	22	BRUNER Rd
21.09	Lt		LIMIT LINE	42	BRUNER Rd
21.31	Lt	FSBT	STOP	22	DIANE Ct
21.31	Lt		LIMIT LINE	40	DIANE Ct
21.82	Rt	FNBT	STOP	22	CORA Dr
21.82	Rt		LIMIT LINE	35	CORA Dr
21.86	Lt	FSBT	STOP	22	VERNA WAY
21.86	Lt		LIMIT LINE	31	VERNA WAY
22.59	Rt	FNBT	STOP (2 EA)	44	PARADISE COVE SUB DIVISION
22.59	Rt		LIMIT LINE	47	PARADISE COVE SUB DIVISION
23.18	Rt	FEBT	STOP	22	UNNAMED St
23.18	Rt		LIMIT LINE	24	UNNAMED St
23.83	Lt	FSBT	STOP	22	GLADYS St
23.83	Lt		LIMIT LINE	24	GLADYS St
23.96	Lt	FSBT	STOP	22	MARY St
23.96	Lt		LIMIT LINE	22	MARY St
24.20	Lt	FSBT	STOP	22	LINDEN St
24.20	Lt		LIMIT LINE	18	LINDEN St
24.31	Rt	FNBT	STOP	22	HARBOR Dr
24.31	Rt		LIMIT LINE	12	HARBOR Dr
24.43	Lt	FSBT	STOP	22	GLENHAVEN Dr
24.43	Lt		LIMIT LINE	24	GLENHAVEN Dr
24.83	Lt	FSBT	STOP	22	HARVEY BLVD
24.83	Lt		LIMIT LINE	24	HARVEY BLVD
24.99	Lt	FSBT	STOP	22	MITCHELL Rd
24.99	Lt		LIMIT LINE	30	MITCHELL Rd
25.44	Lt	FSBT	STOP	22	HENDERSON Dr
25.44	Lt		LIMIT LINE	25	HENDERSON Dr
SUBTOTAL-3				2,109	

LOCATION (PM)	Lt/Rt Med	ORIEN-TATION	TYPE/LEGEND	AREA SQFT	REMARKS
25.53	Lt	FSBT	STOP	22	SPRING Rd
25.53	Lt		LIMIT LINE	12	SPRING Rd
25.63	Lt	FSBT	STOP	22	SWANSON Rd
25.63	Lt		LIMIT LINE	26	SWANSON Rd
25.78	Lt	FSBT	STOP	22	OLSON Rd
25.78	Lt		LIMIT LINE	26	OLSON Rd
26.15	Lt	FSBT	STOP	22	PINGREE Rd
26.15	Lt		LIMIT LINE	20	PINGREE Rd
26.45	Lt	FSBT	STOP	22	LAKEVIEW Dr
26.45	Lt		LIMIT LINE	26	LAKEVIEW Dr
27.06	Lt	FSBT	STOP	22	HILLSIDE Ln
27.06	Lt		LIMIT LINE	16	HILLSIDE Ln
27.08	Rt	FNBT	STOP	22	NEW
27.08	Rt		LIMIT LINE	24	NEW
27.62	Rt	FNBT	STOP	22	ISLAND Dr
27.62	Rt		LIMIT LINE	42	ISLAND Dr
27.67	Rt	FEBT	Ped	18	
27.68		FEBT	Xing	21	
27.70	Lt	FNBT	STOP	22	SHADY LN
27.70	Lt		LIMIT LINE	18	SHADY LN
27.77	Lt	FNBT	STOP	22	FOOTHILL Blvd
27.77	Lt		LIMIT LINE	14	FOOTHILL Blvd
27.80	Rt	FWBT	STOP	22	SHORT St
27.80	Rt		LIMIT LINE	26	SHORT St
27.84	Lt		CROSS WALK	363	ACROSS PINE St
27.84	Rdwy		CROSS WALK	18	PINE St EAST SIDE
27.85	Med	EB/WB	TYPE III ARROW (Lt)	84	2 EA OPPOSING
27.87	Rt	FWBT	STOP	22	SHORT St
27.87	Rt		LIMIT LINE	26	SHORT St
27.89	Rdwy		CROSS WALK	453	END OF PARK
27.90	Med	EB/WB	TYPE III ARROW (Lt)	84	2 EA OPPOSING
27.97	Rdwy		CROSS WALK	294	FOOTHILL BLVD WEST SIDE
27.98	Lt	FSBT	STOP	22	FOOTHILL BLVD
27.98	Lt		LIMIT LINE	18	FOOTHILL BLVD
27.98	Med	FEBT	TYPE III ARROW (Lt)	84	2 EA OPPOSING
28.06	Med	FEBT	TYPE III ARROW (Lt)	84	2 EA OPPOSING
28.14	Med	FEBT	TYPE III ARROW (Lt)	84	2 EA OPPOSING
28.20	Med	FEBT	TYPE III ARROW (Lt)	84	2 EA OPPOSING
28.21	Lt	FSBT	STOP	22	OAK GROVE Ave
28.21	Lt		LIMIT LINE	24	OAK GROVE Ave
28.21	Rt	FSBT	STOP	22	LAKE St
28.21	Rt		LIMIT LINE	30	LAKE St
28.27	Med	EB/WB	TYPE III ARROW (Lt)	84	2 EA OPPOSING
28.32	Rt	FEBT	SLOW YELLOW	23	
28.32	Med	EB/WB	TYPE III ARROW (Lt)	84	2 EA OPPOSING
28.32	Rt	FEBT	SCHOOL YELLOW	35	
28.33	Rt	FNBT	STOP	22	SHAULT St
28.33	Rt		LIMIT LINE	22	SHAULT St
28.33	Rt	FEBT	Xing YELLOW	21	
28.39	Med	EB/WB	TYPE III ARROW (Lt)	84	2 EA OPPOSING
28.42	Lt	FSBT	STOP	22	HIGH VALLEY Rd
28.42	Lt		CROSS WALK YELLOW	325	HIGH VALLEY Rd
28.42	Rdwy		CROSS WALK YELLOW	330	HIGH VALLEY Rd EAST SIDE
28.48	Med	EB/WB	TYPE III ARROW (Lt)	84	2 EA OPPOSING
28.49	Lt	FWBT	Xing YELLOW	21	
28.49	Rt	FNBT	STOP	22	SCHINDLER St
28.49	Rt		LIMIT LINE	27	SCHINDLER St
28.50	Lt	FWBT	SCHOOL YELLOW	35	
28.51	Lt	FWBT	SLOW YELLOW	23	
28.54	Rdwy		CROSSWALK	362	BUTTLER St
28.54	Rt	FNBT	STOP	22	BUTTLER St
28.54	Rt		LIMIT LINE	16	BUTTLER St
28.55	Med	EB/WB	TYPE III ARROW (Lt)	84	2 EA OPPOSING
28.60	Rt	FEBT	Ped	18	
SUBTOTAL-4				4,115	

PAVEMENT DELINEATION QUANTITIES

PDQ-11

STATE OF CALIFORNIA - DEPARTMENT OF TRANSPORTATION
Caltrans® DIVISION OF ENGINEERING

FUNCTIONAL SUPERVISOR: DEANN SPANGLER
CALCULATED-DESIGNED BY: BALJINDER BRAR
CHECKED BY: JAMES P LEE
REVISED BY / DATE REVISED

LAST REVISION 3-21-14
DATE PLOTTED => 10-JUN-2014
TIME PLOTTED => 10:17

Dist	COUNTY	ROUTE	POST MILES TOTAL PROJECT	SHEET No.	TOTAL SHEETS
01	Lak	20	13.5/31.4	24	73

REGISTERED CIVIL ENGINEER 5-13-14 DATE

5-27-14
PLANS APPROVAL DATE

REGISTERED PROFESSIONAL ENGINEER BALJINDER S. BRAR No. C 67847 Exp 6-30-15 CIVIL STATE OF CALIFORNIA

THE STATE OF CALIFORNIA OR ITS OFFICERS OR AGENTS SHALL NOT BE RESPONSIBLE FOR THE ACCURACY OR COMPLETENESS OF SCANNED COPIES OF THIS PLAN SHEET.

THERMOPLASTIC PAVEMENT MARKING

LOCATION (PM)	Lt/Rt Med	ORIEN-TATION	TYPE/LEGEND	AREA SQFT	REMARKS
28.61	Rt	FEBT	XING	21	
28.62	Med	EB/WB	TYPE III ARROW (Lt)	84	2 EA OPPOSING
28.70	Rt	FNBT	STOP	22	HOOVER St
28.70	Rt		LIMIT LINE	12	HOOVER St
28.70	Rdwy		CROSS WALK	309	HOOVER St EAST SIDE
28.71	Med	EB/WB	TYPE III ARROW (Lt)	84	2 EA OPPOSING
24.72	Lt	FSBT	STOP	22	STORE EXIT
28.72	Lt		LIMIT LINE	24	STORE EXIT
28.79	Med	EB/WB	TYPE III ARROW (Lt)	84	2 EA OPPOSING
28.80	Lt	FSBT	STOP	22	STORE EXIT
28.80	Lt		LIMIT LINE	24	STORE EXIT
28.80	Lt	FSBT	XING	21	
28.81	Lt	FSBT	PED	18	
28.84	Rt	FSBT	STOP (2 EA)	44	KEYS Blvd
28.84	Rt		LIMIT LINE	40	KEYS Blvd
28.88	Med	EB/WB	TYPE III ARROW (Lt)	84	2 EA OPPOSING
29.35	Rt	FNBT	STOP	22	ORCHARD SHORES Dr
29.35	Rt		LIMIT LINE	26	ORCHARD SHORES Dr
29.37	Med	EB/WB	TYPE III ARROW (Lt)	84	2 EA OPPOSING
29.44	Med	EB/WB	TYPE III ARROW (Lt)	84	2 EA OPPOSING
29.53	Med	EB/WB	TYPE III ARROW (Lt)	84	2 EA OPPOSING
29.54	Rt	FNBT	STOP	22	SULPHUR BANK Dr
29.54	Rt		LIMIT LINE	38	SULPHUR BANK Dr
29.55	Med	EB/WB	TYPE III ARROW (Lt)	42	Lt TURN POCKET
29.85	Lt	FSBT	STOP	22	MORINE RANCH Rd
29.85	Lt		LIMIT LINE	35	MORINE RANCH Rd
31.32	Rt	FNBT	STOP (2 EA)	22	DEL WAY
31.32	Rt		LIMIT LINE	30	DEL WAY
31.36	Rt	FEBT	TYPE I 24'-0" ARROW	31	TO SB ROUTE 53
			SUBTOTAL	1,457	
			SUBTOTAL1 PDQ-10	4,057	
			SUBTOTAL2 PDQ-10	5,262	
			SUBTOTAL3 PDQ-11	2,109	
			SUBTOTAL4 PDQ-11	4,115	
			TOTAL	17,000	

REMOVE THERMOPLASTIC PAVEMENT MARKING

LOCATION (PM)	Lt/Rt Med	ORIEN-TATION	TYPE/LEGEND	AREA SQFT	REMARKS
18.48	Lt	FSBT	StOP	22	RANCHO VISTA Dr
19.03	Rt	FEBT	TYPE III ARROW (Lt)	42	Lt TURN POCKET
19.03	Rt	FEBT	TYPE V ARROW	33	THRU LANE
27.67	Rt	FEBT	Ped	18	
27.68	Rt	FEBT	Xing	21	
27.84	Lt	Rdwy	CROSS WALK	18	PINE St EAST SIDE
27.85	Med	EB/WB	TYPE III ARROW (Lt)	84	2 EA OPPOSING
27.89	Rdwy	Rdwy	CROSS WALK	453	END OF PARK
27.90	Med	EB/WB	TYPE III ARROW (Lt)	84	2 EA OPPOSING
27.97	Rdwy	Rdwy	CROSS WALK	294	FOOTHILL Blvd WEST SIDE
27.98	Med	FEBT	TYPE III ARROW (Lt)	84	2 EA OPPOSING
28.06	Med	FEBT	TYPE III ARROW (Lt)	84	2 EA OPPOSING
28.14	Med	FEBT	TYPE III ARROW (Lt)	84	2 EA OPPOSING
28.20	Med	FEBT	TYPE III ARROW (Lt)	84	2 EA OPPOSING
28.27	Med	EB/WB	TYPE III ARROW (Lt)	84	2 EA OPPOSING
28.32	Rt	FEBT	SLOW YELLOW	23	
28.32	Med	EB/WB	TYPE III ARROW (Lt)	84	2 EA OPPOSING
28.32	Rt	FEBT	SCHOOL YELLOW	35	
28.33	Rt	FEBT	Xing YELLOW	21	
28.39	Med	EB/WB	TYPE III ARROW (Lt)	84	2 EA OPPOSING
28.42	Lt	Rdwy	CROSS WALK YELLOW	325	HIGH VALLEY Rd
28.42	Drwy	Rdwy	CROSS WALK YELLOW	330	HIGH VALLEY Rd EAST SIDE
28.48	Med	EB/WB	TYPE III ARROW (Lt)	84	2 EA OPPOSING
28.49	Lt	FWBT	Xing YELLOW	21	
28.50	Lt	FWBT	SCHOOL YELLOW	35	
28.51	Lt	FWBT	SLOW YELLOW	23	
28.55	Med	EB/WB	TYPE III ARROW (Lt)	84	2 EA OPPOSING
28.60	Rt	FEBT	Ped	18	
28.61	Rt	FEBT	Xing	21	
28.62	Med	EB/WB	TYPE III ARROW (Lt)	84	2 EA OPPOSING
28.70	Rdwy	Rdwy	CROSS WALK	309	HOOVER St EAST SIDE
28.71	Med	EB/WB	TYPE III ARROW (Lt)	84	2 EA OPPOSING
28.79	Med	EB/WB	TYPE III ARROW (Lt)	84	2 EA OPPOSING
28.80	Lt	FSBT	Xing	21	
28.81	Lt	FSBT	Ped	18	
28.88	Med	EB/WB	TYPE III ARROW (Lt)	84	2 EA OPPOSING
29.37	Med	EB/WB	TYPE III ARROW (Lt)	84	2 EA OPPOSING
29.44	Med	EB/WB	TYPE III ARROW (Lt)	84	2 EA OPPOSING
29.53	Med	EB/WB	TYPE III ARROW (Lt)	84	2 EA OPPOSING
29.55	Med	EB/WB	TYPE III ARROW (Lt)	42	Lt TURN POCKET
31.36	Rt	FEBT	TYPE I 24'-0" ARROW	31	TO SB ROUTE 53
			TOTAL	3,686	

PAVEMENT DELINEATION QUANTITIES
PDQ-12

STATE OF CALIFORNIA - DEPARTMENT OF TRANSPORTATION
Caltrans DIVISION OF ENGINEERING

FUNCTIONAL SUPERVISOR: DEANN SPANGLER
CALCULATED-DESIGNED BY: BALJINDER BRAR
CHECKED BY: JAMES P LEE
REVISED BY
DATE REVISED

LAST REVISION 3-21-14
DATE PLOTTED => 10-JUN-2014
TIME PLOTTED => 10:17

(N) - NOT A SEPARATE PAY ITEM, FOR INFORMATION ONLY

REMOVE THERMOPLASTIC TRAFFIC STRIPE

LOCATION (PM) FROM	LOCATION (PM) TO	SIDE L+/R+	DETAIL No.	(N) DETAIL LENGTH LF	REMOVE THERMOPLASTIC TRAFFIC STRIPE 8" WHITE SOLID LF	4" WHITE SOLID LF	4" YELLOW SOLID LF	4" WHITE BROKEN (12-3) LF	4" YELLOW BROKEN (36-12) LF	REMARKS
13.50	13.58	L+	27B	406		406				TO SAYRE Ave
		R+	27B	393		393				
		L+	27C	62				13		
		R+	27C	48				10		
		Med	32	402			804		201	
13.58	13.65	L+	27B	275		275				SAYRE Ave TO LEVY Ave
		R+	27B	340		340				
		L+	27C	50				10		
		Med	32	301			602		151	
13.65	13.70	L+	27B	186		186				LEVY Ave TO KEELING Ave
		R+	27B	270		270				
		L+	27C	74				15		
		Med	32	271			542		136	
13.70	13.76	L+	27B	224		224				KEELING Ave TO CRUMP Ave
		R+	27B	277		277				
		L+	27C	126				25		
		Med	32	238			476		119	
13.76	13.84	L+	27B	436		436				CRUMP Ave TO HOWARD St
		R+	27B	380		380				
		L+	27C	68				14		
		R+	27C	89				18		
		Med	32	406			812		203	
13.84	13.97	L+	27B	690		690				HOWARD St TO BENTON Ave
		R+	27B	633		633				
		R+	27C	57				12		
		Med	32	672			1,344		336	
13.97	14.02	L+	27B	194		194				BENTON Ave TO HUDSON Ave
		R+	27B	178		178				
		L+	27C	56				11		
		R+	27C	56				11		
		Med	32	194			388		97	
14.02	14.26	L+	27B	1,164		1,164				HUDSON Ave TO DAWS Ave
		R+	27B	1,284		1,284				
		L+	27C	236				47		
		Med	32	1,198			2,396		599	
14.26	14.38	L+	27B	422		422				DAWS Ave TO BURPEE Dr
		R+	27B	638		638				
		L+	27C	106				21		
		Med	32	576			1152		288	
14.38	14.45	Med	22	281			562			BURPEE Dr TO HUTCHINS Rd
		L+	27B	698		698				250 FT TAPER Beg PM 13.95
		R+	27B	768		768				
		L+	27C	60				12		
		Med	29	250			1000			
		Med	32	185			370		93	
15.40	15.75	Med	6	872					55	SOUTH OF BARRETT SPRINGS Rd
		Med	19	712			712		45	
		Med	6	268					17	
		L+	27B	356		1848				
		R+	27B	440		1848				
18.00	18.32	Med	22	1,568			3,136			OGDEN Rd TO LAKESHORE Blvd
		L+	27B	1,534		1,534				
		R+	27B	1,625		1,625				
		L+	27C	84				4		
18.32	18.48	Med	22	782			1,564			LAKESHORE Blvd TO RANCHO VISTA Dr
		L+	27B	756		756				
		R+	27B	846		846				
		L+	27C	85				4		
SUBTOTAL						18,313	15.860	227	2,340	

Dist	COUNTY	ROUTE	POST MILES TOTAL PROJECT	SHEET No.	TOTAL SHEETS
01	Lak	20	13.5/31.4	25	73

REGISTERED CIVIL ENGINEER 5-13-14 DATE

5-27-14
PLANS APPROVAL DATE

REGISTERED PROFESSIONAL ENGINEER BALJINDER S. BRAR No. C 67847 Exp. 6-30-15 CIVIL STATE OF CALIFORNIA

THE STATE OF CALIFORNIA OR ITS OFFICERS OR AGENTS SHALL NOT BE RESPONSIBLE FOR THE ACCURACY OR COMPLETENESS OF SCANNED COPIES OF THIS PLAN SHEET.

REVISED BY | DATE REVISED
BALJINDER BRAR | JAMES P LEE
CALCULATED-DESIGNED BY | CHECKED BY
FUNCTIONAL SUPERVISOR
DEANN SPANGLER

STATE OF CALIFORNIA - DEPARTMENT OF TRANSPORTATION
Caltrans® DIVISION OF ENGINEERING

PAVEMENT DELINEATION QUANTITIES

PDQ-13

LAST REVISION 3-21-14 | DATE PLOTTED => 10-JUN-2014 | TIME PLOTTED => 10:17

(N) - NOT A SEPARATE PAY ITEM, FOR INFORMATION ONLY

REMOVE THERMOPLASTIC TRAFFIC STRIPE

LOCATION (PM)		SIDE	DETAIL No.	(N) DETAIL LENGTH	REMOVE THERMOPLASTIC TRAFFIC STRIPE					REMARKS
					8" WHITE SOLID	4" WHITE SOLID	4" YELLOW SOLID	4" WHITE BROKEN (12-3)	4" YELLOW BROKEN (36-12)	
FROM	TO	L†/R†		LF	LF	LF	LF	LF	LF	
18.48	18.58	Med	22	470			940			RANCHO VISTA Dr TO BELL RAY Ave
		L†	27B	468		468				
		R†	27B	520		520				
		L†	27C	55				11		
18.58	18.71	Med	22	670			1,340			BELL RAY Ave TO BENDER Dr
		L†	27B	652		652				
		R†	27B	636		636				
		L†	27C	67				14		
18.71	18.88	Med	22	916			1,832			BENDER Dr TO OAK CREST Ave
		L†	27B	888		888				
		R†	27B	774		774				
		L†	27C	82				17		
		R†	38	211	422					
18.88	19.04	Med	22	240			480			OAK CREST Ave TO LAUREL DELL Ave
		L†	27B	681		681				
		R†	27B	774		774				
		L†	27C	133				27		
		Med	29	504			2,016			
		Med	38	192	384					
19.04	19.18	Med	22	376			752			LAUREL DELL Ave TO ROSEMONT Dr
		L†	27B	665		665				
		R†	27B	744		744				
		L†	27C	97				97		
		Med	29	336			1,344			
19.18	21.09	Med	22	5,280			10,560			ROSEMONT Dr TO BRUNER Rd
		Med	19	1,090			1,090		218	
		Med	6	112					23	
		Med	19	712			712		142	
		Med	22	2,805			5,610			
		L†	27B	9,466		9,466				
		R†	27B	10,030		10,030				
		L†	27C	165				33		
		L†	38	120	240					TURNOUT
21.09	21.31	Med	22	1,109			2,218			BRUNER Rd TO DIANE C†
		L†	27B	918		918				
		R†	27B	1,154		1,154				
		L†	27C	177				36		
21.31	21.82	Med	22	2,636			5,272			DIANE C† TO CORA Dr
		L†	27B	2,618		2,618				
		R†	27B	2,573		2,573				
		L†	27C	158				32		
21.82	21.86	Med	22	168			336			CORA Dr TO VERNA WAY
		L†	27B	103		103				
		R†	27B	195		195				
		L†	27C	162				33		
21.86	22.59	Med	22	3,240			6,480			VERNA WAY TO PARADISE VALLEY Dr
		Med	29	336			1344			
		Med	22	168			336			
		L†	27B	3,297		3,297				
		R†	27B	3,156		3,156				
		R†	27C	149				30		
		L†	38	331	662					TURNOUT
		Med	38	338	676					WB L† TURN
		R†	38	374	748					TURNOUT
SUBTOTAL					3,132	40,312	42,662	330	383	

Dist	COUNTY	ROUTE	POST MILES TOTAL PROJECT	SHEET No.	TOTAL SHEETS
01	Lak	20	13.5/31.4	26	73

REGISTERED CIVIL ENGINEER 5-13-14 DATE

5-27-14
PLANS APPROVAL DATE

REGISTERED PROFESSIONAL ENGINEER BALJINDER S. BRAR No. C 67847 Exp. 6-30-15 CIVIL STATE OF CALIFORNIA

THE STATE OF CALIFORNIA OR ITS OFFICERS OR AGENTS SHALL NOT BE RESPONSIBLE FOR THE ACCURACY OR COMPLETENESS OF SCANNED COPIES OF THIS PLAN SHEET.

REVISED BY | DATE REVISED
BALJINDER BRAR | JAMES P LEE
CALCULATED-DESIGNED BY | CHECKED BY
FUNCTIONAL SUPERVISOR
DEANN SPANGLER

STATE OF CALIFORNIA - DEPARTMENT OF TRANSPORTATION
Caltrans® DIVISION OF ENGINEERING

PAVEMENT DELINEATION QUANTITIES
PDQ-14

LAST REVISION 10-23-13 | DATE PLOTTED => 10-JUN-2014 | TIME PLOTTED => 10:17

(N) - NOT A SEPARATE PAY ITEM, FOR INFORMATION ONLY

REMOVE THERMOPLASTIC TRAFFIC STRIPE

LOCATION (PM) FROM	LOCATION (PM) TO	SIDE L+/R+	DETAIL No.	(N) DETAIL LENGTH LF	REMOVE THERMOPLASTIC TRAFFIC STRIPE 8" WHITE SOLID LF	4" WHITE SOLID LF	4" YELLOW SOLID LF	4" WHITE BROKEN (12-3) LF	4" YELLOW BROKEN (36-12) LF	REMARKS
22.59	23.83	Med	22	192			384			PARADISE VALLEY Dr TO GLADYS St
		Med	29	360			1,440			
		Med	22	5,978			11,956			
		L+	27B	6,239		6,239				
		R+	27B	6,292		6,292				
		L+	27C	110				22		
		L+	38	200	400					TURNOUT
		R+	38	124	248					TURNOUT
23.83	23.96	Med	22	620			1,240			GLADYS St TO MARY St
		L+	27B	572		572				
		R+	27B	662		662				
		L+	27C	98				20		
23.96	24.20	Med	22	1,244			2,488			MARY St TO LINDEN Ln
		L+	27B	1,175		1,175				
		R+	27B	1,272		1,272				
		L+	27C	55				11		
24.20	24.31	Med	22	580			1,160			LINDEN Ln TO HARBOR Dr
		L+	27B	620		620				
		R+	27B	570		570				
		R+	27C	52				11		
24.31	24.43	Med	22	504			1,008			HARBOR Dr TO GLENHAVEN Dr
		L+	27B	472		472				
		R+	27B	553		553				
		L+	27C	100				20		
24.43	24.83	Med	22	2,070			4,140			GLENHAVEN Dr TO HARVEY Blvd
		L+	27B	2,012		2,012				
		R+	27B	2,119		2,119				
		L+	27C	100				20		
24.83	24.99	Med	22	872			1,744			HARVEY Blvd TO MITCHELL Rd
		L+	27B	783		783				
		R+	27B	899		899				
		L+	27C	134				27		
24.99	25.44	Med	22	2,280			4,560			MITCHELL Rd TO HENDERSON Dr
		L+	27B	2,185		2,185				
		R+	27B	2,330		2,330				
		L+	27C	118				24		
25.44	25.53	Med	22	440			880			HENDERSON Dr TO SPRING Rd
		L+	27B	366		366				
		R+	27B	478		478				
		L+	27C	100				20		
25.53	25.63	Med	22	500			1,000			SPRING Rd TO SWANSON Rd
		L+	27B	428		428				
		R+	27B	537		537				
		L+	27C	113				23		
25.63	25.78	Med	22	782			1,564			SWANSON Rd TO OLSON Rd
		L+	27B	712		712				
		R+	27B	824		824				
		L+	27C	87				18		
25.78	26.15	Med	22	1,932			3,864			OLSON Rd TO PINGREE Rd
		L+	27B	1,846		1,846				
		R+	27B	1,960		1,960				
		L+	27C	136				27		
26.15	26.45	Med	22	1,552			3,104			PINGREE Rd TO LAKEVIEW Dr
		L+	27B	1,430		1,430				
		R+	27B	1,598		1,598				
		L+	27C	188				38		
SUBTOTAL					648	38,934	40,532	281		

Dist	COUNTY	ROUTE	POST MILES TOTAL PROJECT	SHEET No.	TOTAL SHEETS
01	Lak	20	13.5/31.4	27	73

REGISTERED CIVIL ENGINEER 5-13-14 DATE

5-27-14
PLANS APPROVAL DATE

REGISTERED PROFESSIONAL ENGINEER BALJINDER S. BRAR No. C 67847 Exp. 6-30-15 CIVIL STATE OF CALIFORNIA

THE STATE OF CALIFORNIA OR ITS OFFICERS OR AGENTS SHALL NOT BE RESPONSIBLE FOR THE ACCURACY OR COMPLETENESS OF SCANNED COPIES OF THIS PLAN SHEET.

REVISED BY | DATE REVISED
BALJINDER BRAR | JAMES P LEE
CALCULATED-DESIGNED BY | CHECKED BY
FUNCTIONAL SUPERVISOR: DEANN SPANGLER

STATE OF CALIFORNIA - DEPARTMENT OF TRANSPORTATION
Caltrans® DIVISION OF ENGINEERING

PAVEMENT DELINEATION QUANTITIES

PDQ-15

LAST REVISION 3-21-14 | DATE PLOTTED => 10-JUN-2014 | TIME PLOTTED => 10:17

Dist	COUNTY	ROUTE	POST MILES TOTAL PROJECT	SHEET No.	TOTAL SHEETS
01	Lak	20	13.5/31.4	28	73

REGISTERED CIVIL ENGINEER 5-13-14 DATE

5-27-14
PLANS APPROVAL DATE

REGISTERED PROFESSIONAL ENGINEER BALJINDER S. BRAR No. C 67847 Exp. 6-30-15 CIVIL STATE OF CALIFORNIA

THE STATE OF CALIFORNIA OR ITS OFFICERS OR AGENTS SHALL NOT BE RESPONSIBLE FOR THE ACCURACY OR COMPLETENESS OF SCANNED COPIES OF THIS PLAN SHEET.

(N) - NOT A SEPARATE PAY ITEM, FOR INFORMATION ONLY

REMOVE THERMOPLASTIC TRAFFIC STRIPE

LOCATION (PM)		SIDE	DETAIL No.	(N) DETAIL LENGTH	REMOVE THERMOPLASTIC TRAFFIC STRIPE					REMARKS
					8" WHITE SOLID	4" WHITE SOLID	4" YELLOW SOLID	4" WHITE BROKEN (12-3)	4" YELLOW BROKEN (36-12)	
FROM	TO	L†/R†		LF	LF	LF	LF	LF	LF	
26.45	27.06	Med	22	3,100			6,200			LAKEVIEW Dr TO HILLSIDE Ln
		L†	27B	2,974		2,974				
		R†	27B	3,146		3,146				
		L†	27C	75				15		
27.06	27.62	Med	22	3,015			6,030			HILLSIDE Ln TO ISLAND Dr
		L†	27B	3,024		3,024				
		R†	27B	2,944		2,944				
		R†	27C	188				38		
27.62	27.70	Med	22	216			432			ISLAND Dr TO SHADY Ln
		Med	29	120			480			
		L†	27B	323		323				
		R†	27B	314		314				
		L†	27C	68				14		
27.70	27.80	L†	27B	460		460				SHADY Ln TO SHORT St
		R†	27B	474		474				
		L†	27C	78				16		
		R†	27C	118				24		
		Med	32	474			948		246	
27.80	27.84	L†	27B	118		118				SHORT St TO PINE St
		R†	27B	208		208				
		L†	27C	74				15		
		Med	32	152			304		76	
27.84	27.89	L†	27B	234		234				PINE St TO ACORN St
		R†	27B	232		232				
		Med	32	232			464		116	
27.89	28.02	L†	27B	600		600				ACORN St TO OAK GROVE Ave
		R†	27B	700		700				
		L†	27C	341				68		ACORN St, FOOTHILL Blvd, OAK GROVE Ave
		Med	32	623			1,246		312	
28.02	28.21	L†	27B	941		941				OAK GROVE Ave TO LAKE St
		R†	27B	963		963				
		L†	27C	136				27		
		R†	27C	132				27		
		Med	32	988			1,976		494	
28.21	28.33	L†	27B	638		638				LAKE St TO SHAUL St
		R†	27B	543		543				
		R†	27C	55				11		
		Med	32	614			1,228		307	
28.33	28.42	L†	27B	372		372				SHAUL St TO HIGH VALLEY Rd
		R†	27B	430		430				
		L†	27C	77				16		
		Med	32	384			768		192	
28.42	28.49	L†	27B	365		365				HIGH VALLEY Rd TO SCHINDLER St
		R†	27B	310		310				
		R†	27C	102				20		
		Med	32	312			624		156	
28.49	28.54	L†	27B	286		286				SCHINDLER St TO BUTLER St
		R†	27B	184		184				
		L†	27C	74				15		
		Med	32	248			496		124	
28.54	28.70	L†	27B	848		848				BUTLER St TO HOOVER St
		R†	27B	763		763				
		R†	27C	38				8		
		Med	32	815			1,630		408	
28.70	28.84	L†	27B	648		648				HOOVER St TO KEYS Blvd
		R†	27B	646		646				
		L†	27C	92				19		
		L†	27C	142				29		
		Med	32	665			1,330		333	
SUBTOTAL						23,688	24,156	362	2,764	

PAVEMENT DELINEATION QUANTITIES

PDQ-16

STATE OF CALIFORNIA - DEPARTMENT OF TRANSPORTATION
Caltrans DIVISION OF ENGINEERING

FUNCTIONAL SUPERVISOR: DEANN SPANGLER
CALCULATED-DESIGNED BY: BALJINDER BRAR
CHECKED BY: JAMES P LEE
REVISED BY
DATE REVISED

LAST REVISION 3-21-14
DATE PLOTTED => 10-JUN-2014
TIME PLOTTED => 10:17

Dist	COUNTY	ROUTE	POST MILES TOTAL PROJECT	SHEET No.	TOTAL SHEETS
01	Lak	20	13.5/31.4	29	73

REGISTERED CIVIL ENGINEER 5-13-14 DATE

5-27-14
PLANS APPROVAL DATE

REGISTERED PROFESSIONAL ENGINEER BALJINDER S. BRAR No. C 67847 Exp. 6-30-15 CIVIL STATE OF CALIFORNIA

THE STATE OF CALIFORNIA OR ITS OFFICERS OR AGENTS SHALL NOT BE RESPONSIBLE FOR THE ACCURACY OR COMPLETENESS OF SCANNED COPIES OF THIS PLAN SHEET.

(N) - NOT A SEPARATE PAY ITEM, FOR INFORMATION ONLY

REMOVE THERMOPLASTIC TRAFFIC STRIPE

LOCATION (PM)		SIDE	DETAIL No.	(N) DETAIL LENGTH	REMOVE THERMOPLASTIC TRAFFIC STRIPE					REMARKS
					8" WHITE SOLID	4" WHITE SOLID	4" YELLOW SOLID	4" WHITE BROKEN (12-3)	4" YELLOW BROKEN (36-12)	
FROM	TO	L†/R†		LF	LF	LF	LF	LF	LF	
28.84	29.35	L†	27B	2,622		2,622				KEYS Blvd TO ORCHARD SHORES Dr
		R†	27B	2,496		2,496				
		R†	27C	145				29		
		Med	32	242			484		121	
		Med	29	408			1,632			
		Med	22	252			504			
		Med	6	1,040					260	
		Med	22	168			336			
		Med	29	432			1,728			
29.35	29.54	Med	32	934			1,868		467	ORCHARD SHORES Dr TO SULPHUR BANK Dr
		L†	27B	994		994				
		R†	27B	821		821				
		R†	27C	190				38		
29.54	29.85	Med	22	130			260			SULFUR BANK Dr TO MORINE RANCH Rd
		L†	27B	1,424		1,424				
		R†	27B	1,534		1,534				
		L†	27C	218				44		
		Med	29	504			2,016			
		Med	22	905			1,810			
		Med	38	116	232					
29.85	31.32	Med	22	312			624			MORINE RANCH Rd TO DEL WAY
		Med	19	1,308			1,308		327	
		Med	22	6,192			12,384			
		L†	27B	7,566		7,566				
		R†	27B	7,496		7,496				
		R†	27C	139				28		
		R†	38	172	344					
		L†	38	192	384					
31.32	31.40	Med	22	402			804			DEL WAY TO END
		L†	27B	400		400				
		R†	27B	394		394				
		R†	36	282	1,128					
SHEET SUBTOTAL					2,088	25,747	25,758	139	1,175	
SUBTOTAL PDQ-13						18,313	15,860	227	2,340	
SUBTOTAL PDQ-14					3,132	40,312	42,662	330	383	
SUBTOTAL PDQ-15					648	38,934	40,532	281		
SUBTOTAL PDQ-16						23,688	24,156	362	2,764	
SUBTOTAL					5,868	146,994	148,968	1,339	6,662	
TOTAL					309,831					

STATE OF CALIFORNIA - DEPARTMENT OF TRANSPORTATION
Caltrans® DIVISION OF ENGINEERING

FUNCTIONAL SUPERVISOR: DEANN SPANGLER

CALCULATED-DESIGNED BY: BALJINDER BRAR
CHECKED BY: JAMES P LEE

REVISED BY
DATE REVISED

PAVEMENT DELINEATION QUANTITIES
PDQ-17

LAST REVISION 3-21-14
DATE PLOTTED => 10-JUN-2014
TIME PLOTTED => 10:17

Dist	COUNTY	ROUTE	POST MILES TOTAL PROJECT	SHEET No.	TOTAL SHEETS
01	Lak	20	13.5/31.4	30	73

REGISTERED CIVIL ENGINEER 5-13-14 DATE

5-27-14
PLANS APPROVAL DATE

REGISTERED PROFESSIONAL ENGINEER BALJINDER S. BRAR No. C 67847 Exp. 6-30-15 CIVIL STATE OF CALIFORNIA

THE STATE OF CALIFORNIA OR ITS OFFICERS OR AGENTS SHALL NOT BE RESPONSIBLE FOR THE ACCURACY OR COMPLETENESS OF SCANNED COPIES OF THIS PLAN SHEET.

NOTES:

1. REMOVE AND REPLACE AT THE SAME LOCATION.
2. POST LENGTHS GIVEN ARE APPROXIMATE.
3. "C" DIMENSION = VERTICAL CLEARANCE ETW TO BOTTOM OF SIGN PANEL.
4. ADD PANEL TO THE EXISTING SIGN.
5. REPLACE RED ON WHITE TEXT WITH BLACK ON WHITE TEXT.
6. CALIFORNIA SIGN CODES ARE DESIGNATED BY <CA> OTHERWISE, FEDERAL SIGN CODES ARE SHOWN.

(N) - NOT A SEPARATE PAY ITEM, FOR INFORMATION ONLY

ABBREVIATIONS:

Refl - REFLECTIVE

ROADSIDE SIGN QUANTITIES

LOCATION		SIGN CODE (N)		PANEL SIZE (N)	"C" DIM	SIGN POST (N)		ROADSIDE SIGN-ONE POST	REMOVE ROADSIDE SIGN	REMARKS
PM (Approx)	SIDE	FEDERAL	CALIFORNIA	INCHES	ft	SIZE INCHES	LENGTH ft	EA	EA	
14.96	EB		R3 (45)	48 x 60	5	6 x 6	19	1	1	SEE NOTE 1
18.35	EB			36 x 42	5	4 x 6	17	1	1	SEE NOTES 1 & 5
19.56	EB			36 x 42	5	4 x 6	17	1	1	SEE NOTES 1 & 5
20.22	EB			36 x 42	5	4 x 6	17	1	1	SEE NOTES 1 & 5
21.12	EB			36 x 42	5	4 x 6	17	1	1	SEE NOTES 1 & 5
23.10	EB		R47	52 x 36	5	4 x 6	15	1	1	SEE NOTE 1
28.19	EB		S4-3P						1	
28.38	WB	S5-3		24 x 30	5	4 x 4	13	1	1	SEE NOTE 1
28.45	EB	W16-7P		24 x 12				1		SEE NOTE 4
28.57	EB	S5-3		24 x 30	5	4 x 4	13	1	1	SEE NOTE 1
29.48	EB	W8-6							1	
30.63	EB	W8-6							1	
							TOTAL	9	11	

ROADSIDE SIGN PANEL QUANTITIES (CONTRACTOR - FURNISHED)

LOCATION		(N)	(N)	SIGN	(N)	BACKGROUND (N)		LEGEND (N)		PROTECTIVE OVERLAY	ROADSIDE SIGN	
				(N)						(N)	FURNISH SINGLE SHEET ALUMINUM SIGN	
											UNFRAMED	
PM (Approx)	SIDE	SIGN CODE	SIGN MESSAGE/DESCRIPTION	SIZE (L X D)	NUMBER OF SIGNS	SHEETING COLOR	RETROREFLECTIVE ASTM TYPE	SHEETING COLOR	RETROREFLECTIVE ASTM TYPE	PREMIUM FILM	0.063"	0.080"
				INCHES	EA						SQFT	SQFT
14.96	EB	R3 <CA>	END 45 SPEED LIMIT	48 X 60	1	WHITE	III	BLACK	NON Refl	YES		20.0
18.35	EB		NO OVERNIGHT PARKING OR CAMPING	36 X 42	1	WHITE	III	BLACK	NON Refl	YES	10.5	
19.56	EB		NO OVERNIGHT PARKING OR CAMPING	36 X 42	1	WHITE	III	BLACK	NON Refl	YES	10.5	
20.22	EB		NO OVERNIGHT PARKING OR CAMPING	36 X 42	1	WHITE	III	BLACK	NON Refl	YES	10.5	
21.12	EB		NO OVERNIGHT PARKING OR CAMPING	36 X 42	1	WHITE	III	BLACK	NON Refl	YES	10.5	
23.10	EB	R47 <CA>	$1000 FINE FOR LITTERING	52 X 36	1	WHITE	II	BLACK	NON Refl	YES		13.0
28.38	WB	S5-3	END SCHOOL SPEED LIMIT	24 X 30	1	WHITE	III	BLACK	NON Refl	YES	5.0	
28.45	EB	W16-7P		24 X 12	1	FLUORESCENT YELLOW GREEN	III	BLACK	NON Refl	YES	2.0	
28.57	EB	S5-3	END SCHOOL SPEED LIMIT	24 X 30	1	WHITE	III	BLACK	NON Refl	YES	5.0	
										TOTAL	54.0	33.0

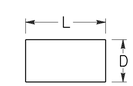

L = LENGTH OF PANEL
D = DEPTH OF PANEL

SIGN QUANTITIES
SQ-1

REVISED BY | DATE REVISED
BALJINDER BRAR | JAMES P LEE
CALCULATED-DESIGNED BY | CHECKED BY
FUNCTIONAL SUPERVISOR
DEANN SPANGLER
STATE OF CALIFORNIA - DEPARTMENT OF TRANSPORTATION
Caltrans® DIVISION OF ENGINEERING

LAST REVISION 3-21-14 | DATE PLOTTED => 10-JUN-2014 | TIME PLOTTED => 10:17

Dist	COUNTY	ROUTE	POST MILES TOTAL PROJECT	SHEET No.	TOTAL SHEETS
01	Lak	20	13.5/31.4	31	73

REGISTERED CIVIL ENGINEER 5-13-14 DATE

5-27-14
PLANS APPROVAL DATE

REGISTERED PROFESSIONAL ENGINEER BALJINDER S. BRAR No. C 67847 Exp 6-30-15 CIVIL STATE OF CALIFORNIA

THE STATE OF CALIFORNIA OR ITS OFFICERS OR AGENTS SHALL NOT BE RESPONSIBLE FOR THE ACCURACY OR COMPLETENESS OF SCANNED COPIES OF THIS PLAN SHEET.

(N) - NOT A SEPARATE PAY ITEM, FOR INFORMATION ONLY

ABBREVIATION:

LNMI - LANE MILE
TWLT - TWO WAY LEFT TURN
AR - ASPHALT-RUBBER BINDER
GPI - GEOSYNTHETIC PAVEMENT INTERLAYER
GSM - GEOCOMPOSITE STRIP MEMBRANE
RHMA (GG) - RUBBERIZED HOT MIX ASPHALT (GAP GRADED)
HMA (A) - HOT MIX ASPHALT (TYPE A)
ARBSC - ASPHALT RUBBER BINDER SEAL COAT

PAVEMENT STRUCTURE QUANTITIES

LOCATION (PM)		(N) AVERAGE WIDTH	COLD PLANE ASPHALT CONCRETE PAVEMENT (0.08' Max)	(0.15' Max)	(0.25' Max)	CRACK TREATMENT	GEOSYNTHETIC Pvmt INTERLAYER (PAVING GRID)	GEOSYNTHETIC Pvmt INTERLAYER (GEOCOMPOSITE STRIP MEMBRANE)	PAVING ASPHALT (BINDER, GEOSYNTHETIC PAVEMENT INTERLAYER)	ASPHALT-RUBBER BINDER	SCREENINGS	TACK COAT	HOT MIX ASPHALT (TYPE A)	RUBBERIZED HOT MIX ASPHALT (GAP GRADED)	REMARKS
FROM	TO	LF	SQYD	SQYD	SQYD	LNMI	SQYD	SQYD	TON	TON	TON	TON	TON	TON	
13.50	13.55	52	1,525			0.27				5.09	28	0.48	126	189	BEGIN PROJECT PM 13.50
13.55	14.50	52	1,830		798	4.12				78.93	435	7.40	2,393	3,589	COLD PLANE Lt Shldr PM: 13.65-13.76, 14.20-14.26
14.50	14.80	32	5,632			0.80				15.34	84	1.44	465	697	COLD PLANE PM: 14.44- 18.00
14.80	14.97	36	3,590			0.51				9.78	54	0.92	296	445	ARBSC PM 13.50-19.25; 26.60-28.85
14.97	16.30	28	16,098			3.10				59.50	328	5.58	1,804	2,705	
16.30	16.60	32	5,632			0.80				15.34	84	1.44	465	697	
16.60	16.84	40	4,832		800	0.80				15.34	84	1.44	465	697	CONFORM AT BRIDGE BB-EB (PM 16.85)
16.86	17.96	52	25,795		7,395	4.70				90.18	497	8.45	2,734	4,100	COLD PLANE Lt Shldr PM: 16.86-17.96
17.96	18.00	32	751			0.11				2.05	11	0.19	62	93	COLD PLANE Rt Shldr PM: 16.87-17.08, 17.26-17.39, 17.48-17.52
18.00	18.12	32				0.32				6.14	34	0.48	186	279	
18.12	18.35	44				0.84				16.17	89	1.26	490	735	
18.35	18.67	32				0.85				16.36	90	1.28	496	744	
18.67	18.79	44				0.44				8.44	46	0.66	256	384	
18.79	18.99	32				0.53				10.23	56	0.80	310	465	
18.99	19.04	56				0.35				6.78	37	0.52	206	308	LEFT TURN POCKET PM: 18.96-19.13
19.04	19.25	36				0.63				12.08	67	0.94	366	549	
19.25	19.35	36				0.30						0.27		262	
19.35	22.44	32				8.24						7.96		7,183	
22.44	22.57	44				0.48						0.57		416	
22.57	22.66	36				0.27						0.32		235	
22.66	24.18	32				4.45						4.10		3,885	LEFT TURN POCKET PM 22.53-22.71
24.18	24.52	48				1.36						1.22		1,186	TURN OUT PM: 23.04-23.09, 23.25-23.30, 23.92-23.97
24.52	24.78	32		3755		0.69						0.62		604	COLD PLANE Pvmt PM: 24.45-24.65
24.78	25.18	36		235		1.20						1.08		1046	COLD PLANE Rt Shldr PM: 25.11-25.16
25.18	25.38	34				0.57						0.51		494	
25.38	25.75	38				1.17						1.05		1021	
25.75	26.60	32		2253	11,264	2.27						2.04		1,976	COLD PLANE Pvmt PM: 25.77-25.89
26.60	27.60	32				2.67				51.13	282	3.99	1,550	2,325	COLD PLANE Pvmt PM: 26.88-27.08, 27.16-27.56
27.60	27.72	48				0.48				9.20	51	0.72	279	418	COLD PLANE Rt Shldr PM: 27.70-27.79, 28.17-28.20
27.72	28.62	60			3,847	4.50				86.28	475	6.74	2,615	3,923	COLD PLANE Lt Shldr PM: 27.85-27.92; 28.42-28.56; 28.80-28.93
28.62	29.05	64			1,877	2.29	2,933		3.12	23.52	130	3.44	1,333	1,999	COLD PLANE Rt Shldr PM: 28.63-28.68, 28.72-28.73, 28.84-29.05
29.05	29.50	40				1.69	6,600		7.02			2.53	982	1,560	
29.50	29.60	32				0.56	1,467		1.56			0.15	58	404	TWO WAY LEFT TURN LANE PM 29.31-29.68; END PROJECT PM 31.40
29.60	30.40	32				2.25	7,187		7.65			2.43		1,962	TWO WAY LEFT TURN LANE PM 29.31-29.68; END PROJECT PM 31.40
30.40	31.40	32				2.86						4.29	1,618	2,426	TWO WAY LEFT TURN LANE PM 29.31-29.68; END PROJECT PM 31.40
REPLACE AC SURFACING								24,600	26.15						FOR LOCATIONS SEE SUMMARY OF QUANTITIES SHEET Q-5
ROAD/INTERSECTION CONNECTIONS				17,402		2.47						5.62		2,602	FOR LOCATIONS SEE SUMMARY OF QUANTITIES SHEET Q-2
PRIVATE DRIVEWAY												0.98	450.9		FOR LOCATIONS SEE SUMMARY OF QUANTITIES SHEET Q-3
SAFETY EDGE (CASE B & C)														2,854	FOR LOCATIONS SEE SUMMARY OF QUANTITIES SHEET Q-4
COLD PLANE RUTTING PM 21.75-23.20			4,679												LOCATIONS: AS PER ENGINEER'S DIRECTION
HMA DIKE													75.8		
SUBTOTAL			70,364	23,645	25,981	59.94	18,187	24,600	45.50	537.88	2,962	83.91	20,081.7	55,457	
TOTAL			119,990			59.94	18,187	24,600	45.50	537.88	2,962	83.91	20,081.7	55,457	

NOTE: GPI (PAVING GRID): PM 28.85-29.60; PM 30.41-30.90

SUMMARY OF QUANTITIES
Q-1

STATE OF CALIFORNIA - DEPARTMENT OF TRANSPORTATION
Caltrans® DIVISION OF ENGINEERING

BALJINDER BRAR — REVISED BY
JAMES P LEE — DATE REVISED
CALCULATED-DESIGNED BY
CHECKED BY
FUNCTIONAL SUPERVISOR
DEANN SPANGLER

DATE PLOTTED => 10-JUN-2014
TIME PLOTTED => 10:17
LAST REVISION 3-21-14

Dist	COUNTY	ROUTE	POST MILES TOTAL PROJECT	SHEET No.	TOTAL SHEETS
01	Lak	20	13.5/31.4	32	73

REGISTERED CIVIL ENGINEER 5-13-14 DATE

5-27-14
PLANS APPROVAL DATE

REGISTERED PROFESSIONAL ENGINEER BALJINDER S. BRAR No. C 67847 Exp 6-30-15 CIVIL STATE OF CALIFORNIA

THE STATE OF CALIFORNIA OR ITS OFFICERS OR AGENTS SHALL NOT BE RESPONSIBLE FOR THE ACCURACY OR COMPLETENESS OF SCANNED COPIES OF THIS PLAN SHEET.

(N) - NOT A SEPARATE PAY ITEM, FOR INFORMATION ONLY

PAVEMENT STRUCTURE AT ROAD/INTERSECTION CONNECTIONS

LOCATION PM (Approx)	SIDE L+/R+	DESCRIPTION	(N) "L" LF	(N) "W" LF	COLD PLANE AC PAVEMENT (0.15' Max) SQYD	RHMA (GG) TON
13.50		BEGIN CONFORM	80	52	462	79
13.58	L+/R+	SAYRE Ave	14	44	190	33
13.65	L+	LEVY Ave	14	44	95	16
13.70	L+	KEELING Ave	14	44	95	16
13.76	L+	CRUMP Ave	14	156	269	46
13.76	L+	MANZANITA Ave	14	185	314	54
13.84	L+/R+	HOWARD St	14	44	190	33
13.97	R+	BENTON Ave	14	44	95	16
14.02	L+/R+	HUDSON Ave	14	44	190	33
14.26	L+	MANZANITA Ave	14	156	269	46
14.30	L+/R+	ROBINSON AVE/HOWES St	20	60	184	32
14.38	L+	BURPEE Dr	20	44	196	34
14.45	L+	HUNTCHINS Rd	14	30	73	13
14.60	R+	LAKESHORE Blvd	14	40	89	15
14.63	R+	UNNAMED STREET	14	40	89	15
14.94	R+	UNNAMED STREET	12	30	60	10
15.07	R+	UNNAMED STREET	14	40	89	15
15.29	L+	BARTLETT SPRINGS Rd	26	32	189	33
15.64	L+/R+	ELIOT WAY/STANFORD Ave	26	32	352	61
16.57	L+	FOOTHILL Dr	26	32	176	30
16.64	L+	GROVE St	26	32	176	30
16.75	L+	MOBILE HOME PARK	26	32	176	30
16.87	R+	LAKE Ave	20	32	122	21
16.89	L+	FIRST Ave	14	40	89	15
16.94	L+	SECOND Ave	14	40	89	15
17.00	L+	THIRD Ave	14	40	89	15
17.05	L+	FOURTH Ave	14	40	89	15
17.12	L+	FIFTH Ave	14	40	89	15
17.18	L+	SIXTH Ave	14	40	89	15
17.24	L+	SEVENTH Ave	14	40	89	15
17.29	L+	EIGHTH Ave	14	40	89	15
17.32	L+	NINTH Ave	14	40	89	15
17.38	L+	TENTH Ave	14	40	89	15
17.44	L+	ELEVENTH Ave	14	40	89	15
17.50	L+	TWELFTH Ave	14	40	89	15
17.56	L+	THIRTEENTH Ave	14	40	89	15
17.62	L+	FOURTEENTH Ave	14	40	89	15
17.68	L+	FIFTEENTH Ave	14	40	89	15
17.74	L+	SIXTEENTH Ave	14	40	89	15
17.80	L+	SEVENTEENTH Ave	14	40	89	15
17.93	L+	COUNTRY CLUB Rd	14	44	95	16
18.01	L+	OGDEN Rd	24	20	93	16
18.32	L+	LAKESHORE Blvd	24	40	179	31
18.48	L+	RANCHO VISTA Rd	14	40	89	15
18.58	L+	BELL RAY Ave	24	40	179	31
18.71	L+	BENDER Dr	24	40	179	31
18.88	L+	OAK CREST Ave	24	40	179	31
19.04	L+	LAUREL DELL Ave	28	60	283	49
19.18	L+	ROSEMONT Dr	24	40	179	31
21.09	L+	BRUNER Rd	34	44	306	32
21.31	L+	DIANE Ct	34	40	291	30
21.82	R+	CORA Dr	34	44	306	32
21.86	L+	VERNA WAY	34	40	291	30
22.59	R+	ENT PARADISE COVE SUBD	30	70	343	35
23.17	R+	UNNAMED St	22	64	218	22
		SUB TOTAL			8,863	1,398

* QUANTITY INCLUDED IN PAVEMENT STRUCTURE QUANTITIES TABLE SHEET Q-1

LOCATION PM (Approx)	SIDE L+/R+	DESCRIPTION	(N) "L" LF	(N) "W" LF	COLD PLANE AC PAVEMENT (0.15' Max) SQYD	RHMA (GG) TON
23.83	L+	GLADYS St	34	40	291	30
23.96	L+	MARY St	34	40	291	30
24.20	L+	LINDEN Ln	24	40	179	18
24.31	R+	GLENHAVEN POINT	12	40	73	8
24.43	L+	GLENHAVEN Dr	20	40	140	14
24.83	L+	HARVEY Blvd	34	40	291	30
24.99	L+	MITCHELL Rd	34	40	291	30
25.44	L+	HENDERSON Dr	32	40	267	28
25.53	L+	SPRING Rd	32	40	267	28
25.63	L+	SWANSON Rd	32	40	267	28
25.78	L+	OLSON Rd	34	40	291	30
26.15	L+	PINGREE ROAD	21	40	149	15
26.45	L+	LAKE VIEW DRIVE	24	40	179	18
26.62	L+	BERYL WAY	24	40	179	31
26.67	R+	GARDEN Ct	20	20	73	13
26.77	L+	PRIVATE Rd	20	20	73	13
27.05	L+	HILLSIDE Ln	24	20	125	22
27.06	R+	CHARLES WY	24	40	179	31
27.62	R+	ISLAND Dr	12	80	119	20
27.70	L+	SHADY Ln	20	40	140	24
27.77	L+	FOOTHILL Blvd	14	40	89	15
27.80	R+	SHORT St	14	40	89	15
27.84	L+	PINE St	14	40	89	15
27.87	R+	SHORT St	14	40	89	15
27.89	L+	ACORN St	14	44	84	14
27.92	L+	PRIVATE St	14	40	89	15
27.98	L+	FOOTHILL Blvd	14	40	89	15
28.02	L+	OAK GROVE Ave	14	150	249	43
28.21	L+/R+	OAK GRO. Ave/LAKE St	14	40	177	30
28.33	R+	SHAUL St	14	40	89	15
28.42	L+	HIGH VALLEY Rd	14	40	89	15
28.46	L+	CALTRANS MTC. YARD	14	40	89	15
28.49	R+	SCHINDLER St	14	40	89	15
28.54	R+	BUTLER St	14	40	89	15
28.65	R+	COMMERCIAL Dwy	10	20	37	6
28.70	R+	HOOVER St	14	40	89	15
28.84	R+	KEYS Blvd	14	40	89	15
29.35	R+	ORCHARD SHORES	14	44	95	16
29.54	L+/R+	ROUND MOUNT/SULPHUR BK	18	44	260	45
29.61	L+	PRIVATE Rd	14	40	89	9
29.84	L+	MORINE RANCH Rd	24	44	189	20
29.92	L+/R+	MORINE WAY/MILANO Ct	24	40	357	37
30.11	L+	MORINE RANCH Rd	24	40	179	18
30.43	R+	CATHOLIC CHURCH Rd	24	30	120	21
30.58	R+	WHISNER Ln	24	40	179	31
30.68	L+/R+	RED ROCK RD/WHISNER Ct	24	40	293	50
30.82	R+	PRIVATE Rd	14	40	89	15
30.88	R+	PRIVATE Rd	24	30	120	21
30.90	L+	PRIVATE Rd	14	40	89	15
31.37	R+	Y Rd	24	40	179	31
31.40		END CONFORM	100	66	733	126
		SUB TOTAL			8,539	1,204
		TOTAL			17,402*	2,602*

RUMBLE STRIP (GROUND-IN)

LOCATION (PM) FROM	TO	SIDE L+/R+	RUMBLE STRIP (HMA, GROUND-IN INDENTATIONS, MODIFIED) STA	SHOULDER RUMBLE STRIP (HMA, GROUND-IN INDENTATIONS, SINUSOIDAL) STA	REMARKS
14.43	14.59	L+/R+		16.9	DETAIL 27B
15.08	15.29		11.1		DETAIL 22
16.18	16.55		19.5		DETAIL 22
18.55	18.85	R+		15.8	DETAIL 27B
18.55	18.85		15.8		DETAIL 22
19.12	19.81		36.4		DETAIL 22
20.11	20.21		5.3		DETAIL 22
20.55	21.60		55.4		DETAIL 22
23.28	23.93		34.3		DETAIL 22
24.50	24.73	L+/R+		24.3	DETAIL 27B
24.50	24.80		15.8		DETAIL 22
25.08	25.38		15.8		DETAIL 22
25.15	25.30	L+/R+		15.8	DETAIL 27B
25.82	26.60		41.2		DETAIL 22
26.23	26.35	L+/R+		12.7	DETAIL 27B
26.80	27.08		14.8		DETAIL 22
26.86	27.00	L+/R+		14.8	DETAIL 27B
27.23	27.61		20.1		DETAIL 22
29.02	29.06		2.1		DETAIL 22
29.00	29.36			38.0	DETAIL 27B
29.25	29.30		2.6		DETAIL 22
29.70	29.94		12.7		DETAIL 22
29.94	30.18		12.7		DETAIL 19
30.18	30.59		21.6		DETAIL 22
TOTAL			337.2	138.3	

SUMMARY OF QUANTITIES

Q-2

STATE OF CALIFORNIA - DEPARTMENT OF TRANSPORTATION
Caltrans® DIVISION OF ENGINEERING

FUNCTIONAL SUPERVISOR: DEANN SPANGLER
CALCULATED-DESIGNED BY: BALJINDER BRAR
CHECKED BY: JAMES P LEE
REVISED BY / DATE REVISED

LAST REVISION 3-21-14
DATE PLOTTED => 10-JUN-2014
TIME PLOTTED => 10:17

Dist	COUNTY	ROUTE	POST MILES TOTAL PROJECT	SHEET No.	TOTAL SHEETS
01	Lak	20	13.5/31.4	33	73

REGISTERED CIVIL ENGINEER 5-13-14 DATE

5-27-14
PLANS APPROVAL DATE

REGISTERED PROFESSIONAL ENGINEER BALJINDER S. BRAR No. C 67847 Exp 6-30-15 CIVIL STATE OF CALIFORNIA

THE STATE OF CALIFORNIA OR ITS OFFICERS OR AGENTS SHALL NOT BE RESPONSIBLE FOR THE ACCURACY OR COMPLETENESS OF SCANNED COPIES OF THIS PLAN SHEET.

(N) - NOT A SEPARATE PAY ITEM, FOR INFORMATION ONLY

HOT MIX ASPHALT (DRIVEWAYS)

PRIVATE DRIVEWAYS					
LOCATION		(N) "W"	(N) "L"	(N) AREA	HMA (A)
PM	SIDE	LF	LF	SQYD	TON
13.51	R+	20	8	16	1.1
13.55	L+/R+	55	8	35	2.5
13.56	L+	35	8	24	1.7
13.60	L+/R+	90	8	54	3.9
13.63	L+	60	8	38	2.7
13.69	R+	30	8	21	1.5
14.05	R+	20	8	16	1.1
14.08	R+	20	8	16	1.1
14.11	L+/R+	30	8	42	3.0
14.16	L+	20	8	16	1.1
14.25	R+	20	8	16	1.1
14.27	R+	20	8	16	1.1
14.28	L+/R+	20	8	31	2.2
14.30	R+	20	8	16	1.1
14.34	R+	30	8	21	1.5
14.35	R+	20	8	16	1.1
14.58	L+	20	8	16	1.1
14.64	L+	20	8	16	1.1
15.36	R+	20	8	16	1.1
15.64	L+/R+	60	8	38	2.7
15.85	L+	20	8	16	1.1
15.87	R+	30	8	21	1.5
15.91	R+	30	8	21	1.5
15.93	R+	20	8	16	1.1
15.95	R+	20	8	16	1.1
15.96	R+	20	8	16	1.1
15.98	R+	60	8	38	2.7
16.05	R+	20	8	16	1.1
16.08	R+	20	8	16	1.1
16.11	R+	30	8	21	1.5
16.64	R+	20	8	16	1.1
16.69	L+	35	8	24	1.7
16.69	R+	20	8	16	1.1
16.73	R+	20	8	16	1.1
16.76	R+	30	8	21	1.5
16.83	L+	30	8	21	1.5
16.90	L+	35	8	24	1.7
16.94	L+	40	8	27	1.9
17.06	R+	20	8	16	1.1
17.09	R+	20	8	16	1.1
17.11	R+	30	8	21	1.5
17.14	R+	20	8	16	1.1
17.17	R+	20	8	16	1.1
17.21	R+	20	8	16	1.1
17.28	R+	35	8	24	1.7
17.33	R+	35	8	24	1.7
17.40	R+	20	8	16	1.1
17.41	R+	20	8	16	1.1
17.44	R+	20	8	16	1.1
17.51	R+	25	8	18	1.3
17.54	R+	25	8	18	1.3
		SUBTOTAL		1075	75.5

PRIVATE DRIVEWAYS					
LOCATION		(N) "W"	(N) "L"	(N) AREA	HMA (A)
PM	SIDE	LF	LF	SQYD	TON
17.57	R+	20	8	16	1.1
17.59	R+	20	8	16	1.1
17.62	R+	20	8	16	1.1
17.63	R+	20	8	16	1.1
17.65	R+	20	8	16	1.1
17.76	R+	30	8	21	1.5
17.83	R+	35	8	24	1.7
17.89	R+	30	8	21	1.5
18.03	R+	20	8	28	2.7
18.12	R+	20	8	28	2.7
18.15	R+	20	8	28	2.7
18.19	R+	20	8	28	2.7
18.21	L+	20	12	47	4.7
18.21	R+	30	8	36	3.6
18.23	L+	20	12	47	4.7
18.23	R+	30	8	36	3.6
18.25	R+	20	8	28	2.7
18.27	L+	20	8	28	2.7
18.27	R+	30	8	36	3.6
18.29	L+	20	8	28	2.7
18.31	L+/R+	20	8	55	5.5
18.34	L+	20	8	28	2.7
18.36	L+	20	8	28	2.7
18.48	R+	30	8	36	3.6
18.56	R+	25	8	32	3.2
19.85	L+	20	8	28	1.8
19.88	L+	20	8	28	1.8
22.90	L+	60	8	63	4.1
23.16	L+	60	8	63	4.1
23.95	L+	20	8	28	1.8
24.04	L+	20	8	28	1.8
24.16	R+	20	8	28	1.8
24.18	R+	20	8	28	1.8
24.20	R+	20	8	28	1.8
24.21	L+	20	8	28	1.8
24.23	L+	20	8	28	1.8
24.25	L+/R+	20	8	55	3.6
24.26	L+/R+	20	8	55	3.6
24.29	L+	20	8	28	1.8
24.30	R+	30	8	36	2.4
24.31	L+	30	8	36	2.4
24.32	L+/R+	20	8	55	3.6
24.33	L+	30	8	36	2.4
24.36	L+	20	8	28	1.8
24.39	L+	20	8	28	1.8
24.39	R+	35	8	41	2.7
24.42	L+	20	8	28	1.8
24.45	L+/R+	20	8	55	3.6
24.47	R+	20	8	28	1.8
24.79	R+	20	8	28	1.8
24.81	R+	20	8	28	1.8
		SUBTOTAL		1666	128.3

PRIVATE DRIVEWAYS					
LOCATION		(N) "W"	(N) "L"	(N) AREA	HMA (A)
PM	SIDE	LF	LF	SQYD	TON
24.82	R+	20	8	28	1.8
24.86	L+/R+	20	8	55	3.6
24.93	L+	20	8	28	1.8
24.97	L+/R+	20	8	55	3.6
25.03	L+/R+	20	8	55	3.6
25.05	R+	20	8	28	1.8
25.07	L+	20	8	28	1.8
25.09	R+	20	8	28	1.8
25.10	L+/R+	20	8	55	3.6
25.15	L+/R+	20	8	55	3.6
25.37	R+	20	8	28	1.8
25.38	R+	20	8	28	1.8
25.41	R+	20	8	28	1.8
25.42	R+	20	8	28	1.8
25.44	R+	20	8	28	1.8
25.47	L+	35	8	41	2.7
25.47	R+	20	8	28	1.8
25.51	L+/R+	20	8	55	3.6
25.53	R+	20	8	28	1.8
25.55	L+	20	8	28	1.8
25.58	L+/R+	20	8	55	3.6
25.62	R+	20	8	28	1.8
25.64	R+	20	8	28	1.8
25.65	L+	20	8	28	1.8
25.66	R+	20	8	28	1.8
25.70	R+	30	8	36	2.4
25.72	R+	20	8	28	1.8
25.74	R+	20	8	28	1.8
25.76	R+	20	8	28	1.8
25.82	L+/R+	20	8	55	3.6
25.85	L+	20	8	28	1.8
26.05	L+	20	8	28	1.8
26.07	L+	20	8	28	1.8
26.09	L+/R+	20	8	55	3.6
26.12	R+	20	8	28	1.8
26.22	L+	20	20	73	4.8
26.36	L+	20	8	28	1.8
26.37	L+	20	8	28	1.8
26.38	L+	20	8	28	1.8
26.43	L+	20	8	28	1.8
26.54	R+	30	8	36	2.4
26.69	R+	20	8	28	2.7
26.70	R+	20	8	28	2.7
26.72	R+	30	8	36	3.6
26.74	L+	20	8	28	2.7
26.75	L+	20	8	28	2.7
26.77	R+	30	8	36	3.6
26.82	R+	20	8	28	2.7
26.84	L+	30	8	36	3.6
26.86	L+	25	8	32	3.2
26.87	L+	20	8	28	2.7
		SUBTOTAL		1773	125.3

PRIVATE DRIVEWAYS					
LOCATION		(N) "W"	(N) "L"	(N) AREA	HMA (A)
PM	SIDE	LF	LF	SQYD	TON
27.11	L+	20	8	28	2.7
27.15	L+	20	8	28	2.7
27.17	L+	20	8	28	2.7
27.24	L+	20	8	28	2.7
27.27	L+	20	8	28	2.7
27.58	R+	25	8	32	3.2
27.62	L+	20	8	28	2.7
27.64	L+	20	8	28	2.7
27.66	L+	20	8	28	2.7
27.71	L+/R+	20	8	55	5.5
27.84	R+	20	8	28	2.7
27.88	R+	20	8	28	2.7
27.89	R+	20	8	28	2.7
27.91	R+	25	8	32	3.2
27.99	R+	20	8	28	2.7
28.03	R+	20	8	28	2.7
28.12	R+	20	8	28	2.7
28.15	L+/R+	20	8	55	5.5
28.16	L+/R+	20	8	55	5.5
28.26	L+	20	8	28	2.7
28.27	L+	20	8	28	2.7
28.37	L+	20	8	28	2.7
28.38	L+	20	8	28	2.7
28.44	L+	20	8	28	2.7
28.57	L+	30	8	36	3.6
28.61	R+	20	8	28	2.7
28.69	L+	30	8	36	3.6
28.70	L+	20	8	28	2.7
28.72	L+/R+	20	8	55	5.5
28.78	R+	20	8	28	2.7
28.79	R+	20	8	28	2.7
28.80	L+	35	8	41	4.1
28.82	R+	20	8	28	2.7
28.93	L+	25	8	32	3.2
29.61	L+	30	8	36	2.4
29.89	R+	20	8	28	1.8
29.93	R+	20	8	28	1.8
30.84	R+	20	8	28	2.7
30.91	R+	20	8	28	2.7
30.93	L+	20	8	28	2.7
		SUBTOTAL		1277	121.8
		TOTAL		5791	450.9*

* QUANTITIES INCLUDED IN ROADWAY QUANTITIES TABLE SHEET Q-1

SUMMARY OF QUANTITIES
Q-3

STATE OF CALIFORNIA - DEPARTMENT OF TRANSPORTATION
Caltrans DIVISION OF ENGINEERING

FUNCTIONAL SUPERVISOR: DEANN SPANGLER
CALCULATED-DESIGNED BY: BALJINDER BRAR
CHECKED BY: JAMES P LEE
REVISED BY / DATE REVISED

LAST REVISION 3-21-14
DATE PLOTTED => 10-JUN-2014
TIME PLOTTED => 10:17

Dist	COUNTY	ROUTE	POST MILES TOTAL PROJECT	SHEET No.	TOTAL SHEETS
01	Lak	20	13.5/31.4	34	73

REGISTERED CIVIL ENGINEER 5-13-14 DATE

5-27-14
PLANS APPROVAL DATE

REGISTERED PROFESSIONAL ENGINEER BALJINDER S. BRAR No. C 67847 Exp 6-30-15 CIVIL STATE OF CALIFORNIA

THE STATE OF CALIFORNIA OR ITS OFFICERS OR AGENTS SHALL NOT BE RESPONSIBLE FOR THE ACCURACY OR COMPLETENESS OF SCANNED COPIES OF THIS PLAN SHEET.

(N) - NOT A SEPARATE PAY ITEM, FOR INFORMATION ONLY

SAFETY EDGE/SHOULDER BACKING

DIRECTION	POST MILE		(N) LENGTH	(N) DEPTH	(N) SAFETY EDGE (REVISED Std PLAN RSP P75)	RUBBERIZED HOT MIX ASPHALT (GG)	SHOULDER BACKING
EB/WB	FROM	TO	LF	FT	CASE	TON	TON
WB	13.55	13.61	202	0.58	B	4.5	27
	13.82	13.85	114	0.58	B	2.5	15
	14.01	14.21	962	0.58	B	21.3	129
	14.39	14.50	507	0.58	B	11.2	68
	14.50	14.58	402	0.58	C	8.9	7
	14.58	14.71	666	0.58	B	14.7	89
	14.71	14.76	264	0.58	C	5.8	5
	14.76	16.20	7521	0.58	B	166.3	1007
	16.20	16.24	211	0.58	C	4.7	28
	16.24	16.85	3060	0.58	B	67.6	410
	18.03	18.09	317	0.58	B	7.0	42
	18.09	18.22	666	0.58	C	14.7	12
	18.22	19.25	5038	0.58	B	111.4	674
	19.25	19.30	264	0.48	B	5.8	28
	19.30	19.40	528	0.48	C	8.0	9
	19.40	19.57	898	0.48	B	13.6	96
	19.57	19.61	211	0.48	C	3.2	4
	19.61	20.60	5187	0.48	B	78.7	557
	20.60	20.71	581	0.48	C	8.8	10
	20.71	20.79	422	0.48	B	6.4	45
	20.79	20.83	211	0.48	C	3.2	4
	20.83	20.89	317	0.48	B	4.8	34
	20.89	21.08	1003	0.48	C	15.2	18
	21.08	21.14	273	0.48	B	4.1	29
	21.14	21.33	963	0.48	C	14.6	17
	21.33	21.39	317	0.48	B	4.8	34
	21.39	21.60	1109	0.48	C	16.8	20
	21.60	21.69	475	0.48	B	7.2	51
	21.69	21.81	634	0.48	C	9.6	11
	21.81	21.92	541	0.48	B	8.2	58
	21.92	22.36	2323	0.48	C	35.3	41
	22.36	22.81	2376	0.48	B	36.1	255
	22.81	22.91	468	0.48	C	7.1	8
	22.91	23.33	2158	0.48	B	32.7	232
	23.33	23.95	3214	0.48	C	48.8	57
	23.95	24.17	1102	0.48	B	16.7	118
	24.17	24.24	290	0.48	C	4.4	5
	24.25	24.50	1060	0.48	B	16.1	114
	24.50	24.82	1690	0.48	C	25.6	30
					SUBTOTAL	876.4	4398

SAFETY EDGE/SHOULDER BACKING

DIRECTION	POST MILE		(N) LENGTH	(N) DEPTH	(N) SAFETY EDGE (REVISED Std PLAN RSP P75)	RUBBERIZED HOT MIX ASPHALT (GG)	SHOULDER BACKING
EB/WB	FROM	TO	LF	FT	CASE	TON	TON
WB	24.82	25.07	1140	0.37	B	17.3	122
	25.07	25.11	191	0.37	C	2.9	3
	25.11	25.27	825	0.37	B	12.5	89
	25.27	25.35	422	0.37	C	6.4	8
	25.35	25.71	1666	0.37	B	25.3	179
	25.71	25.74	158	0.37	C	2.4	3
	25.74	25.92	870	0.37	B	13.2	93
	25.92	25.99	370	0.37	C	5.6	7
	25.99	26.25	1233	0.37	B	18.7	132
	26.25	26.39	679	0.37	C	10.3	12
	26.39	26.50	521	0.37	B	7.9	56
	26.50	26.60	1293	0.37	C	6.8	8
	26.60	26.76	1293	0.37	C	16.9	14
	26.76	26.90	644	0.37	B	14.2	86
	26.90	26.97	370	0.37	C	8.2	7
	26.97	27.03	317	0.37	B	7.0	42
	27.03	27.08	244	0.37	C	5.4	4
	27.09	27.21	574	0.37	B	12.7	77
	27.21	27.26	244	0.37	C	5.4	4
	27.26	27.30	191	0.37	B	4.2	28
	27.30	27.38	422	0.37	C	9.3	8
	27.38	27.40	106	0.37	B	2.3	14
	27.40	27.55	792	0.37	C	17.5	15
	27.55	27.57	106	0.37	B	2.3	14
	27.57	27.66	415	0.37	C	9.2	8
	27.66	27.77	501	0.37	B	11.1	67
	27.99	28.03	61	0.37	B	1.4	8
	28.07	28.19	594	0.37	C	13.1	11
	28.19	28.35	765	0.37	B	16.9	102
	28.35	28.42	290	0.37	C	6.4	5
	28.42	28.56	679	0.37	B	15.0	91
	28.58	28.75	838	0.37	B	18.5	112
	28.99	29.60	3826	0.37	B	68.2	413
	29.60	29.74	3826	0.37	B	9.2	65
	29.74	29.79	264	0.37	C	4.0	5
	29.79	30.09	1540	0.37	B	23.4	165
	30.09	30.13	171	0.37	C	2.6	3
	30.13	30.26	686	0.37	B	10.4	74
	30.26	30.38	634	0.37	C	9.6	11
	30.38	31.40	5326	0.37	C	117.7	713
					SUBTOTAL	571.4	2878

SAFETY EDGE/SHOULDER BACKING

DIRECTION	POST MILE		(N) LENGTH	(N) DEPTH	(N) SAFETY EDGE (REVISED Std PLAN RSP P75)	RUBBERIZED HOT MIX ASPHALT (GG)	SHOULDER BACKING
EB/WB	FROM	TO	LF	FT	CASE	TON	TON
EB	13.50	13.75	1111	0.58	B	24.6	149
	13.80	14.04	1135	0.58	B	25.1	152
	14.16	14.20	211	0.58	B	4.7	28
	14.25	14.43	820	0.58	B	18.1	110
	14.59	14.66	290	0.58	B	6.4	39
	14.79	16.81	10206	0.58	B	225.6	1366
	16.82	16.83	53	0.58	B	1.2	7
	16.98	17.30	1545	0.58	B	34.1	207
	17.39	17.49	468	0.58	B	10.3	63
	17.52	18.23	3369	0.58	B	74.5	451
	18.27	19.25	5069	0.58	B	112.1	678
	19.25	21.61	12356	0.48	B	187.5	1327
	21.80	21.83	114	0.48	B	1.7	12
	21.91	22.12	1109	0.48	B	16.8	119
	22.18	22.28	528	0.48	B	8.0	57
	22.37	24.51	10924	0.48	B	165.8	1173
	24.71	25.11	1932	0.48	B	29.3	208
	25.16	25.41	1260	0.48	B	19.1	135
	25.48	25.56	382	0.48	B	5.8	41
	25.75	25.85	488	0.48	B	7.4	52
	25.94	26.07	686	0.48	B	10.4	74
	26.10	26.60	2500	0.48	B	37.9	269
	26.60	26.95	1708	0.58	B	37.8	229
	27.06	27.26	1016	0.58	B	22.5	136
	27.59	27.74	692	0.58	B	15.3	93
	27.92	28.54	3014	0.58	B	66.6	403
	28.58	28.65	330	0.58	B	7.3	44
	28.70	28.72	46	0.58	B	1.0	6
	28.74	28.87	586	0.58	B	13.0	78
	29.09	29.60	2605	0.58	B	57.6	349
	29.60	29.73	598	0.48	B	9.1	64
	29.77	30.06	1491	0.48	B	22.6	160
	30.14	30.40	1313	0.48	B	19.9	141
	30.40	30.66	1313	0.58	B	29.0	176
	30.71	31.40	3533	0.58	B	78.1	473
					SUBTOTAL	1406.2	9069
					TOTAL	2,854*	16,345

* QUANTITIES INCLUDED IN ROADWAY QUANTITIES TABLE SHEET Q-1

SUMMARY OF QUANTITIES
Q-4

STATE OF CALIFORNIA - DEPARTMENT OF TRANSPORTATION
Caltrans DIVISION OF ENGINEERING

FUNCTIONAL SUPERVISOR: DEANN SPANGLER
CALCULATED-DESIGNED BY: BALJINDER BRAR
CHECKED BY: JAMES P LEE
REVISED BY / DATE REVISED

LAST REVISION 3-21-14
DATE PLOTTED => 10-JUN-2014
TIME PLOTTED => 10:17

Dist	COUNTY	ROUTE	POST MILES TOTAL PROJECT	SHEET No.	TOTAL SHEETS
01	Lak	20	13.5/31.4	35	73

REGISTERED CIVIL ENGINEER 5-13-14 DATE

5-27-14
PLANS APPROVAL DATE

REGISTERED PROFESSIONAL ENGINEER BALJINDER S. BRAR No. C 67847 Exp. 6-30-15 CIVIL STATE OF CALIFORNIA

THE STATE OF CALIFORNIA OR ITS OFFICERS OR AGENTS SHALL NOT BE RESPONSIBLE FOR THE ACCURACY OR COMPLETENESS OF SCANNED COPIES OF THIS PLAN SHEET.

(N) - NOT A SEPARATE PAY ITEM, FOR INFORMATION ONLY

* QUANTITIES INCLUDED IN ROADWAY QUANTITIES TABLE SHEET Q-1

REPLACE AC SURFACING

DIRECTION	POST MILE		(N) LENGTH	(N) WIDTH	(N) DEPTH	REPLACE AC SURFACING	(N) HOT MIX ASPHALT (TYPE A)	GEOSYNTHETIC Pvmt INTERLAYER (GEOCOMPOSITE STRIP MEMBRANE)	PAVING ASPHALT (BINDER, GEOSYNTHETIC Pvmt INTERLAYER)
EB/WB	FROM	TO	LF	LF	ft	CY	TON	SQYD	TON
EB	13.58	16.71	1510	12	0.33	277	571	504	0.54
	16.85	18.03	6230	12	0.25	865	1786	2077	2.21
	18.03	18.92	4699	12	0.33	870	1796	1567	1.67
	18.92	20.80	425	12	0.33	79	162	142	0.15
	21.50	21.80	1584	12	0.33	293	605	529	0.56
	21.82	21.84	100	12	0.33	19	38	34	0.04
	22.20	22.40	1056	12	0.33	196	404	352	0.37
	22.55	22.61	200	12	0.33	37	76	67	0.07
	22.63	22.68	264	12	0.33	49	101	89	0.09
	22.72	22.79	215	12	0.20	24	49	72	0.08
	24.11	24.45	425	12	0.33	79	162	142	0.15
	26.60	26.75	792	12	0.33	147	303	264	0.28
	26.75	26.80	264	12	0.25	37	76	89	0.09
	26.82	27.35	610	12	0.25	85	175	204	0.22
	27.46	27.58	150	12	0.33	28	57	51	0.05
	27.60	29.20	8448	12	0.33	1564	3229	2817	3.00
	29.40	29.70	1584	12	0.33	293	605	529	0.56
	30.40	31.20	4224	12	0.33	782	1614	1409	1.50
SUBTOTAL (EB)						5,724	11,809	10,938	11.63
WB	13.50	14.58	350	12	0.33	65	134	117	0.12
	14.80	14.97	898	12	0.33	166	343	300	0.32
	15.24	16.80	3550	12	0.33	651	1343	1184	1.26
	16.85	18.03	6230	12	0.25	865	1786	2077	2.21
	18.03	18.80	4066	12	0.33	753	1554	1356	1.44
	18.92	19.40	2534	12	0.33	469	969	845	0.90
	19.58	19.82	250	12	0.33	46	96	84	0.09
	21.00	21.07	370	12	0.33	68	141	124	0.13
	21.50	21.80	1584	12	0.33	293	605	529	0.56
	22.17	22.40	1214	12	0.33	225	464	405	0.43
	22.69	24.09	375	12	0.33	69	143	126	0.13
	26.60	26.75	792	12	0.33	147	303	264	0.28
	26.75	26.80	264	12	0.25	37	76	89	0.09
	26.80	27.45	3432	12	0.25	477	984	1145	1.22
	27.45	29.20	9240	12	0.33	1711	3531	3080	3.28
	29.40	29.70	1584	12	0.33	293	605	529	0.56
	30.40	31.20	4224	12	0.33	782	1614	1408	1.50
SUBTOTAL (WB)						7,117	14,691	13,662	14.52
TOTAL						12,841	26,500	24,600 *	26.15 *

DIKE

DIRECTION	POST MILE		REMOVE AC DIKE	PLACE HMA DIKE TYPE A	PLACE HMA DIKE TYPE E	PLACE HMA DIKE TYPE F	HMA (TYPE A)	NOTES
EB/WB	FROM	TO	LF	LF	LF	LF	TON	
WB	13.42	13.52	528		528		14.2	
EB	13.73	13.77	211		211		5.7	
WB	13.96	14.00	211		211		5.7	
EB	14.20	14.23	158		158		4.2	
WB	14.31	14.39	422		422		11.3	
WB	14.41	14.43	106		106		2.8	
WB	21.29	21.32	158		123		3.3	ELIMINATE FIRST 35' OF DIKE
WB	21.63	21.67	211		211		5.7	
EB	21.82	21.89	370		370		9.9	
EB	24.62	24.63	53			53	0.7	
EB	25.86	25.87	53			53	0.7	
EB	27.05	27.08	158		158		4.2	
WB	27.72	27.77	264	264			7.4	
TOTAL			2,903	264	2,498	106	75.8*	

HIGH FRICTION SURFACE TREATMENT

DIRECTION	POST MILE		(N) WIDTH	HIGH FRICTION SURFACE TREATMENT AREA
EB/WB	FROM	TO	LF	SQYD
EB/WB	13.98	14.03	52	1,525
EB/WB	14.96	15.00	28	657
EB/WB	15.60	15.63	28	493
EB/WB	16.22	16.26	28	657
EB/WB	17.25	17.33	52	2,441
EB/WB	17.74	17.81	52	2,135
EB/WB	17.97	18.00	32	563
EB/WB	23.40	23.45	32	939
EB/WB	25.08	25.38	34-36	6160
EB/WB	27.02	27.07	32	939
			TOTAL	16,509

SUMMARY OF QUANTITIES
Q-5

STATE OF CALIFORNIA - DEPARTMENT OF TRANSPORTATION
Caltrans DIVISION OF ENGINEERING

FUNCTIONAL SUPERVISOR: DEANN SPANGLER
CALCULATED-DESIGNED BY: BALJINDER BRAR
CHECKED BY: JAMES P LEE
REVISED BY
DATE REVISED

LAST REVISION 03-21-14
DATE PLOTTED => 10-JUN-2014
TIME PLOTTED => 10:17

Dist	COUNTY	ROUTE	POST MILES TOTAL PROJECT	SHEET No.	TOTAL SHEETS
01	Lak	20	13.5/31.4	36	73

REGISTERED CIVIL ENGINEER 5-13-14 DATE

5-27-14
PLANS APPROVAL DATE

REGISTERED PROFESSIONAL ENGINEER BALJINDER S. BRAR No. C 67847 Exp 6-30-15 CIVIL STATE OF CALIFORNIA

THE STATE OF CALIFORNIA OR ITS OFFICERS OR AGENTS SHALL NOT BE RESPONSIBLE FOR THE ACCURACY OR COMPLETENESS OF SCANNED COPIES OF THIS PLAN SHEET.

NOTES:

1. DEMOLISH EXISTING CONCRETE COLLAR IS NOT A SEPARATE PAY ITEM

(N) - NOT A SEPARATE PAY ITEM, FOR INFORMATION ONLY.

ABBREVIATIONS:

LCSD - LAKE COUNTY STORM DRAIN
S - STORM/SANITARY
CP - CATHODIC PROTECTION
Elipt- ELIPITICAL
CA - CALIFORNIA

ADJUST FRAME AND COVER TO GRADE

LOCATION			ADJUST FRAME AND COVER TO GRADE								(N) MINOR Conc (MINOR Str)	REMARKS
			WATER		STORM		SEWAGE		UTILITY			
PM	SIDE	OFFSET		SIZE*		SIZE*		SIZE*		SIZE*		
	Lt/Rt	ft	EA	INCH	EA	INCH	EA	INCH	EA	INCH	CY	
13.52	Rt	18					1	25.5			0.36	LCSD SANITARY SEWER
13.55	Rt	23							1	27x16.5	0.42	CALTRANS
13.57	Rt	17					1	25.5			0.36	LCSD SANITARY SEWER
13.57	Lt	19					1	25.5			0.36	SANITARY SEWER
13.60	Rt	24	1	33							0.44	LCSD RECLAIMED WATER
13.65	Lt	26					1	25.5			0.36	SANITARY SEWER
13.70	Lt	27					1	25.5			0.36	SANITARY SEWER
13.71	Lt	36							1	112x63	-	PG&E
13.76	Lt	25					1	25.5			0.36	SANITARY SEWER
13.84	Lt	39					1	25.5			0.36	SANITARY SEWER
13.93	Lt	21					1	25.5			0.36	SANITARY SEWER
13.95	Rt	29							1	32	0.43	BELL SYSTEM
13.96	Lt	26	1	15X12							0.25	LCSD Elipt COVER
14.02	Lt	17					1	25.5			0.36	SANITARY SEWER
14.09	Lt	18					1	25.5			0.36	SANITARY SEWER
14.13	Lt	23					1	25.5			0.36	SANITARY SEWER
14.20	Lt	31					1	25.5			0.36	SANITARY SEWER
14.34	Rt	24	1	33							0.44	LCSD RECLAIMED WATER
14.37	Lt	35					1	25.5			0.36	SANITARY SEWER
14.38	Lt	37					1	25.5			0.36	SANITARY SEWER
14.39	Lt	30							1	34	0.45	AT&T
14.40	Lt	22					1	25.5			0.36	SANITARY SEWER
14.47	Lt	14					1	25.5			0.36	SANITARY SEWER
14.50	Lt	12					1	25.5			0.36	SANITARY SEWER
14.56	Lt	15					1	25.5			0.36	SANITARY SEWER
14.61	Rt	17	1	33							0.44	LCSD RECLAIMED WATER
14.61	Lt	15					1	25.5			0.36	SANITARY SEWER
14.80	Lt	16.5							1	25x16	0.40	CALTRANS ELECTRIC
14.81	Rt	22	1	27X19							0.34	WATER
14.85	Rt	27			1	24					0.35	LCSD
14.86	Rt	18	1	33							0.44	LCSD RECLAIMED WATER
14.90	Lt	16.5							1	25x16	0.40	CALTRANS ELECTRIC
16.64	Rt	20					1	25.5			0.36	SANITARY SEWER
16.65	Rt	15	1	33							0.44	LCSD RECLAIMED WATER
16.65	Rt	19			1	25					0.36	LCSD
16.71	Rt	16			1	25					0.36	LCSD
16.84	Rt	31	1	12							0.23	CA WATER SERVICE
16.84	Rt	15					1	25.5			0.36	SANITARY SEWER
16.85	Lt	25	1	12							0.23	CP TEST
16.91	Lt	25							1	30	0.41	BELL SYSTEM
17.01	Rt	17					1	25.5			0.36	SANITARY SEWER
17.07	Rt	15					1	25.5			0.36	SANITARY SEWER
17.12	Rt	13					1	25.5			0.36	SANITARY SEWER
17.18	Rt	12					1	25.5			0.36	SANITARY SEWER
17.23	Lt	22	1	33							0.44	LCSD RECLAIMED WATER
17.26	Rt	12					1	25.5			0.36	SANITARY SEWER
17.28	Rt	12					1	25.5			0.36	SANITARY SEWER
SUBTOTAL-1			10		3		27		7		16.99	

* SIZE OF THE COVER

LOCATION			ADJUST FRAME AND COVER TO GRADE								(N) MINOR Conc (MINOR Str)	REMARKS
			WATER		STORM		SEWAGE		UTILITY			
PM	SIDE	OFFSET		SIZE*		SIZE*		SIZE*		SIZE*		
	Lt/Rt	ft	EA	INCH	EA	INCH	EA	INCH	EA	INCH	CY	
17.34	Rt	23					1	25.5			0.36	SANITARY SEWER
17.38	Rt	18					1	25.5			0.36	SANITARY SEWER
17.43	Rt	9					1	25.5			0.36	SANITARY SEWER
17.44	Rt	16					1	25.5			0.36	SANITARY SEWER
17.49	Rt	10					1	25.5			0.36	SANITARY SEWER
17.53	Rt	30	1	12							0.23	WATER
17.56	Rt	21					1	25.5			0.36	SANITARY SEWER
17.61	Rt	18					1	25.5			0.36	SANITARY SEWER
17.67	Rt	23					1	25.5			0.36	SANITARY SEWER
17.70	Rt	25					1	25.5			0.36	SANITARY SEWER
17.73	Rt	13					1	25.5			0.36	SANITARY SEWER
17.78	Rt	8					1	25.5			0.36	SANITARY SEWER
17.80	Rt	31	1	33							0.44	LCSD RECLAIMED WATER
17.80	Lt	23	1	12							0.23	CP TEST
17.82	Rt	22	1	33							0.46	LCSD RECLAIMED WATER
17.84	Rt	15					1	25.5			0.36	SANITARY SEWER
17.96	Rt	20			1	25					0.36	LCSD
18.04	Rt	16			1	25					0.36	LCSD
18.11	Rt	22			1	25					0.36	LCSD
18.14	Rt	19	1	33							0.44	LCSD RECLAIMED WATER
18.16	Rt	13			1	25					0.36	LCSD
18.20	Rt	16					1	25.5			0.36	SANITARY SEWER
18.21	Rt	16					1	25			0.36	LCSD
18.24	Rt	17					1	25			0.36	LCSD
18.30	Rt	18					1	25			0.36	LCSD
18.31	Rt	14	1	33							0.44	LCSD RECLAIMED WATER
18.34	Rt	24					1	33			0.44	LCSD
18.50	Rt	26					1	25			0.36	LCSD SANITARY SEWER
19.24	Lt	19	1	33							0.44	LCSD RECLAIMED WATER
19.52	Lt	16	1	33							0.44	LCSD RECLAIMED WATER
19.97	Lt	16			1	39					0.49	STORM DRAIN
19.98	Lt	16					1	33			0.44	LCSD EFFLUENT VALVE
20.41	Lt	15	1	33							0.44	LCSD RECLAIMED WATER
20.94	Lt	14	1	33							0.44	LCSD RECLAIMED WATER
21.09	Rt	16					1	25.5			0.36	SANITARY SEWER
21.16	Rt	16					1	25.5			0.36	SANITARY SEWER
21.24	Rt	15					1	25.5			0.36	SANITARY SEWER
21.30	Rt	15					1	25.5			0.36	SANITARY SEWER
21.32	Lt	18					1	30x40			0.58	SEWER
21.39	Rt	17					1	25.5			0.36	SANITARY SEWER
21.46	Rt	15					1	25.5			0.36	SANITARY SEWER
21.55	Rt	12					1	25.5			0.36	SANITARY SEWER
23.83	Lt	16			1	39x30					0.57	DRAINAGE INLET
23.83	Rt	16					1	52x82			0.98	SEWER
23.95	Rt	14							1	28x18	0.43	CALTRANS ELECTRIC
23.98	Rt	14							1	28x18	0.43	CALTRANS ELECTRIC
24.01	Rt	20							1	28x18	0.43	CALTRANS ELECTRIC
SUBTOTAL-2			10		6		28		3		18.87	

SUMMARY OF QUANTITIES

Q-6

STATE OF CALIFORNIA - DEPARTMENT OF TRANSPORTATION
Caltrans DIVISION OF ENGINEERING

FUNCTIONAL SUPERVISOR: DEANN SPANGLER
CALCULATED-DESIGNED BY: BALJINDER BRAR
CHECKED BY: JAMES P LEE
REVISED BY
DATE REVISED

LAST REVISION 3-21-14
DATE PLOTTED => 10-JUN-2014
TIME PLOTTED => 10:17

Dist	COUNTY	ROUTE	POST MILES TOTAL PROJECT	SHEET No.	TOTAL SHEETS
01	Lak	20	13.5/31.4	37	73

REGISTERED CIVIL ENGINEER 5-13-14 DATE

5-27-14
PLANS APPROVAL DATE

REGISTERED PROFESSIONAL ENGINEER BALJINDER S. BRAR No. C 67847 Exp 6-30-15 CIVIL STATE OF CALIFORNIA

THE STATE OF CALIFORNIA OR ITS OFFICERS OR AGENTS SHALL NOT BE RESPONSIBLE FOR THE ACCURACY OR COMPLETENESS OF SCANNED COPIES OF THIS PLAN SHEET.

NOTES:

1. DEMOLISH EXISTING CONCRETE COLLAR IS NOT A SEPARATE PAY ITEM

(N) - NOT A SEPARATE PAY ITEM, FOR INFORMATION ONLY.

ADJUST FRAME AND COVER TO GRADE

LOCATION			ADJUST FRAME AND COVER TO GRADE								(N) MINOR Conc (MINOR Str)	REMARKS
PM	SIDE	OFFSET	WATER		STORM		SEWAGE		UTILITY			
				SIZE*		SIZE*		SIZE*		SIZE*		
	Lt/Rt	ft	EA	INCH	EA	INCH	EA	INCH	EA	INCH	CY	
24.18	Rt	15	1	33							0.44	LCSD RECLAIMED WATER
24.21	Lt	24							1	32	0.43	BELL SYSTEM
24.26	Rt	18	1	33							0.44	LCSD RECLAIMED WATER
24.26	Rt	26	1	28x40							0.57	LCSD RECLAIMED WATER
24.26	Rt	21					1	7.5			0.19	SEWER
24.27	Lt	19			1	40x24					0.54	DRAINAGE INLET TYPE G2
24.30	Lt	22			1	40x24					0.54	DRAINAGE INLET TYPE G2
24.33	Lt	20							1	32	0.43	BELL SYSTEM
24.34	Lt	24			1	40x24					0.54	DRAINAGE INLET TYPE G2
24.36	Lt	21			1	40x24					0.54	DRAINAGE INLET TYPE G2
24.39	Rt	19	1	33							0.44	LCSD RECLAIMED WATER
24.44	Lt	14	1	12							0.23	CP TEST
24.44	Lt	17							1	33	0.44	BELL SYSTEM
24.45	Lt	14							1	24X18	0.41	CALTRANS ELECTRIC
24.83	Rt	15	1	33							0.44	LCSD RECLAIMED WATER
25.01	Lt	18	1	12							0.23	WATER
25.07	Rt	15	1	33							0.44	LCSD RECLAIMED WATER
25.08	Rt	24	1	12							0.23	WATER
25.51	Rt	16	1	33							0.44	LCSD RECLAIMED WATER
25.56	Lt	14	1	12							0.23	WATER
26.22	Lt	12	1	12							0.23	WATER
26.47	Rt	14							1	28X18	0.43	CALTRANS ELECTRIC
26.51	Rt	14							1	28X18	0.43	CALTRANS ELECTRIC
26.63	Lt	11					1	25.5			0.36	SANITARY SEWER
26.66	Lt	7					1	25.5			0.36	SANITARY SEWER
26.67	Rt	15	1	33							0.44	LCSD RECLAIMED WATER
26.68	Rt	17	1	33							0.44	LCSD RECLAIMED WATER
26.72	Lt	11					1	25.5			0.36	SANITARY SEWER
26.85	Lt	13					1	25.5			0.36	SANITARY SEWER
26.91	Lt	12					1	25.5			0.36	SANITARY SEWER
26.92	Lt	12					1	25.5			0.36	SANITARY SEWER
27.04	Lt	13					1	25.5			0.36	SANITARY SEWER
27.05	Lt	25	4	12							0.23	WATER
27.06	Lt	11					1	25.5			0.36	SANITARY SEWER
27.10	Lt	13					1	25.5			0.36	SANITARY SEWER
27.17	Lt	7					1	25.5			0.36	SANITARY SEWER
27.17	Rt	19	1	33							0.44	LCSD RECLAIMED WATER
27.27	Lt	13					1	25.5			0.36	SANITARY SEWER
27.32	Lt	9					1	25.5			0.36	SANITARY SEWER
27.40	Lt	9					1	25.5			0.36	SANITARY SEWER
27.48	Lt	10					1	25.5			0.36	SANITARY SEWER
27.54	Lt	9					1	25.5			0.36	SANITARY SEWER
27.59	Rt	29							1	28x18	0.43	CALTRANS ELECTRIC
27.61	Rt	35	1	12							0.23	WATER
27.62	Rt	30					1	25.5			0.36	SANITARY SEWER
27.62	Lt	13					1	25.5			0.36	SANITARY SEWER
27.63	Rt	32							1	28x18	0.43	CALTRANS ELECTRIC
SUBTOTAL-3			20		4		18		8		18.04	

LOCATION			ADJUST FRAME AND COVER TO GRADE								(N) MINOR Conc (MINOR Str)	REMARKS
PM	SIDE	OFFSET	WATER		STORM		SEWAGE		UTILITY			
				SIZE*		SIZE*		SIZE*		SIZE*		
	Lt/Rt	ft	EA	INCH	EA	INCH	EA	INCH	EA	INCH	CY	
27.65	Lt	12					1	25.5			0.36	SANITARY SEWER
27.66	Rt	14	1	33							0.44	LCSD RECLAIMED WATER
27.69	Lt	14					1	25.5			0.36	SANITARY SEWER
27.70	Rt	17					1	25.5			0.36	SANITARY SEWER
27.73	Lt	16					1	25.5			0.36	SANITARY SEWER
27.74	Rt	16					1	27			0.38	S
27.74	Rt	14							1	32	0.43	BELL SYSTEM
27.76	Lt	16					1	27			0.38	S
27.78	Rt	21	1	12							0.23	C.P. TEST
27.78	Rt	24					1	25.5			0.36	SANITARY SEWER
27.78	Lt	27					1	25.5			0.36	SANITARY SEWER
27.80	Rt	31	1	12							0.23	WATER
27.82	Lt	21	1	33							0.44	LCSD RECLAIMED WATER
27.83	Lt	26					1	25.5			0.36	SANITARY SEWER
27.84	Rt	31	3	12							0.70	WATER
27.85	Rt	23					1	25.5			0.36	SANITARY SEWER
27.86	Rt	37	1	12							0.23	WATER
27.86	Lt	33			1	40x24					0.54	DRAINAGE INLET TYPE G2
27.89	Lt	28			1	40x24					0.54	DRAINAGE INLET TYPE G1
27.91	Rt	32	1	12							0.23	WATER
27.92	Lt	27			1	40x24					0.54	DRAINAGE INLET TYPE G1
27.92	Rt	19			1	25.5					0.36	S
27.99	Rt	31	3	12							0.70	WATER
27.99	Lt	27	1	12							0.23	WATER
28.01	Lt	24			1	27					0.38	S
28.02	Rt	21					1	25.5			0.36	SANITARY SEWER
28.03	Lt	20			1	40x24					0.54	DRAINAGE INLET TYPE G1
28.06	Rt	31	1	12							0.23	WATER
28.06	Lt	17					1	25.5			0.36	SANITARY SEWER
28.07	Rt	21					1	25.5			0.36	SANITARY SEWER
28.08	Lt	14							1	33	0.44	BELL SYSTEM
28.11	Lt	20					1	25.5			0.36	SANITARY SEWER
28.11	Rt	12					1	25.5			0.36	SANITARY SEWER
28.12	Rt	27	3	12							0.70	WATER
28.12	Lt	20					1	25.5			0.36	SANITARY SEWER
28.12	Lt	22	1	33							0.44	LCSD RECLAIMED WATER
28.12	Rt	20					1	25.5			0.36	SANITARY SEWER
28.16	Rt	34	1	12							0.23	WATER
28.16	Rt	23	4	12							0.93	WATER
28.17	Lt	20					1	25.5			0.36	SANITARY SEWER
28.17	Rt	18					1	25.5			0.36	SANITARY SEWER
28.18	Rt	23	1	12							0.23	WATER
28.21	Rt	35	3	12							0.70	WATER
28.21	Lt	18					1	25.5			0.36	SANITARY SEWER
28.21	Rt	21					1	25.5			0.36	SANITARY SEWER
28.22	Rt	35	3	12							0.70	WATER
28.27	Rt	33	2	12							0.47	WATER
SUBTOTAL-4			32		6		21		2		19.43	

* SIZE OF THE COVER

SUMMARY OF QUANTITIES

Q-7

STATE OF CALIFORNIA - DEPARTMENT OF TRANSPORTATION
Caltrans DIVISION OF ENGINEERING

FUNCTIONAL SUPERVISOR: DEANN SPANGLER
CALCULATED-DESIGNED BY: BALJINDER BRAR
CHECKED BY: JAMES P LEE
REVISED BY / DATE REVISED

LAST REVISION 3-21-14
DATE PLOTTED => 10-JUN-2014
TIME PLOTTED => 10:17

Dist	COUNTY	ROUTE	POST MILES TOTAL PROJECT	SHEET No.	TOTAL SHEETS
01	Lak	20	13.5/31.4	38	73

REGISTERED CIVIL ENGINEER 5-13-14 DATE

5-27-14
PLANS APPROVAL DATE

REGISTERED PROFESSIONAL ENGINEER BALJINDER S. BRAR No. C 67847 Exp 6-30-15 CIVIL STATE OF CALIFORNIA

THE STATE OF CALIFORNIA OR ITS OFFICERS OR AGENTS SHALL NOT BE RESPONSIBLE FOR THE ACCURACY OR COMPLETENESS OF SCANNED COPIES OF THIS PLAN SHEET.

NOTES:

1. DEMOLISH EXISTING CONCRETE COLLAR IS NOT A SEPARATE PAY ITEM

(N) - NOT A SEPARATE PAY ITEM, FOR INFORMATION ONLY.

ADJUST FRAME AND COVER TO GRADE

LOCATION			ADJUST FRAME AND COVER TO GRADE								(N) MINOR Conc (MINOR Str)	REMARKS
PM	SIDE	OFFSET	WATER		STORM		SEWAGE		UTILITY			
				SIZE*		SIZE*		SIZE*		SIZE*		
	Lt/Rt	ft	EA	INCH	EA	INCH	EA	INCH	EA	INCH	CY	
28.28	Lt	19					1	25.5			0.36	SANITARY SEWER
28.28	Rt	20					1	25.5			0.36	SANITARY SEWER
28.33	Rt	38	2	12, 8							0.30	WATER
28.34	Rt	21					1	25.5			0.36	SANITARY SEWER
28.39	Rt	29	3	12							0.70	WATER
28.39	Rt	21					1	10x8			0.21	SANITARY SEWER
28.42	Rt	16					1	25.5			0.36	SANITARY SEWER
28.44	Rt	25			1	40x24					1.08	DRAINAGE INLET TYPE G2
28.46	Rt	29	1	12							0.23	WATER
28.51	Rt	39	2	12							0.47	WATER
28.51	Rt	18					1	25.5			0.36	SANITARY SEWER
28.52	Lt	24	1	33							0.44	LCSD RECLAIMED WATER
28.52	Lt	26	1	33							0.44	LCSD RECLAIMED WATER
28.56	Rt	20	2	12							0.47	WATER
28.61	Rt	20					1	10x8			0.21	ELLIPTICAL SEWER
28.65	Rt	21					1	25.5			0.36	SANITARY SEWER
28.72	Rt	23					1	25.5			0.36	SANITARY SEWER
28.79	Rt	23					1	25.5			0.36	SANITARY SEWER
28.80	Lt	30			1	36					0.50	DRAINAGE INLET TYPE GCP
28.85	Rt	30	1	12							0.23	WATER
28.85	Lt	23					1	25.5			0.36	SEWER
28.85	Lt	27					1	25.5			0.36	SEWER
28.86	Rt	20					1	25.5			0.36	SANITARY SEWER
28.86	Rt	30	1	12							0.23	WATER
28.92	Rt	30	1	12							0.23	WATER
29.30	Lt	25	1	12							0.23	C.P. TEST
29.35	Rt	25	1	12							0.23	WATER
29.53	Rt	19	5	12							1.16	WATER
SUBTOTAL			22		2		13		-		11.32	
SUBTOTAL-1			10		3		27		7		16.99	
SUBTOTAL-2			10		6		28		3		18.87	
SUBTOTAL-3			20		4		18		8		18.04	
SUBTOTAL-4			32		6		21		2		19.43	
SUBTOTAL			94		21		107		20		84.11	
TOTAL			242									

* SIZE OF THE COVER

DRAINAGE ITEMS

LOCATION			EXISTING GRATE INFORMATION			Misc IRON AND STEEL
PM	SIDE	OFFSET	SIZE	TYPE	EA (N)	
	Lt/Rt	ft	INCH X INCH			LB
14.62	Lt	22	40 x 36	18-9X	2	374
16.89	Lt	26	40 x 24	24-12X	1	239
17.05	Rt	26	40 x 24	24-12X	1	239
17.05	Lt	31	40 x 24	24-12X	1	239
17.22	Lt	37	40 x 24	24-12X	1	239
17.39	Lt	26	40 x 24	24-12X	1	239
17.49	Lt	26	40 x 24	24-12X	1	239
17.65	Lt	26	40 x 24	24-12X	1	239
17.94	Lt	14	40 x 24	24-12X	1	239
25.66	Lt	14	40 x 36	18-9X	2	374
27.47	Lt	14	36	36RX	1	215
TOTAL						2,875

SUMMARY OF QUANTITIES
Q-8

STATE OF CALIFORNIA - DEPARTMENT OF TRANSPORTATION
Caltrans DIVISION OF ENGINEERING

CALCULATED-DESIGNED BY: BALJINDER BRAR
CHECKED BY: JAMES P LEE
FUNCTIONAL SUPERVISOR: DEANN SPANGLER
REVISED BY / DATE REVISED

LAST REVISION 3-21-14
DATE PLOTTED => 10-JUN-2014
TIME PLOTTED => 10:17

Dist	COUNTY	ROUTE	POST MILES TOTAL PROJECT	SHEET No.	TOTAL SHEETS
01	Lak	20	13.5/31.4	39	73

REGISTERED CIVIL ENGINEER 5-13-14 DATE

5-27-14
PLANS APPROVAL DATE

REGISTERED PROFESSIONAL ENGINEER BALJINDER S. BRAR No. C 67847 Exp. 6-30-15 CIVIL STATE OF CALIFORNIA

THE STATE OF CALIFORNIA OR ITS OFFICERS OR AGENTS SHALL NOT BE RESPONSIBLE FOR THE ACCURACY OR COMPLETENESS OF SCANNED COPIES OF THIS PLAN SHEET.

(N): NOT A SEPARATE PAY ITEM, FOR INFORMATION ONLY

ABBREVIATIONS:

SRT - TERMINAL SYSTEM (TYPE SRT)
INL - ALTERNATIVE IN-LINE TERMINAL SYSTEM
FLD - ALTERNATIVE FLARED TERMINAL SYSTEM
TWB - TRANSITION RAILING (TYPE WB)
SFT - END ACHOR ASSEMBLY (TYPE SFT)
RCTA - RETURN CAP TYPE A
NC - NO CHANGE

GUARD RAILING

LOCATION / DESCRIPTION											TERMINAL SYSTEMS							
POST MILE		DIRECTION	(N) EXISTING LENGTH	(N) EXISTING LEADER	(N) EXISTING TRAILER	(N) PROPOSED LEADER	(N) PROPOSED TRAILER	MIDWEST GUARDRAIL SYSTEM (WOOD POST)	ADJUST GUARDRAIL	VEGETATION CONTROL (MINOR CONCRETE)	ALTERNATIVE IN-LINE TERMINAL SYSTEM	(N) ADJUST TERMINAL SYSTEM	GUARD RAILING DELINEATOR	OBJECT MARKER (TYPE P)	OBJECT MARKER (TYPE L-1)	RESET MARKER	(N) MBGR/MGS LAYOUT TYPE	COMMENTS
FROM	TO	NB/SB	LF					LF	LF	SQYD	EA	EA	EA	EA	EA	EA		
14.43	14.59	NB	797	SRT	INL	NC	NC		797	446		2	5			2	11H	MBGR
14.64	14.76	NB	661	SRT	INL	NC	NC		661	377		2	6			2	11H	MBGR
21.58	21.77	NB	1000	FLD	INL	NC	NC		1000	540		2	19			2	11H	MBGR
22.00	22.05	NB	274	SRT	SRT	NC	NC		274	187		2	4			2	11E	MBGR
22.23	22.34	NB	545	INL	SRT	NC	NC		545	309		2	13			1	11J	MBGR
24.62	24.63	NB	64	SRT	RCTA	NC	NC		64	56		1	2					MBGR AT STONE WALLS
25.79	25.80	NB	64	SRT	RCTA	NC	NC		64	56		1	1		1			MBGR AT STONE WALLS
25.86	25.87	NB	62	SRT	RCTA	NC	NC		62	56		1	1					MBGR AT STONE WALLS
26.01	26.07	NB	322	SRT	INL	NC	NC		322	203		2	4			2	11H	MBGR
26.90	26.91	NB	64	SRT	RCTA	NC	NC		64	56		1	1		1			MBGR AT STONE WALLS
27.18	27.19	NB	62	SRT	RCTA	NC	NC		62	56		1	1		1	2	11H	MBGR AT STONE WALLS
27.26	27.28	NB	115	SRT	RCTA	NC	NC		115	59		1	1		1	2		MBGR AT STONE WALLS
27.53	27.54	NB	76	SRT	RCTA	NC	NC		76	56		1	1			2		MBGR AT STONE WALLS
29.14	29.18	SB				INL	INL	50.0		96	2		1	1			16D	MGS AT HEADWALL
29.14	29.18	NB				INL	INL	50.0		96	2		1	1			16D	MGS AT HEADWALL
30.58	30.60	NB	135	SRT	SRT	NC	NC		135	117		2	2			1	16E	MBGR
TOTAL								100	4241	2766	4	21	63	2	4	18		

CABLE RAILING

POST MILE		LOCATION / DESCRIPTION		COMMENTS
		SIDE	CABLE RAILING	
FROM	TO	L+/RT	LF	
29.15	29.17	L+	68	AT HEADWALL
29.15	29.17	R+	68	AT HEADWALL
TOTAL			136	

SUMMARY OF QUANTITIES
Q-9

STATE OF CALIFORNIA - DEPARTMENT OF TRANSPORTATION
Caltrans DIVISION OF ENGINEERING

FUNCTIONAL SUPERVISOR: DEANN SPANGLER
CALCULATED-DESIGNED BY: BALJINDER BRAR
CHECKED BY: JAMES P LEE
REVISED BY
DATE REVISED

LAST REVISION 3-21-14
DATE PLOTTED => 10-JUN-2014
TIME PLOTTED => 10:17

Dist	COUNTY	ROUTE	POST MILES TOTAL PROJECT	SHEET No.	TOTAL SHEETS
01	Lak	20	13.5/31.4	40	73

REGISTERED CIVIL ENGINEER 5-13-14 DATE

5-27-14
PLANS APPROVAL DATE

REGISTERED PROFESSIONAL ENGINEER BALJINDER S. BRAR No. C 67847 Exp. 6-30-15 CIVIL STATE OF CALIFORNIA

THE STATE OF CALIFORNIA OR ITS OFFICERS OR AGENTS SHALL NOT BE RESPONSIBLE FOR THE ACCURACY OR COMPLETENESS OF SCANNED COPIES OF THIS PLAN SHEET.

TEMPORARY DRAINAGE INLET PROTECTION

LOCATION			TEMPORARY DRAINAGE INLET PROTECTION	
PM	SIDE	OFFSET	INLET SIZE	EA
	L+/R+	ft	INCH X INCH	
14.21	L+	35	40 x 36	1
14.26	L+	35	40 x 24	1
14.62	L+	22	40 x 36	1
14.65	L+	22	40 x 36	1
14.65	L+	22	48 x 15	1
14.82	R+	32	40 x 24	1
15.95	L+	24	40 x 24	1
16.88	L+	26	40 x 24	1
16.89	R+	33	40 x 24	1
16.89	L+	26	40 x 24	1
16.93	R+	29	40 x 24	1
16.93	R+	33	18 x 20	1
16.93	L+	26	40 x 24	1
16.94	L+	26	40 x 24	1
16.97	R+	21	40 x 24	1
16.99	R+	27	40 x 24	1
17.00	L+	26	40 x 24	1
17.01	L+	26	40 x 24	1
17.05	R+	26	40 x 24	1
17.05	L+	31	40 x 24	1
17.06	L+	26	40 x 24	1
17.11	R+	25	40 x 24	1
17.12	L+	26	40 x 24	1
17.14	L+	26	40 x 24	1
17.19	L+	26	40 x 24	1
17.20	L+	26	40 x 24	1
17.22	L+	37	40 x 24	1
17.22	R+	26	40 x 24	1
17.24	L+	26	40 x 24	1
17.26	L+	26	40 x 24	1
17.30	L+	26	40 x 24	1
17.31	L+	26	40 x 24	1
17.32	L+	26	40 x 24	1
17.33	L+	26	40 x 24	1
17.38	L+	26	40 x 24	1
17.39	R+	34	40 x 24	1
17.39	L+	26	40 x 24	1
17.39	L+	26	40 x 24	1
17.40	L+	26	40 x 24	1
17.43	R+	28	40 x 24	1
17.48	L+	26	40 x 24	1
17.49	R+	31	40 x 24	1
17.49	L+	26	40 x 24	1
			SUBTOTAL	43

LOCATION			TEMPORARY DRAINAGE INLET PROTECTION	
PM	SIDE	OFFSET	INLET SIZE	EA
	L+/R+	ft	INCH X INCH	
17.54	L+	26	40 x 24	1
17.56	L+	26	40 x 24	1
17.61	L+	26	40 x 24	1
17.62	L+	26	40 x 24	1
17.65	L+	26	40 x 24	1
17.66	L+	26	40 x 24	1
17.67	L+	26	40 x 24	1
17.72	L+	26	40 x 24	1
17.73	L+	26	40 x 24	1
17.77	L+	26	40 x 24	1
17.78	L+	26	40 x 24	1
17.83	L+	26	40 x 24	1
17.85	L+	26	40 x 24	1
17.92	L+	18	40 x 24	1
17.94	L+	14	40 x 24	1
17.99	R+	30	40 x 24	1
21.63	L+	18	36	1
24.26	R+	31	40 x 24	1
24.26	R+	34	40 x 24	1
24.27	R+	31	40 x 24	1
24.43	R+	28	36	1
25.00	R+	24	40 x 24	1
25.00	L+	18	36	1
25.40	R+	21	40 x 24	1
25.45	L+	16	40 x 24	1
25.66	L+	14	36 x 32	1
25.85	L+	24	78 x 48	1
26.82	L+	24	36	1
27.04	L+	16	36	1
27.07	R+	36	24 x 24	1
27.10	L+	30	40 x 24	1
27.16	L+	16	40 x 24	1
27.17	L+	14	36	1
27.47	L+	14	36	1
27.71	R+	28	36	1
27.92	L+	35	40 x 24	1
27.97	L+	37	120 x 12	1
27.98	L+	37	40 x 24	1
27.99	R+	32	40 x 24	1
27.99	L+	35	40 x 24	1
28.19	R+	38	40 x 24	1
28.83	L+	35	40 x 24	1
28.85	L+	32	40 x 24	2
			SUBTOTAL	44
			TOTAL	87

TEMPORARY FIBER ROLL

LOCATION	SIDE	TEMPORARY FIBER ROLL
PM	L+/R+	LF
MORRISON CREEK BRIDGE PM 16.85	L+/R+	120
STORAGE AREAS	L+/R+	180
SUBTOTAL		300

SUMMARY OF QUANTITIES
Q-10

STATE OF CALIFORNIA - DEPARTMENT OF TRANSPORTATION
Caltrans® DIVISION OF ENGINEERING

FUNCTIONAL SUPERVISOR: DEANN SPANGLER
CALCULATED-DESIGNED BY: BALJINDER BRAR
CHECKED BY: JAMES P LEE
REVISED BY
DATE REVISED

LAST REVISION 3-21-14
DATE PLOTTED => 10-JUN-2014
TIME PLOTTED => 10:17

M

Maint	MAINTENANCE
Max	MAXIMUM
MB	METAL BEAM
MBB	METAL BEAM BARRIER
MBGR	METAL BEAM GUARD RAILING
Med	MEDIAN
MGS	MIDWEST GUARDRAIL SYSTEM
MH	MANHOLE
Min	MINIMUM
Misc	MISCELLANEOUS
Misc I & S	MISCELLANEOUS IRON AND STEEL
Mkr	MARKER
Mod	MODIFIED,
	MODIFY
Mon	MONUMENT
MP	METAL PLATE
MPGR	METAL PLATE GUARD RAILING
MR	MOVEMENT RATING
MSE	MECHANICALLY STABILIZED EMBANKMENT
Mt	MOUNTAIN, MOUNT
Mtl	MATERIAL
MVP	MAINTENANCE VEHICLE PULLOUT

N

N	NORTH
NB	NORTHBOUND
No.	NUMBER (MUST HAVE PERIOD)
Nos.	NUMBERS (MUST HAVE PERIOD)
NPS	NOMINAL PIPE SIZE
NS	NEAR SIDE
NSP	NEW STANDARD PLAN
NTS	NOT TO SCALE

O

Oblr	OBLITERATE
OC	OVERCROSSING
OD	OUTSIDE DIAMETER
OF	OUTSIDE FACE
OG	ORIGINAL GROUND
OGAC	OPEN GRADED ASPHALT CONCRETE
OGFC	OPEN GRADED FRICTION COURSE
OH	OVERHEAD
OHWM	ORDINARY HIGH WATER MARK
O-O	OUT TO OUT
Opp	OPPOSITE
OSD	OVERSIDE DRAIN

P

p	PAGE
PAP	PERFORATED ALUMINUM PIPE
PB	PULL BOX
PC	POINT OF CURVATURE,
	PRECAST
PCC	POINT OF COMPOUND CURVE,
	PORTLAND CEMENT CONCRETE
PCMS	PORTABLE CHANGEABLE MESSAGE SIGN
PCP	PERFORATED CONCRETE PIPE,
	PRESTRESSED CONCRETE PIPE
PCVC	POINT OF COMPOUND VERTICAL CURVE
PEC	PERMIT TO ENTER AND CONSTRUCT
Ped	PEDESTRIAN
Ped OC	PEDESTRIAN OVERCROSSING
Ped UC	PEDESTRIAN UNDERCROSSING
Perm Mtl	PERMEABLE MATERIAL

P continued

PG	PROFILE GRADE
PI	POINT OF INTERSECTION
PJP	PARTIAL JOINT PENETRATION
Pkwy	PARKWAY
ℙ,PL	PLATE
P/L	PROPERTY LINE
PM	POST MILE,
	TIME FROM NOON TO MIDNIGHT
PN	PAVING NOTCH
POC	POINT OF HORIZONTAL CURVE
POT	POINT OF TANGENT
POVC	POINT OF VERTICAL CURVE
PP	PIPE PILE,
	PLASTIC PIPE,
	POWER POLE
PPL	PREFORMED PERMEABLE LINER
PPP	PERFORATED PLASTIC PIPE
PRC	POINT OF REVERSE CURVE
PRF	PAVEMENT REINFORCING FABRIC
PRVC	POINT OF REVERSE VERTICAL CURVE
PS&E	PLANS, SPECIFICATIONS AND ESTIMATES
PS, P/S	PRESTRESSED
PSP	PERFORATED STEEL PIPE
PT	POINT OF TANGENCY
PVC	POLYVINYL CHLORIDE
Pvmt	PAVEMENT

Q

Qty	QUANTITY

R

R	RADIUS
R & D	REMOVE AND DISPOSE
R & S	REMOVE AND SALVAGE
R/C	RATE OF CHANGE
RCA	REINFORCED CONCRETE ARCH
RCB	REINFORCED CONCRETE BOX
RCP	REINFORCED CONCRETE PIPE
RCPA	REINFORCED CONCRETE PIPE ARCH
Rd	ROAD
Reinf	REINFORCED,
	REINFORCEMENT,
	REINFORCING
Rel	RELOCATE
Repl	REPLACEMENT
Ret	RETAINING
Rev	REVISED, REVISION
Rdwy	ROADWAY
RHMA	RUBBERIZED HOT MIX ASPHALT
Riv	RIVER
RM	ROAD-MIXED
RP	RADIUS POINT,
	REFERENCE POINT
RR	RAILROAD
RSP	ROCK SLOPE PROTECTION,
	REVISED STANDARD PLAN
Rt	RIGHT
Rte	ROUTE
RW	REDWOOD,
	RETAINING WALL
R/W	RIGHT OF WAY
Rwy	RAILWAY

S

S	SOUTH,
	SUPPLEMENT
SAE	STRUCTURE APPROACH EMBANKMENT
Salv	SALVAGE
SAPP	STRUCTURAL ALUMINUM PLATE PIPE
SB	SOUTHBOUND
SC	SAND CUSHION
SCSP	SLOTTED CORRUGATED STEEL PIPE
SD	STORM DRAIN
Sec	SECOND,
	SECTION
Sep	SEPARATION
SG	SUBGRADE
Shld	SHOULDER
Sht	SHEET
Sim	SIMILAR
℄	STATION LINE
SM	SELECTED MATERIAL
Spec	SPECIAL,
	SPECIFICATIONS
SPP	SLOTTED PLASTIC PIPE
SS	SLOPE STAKE
SSBM	STRAP AND SADDLE BRACKET METHOD
SSD	STRUCTURAL SECTION DRAIN
SSPA	STRUCTURAL STEEL PLATE ARCH
SSPP	STRUCTURAL STEEL PLATE PIPE
SSPPA	STRUCTURAL STEEL PLATE PIPE ARCH
SSRP	STEEL SPIRAL RIB PIPE
St	STREET
Sta	STATION
STBB	SINGLE THRIE BEAM BARRIER
Std	STANDARD
Str	STRUCTURE
Surf	SURFACING
SW	SIDEWALK,
	SOUND WALL
Swr	SEWER
Sym	SYMMETRICAL
S4S	SURFACE 4 SIDES

T

T	SEMI-TANGENT
Tan	TANGENT
TBB	THRIE BEAM BARRIER
Tbr	TIMBER
TC	TOP OF CURB
TCB	TRAFFIC CONTROL BOX
TCE	TEMPORARY CONSTRUCTION EASEMENT
Tel	TELEPHONE
Temp	TEMPORARY
TG	TOP OF GRADE
Tot	TOTAL
TP	TELEPHONE POLE
TPB	TREATED PERMEABLE BASE
TPM	TREATED PERMEABLE MATERIAL
Trans	TRANSITION

T continued

TS	TRANSVERSE,
	TRAFFIC SIGNAL,
	TUBULAR STEEL
Typ	TYPICAL

U

UC	UNDERCROSSING
UD	UNDERDRAIN
UG	UNDERGROUND
UON	UNLESS OTHERWISE NOTED
UP	UNDERPASS

V

V	VALVE,
	DESIGN SPEED
Var	VARIABLE,
	VARIES
VC	VERTICAL CURVE
VCP	VITRIFIED CLAY PIPE
Vert	VERTICAL
Via	VIADUCT
Vol	VOLUME

W

W	WEST,
	WIDTH
WB	WESTBOUND
WH	WEEP HOLE
WM	WIRE MESH
WS	WATER SURFACE
WSP	WELDED STEEL PIPE
Wt	WEIGHT
WV	WATER VALVE
WW	WINGWALL
WWLOL	WINGWALL LAYOUT LINE

X

X Sec	CROSS SECTION
Xing	CROSSING

Y

Yr	YEAR
Yrs	YEARS

Dist	COUNTY	ROUTE	POST MILES TOTAL PROJECT	SHEET No.	TOTAL SHEETS
01	Lak	20	13.5/31.4	41	73

Grace M. Tsushima
REGISTERED CIVIL ENGINEER

July 19, 2013
PLANS APPROVAL DATE

REGISTERED PROFESSIONAL ENGINEER
Grace M. Tsushima
No. C49814
Exp. 9-30-14
CIVIL
STATE OF CALIFORNIA

THE STATE OF CALIFORNIA OR ITS OFFICERS OR AGENTS SHALL NOT BE RESPONSIBLE FOR THE ACCURACY OR COMPLETENESS OF SCANNED COPIES OF THIS PLAN SHEET.

TO ACCOMPANY PLANS DATED 5-27-14

UNIT OF MEASUREMENT SYMBOLS:

Some of the symbols used in the project plan quantity tables and in the Bid Item List are:

TABLE A

SYMBOL USED	DEFINITIONS
ACRE	ACRE
CF	CUBIC FOOT
CY	CUBIC YARD
EA	EACH
GAL	GALLON
LB	POUND
LF	LINEAR FOOT
SQFT	SQUARE FOOT
SQYD	SQUARE YARD
STA	100 FEET
TAB	TABLET
TON	2,000 POUNDS

Some of the symbols used in the plans other than in the project plan quantity tables are:

TABLE B

SYMBOL USED	DEFINITIONS
ksi	KIPS PER SQUARE INCH
ksf	KIPS PER SQUARE FOOT
psi	POUNDS PER SQUARE INCH
psf	POUNDS PER SQUARE FOOT
lb/ft^3, pcf	POUNDS PER CUBIC FOOT
tsf	TONS PER SQUARE FOOT
mph, MPH *	MILES PER HOUR
ø	NOMINAL DIAMETER
oz	OUNCE
lb	POUND
kip	1,000 POUNDS
cal	CALORIE
ft	FOOT OR FEET
gal	GALLON

* For use on a sign panel only

STATE OF CALIFORNIA
DEPARTMENT OF TRANSPORTATION

ABBREVIATIONS (SHEET 2 OF 2)

NO SCALE

RSP A10B DATED JULY 19, 2013 SUPERSEDES STANDARD PLAN A10B DATED MAY 20, 2011 - PAGE 2 OF THE STANDARD PLANS BOOK DATED 2010.

REVISED STANDARD PLAN RSP A10B

2010 REVISED STANDARD PLAN RSP A10B

6-7-13

Dist	COUNTY	ROUTE	POST MILES TOTAL PROJECT	SHEET No.	TOTAL SHEETS
01	Lak	20	13.5/31.4	42	73

REGISTERED CIVIL ENGINEER

July 19, 2013
PLANS APPROVAL DATE

REGISTERED PROFESSIONAL ENGINEER Roberta L. McLaughlin No. C40375 Exp. 3-31-15 CIVIL STATE OF CALIFORNIA

THE STATE OF CALIFORNIA OR ITS OFFICERS OR AGENTS SHALL NOT BE RESPONSIBLE FOR THE ACCURACY OR COMPLETENESS OF SCANNED COPIES OF THIS PLAN SHEET.

TO ACCOMPANY PLANS DATED 5-27-14

2010 REVISED STANDARD PLAN RSP A20C

EXIT RAMP NEUTRAL AREA (GORE) TREATMENT

DETAIL 36

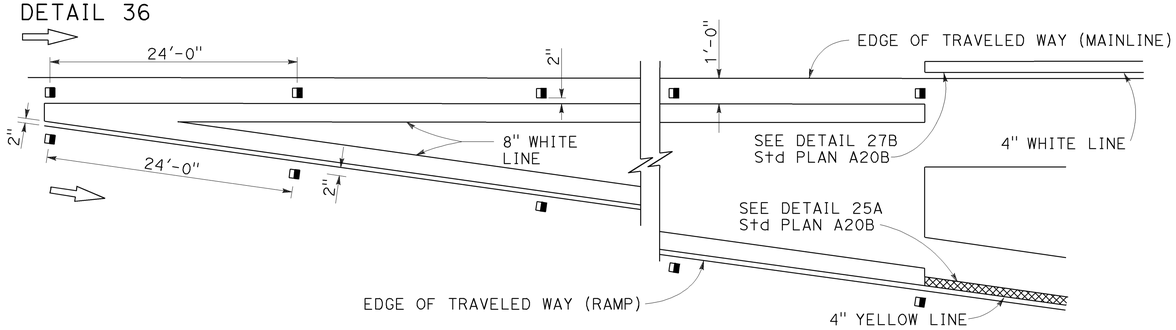

ENTRANCE RAMP NEUTRAL AREA (MERGE) TREATMENT

DETAIL 36A

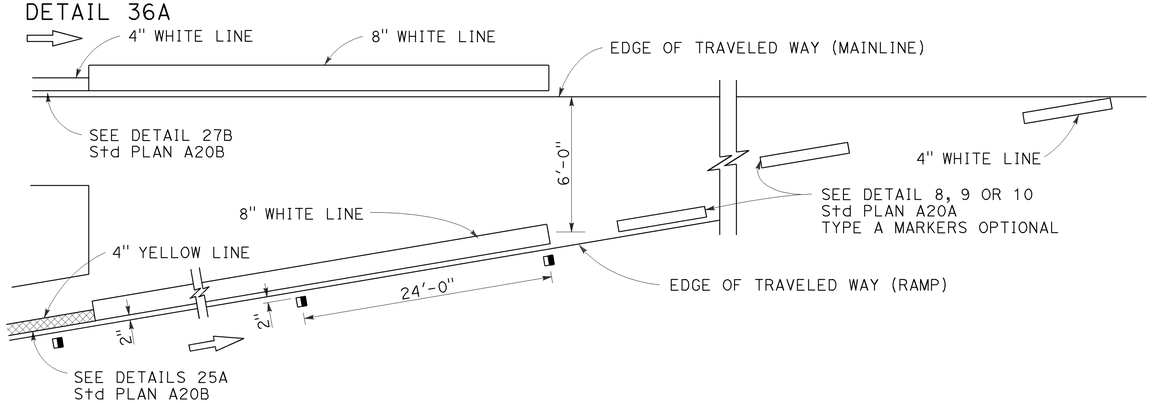

ENTRANCE RAMP NEUTRAL AREA (ACCELERATION LANE) TREATMENT

DETAIL 36B

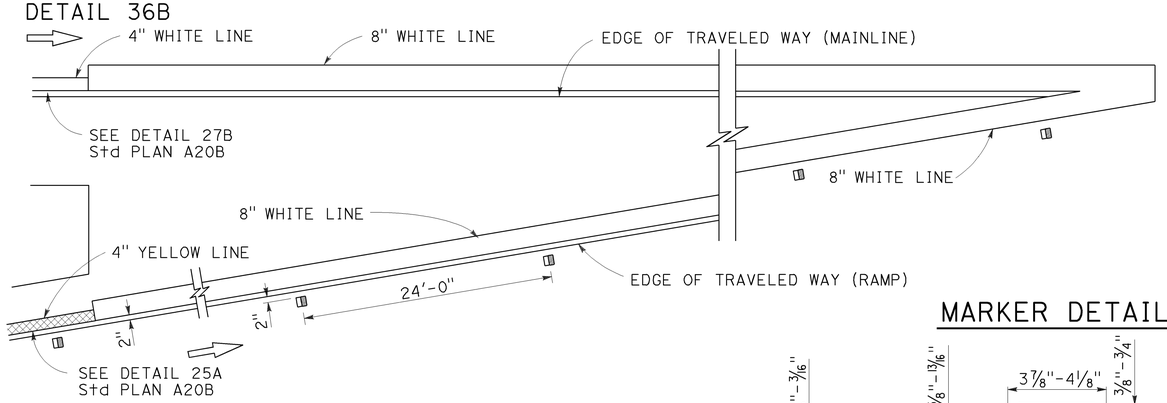

LANE DROP AT EXIT RAMPS

DETAIL 37

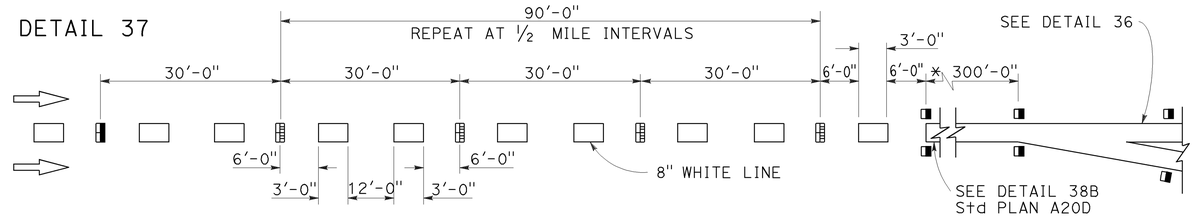

DETAIL 37A

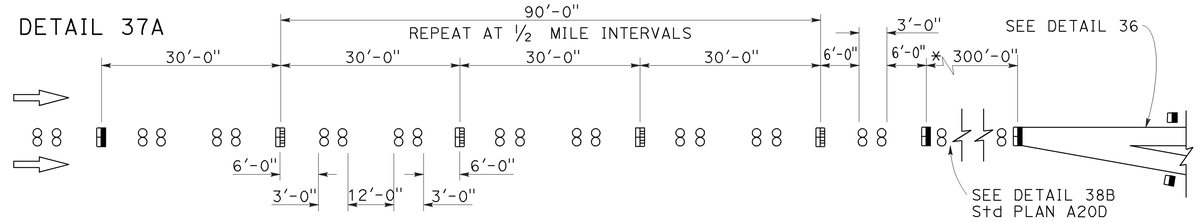

* The solid channelizing line shown may be omitted on short auxiliary lanes where weaving length is critical.

LANE DROP AT INTERSECTIONS

DETAIL 37B

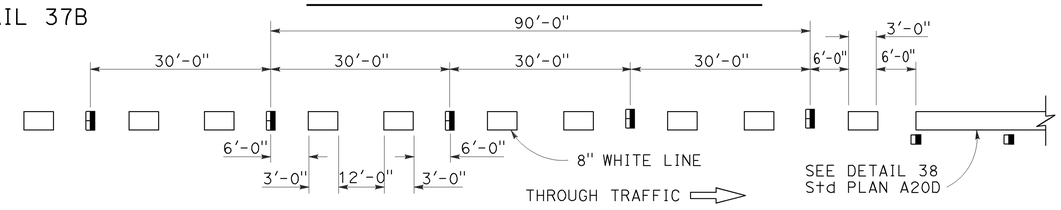

DETAIL 37C

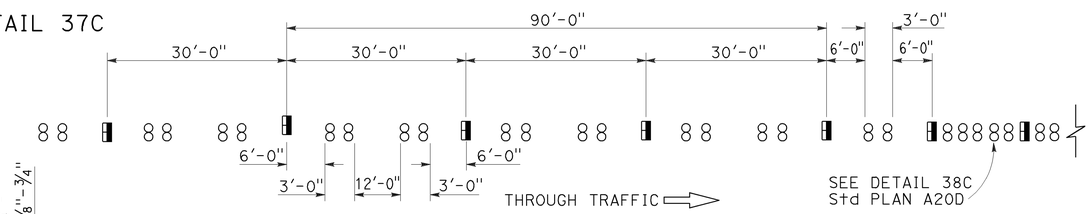

MARKER DETAILS

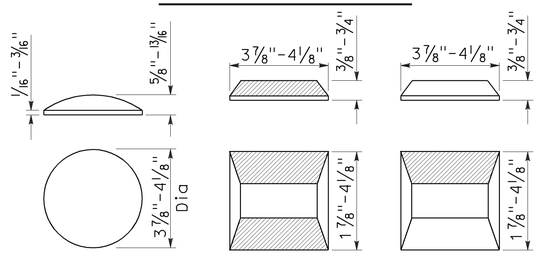

RETROREFLECTIVE FACE

LEGEND:

MARKERS

- ○ TYPE A WHITE NON-REFLECTIVE
- ⊟ TYPE C RED-CLEAR RETROREFLECTIVE
- ◨ TYPE G ONE-WAY CLEAR RETROREFLECTIVE

STATE OF CALIFORNIA
DEPARTMENT OF TRANSPORTATION

PAVEMENT MARKERS AND TRAFFIC LINE TYPICAL DETAILS

NO SCALE

RSP A20C DATED JULY 19, 2013 SUPERSEDES STANDARD PLAN A20C DATED MAY 20, 2011 - PAGE 11 OF THE STANDARD PLANS BOOK DATED 2010.

REVISED STANDARD PLAN RSP A20C

4-29-13

Dist	COUNTY	ROUTE	POST MILES TOTAL PROJECT	SHEET No.	TOTAL SHEETS
01	Lak	20	13.5/31.4	43	73

Roberta L. McLaughlin
REGISTERED CIVIL ENGINEER

April 20, 2012
PLANS APPROVAL DATE

REGISTERED PROFESSIONAL ENGINEER
Roberta L. McLaughlin
No. C40375
Exp. 3-31-13
CIVIL
STATE OF CALIFORNIA

THE STATE OF CALIFORNIA OR ITS OFFICERS OR AGENTS SHALL NOT BE RESPONSIBLE FOR THE ACCURACY OR COMPLETENESS OF SCANNED COPIES OF THIS PLAN SHEET.

TO ACCOMPANY PLANS DATED 5-27-14

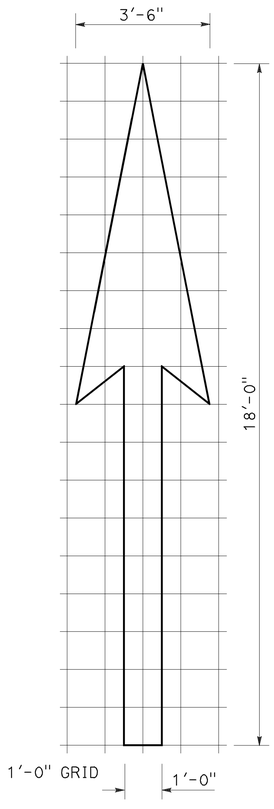

A=25 ft^2

TYPE I 18'-0" ARROW

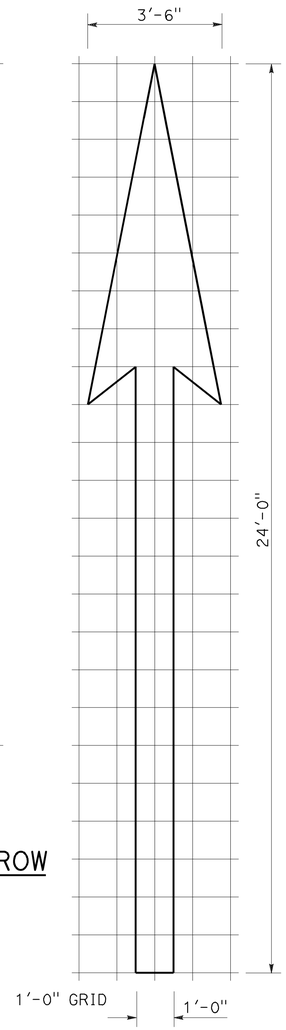

A=31 ft^2

TYPE I 24'-0" ARROW

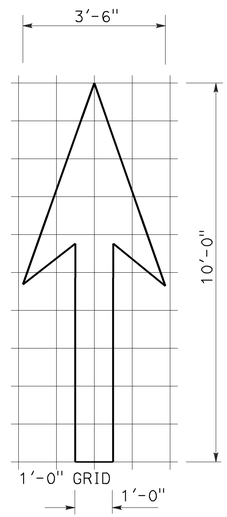

A=14 ft^2

TYPE I 10'-0" ARROW

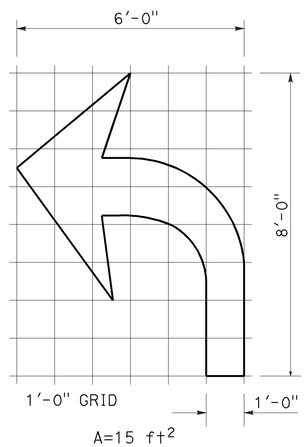

A=15 ft^2

TYPE IV (L) ARROW

(For Type IV (R) arrow, use mirror image)

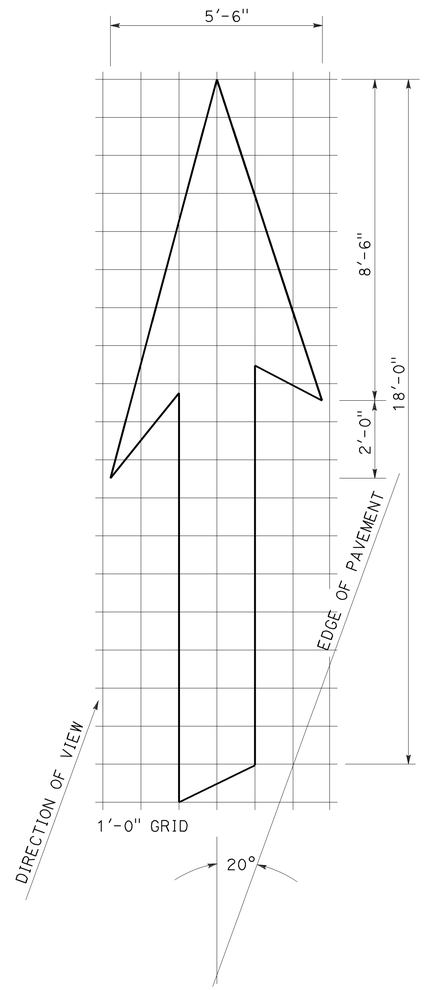

A=42 ft^2

TYPE VI ARROW

Right lane drop arrow
(For left lane, use mirror image)

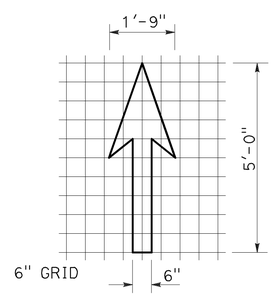

A=3.5 ft^2

BIKE LANE ARROW

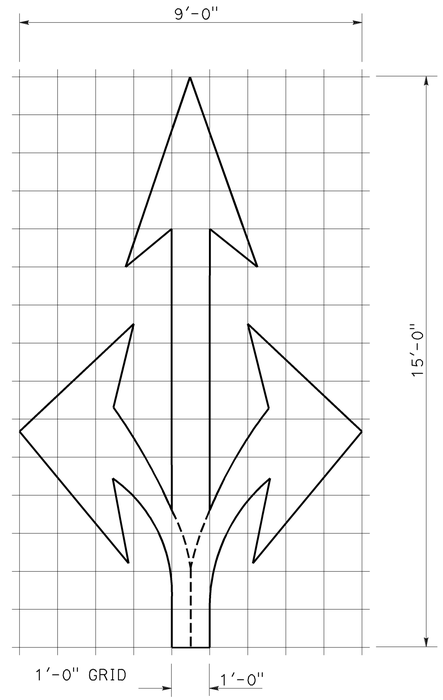

A=36 ft^2

TYPE VIII ARROW

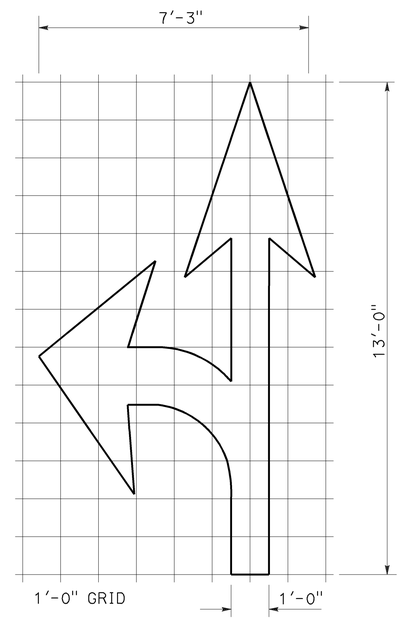

A=27 ft^2

TYPE VII (L) ARROW

(For Type VII (R) arrow, use mirror image)

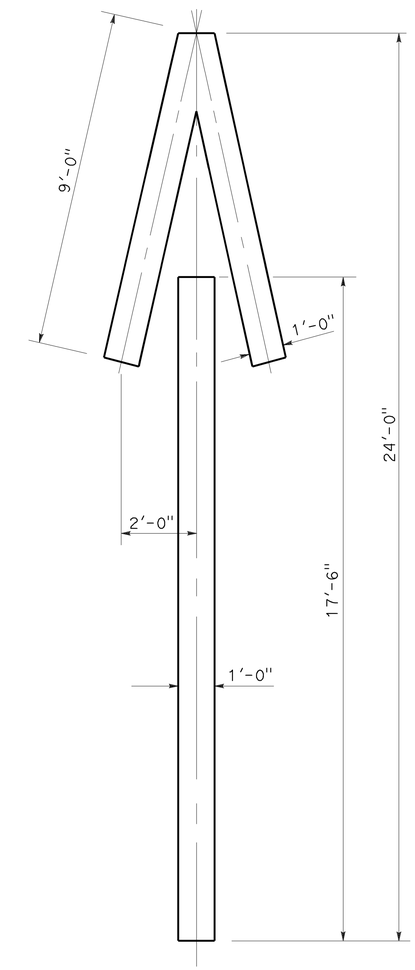

A=33 ft^2

TYPE V ARROW

NOTE:
Minor variations in dimensions may be accepted by the Engineer.

STATE OF CALIFORNIA
DEPARTMENT OF TRANSPORTATION

PAVEMENT MARKINGS ARROWS

NO SCALE

RSP A24A DATED APRIL 20, 2012 SUPERSEDES STANDARD PLAN A24A DATED MAY 20, 2011 - PAGE 13 OF THE STANDARD PLANS BOOK DATED 2010.

REVISED STANDARD PLAN RSP A24A

2010 REVISED STANDARD PLAN RSP A24A

3-14-12

Dist	COUNTY	ROUTE	POST MILES TOTAL PROJECT	SHEET No.	TOTAL SHEETS
01	Lak	20	13.5/31.4	44	73

REGISTERED CIVIL ENGINEER

October 19, 2012
PLANS APPROVAL DATE

REGISTERED PROFESSIONAL ENGINEER
Roberta L. McLaughlin
No. C40375
Exp. 3-31-13
CIVIL
STATE OF CALIFORNIA

THE STATE OF CALIFORNIA OR ITS OFFICERS OR AGENTS SHALL NOT BE RESPONSIBLE FOR THE ACCURACY OR COMPLETENESS OF SCANNED COPIES OF THIS PLAN SHEET.

NOTE: TO ACCOMPANY PLANS DATED 5-27-14

Minor variations in dimensions may be accepted by the Engineer.

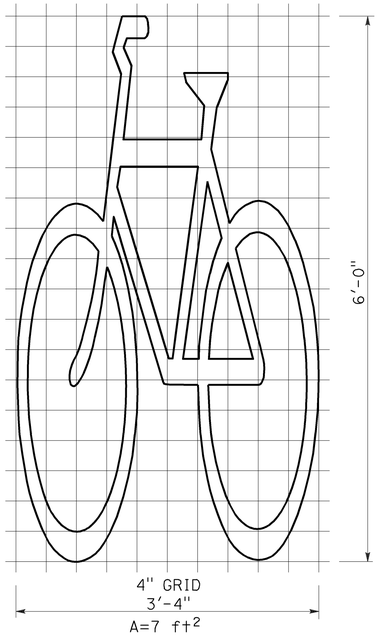

BIKE LANE SYMBOL WITHOUT PERSON

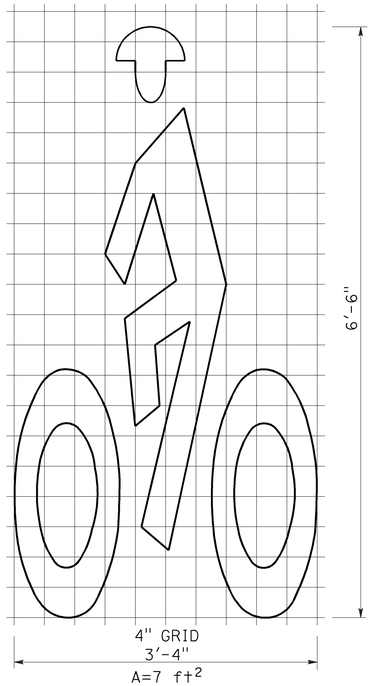

BIKE LANE SYMBOL WITH PERSON

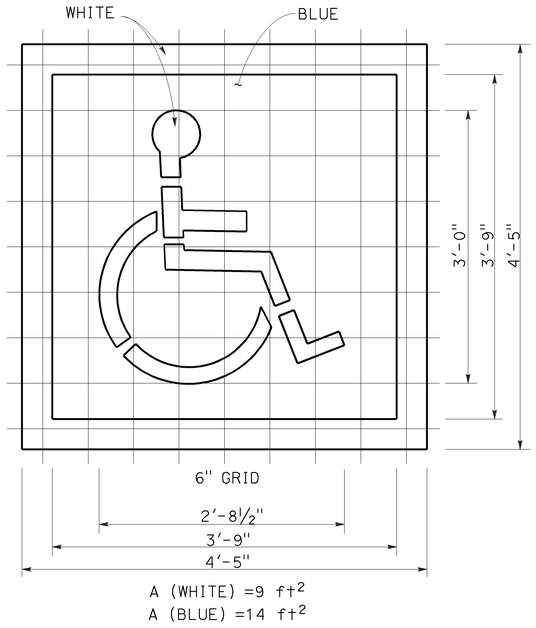

INTERNATIONAL SYMBOL OF ACCESSIBILITY (ISA) MARKING

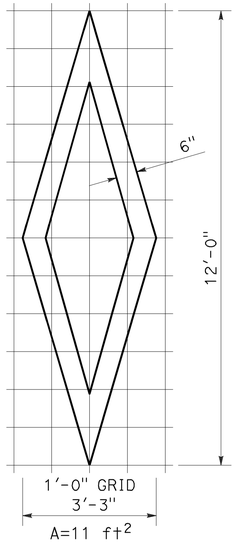

DIAMOND SYMBOL

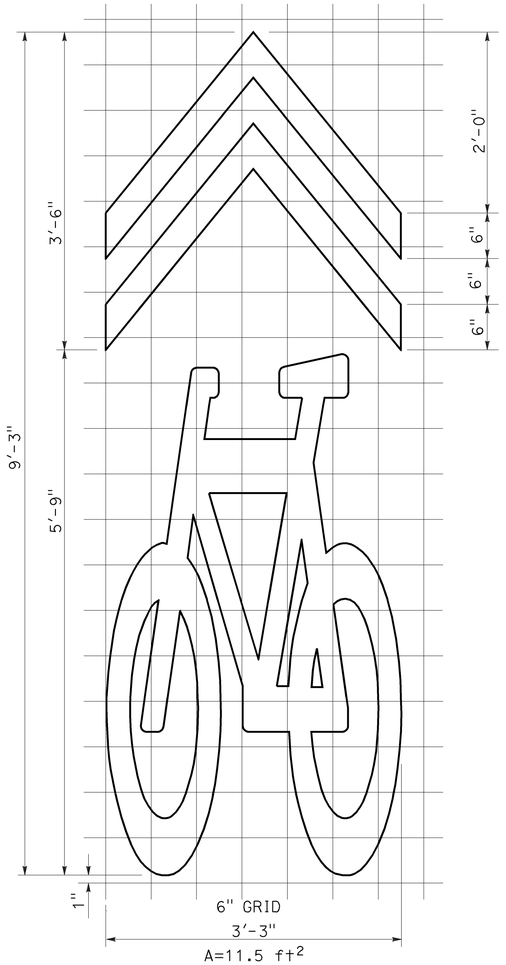

SHARED ROADWAY BICYCLE MARKING

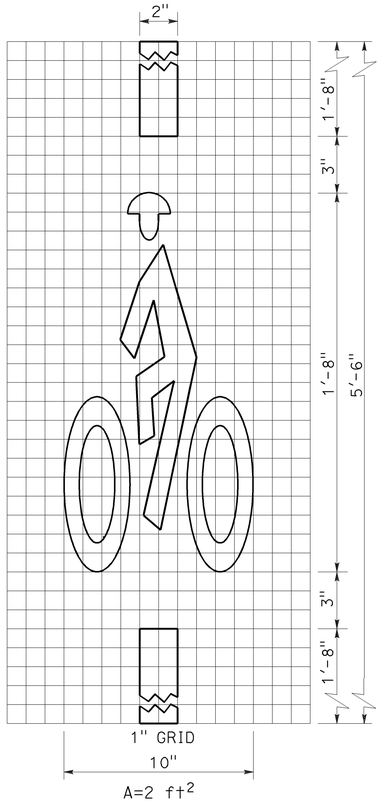

BICYCLE LOOP DETECTOR SYMBOL

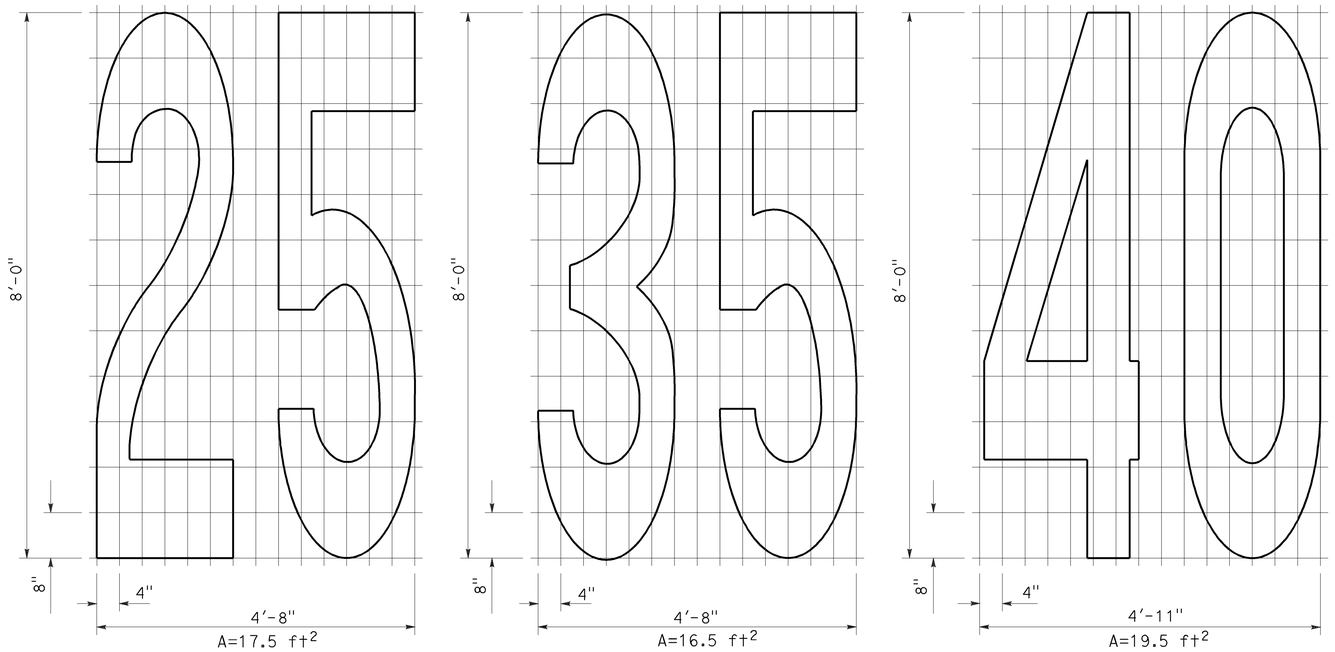

NUMERALS

STATE OF CALIFORNIA
DEPARTMENT OF TRANSPORTATION

PAVEMENT MARKINGS SYMBOLS AND NUMERALS

NO SCALE

RSP A24C DATED OCTOBER 19, 2012 SUPERSEDES STANDARD PLAN A24C DATED MAY 20, 2011 - PAGE 15 OF THE STANDARD PLANS BOOK DATED 2010.

REVISED STANDARD PLAN RSP A24C

2010 REVISED STANDARD PLAN RSP A24C

6-28-12

Dist	COUNTY	ROUTE	POST MILES TOTAL PROJECT	SHEET No.	TOTAL SHEETS
01	Lak	20	13.5/31.4	45	73

REGISTERED CIVIL ENGINEER

July 20, 2012
PLANS APPROVAL DATE

REGISTERED PROFESSIONAL ENGINEER
Roberta L. McLaughlin
No. C40375
Exp. 3-31-13
CIVIL
STATE OF CALIFORNIA

THE STATE OF CALIFORNIA OR ITS OFFICERS OR AGENTS SHALL NOT BE RESPONSIBLE FOR THE ACCURACY OR COMPLETENESS OF SCANNED COPIES OF THIS PLAN SHEET.

TO ACCOMPANY PLANS DATED 5-27-14

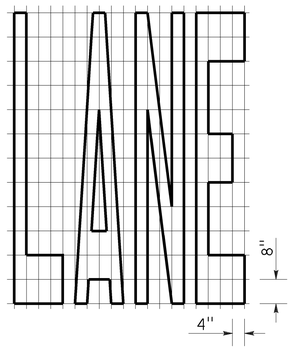

A=24 ft^2

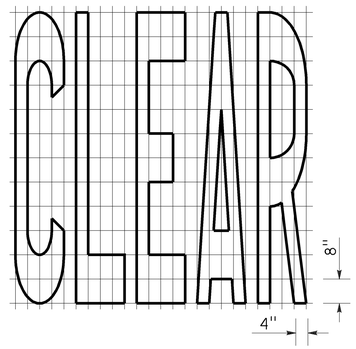

A=27 ft^2

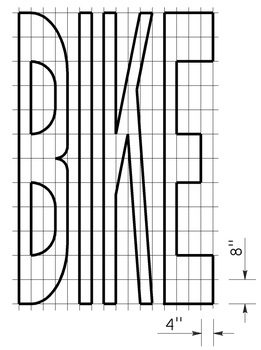

A=21 ft^2

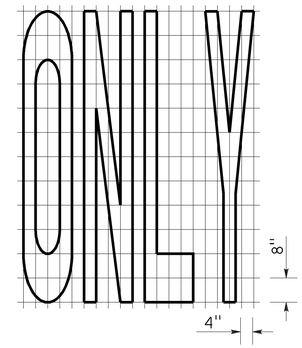

A=22 ft^2

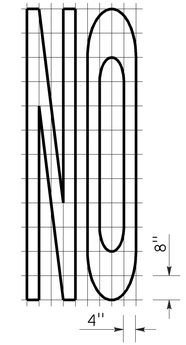

A=14 ft^2

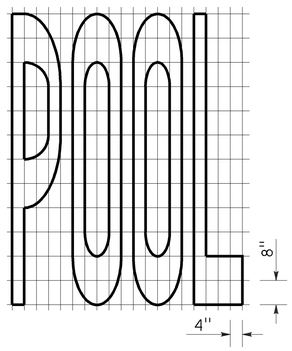

A=23 ft^2

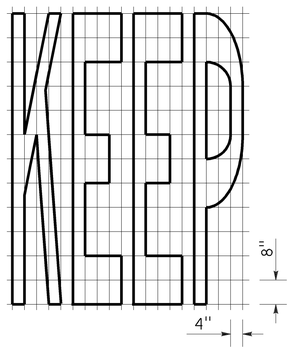

A=24 ft^2

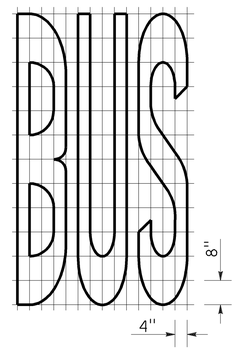

A=20 ft^2

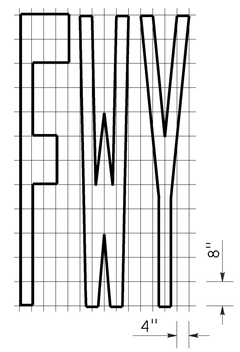

A=16 ft^2

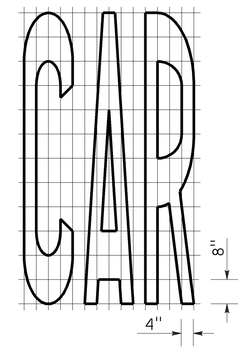

A=17 ft^2

WORD MARKINGS			
ITEM	ft^2	ITEM	ft^2
LANE	24	NO	14
POOL	23	BIKE	21
CAR	17	BUS	20
CLEAR	27	ONLY	22
KEEP	24	FWY	16

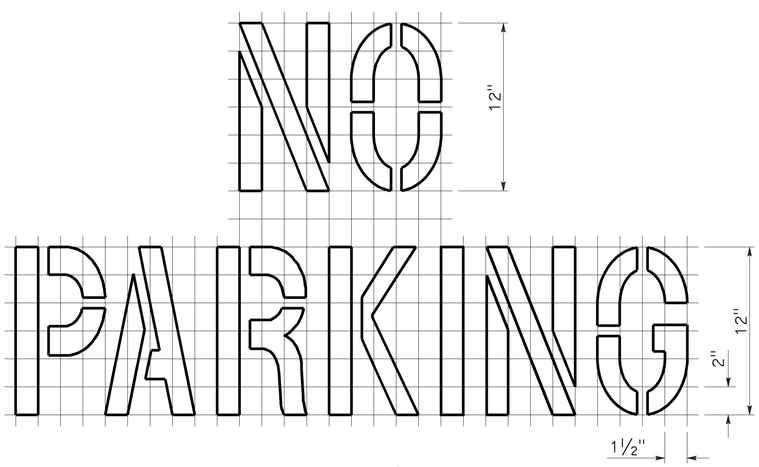

A=2 ft^2
See Notes 6 and 7

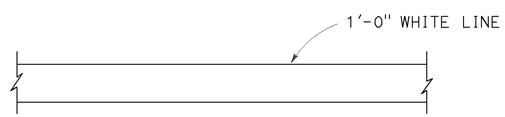

LIMIT LINE (STOP LINE)

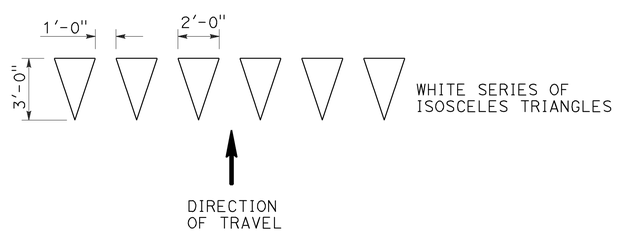

YIELD LINE

NOTES:

1. If a message consists of more than one word, it should read "UP", i.e., the first word should be nearest the driver.
2. The space between words should be at least four times the height of the characters for low speed roads, but not more than ten times the height of the characters. The space may be reduced appropriately where there is limited space because of local conditions.
3. Minor variations in dimensions may be accepted by the Engineer.
4. Portions of a letter, number or symbol may be separated by connecting segments not to exceed 2" in width.
5. The words "NO PARKING" pavement marking is to be used for parking facilities. For typical locations of markings, see Standard Plans A90A and A90B.
6. The words "NO PARKING", shall be painted in white letters no less than 1'-0" high on a contrasting background and located so that it is visible to traffic enforcement officials.

STATE OF CALIFORNIA
DEPARTMENT OF TRANSPORTATION

PAVEMENT MARKINGS WORDS, LIMIT AND YIELD LINES

NO SCALE

RSP A24E DATED JULY 20, 2012 SUPERSEDES STANDARD PLAN A24E
DATED MAY 20, 2011 - PAGE 17 OF THE STANDARD PLANS BOOK DATED 2010.

REVISED STANDARD PLAN RSP A24E

2010 REVISED STANDARD PLAN RSP A24E

6-12-12

Dist	COUNTY	ROUTE	POST MILES TOTAL PROJECT	SHEET No.	TOTAL SHEETS
01	Lak	20	13.5/31.4	46	73

Roberta L. McLaughlin
REGISTERED CIVIL ENGINEER

July 20, 2012
PLANS APPROVAL DATE

REGISTERED PROFESSIONAL ENGINEER
Roberta L. McLaughlin
No. C40375
Exp. 3-31-13
CIVIL
STATE OF CALIFORNIA

THE STATE OF CALIFORNIA OR ITS OFFICERS OR AGENTS SHALL NOT BE RESPONSIBLE FOR THE ACCURACY OR COMPLETENESS OF SCANNED COPIES OF THIS PLAN SHEET.

TO ACCOMPANY PLANS DATED 5-27-14

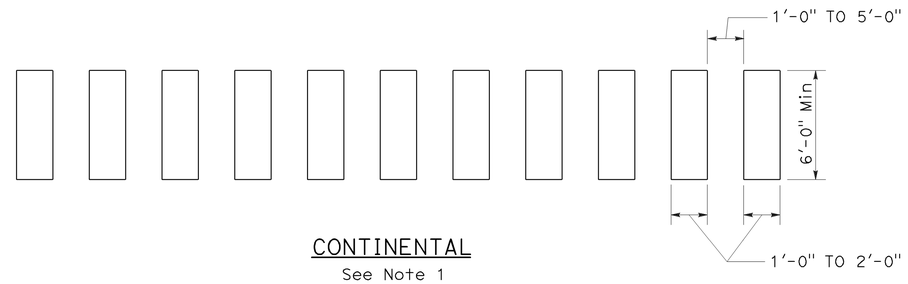

CONTINENTAL
See Note 1

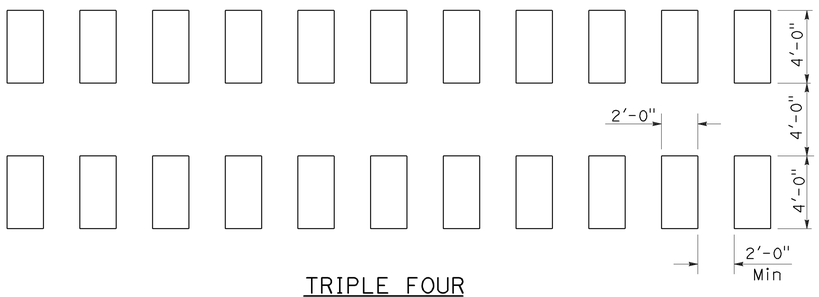

TRIPLE FOUR
See Note 1

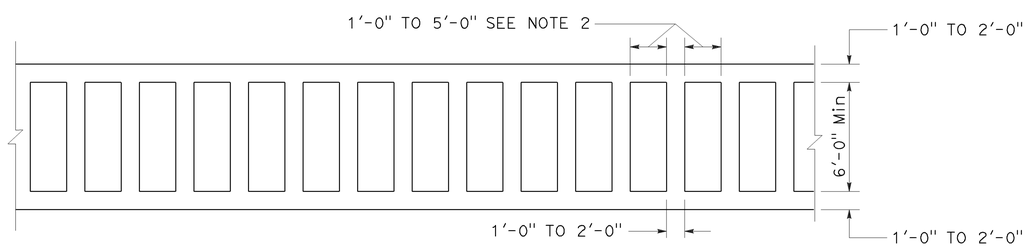

LADDER

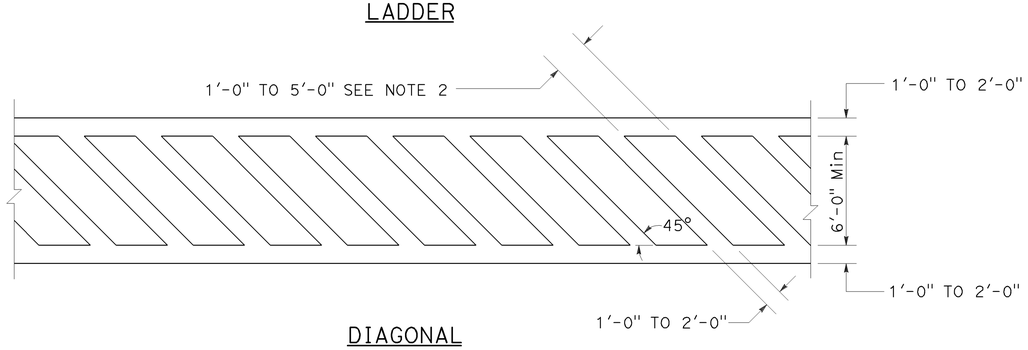

DIAGONAL

HIGHER VISIBILITY CROSSWALKS

NOTES:

1. Spaces between markings should be placed in wheel tracks of each lane.
2. Spacings not to exceed 2.5 times width of longitudinal line.
3. All crosswalk markings must be white except for those near schools must be yellow.

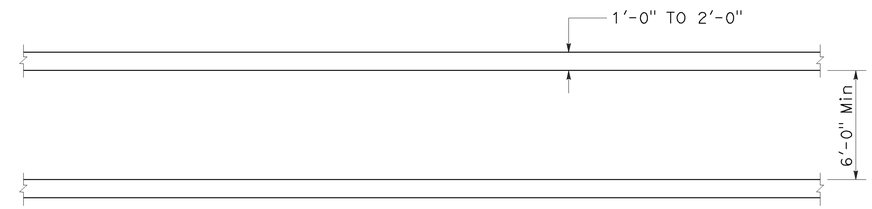

BASIC

STATE OF CALIFORNIA
DEPARTMENT OF TRANSPORTATION

PAVEMENT MARKINGS CROSSWALKS

NO SCALE

RSP A24F DATED JULY 20, 2012 SUPPLEMENTS THE STANDARD PLANS BOOK DATED 2010.

REVISED STANDARD PLAN RSP A24F

2010 REVISED STANDARD PLAN RSP A24F

6-28-12

Dist	COUNTY	ROUTE	POST MILES TOTAL PROJECT	SHEET No.	TOTAL SHEETS
01	Lak	20	13.5/31.4	47	73

Randell D. Hiatt
REGISTERED CIVIL ENGINEER

July 19, 2013
PLANS APPROVAL DATE

REGISTERED PROFESSIONAL ENGINEER
Randell D. Hiatt
No. C50200
Exp. 6-30-15
CIVIL
STATE OF CALIFORNIA

THE STATE OF CALIFORNIA OR ITS OFFICERS OR AGENTS SHALL NOT BE RESPONSIBLE FOR THE ACCURACY OR COMPLETENESS OF SCANNED COPIES OF THIS PLAN SHEET.

TO ACCOMPANY PLANS DATED 5-27-14

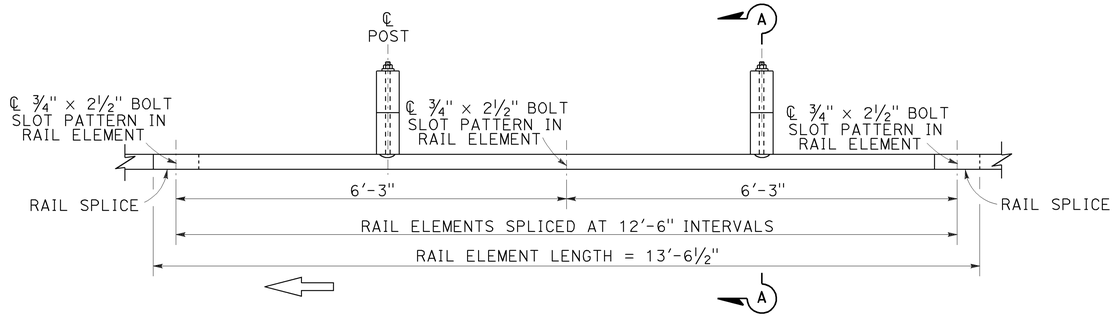

PLAN

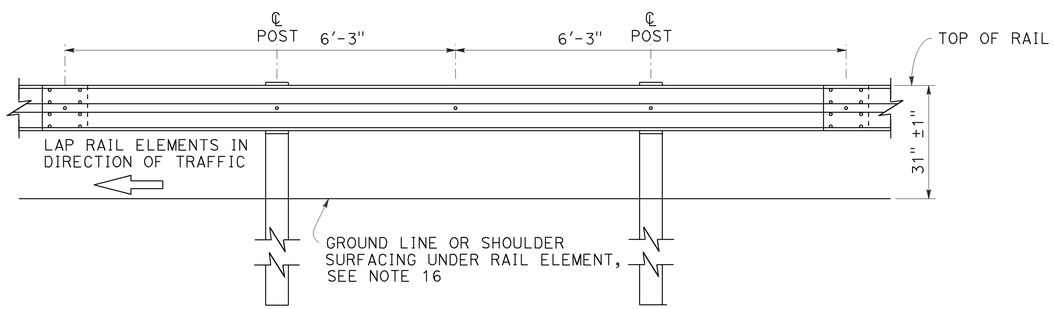

ELEVATION

MIDWEST GUARDRAIL SYSTEM WITH WOOD POST AND BLOCKS

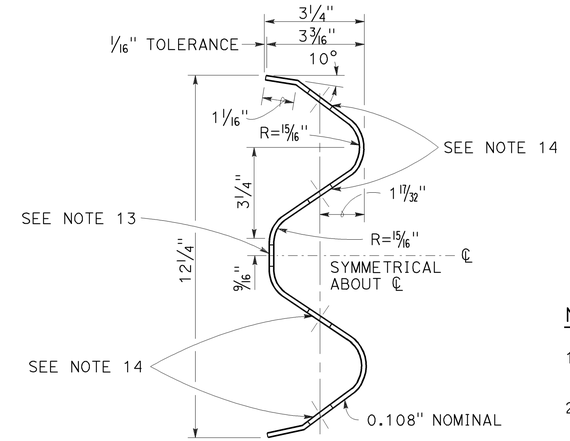

SECTION THRU RAIL ELEMENT

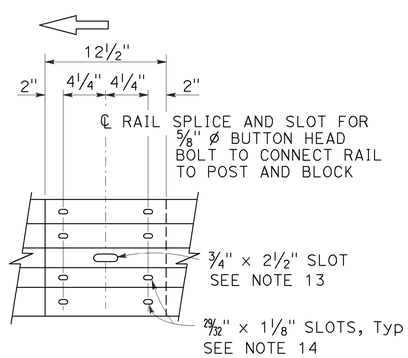

ELEVATION

RAIL ELEMENT SPLICE DETAIL

a) Connect the over lapped end of the rail elements with ⅝" ø × 1⅜" button head oval shoulder splice bolts inserted into the 29⁄32" × 1⅛" slots and bolted together with ⅝" ø recessed hex nuts. Recess of hex nut points toward rail element. A total of 8 bolts and nuts are to be used at each rail splice connection.

b) The ends of the rail elements are to be overlapped in the direction of traffic (see details).

c) Where end cap is to be attached to the end of a rail element, a total of 4 of the above described splice bolts and nuts are to be used.

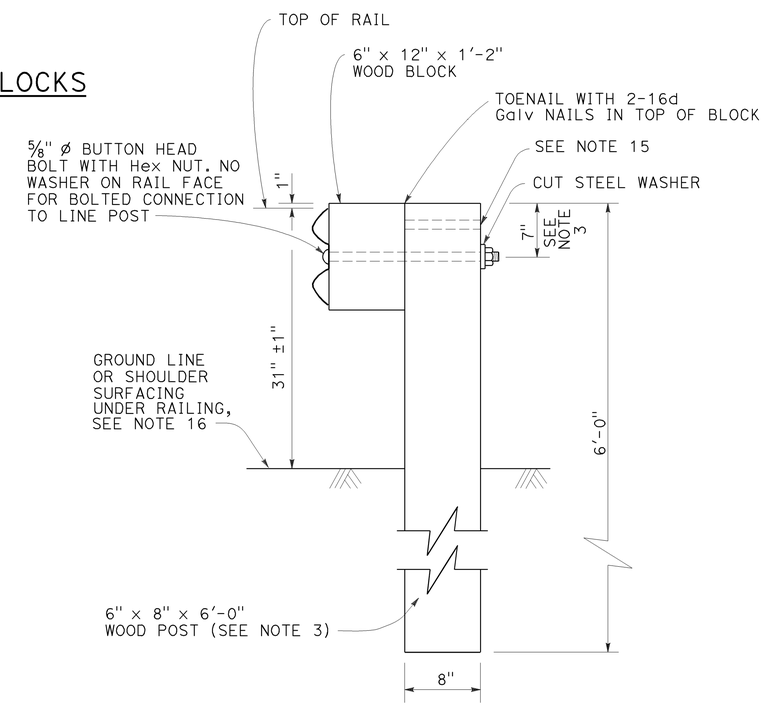

SECTION A-A

TYPICAL WOOD LINE POST INSTALLATION

See Note 4

NOTES:

1. For details of steel post installations, see Revised Standard Plan RSP A77L2.
2. For details of standard hardware used to construct MGS, see Revised Standard Plan RSP A77M1.
3. For details of wood posts and wood blocks used to construct MGS, see Revised Standard Plan RSP A77N1.
4. For additional installation details, see Revised Standard Plan RSP A77N3.
5. MGS post spacing to be 6'-3" center to center, except as otherwise noted.
6. For MGS typical layouts, see the A77P, A77Q and A77R Series of Standard Plans.
7. If railing is connected to terminal system end treatment, use 31" height terminal system end treatment.
8. For MGS end anchor details, see Revised Standard Plans RSP A77S1 and RSP A77T2.
9. For details of MGS transition to bridge railing, see Revised Standard Plan RSP A77U4.
10. For additional details of MSG connection to bridge railing, see Revised Standard Plans RSP A77U1, RSP A77U2 and RSP A77V1.
11. For MGS connection details to abutments and walls, see Revised Standard Plan RSP A77U3.
12. For typical MGS delineation and dike positioning details, see Revised Standard Plan RSP A77N4.
13. Slotted hole for bolted connection of rail element to block and post. See "Section Thru Rail Element".
14. Slotted holes for splice bolts to overlap ends of rail element. See "Section Thru Rail Element".
15. Additional hole in uppermost portion of line post is for potential future adjustments of railing height. See Revised Standard Plan RSP A77N1.
16. Install posts in soil.

STATE OF CALIFORNIA
DEPARTMENT OF TRANSPORTATION

MIDWEST GUARDRAIL SYSTEM STANDARD RAILING SECTION (WOOD POST WITH WOOD BLOCK)

NO SCALE

RSP A77L1 DATED JULY 19, 2013 SUPPLEMENTS STANDARD PLANS BOOK DATED 2010.

REVISED STANDARD PLAN RSP A77L1

2010 REVISED STANDARD PLAN RSP A77L1

7-3-13

Dist	COUNTY	ROUTE	POST MILES TOTAL PROJECT	SHEET No.	TOTAL SHEETS
01	Lak	20	13.5/31.4	48	73

Randell D. Hiatt
REGISTERED CIVIL ENGINEER

July 19, 2013
PLANS APPROVAL DATE

REGISTERED PROFESSIONAL ENGINEER
Randell D. Hiatt
No. C50200
Exp. 6-30-15
CIVIL
STATE OF CALIFORNIA

THE STATE OF CALIFORNIA OR ITS OFFICERS OR AGENTS SHALL NOT BE RESPONSIBLE FOR THE ACCURACY OR COMPLETENESS OF SCANNED COPIES OF THIS PLAN SHEET.

TO ACCOMPANY PLANS DATED 5-27-14

2010 REVISED STANDARD PLAN RSP A77L3

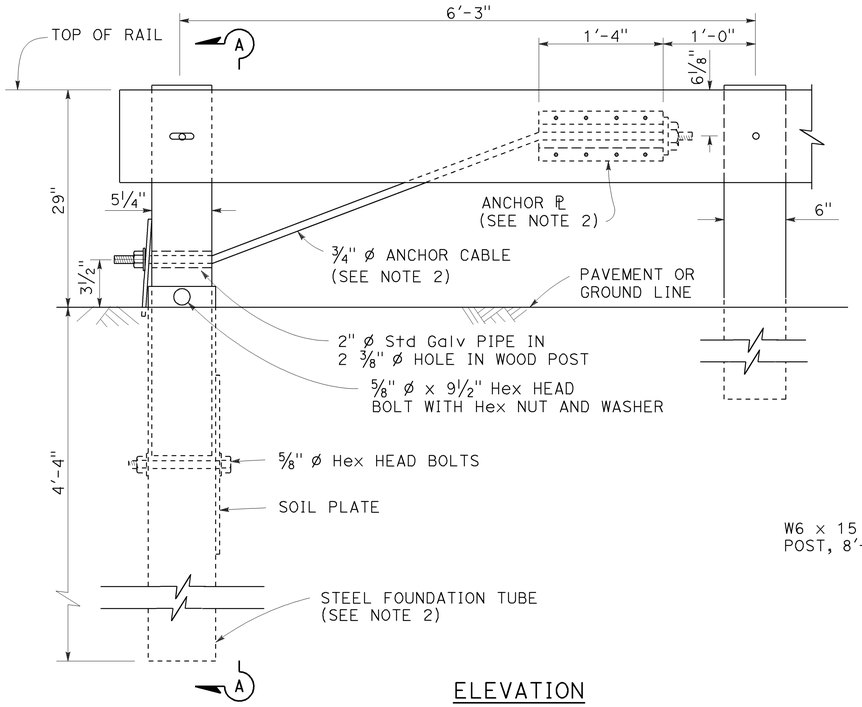

ELEVATION
END ANCHOR
ASSEMBLY (TYPE SFT)

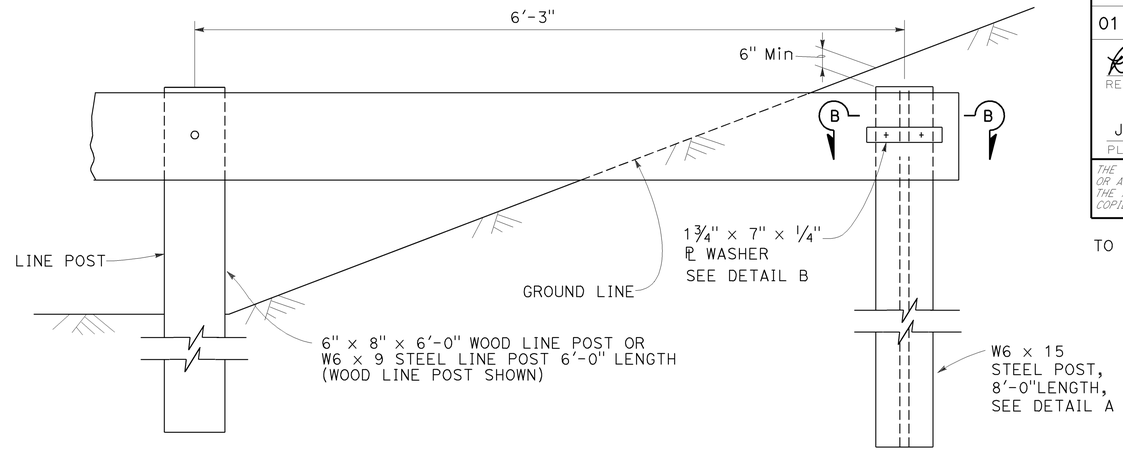

BURIED POST END ANCHOR

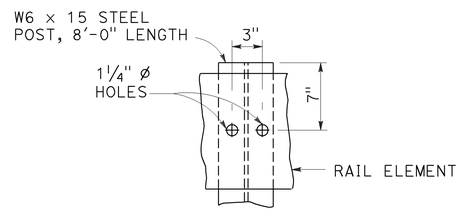

DETAIL A

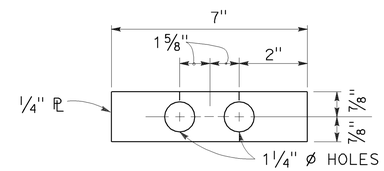

DETAIL B

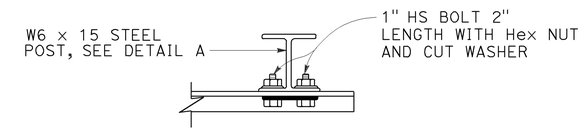

SECTION B-B

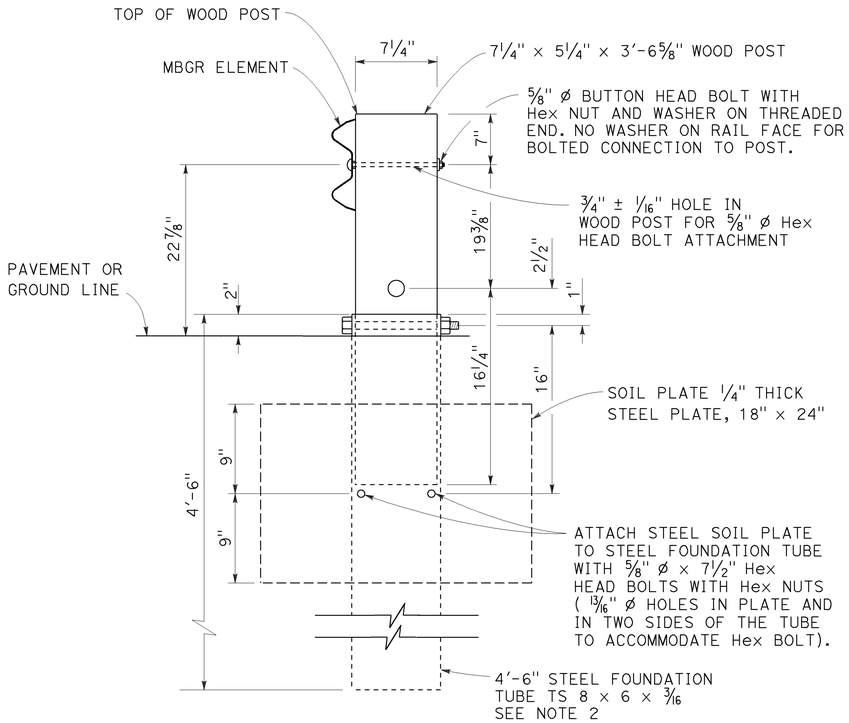

SECTION A-A

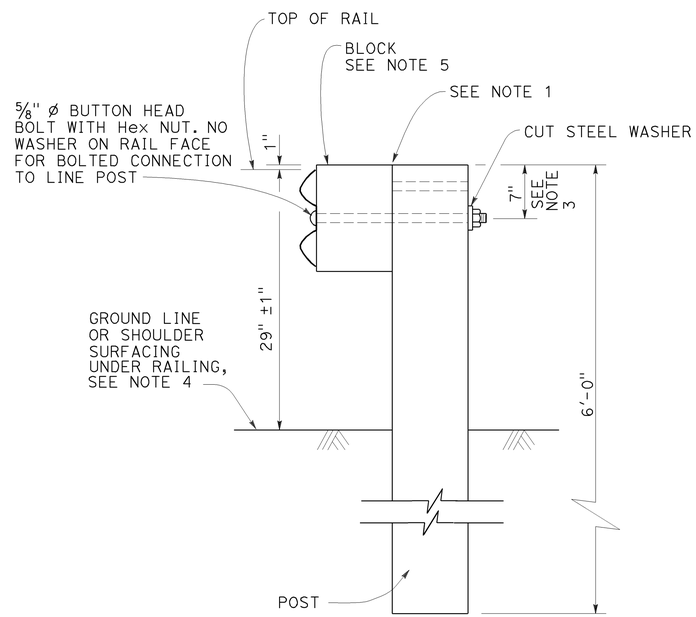

TYPICAL LINE
POST INSTALLATION

NOTES:

1. For wood post and wood block, toenail with 2-16d Galv nails in top of block. For steel post and notched wood or plastic block, notched face of block faces steel post.
2. A 6'-0" Length steel foundation tube, TS 8 x 6 x 3/16, without a soil plate, may be furnished and installed in place of the 4'-6" length steel foundation tube and soil plate shown, Minimum embadment of the 6'-0" length tube shall be 5'-9". A 5/8" ø Hex head bolt and nut shall be installed in the hole in the 6'-0" length tube to keep the wood post from dropping into the tube.
3. To connect railing to 27" terminal system end treatment, transition the top of railing height at a ratio of 120:1 to terminal system end treatment height plus one 12'-6" standard railing section at the transitioned height for a horizontal connection to the end treatment.
4. Install posts in soil.
5. See Revised Standard Plans RSP A77N1 and RSP A77N2 for details.
6. Holes excavation in the slope to construct the buried post end anchor shall be backfilled with selected earth, placed in layers approximately 1'-0" thick. Each layer shall be moistened and thoroughly compacted.

STATE OF CALIFORNIA
DEPARTMENT OF TRANSPORTATION

METAL BEAM GUARD RAILING RECONSTRUCT INSTALLATION

NO SCALE

RSP A77L3 DATED JULY 19, 2013 SUPPLEMENTS THE STANDARD PLANS BOOK DATED 2010.

REVISED STANDARD PLAN RSP A77L3

7-16-13

Dist	COUNTY	ROUTE	POST MILES TOTAL PROJECT	SHEET No.	TOTAL SHEETS
01	Lak	20	13.5/31.4	49	73

Randell D. Hiatt
REGISTERED CIVIL ENGINEER

July 19, 2013
PLANS APPROVAL DATE

REGISTERED PROFESSIONAL ENGINEER
Randell D. Hiatt
No. C50200
Exp. 6-30-15
CIVIL
STATE OF CALIFORNIA

THE STATE OF CALIFORNIA OR ITS OFFICERS OR AGENTS SHALL NOT BE RESPONSIBLE FOR THE ACCURACY OR COMPLETENESS OF SCANNED COPIES OF THIS PLAN SHEET.

TO ACCOMPANY PLANS DATED 5-27-14

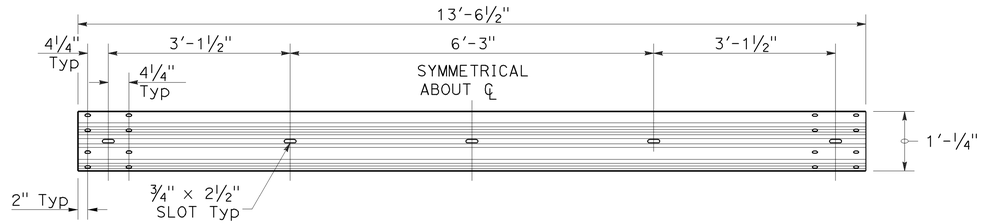

TYPICAL RAIL ELEMENT

NOTE:

1. Slotted holes for splice bolts to overlap ends of rail element.

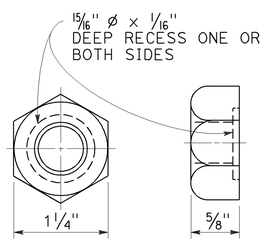

⅝" Ø RECESS NUT

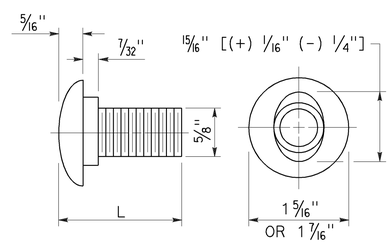

⅝" Ø BUTTON HEAD BOLT

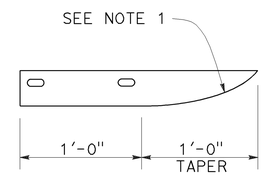

PLAN

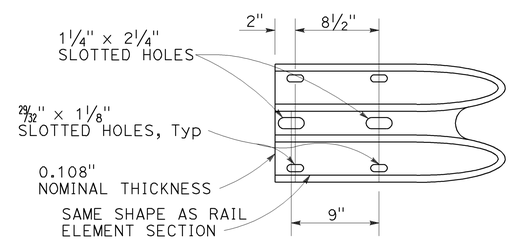

ELEVATION

END CAP
(TYPE A)

BUTTON HEAD BOLT

L	THREAD LENGTH
1⅜"	FULL THREAD LENGTH
2"	FULL THREAD LENGTH
10"	4" Min THREAD LENGTH
18"	4" Min THREAD LENGTH
20"	4" Min THREAD LENGTH
22"	4" Min THREAD LENGTH
26"	4" Min THREAD LENGTH
36"	4" Min THREAD LENGTH
** 2¾"	2" Min THREAD LENGTH
** 19"	4" Min THREAD LENGTH

** For nested rail applications.

STATE OF CALIFORNIA
DEPARTMENT OF TRANSPORTATION

MIDWEST GUARDRAIL SYSTEM STANDARD HARDWARE

NO SCALE

RSP A77M1 DATED JULY 19, 2013 SUPPLEMENTS THE STANDARD PLANS BOOK DATED 2010.

REVISED STANDARD PLAN RSP A77M1

2010 REVISED STANDARD PLAN RSP A77M1

7-3-13

Dist	COUNTY	ROUTE	POST MILES TOTAL PROJECT	SHEET No.	TOTAL SHEETS
01	Lak	20	13.5/31.4	50	73

Randell D. Hiatt
REGISTERED CIVIL ENGINEER

July 19, 2013
PLANS APPROVAL DATE

REGISTERED PROFESSIONAL ENGINEER
Randell D. Hiatt
No. C50200
Exp. 6-30-15
CIVIL
STATE OF CALIFORNIA

THE STATE OF CALIFORNIA OR ITS OFFICERS OR AGENTS SHALL NOT BE RESPONSIBLE FOR THE ACCURACY OR COMPLETENESS OF SCANNED COPIES OF THIS PLAN SHEET.

TO ACCOMPANY PLANS DATED 5-27-14

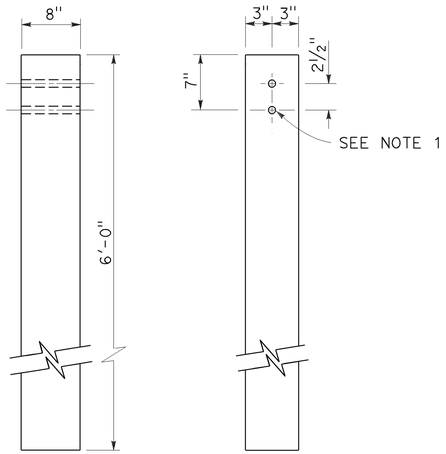

SIDE FRONT

6" x 8" WOOD POST
See Note 3

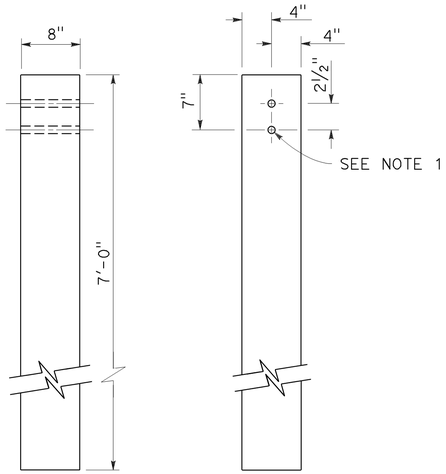

SIDE FRONT

8" x 8" WOOD POST
See Note 4

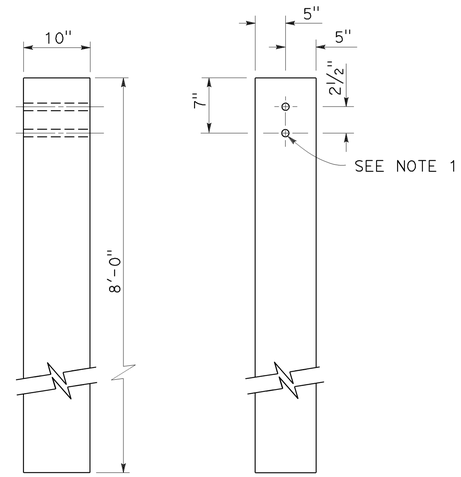

SIDE FRONT

10" x 10" WOOD POST
See Note 5

NOTES:

1. All holes in wood posts and blocks shall be 3/4" Dia ± 1/16".
2. Dimensions shown for wood post are nominal.
3. This post and block combination used for standard line post sections of MGS.
4. This post and 8" x 12" block combination used for line post sections of MGS on narrow roadways.
5. This post and 8" x 12" block combination is typically used where strengthened line post sections of MGS are warranted to shield fixed objects.
6. See Revised Standard Plan RSP A77L3 for use of 6" x 8" and 8" x 8" wood blocks.

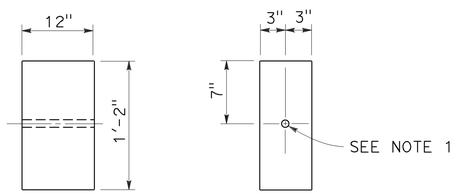

SIDE FRONT

6" x 12" WOOD BLOCK
See Note 3

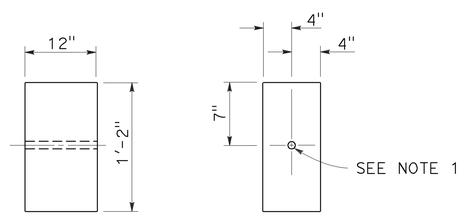

SIDE FRONT

8" x 12" WOOD BLOCK

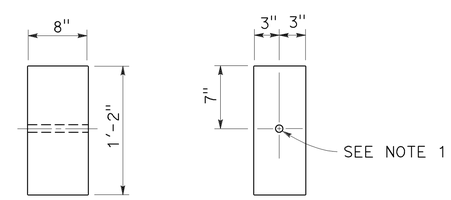

SIDE FRONT

6" x 8" WOOD BLOCK
Only for use with metal beam guard rail see Note 6

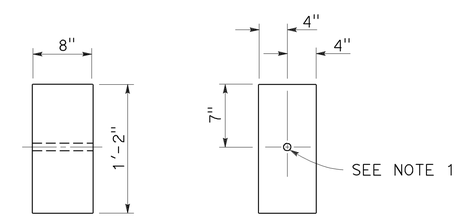

SIDE FRONT

8" x 8" WOOD BLOCK
Only for use with metal beam guard rail see Note 6

STATE OF CALIFORNIA
DEPARTMENT OF TRANSPORTATION

MIDWEST GUARDRAIL SYSTEM WOOD POST AND WOOD BLOCK DETAILS

NO SCALE

RSP A77N1 DATED JULY 19, 2013 SUPPLEMENTS THE STANDARD PLANS BOOK DATED 2010.

REVISED STANDARD PLAN RSP A77N1

2010 REVISED STANDARD PLAN RSP A77N1

7-3-13

Dist	COUNTY	ROUTE	POST MILES TOTAL PROJECT	SHEET No.	TOTAL SHEETS
01	Lak	20	13.5/31.4	51	73

Randell D. Hiatt
REGISTERED CIVIL ENGINEER

November 15, 2013
PLANS APPROVAL DATE

REGISTERED PROFESSIONAL ENGINEER
Randell D. Hiatt
No. C50200
Exp. 6-30-15
CIVIL
STATE OF CALIFORNIA

THE STATE OF CALIFORNIA OR ITS OFFICERS OR AGENTS SHALL NOT BE RESPONSIBLE FOR THE ACCURACY OR COMPLETENESS OF SCANNED COPIES OF THIS PLAN SHEET.

TO ACCOMPANY PLANS DATED 5-27-14

2010 REVISED STANDARD PLAN RSP A77N3

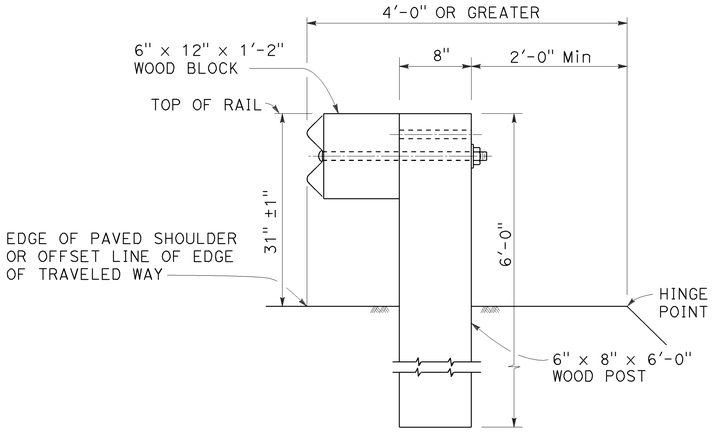

DETAIL A

TYPICAL ROADWAY INSTALLATION

See Note 1

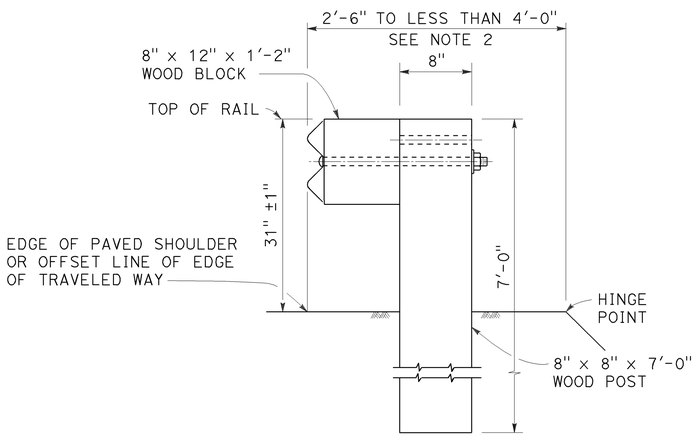

DETAIL B

NARROW ROADWAY INSTALLATION

See Note 1

POST EMBEDMENT

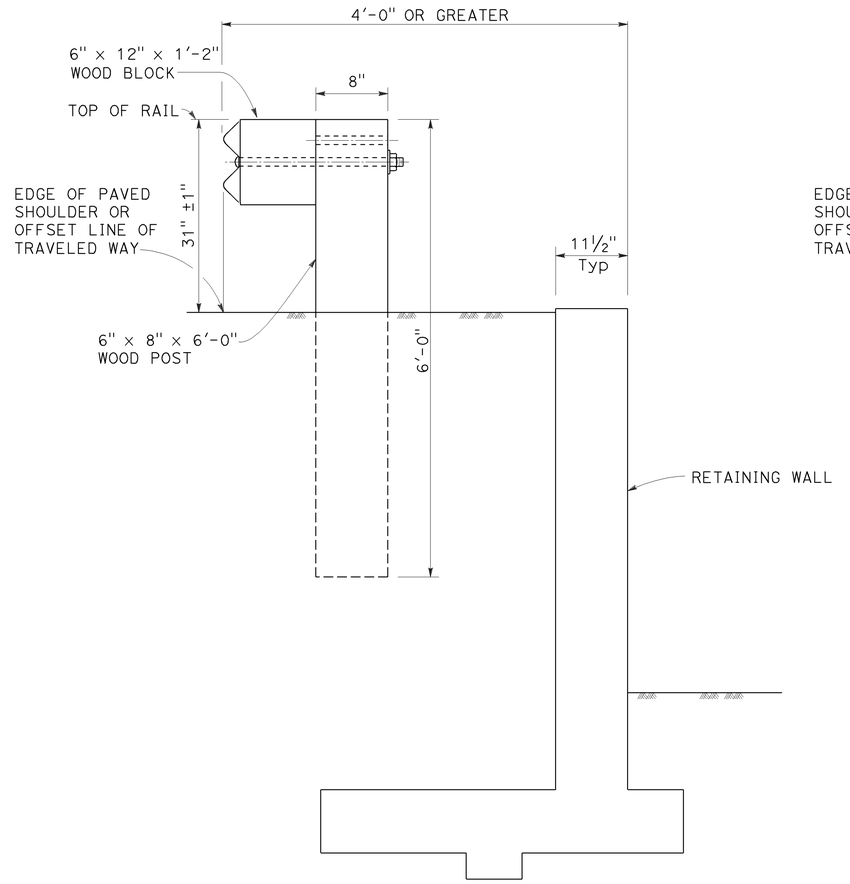

DETAIL C

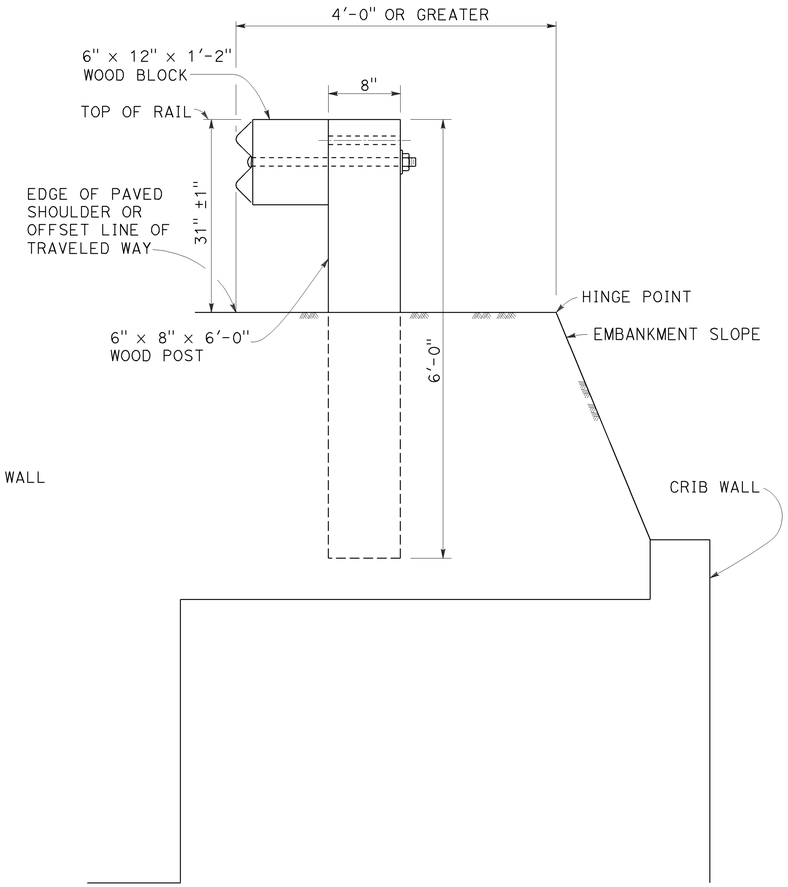

DETAIL D

INSTALLATION AT EARTH RETAINING WALLS

NOTES:

1. These installation details also applicable to steel line post installations. For Detail A, C, and D, where steel line post installations are constructed, W6 x 8.5 or W6 x 9 steel post, 6'-0" in length, with 6" x 12" x 1'-2" notched wood blocks or notched recycled plastic blocks are to be used in place of the size of wood post and wood block shown. For Detail B, where steel line post installations are constructed, W6 x 15 steel post, 8'-0" in length, with 8" x 12" x 1'-2" notched wood blocks or notched recycled plastic blocks are to be used in place of the size of wood post and wood block shown. For additional installation details, see Revised Standard Plan RSP A77L1 and RSP A77L2.
2. Where the distance between the face of the rail and the hinge point is less than 2'-6", see the Project Plans for special details.
3. For dike positioning with MGS installations, see Revised Standard Plan RSP A77N4.

STATE OF CALIFORNIA
DEPARTMENT OF TRANSPORTATION

MIDWEST GUARDRAIL SYSTEM TYPICAL LINE POST EMBEDMENT AND HINGE POINT OFFSET DETAILS

NO SCALE

RSP A77N3 DATED NOVEMBER 15, 2013 SUPERSEDES RSP A77N3
DATED JULY 19, 2013 THAT SUPPLEMENTS THE STANDARD PLANS BOOK DATED 2010.

REVISED STANDARD PLAN RSP A77N3

Dist	COUNTY	ROUTE	POST MILES TOTAL PROJECT	SHEET No.	TOTAL SHEETS
01	Lak	20	13.5/31.4	52	73

Randell D. Hiatt
REGISTERED CIVIL ENGINEER

July 19, 2013
PLANS APPROVAL DATE

REGISTERED PROFESSIONAL ENGINEER
Randell D. Hiatt
No. C50200
Exp. 6-30-15
CIVIL
STATE OF CALIFORNIA

THE STATE OF CALIFORNIA OR ITS OFFICERS OR AGENTS SHALL NOT BE RESPONSIBLE FOR THE ACCURACY OR COMPLETENESS OF SCANNED COPIES OF THIS PLAN SHEET.

TO ACCOMPANY PLANS DATED 5-27-14

NOTES:

1. When necessary to place dike more than 7" in front of face of MGS, only Type C dike may be used. For dike details, see Revised Standard Plan RSP A87B.
2. For standard railing post embedment, see Revised Standard Plan RSP A77N3.
3. MGS delineation to be used where shown on the Project Plans.
4. When dike or curb is placed under MGS, the maximum height of the dike or curb shall be 6". Mountable dike should not be used. For dike and curb details, see Revised Standard Plans RSP A87A and RSP A87B.
5. For details of typical distance between the face of rail and hinge point, see Revised Standard Plan RSP A77N3.
6. For steel line posts, use 1/4 - 20 self-tapping screws in 0.22" diameter holes or 1/4" bolts in 9/32" diameter holes.

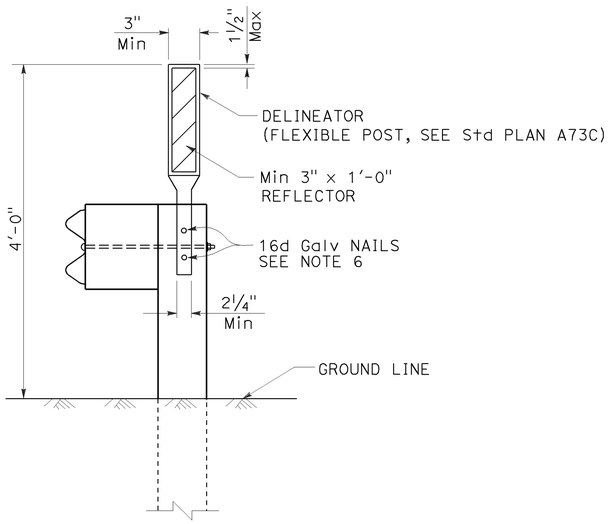

MGS DELINEATION
See Note 3

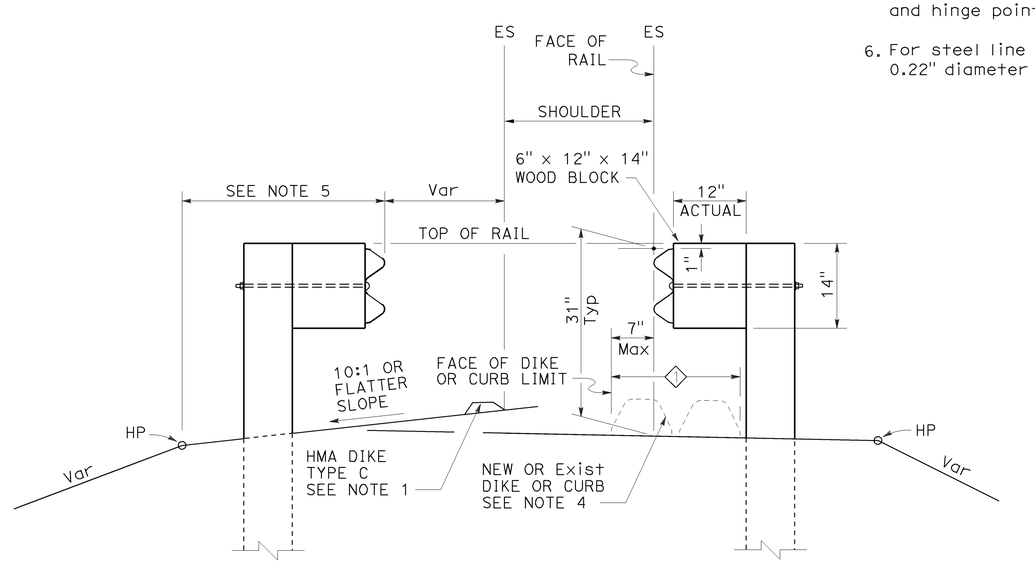

DIKE POSITIONING
See Note 1

1 PERMISSIBLE DIKE OR CURB PLACEMENT AREA

STATE OF CALIFORNIA
DEPARTMENT OF TRANSPORTATION

MIDWEST GUARDRAIL SYSTEM TYPICAL RAILING DELINEATION AND DIKE POSITIONING DETAILS

NO SCALE

RSP A77N4 DATED JULY 19, 2013 SUPPLEMENTS THE STANDARD PLANS BOOK DATED 2010.

REVISED STANDARD PLAN RSP A77N4

2010 REVISED STANDARD PLAN RSP A77N4

7-10-13

Dist	COUNTY	ROUTE	POST MILES TOTAL PROJECT	SHEET No.	TOTAL SHEETS
01	Lak	20	13.5/31.4	53	73

Randell D. Hiatt
REGISTERED CIVIL ENGINEER

July 19, 2013
PLANS APPROVAL DATE

REGISTERED PROFESSIONAL ENGINEER
Randell D. Hiatt
No. C50200
Exp. 6-30-15
CIVIL
STATE OF CALIFORNIA

THE STATE OF CALIFORNIA OR ITS OFFICERS OR AGENTS SHALL NOT BE RESPONSIBLE FOR THE ACCURACY OR COMPLETENESS OF SCANNED COPIES OF THIS PLAN SHEET.

TO ACCOMPANY PLANS DATED 5-27-14

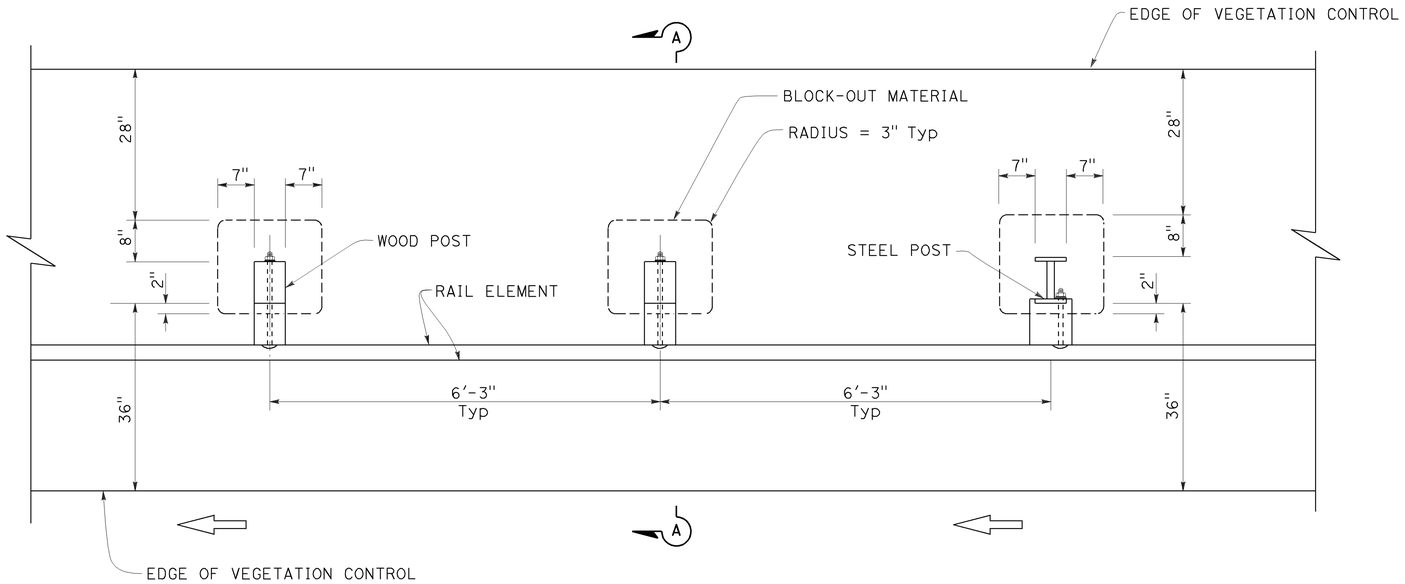

PLAN

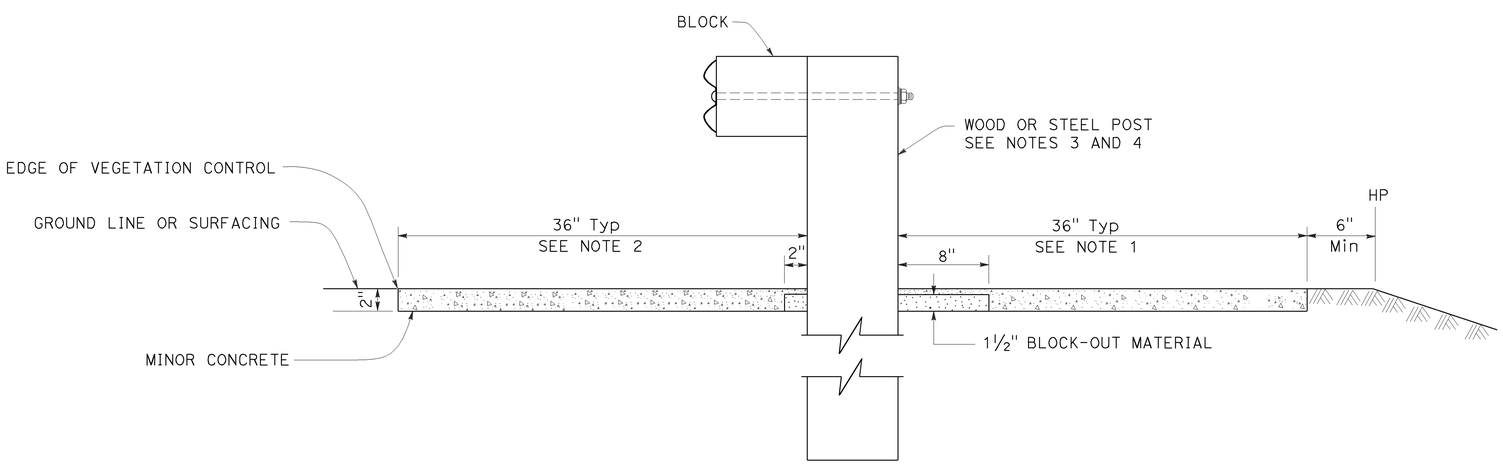

SECTION A-A

NOTES:

1. Where the distance between back of post and hinge point is less than 42", construct vegetation control to 6" from hinge point while maintaining the 8" block-out at back of post. If the 8" block-out at back of post can not be maintained, construct vegetation control flush with the back edge of post.
2. Where dike is constructed under railing, construct vegetation control to back edge of dike. Where paved shoulder is constructed within 36" in front of the post, construct vegetation control to the edge of paved shoulder.
3. For wood post sizes, see Revised Standard Plan RSP A77N1.
4. For steel post sizes, see Revised Standard Plan RSP A77N2.
5. For details not shown, see Revised Standard Plans RSP A77L1 and RSP A77L2.

STATE OF CALIFORNIA
DEPARTMENT OF TRANSPORTATION

MIDWEST GUARDRAIL SYSTEM TYPICAL VEGETATION CONTROL STANDARD RAILING SECTION

NO SCALE

RSP A77N5 DATED JULY 19, 2013 SUPPLEMENTS THE STANDARD PLANS BOOK DATED 2010.

REVISED STANDARD PLAN RSP A77N5

2010 REVISED STANDARD PLAN RSP A77N5

7-3-13

Dist	COUNTY	ROUTE	POST MILES TOTAL PROJECT	SHEET No.	TOTAL SHEETS
01	Lak	20	13.5/31.4	54	73

Randell D. Hiatt
REGISTERED CIVIL ENGINEER

July 19, 2013
PLANS APPROVAL DATE

REGISTERED PROFESSIONAL ENGINEER
Randell D. Hiatt
No. C50200
Exp. 6-30-15
CIVIL
STATE OF CALIFORNIA

THE STATE OF CALIFORNIA OR ITS OFFICERS OR AGENTS SHALL NOT BE RESPONSIBLE FOR THE ACCURACY OR COMPLETENESS OF SCANNED COPIES OF THIS PLAN SHEET.

TO ACCOMPANY PLANS DATED 5-27-14

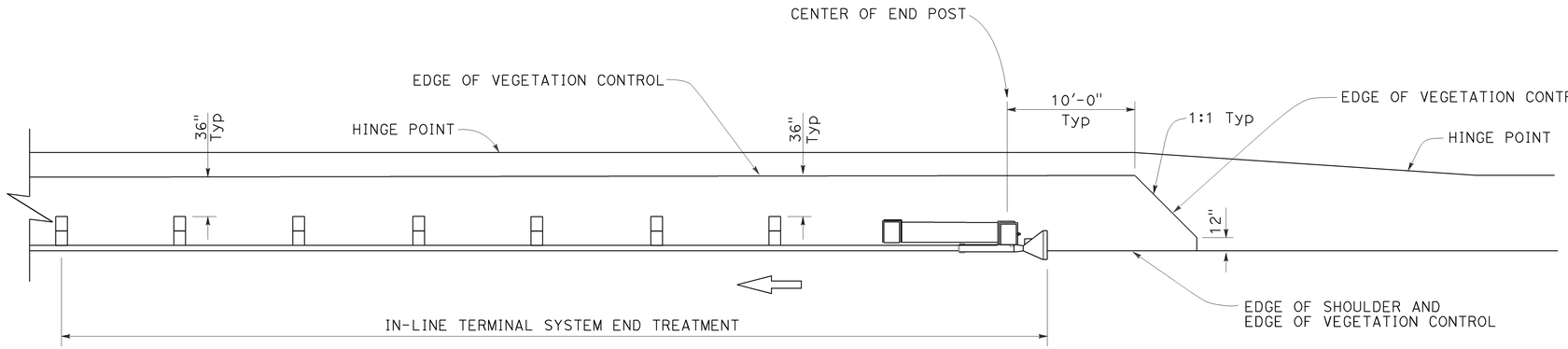

PLAN

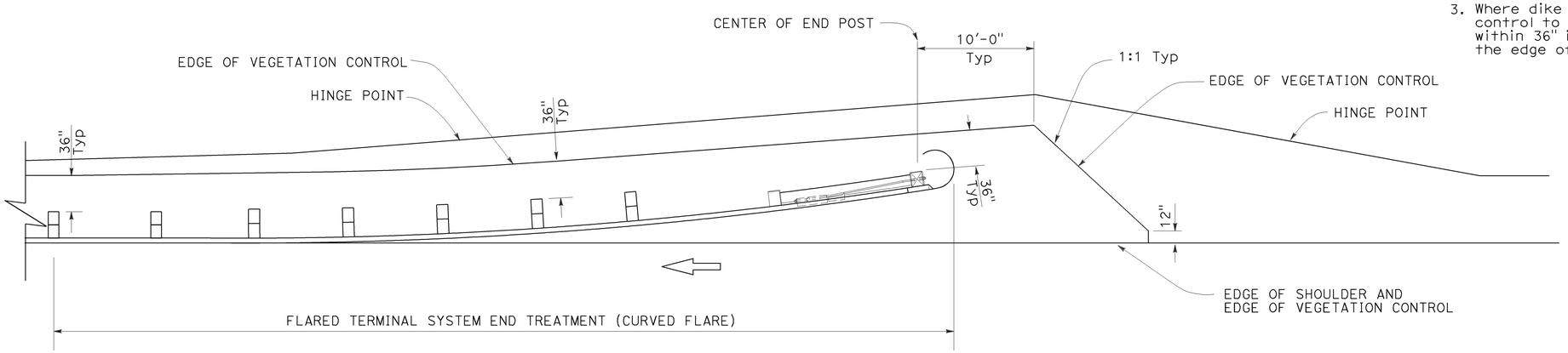

PLAN

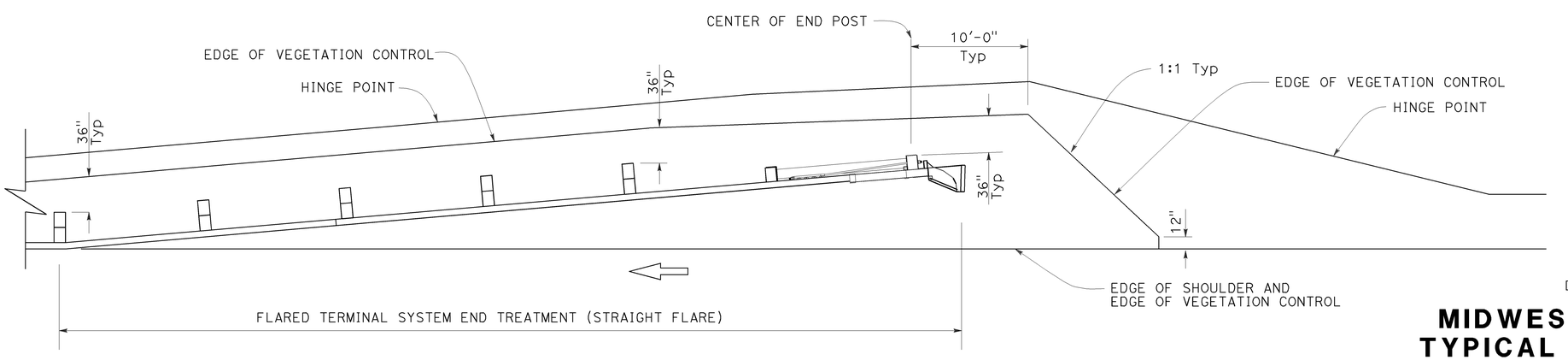

PLAN

NOTES:

1. See Revised Standard Plan RSP A77N5 for additional vegetation control details.
2. Where the distance between back of post and hinge point is less than 42", construct vegetation control to 6" from hinge point while maintaining the 8" block-out at back of post. If the 8" block-out at back of post can not be maintained, construct vegetation control flush with the back edge of post.
3. Where dike is constructed under railing, construct vegetation control to back edge of dike. Where paved shoulder is constructed within 36" in front of the post, construct vegetation control to the edge of paved shoulder.

STATE OF CALIFORNIA
DEPARTMENT OF TRANSPORTATION

MIDWEST GUARDRAIL SYSTEM TYPICAL VEGETATION CONTROL FOR TERMINAL SYSTEM END TREATMENTS

NO SCALE

RSP A77N6 DATED JULY 19, 2013 SUPPLEMENTS THE STANDARD PLANS BOOK DATED 2010.

REVISED STANDARD PLAN RSP A77N6

2010 REVISED STANDARD PLAN RSP A77N6

6-12-13

Dist	COUNTY	ROUTE	POST MILES TOTAL PROJECT	SHEET No.	TOTAL SHEETS
01	Lak	20	13.5/31.4	55	73

Randell D. Hiatt
REGISTERED CIVIL ENGINEER

July 19, 2013
PLANS APPROVAL DATE

REGISTERED PROFESSIONAL ENGINEER
Randell D. Hiatt
No. C50200
Exp. 6-30-15
CIVIL
STATE OF CALIFORNIA

THE STATE OF CALIFORNIA OR ITS OFFICERS OR AGENTS SHALL NOT BE RESPONSIBLE FOR THE ACCURACY OR COMPLETENESS OF SCANNED COPIES OF THIS PLAN SHEET.

TO ACCOMPANY PLANS DATED 5-27-14

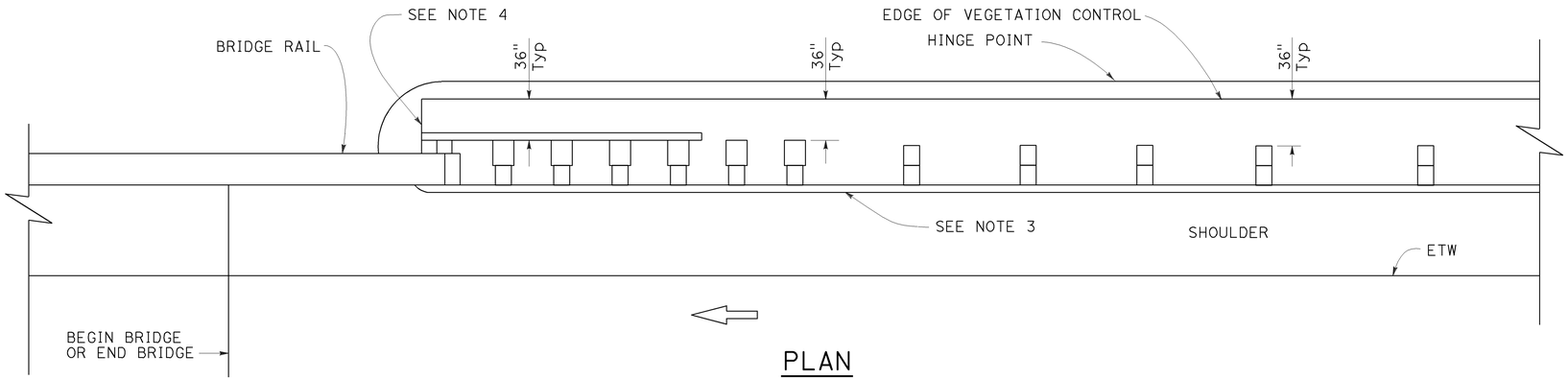

PLAN

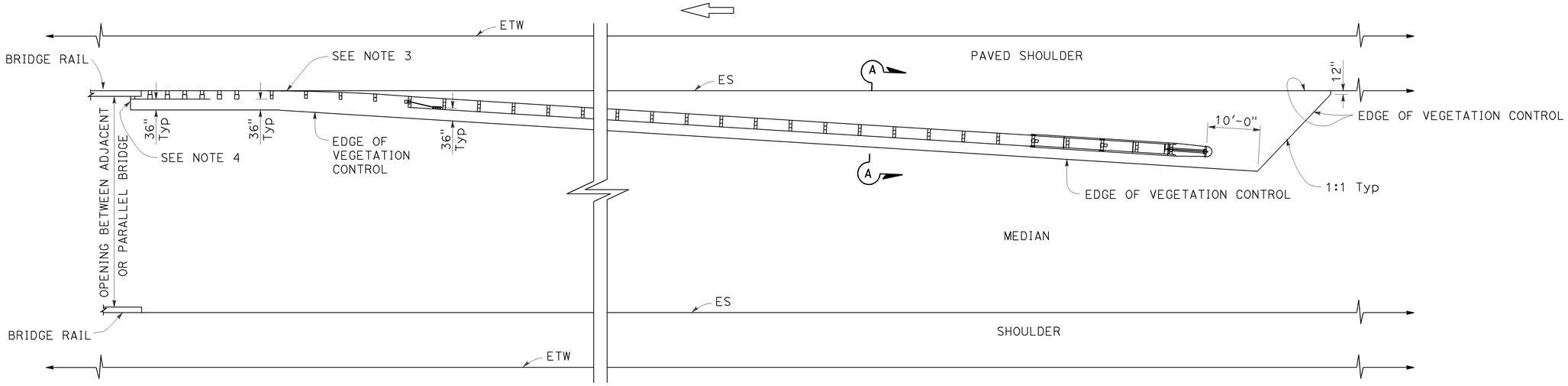

PLAN

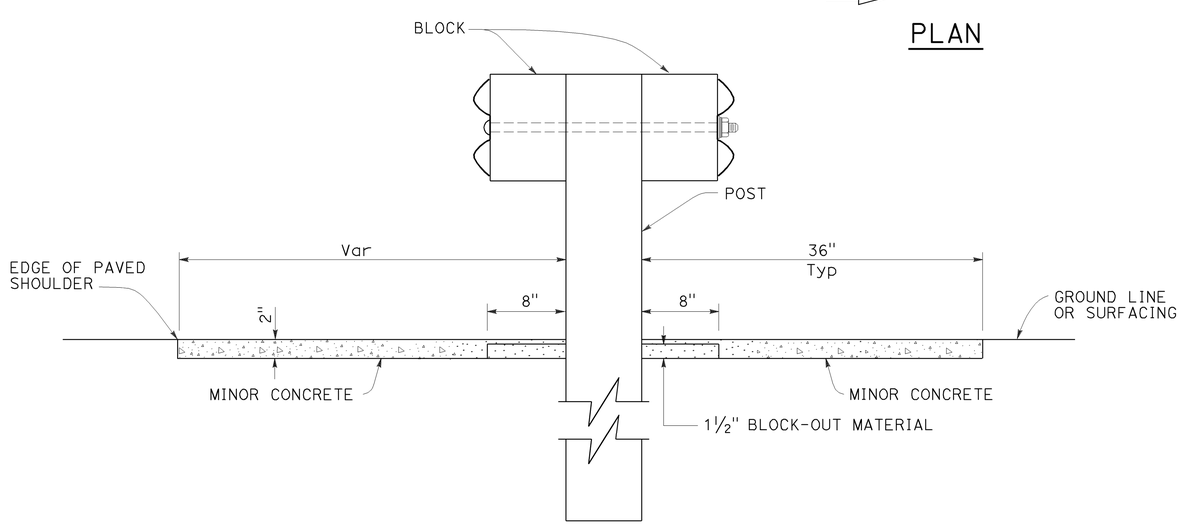

SECTION A-A

NOTES:

1. See Revised Standard Plan RSP A77N5 for additional vegetation control details.
2. Where the distance between back of post and hinge point is less than 42", construct vegetation control to 6" from hinge point while maintaining the 8" block-out at back of post. If the 8" block-out at back of post can not be maintained, construct vegetation control flush with the back edge of post.
3. Where dike is constructed under railing, construct vegetation control to back edge of dike. Where paved shoulder is constructed within 36" in front of the post, construct vegetation control to the edge of paved shoulder.
4. End vegetation control at end of backside rail element.

STATE OF CALIFORNIA
DEPARTMENT OF TRANSPORTATION

MIDWEST GUARDRAIL SYSTEM TYPICAL VEGETATION CONTROL AT STRUCTURE APPROACH

NO SCALE

RSP A77N7 DATED JULY 19, 2013 SUPPLEMENTS THE STANDARD PLANS BOOK DATED 2010.

REVISED STANDARD PLAN RSP A77N7

2010 REVISED STANDARD PLAN RSP A77N7

6-12-13

Dist	COUNTY	ROUTE	POST MILES TOTAL PROJECT	SHEET No.	TOTAL SHEETS
01	Lak	20	13.5/31.4	56	73

Randell D. Hiatt
REGISTERED CIVIL ENGINEER

November 15, 2013
PLANS APPROVAL DATE

REGISTERED PROFESSIONAL ENGINEER
Randell D. Hiatt
No. C50200
Exp. 6-30-15
CIVIL
STATE OF CALIFORNIA

THE STATE OF CALIFORNIA OR ITS OFFICERS OR AGENTS SHALL NOT BE RESPONSIBLE FOR THE ACCURACY OR COMPLETENESS OF SCANNED COPIES OF THIS PLAN SHEET.

TO ACCOMPANY PLANS DATED 5-27-14

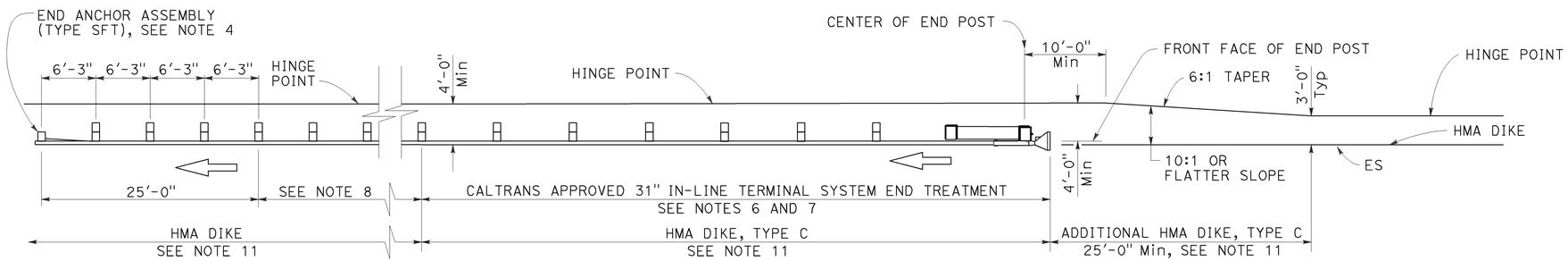

TYPE 11A LAYOUT

(Embankment MGS installation with 31" in-line end treatment at traffic approach end of railing) see Note 5

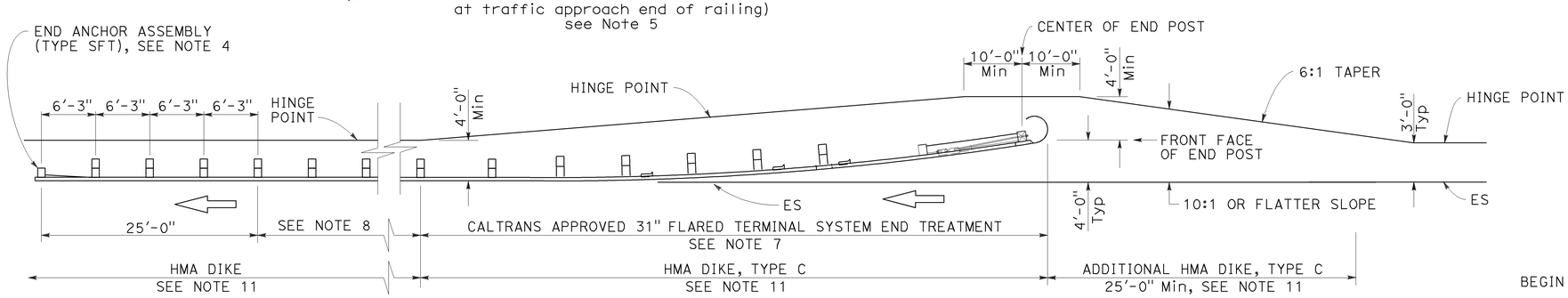

TYPE 11B LAYOUT

(Embankment MGS installation with 31" flared end treatment at traffic approach end of railing) see Note 5

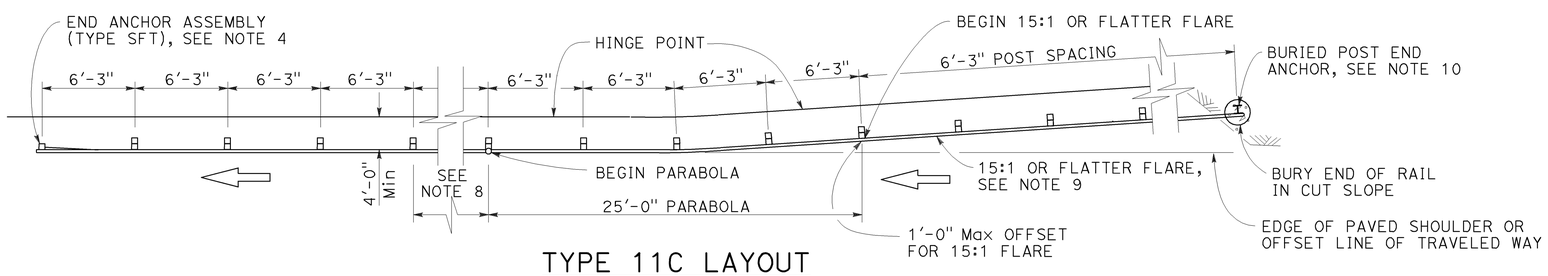

TYPE 11C LAYOUT

(Embankment MGS installation with buried end anchor treatment at traffic approach end of railing) see Notes 5 and 11

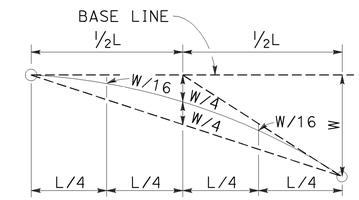

TYPICAL PARABOLIC LAYOUT

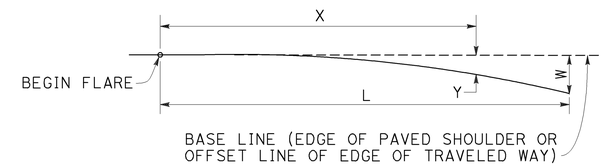

$$Y = \frac{WX^2}{L^2}$$

Y = OFFSET FROM BASE LINE
W = MAXIMUM OFFSET
X = DISTANCE ALONG BASE LINE
L = LENGTH OF FLARE

PARABOLIC FLARE OFFSETS

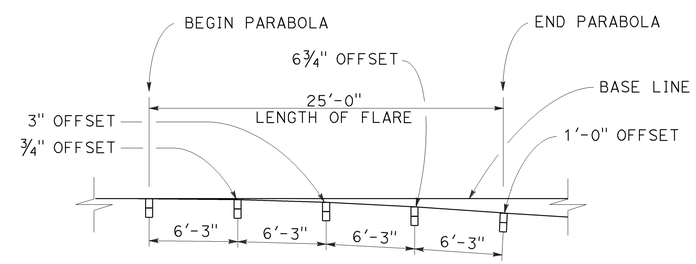

TYPICAL FLARE OFFSETS FOR 1 FOOT Max END OFFSET

NOTES:

1. Line post, blocks and hardware to be used are shown on Revised Standard Plans RSP A77L1, RSP A77L2, RSP A77M1, RSP A77N1 and RSP A77N2.
2. MGS post spacing to be 6'-3" center to center, except as otherwise noted.
3. Except as noted, line posts are 6" x 8" x 6'-0" wood with 6" x 12" x 1'-2" wood blocks. W6 x 8.5 or W6 x 9 steel posts, 6'-0" in length, with 6" x 12" x 1'-2" notched wood blocks or recycled plastic blocks may be used for 6" x 8" x 6'-0" wood post with 6" x 12" x 1'-2" wood blocks where applicable and when specified.
4. For End Anchor Assembly (Type SFT) details, see Revised Standard Plan RSP A77S1.
5. Layout Types 11A, 11B or 11C are typically used where MGS is recommended to shield embankment slopes and a crashworthy end treatment is required for only one direction of traffic.
6. 31" in-line terminal system end treatments are used where site conditions will not accommodate a flared end treatment.
7. The type of 31" terminal system end treatment to be used will be shown on the Project Plans.
8. Dependent on site conditions (embankment height and side slope), construction of additional MGS (length equal to multiples of 12'-6" with 6'-3" post spacing) may be advisable.
9. The 15:1 or flatter flare used with buried end anchors is based on the edge of the paved shoulder or offset line of edge of the traveled way. The length of MGS within the 15:1 or flatter flare is based on site conditions and should be a length equal to multiples of 12'-6".
10. For details of the buried post end anchor used with Type 11C Layout, see Revised Standard Plan RSP A77T2.
11. Where placement of dike is required with MGS installations, see Revised Standard Plan RSP A77N4 for dike positioning details.

STATE OF CALIFORNIA
DEPARTMENT OF TRANSPORTATION

MIDWEST GUARDRAIL SYSTEM TYPICAL LAYOUTS FOR EMBANKMENTS

NO SCALE

RSP A77P1 DATED NOVEMBER 15, 2013 SUPERSEDES RSP A77P1 DATED JULY 19, 2013 THAT SUPPLEMENTS THE STANDARD PLANS BOOK DATED 2010.

REVISED STANDARD PLAN RSP A77P1

2010 REVISED STANDARD PLAN RSP A77P1

10-4-13

Dist	COUNTY	ROUTE	POST MILES TOTAL PROJECT	SHEET No.	TOTAL SHEETS
01	Lak	20	13.5/31.4	57	73

Randell D. Hiatt
REGISTERED CIVIL ENGINEER

July 19, 2013
PLANS APPROVAL DATE

REGISTERED PROFESSIONAL ENGINEER
Randell D. Hiatt
No. C50200
Exp. 6-30-15
CIVIL
STATE OF CALIFORNIA

THE STATE OF CALIFORNIA OR ITS OFFICERS OR AGENTS SHALL NOT BE RESPONSIBLE FOR THE ACCURACY OR COMPLETENESS OF SCANNED COPIES OF THIS PLAN SHEET.

TO ACCOMPANY PLANS DATED 5-27-14

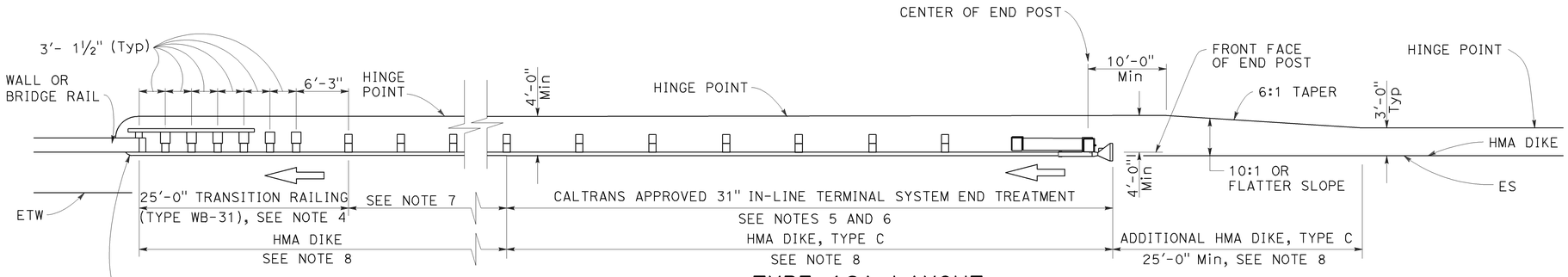

TYPE 12A LAYOUT

(MGS installation at structure approach with
31" In-line end treatment at traffic approach end of railing)
See Notes 9

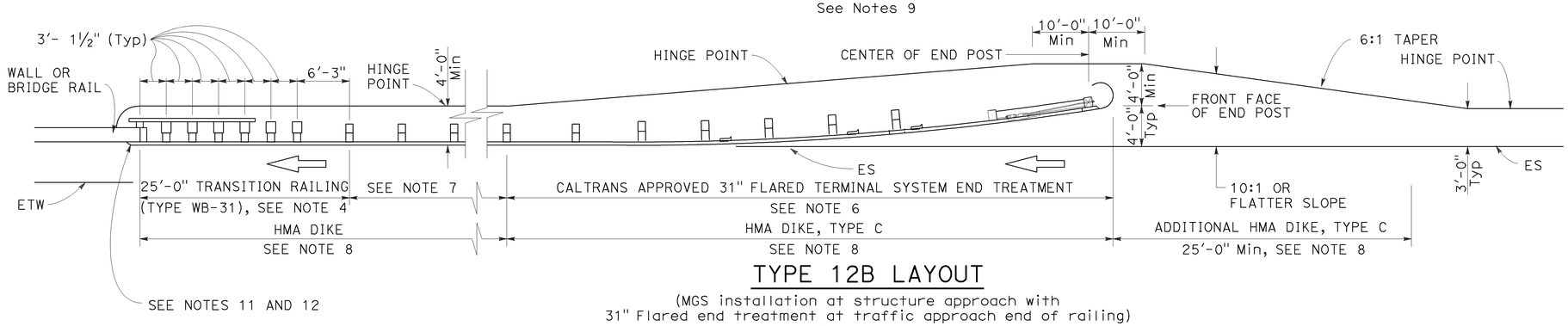

TYPE 12B LAYOUT

(MGS installation at structure approach with
31" Flared end treatment at traffic approach end of railing)
See Notes 9

NOTES:

1. Line post, blocks and hardware to be used are shown on Revised Standard Plans RSP A77L1, RSP A77L2, RSP A77M1, RSP A77N1 and RSP A77N2.
2. MGS post spacing to be 6'-3" center to center, except as otherwise noted.
3. Except as noted, line posts are 6" x 8" x 6'-0" wood with 6" x 12" x 1'-2" wood blocks. W6 x 8.5 or W6 x 9 steel posts, 6'-0" in length, with 6" x 12" x 1'-2" notched wood blocks or plastic blocks may be used for 6" x 8" x 6'-0" wood posts with 6" x 12" x 1'-2" wood blocks where applicable and when specified.
4. For Transition Railing (Type WB-31) details for Types 12A and 12B Layouts, see Revised Standard Plan RSP A77U4.
5. 31" in-line terminal system end treatments are used where site conditions will not accommodate a 31" flared end treatment.
6. The type 31" of terminal system end treatment to be used will be shown on the Project Plans.
7. Dependent on site conditions (embankment height, side slopes, or other fixed objects), it may be advisable to construct additional guard railing (a length equal to multiples of 12'-6" with 6'-3" post spacing) between the transition railing and end treatment. A 12.5 degree angle of departure can be drawn on the Project Plans from the edge of traveled way through the outer most point of the fixed object to determine the additional length of railing needed.
8. Where placement of dike is required with guard railing installations, see Revised Standard Plan RSP A77N4 for dike positioning details.
9. Type 12A or Type 12B Layouts are typically used:
   a. To the right of approaching traffic, at the end of a structure, on two-lane conventional highway where the roadbed width across the structure is less than 40 feet.
   b. To the left of approaching traffic, at the end of a structure, on two-lane conventional highway where the roadbed width across the structure is less than 40 feet.
   c. To the right of approaching traffic at the end of each structure on multilane freeways or expressways with separate adjacent or parallel bridges.
   d. To the right of approaching traffic at the end of the structure on multilane freeways or expressways with decked median on the bridge.
10. See Revised Standard Plan RSP A77Q3 for typical layout used left of approaching traffic at the ends of each structure on multilane freeways or expressways with separate adjacent or parallel bridges.
11. For additional details of typical connections to bridge rail, see Connection Detail AA on Revised Standard Plans RSP A77U1 and RSP A77U2 and Connection Detail FF on Revised Standard Plans RSP A77V1 and RSP A77V2.
12. For additional details of a typical connection to walls or abutments, see Revised Standard Plan RSP A77U3.

STATE OF CALIFORNIA
DEPARTMENT OF TRANSPORTATION

MIDWEST GUARDRAIL SYSTEM TYPICAL LAYOUTS FOR STRUCTURE APPROACH

NO SCALE

RSP A77Q1 DATED JULY 19, 2013 SUPPLEMENTS THE STANDARD PLANS BOOK DATED 2010.

REVISED STANDARD PLAN RSP A77Q1

2010 REVISED STANDARD PLAN RSP A77Q1

6-19-13

Dist	COUNTY	ROUTE	POST MILES TOTAL PROJECT	SHEET No.	TOTAL SHEETS
01	Lak	20	13.5/31.4	58	73

Randell D. Hiatt
REGISTERED CIVIL ENGINEER

July 19, 2013
PLANS APPROVAL DATE

REGISTERED PROFESSIONAL ENGINEER Randell D. Hiatt No. C50200 Exp. 6-30-15 CIVIL STATE OF CALIFORNIA

THE STATE OF CALIFORNIA OR ITS OFFICERS OR AGENTS SHALL NOT BE RESPONSIBLE FOR THE ACCURACY OR COMPLETENESS OF SCANNED COPIES OF THIS PLAN SHEET.

TO ACCOMPANY PLANS DATED 5-27-14

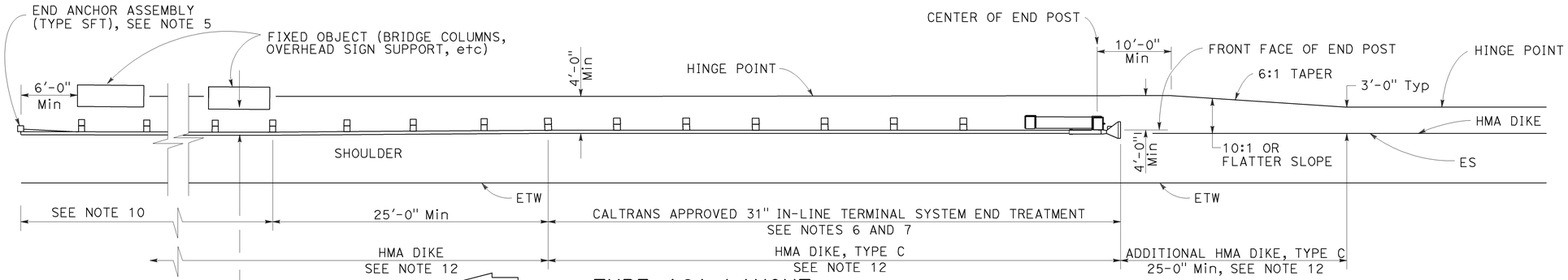

TYPE 16A LAYOUT

(MGS installation at roadside fixed object or objects with 31" in-line end treatment at traffic approach end of railing)
See Notes 11 and 12

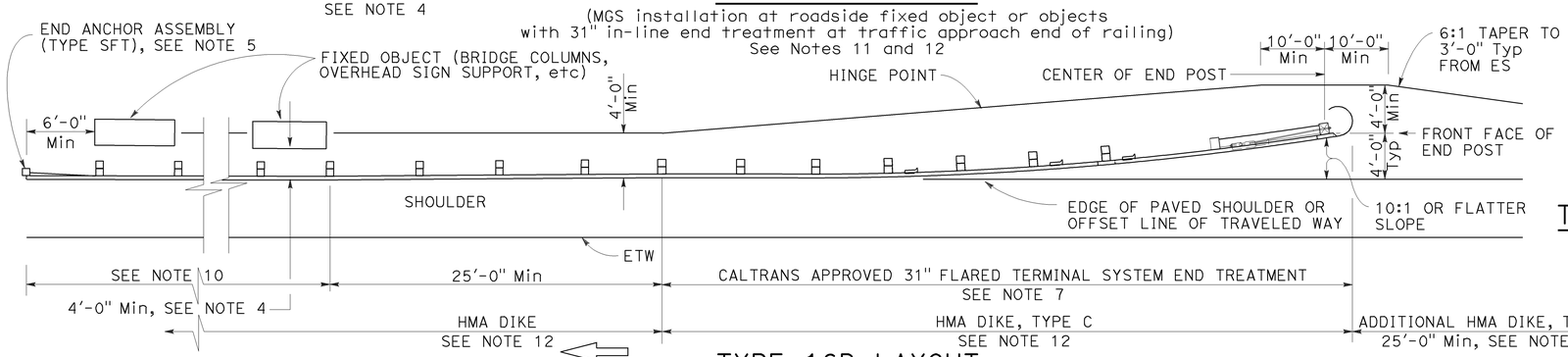

TYPE 16B LAYOUT

(MGS installation at roadside fixed object or objects with 31' flared end treatment at traffic approach end of railing)
See Notes 11 and 12

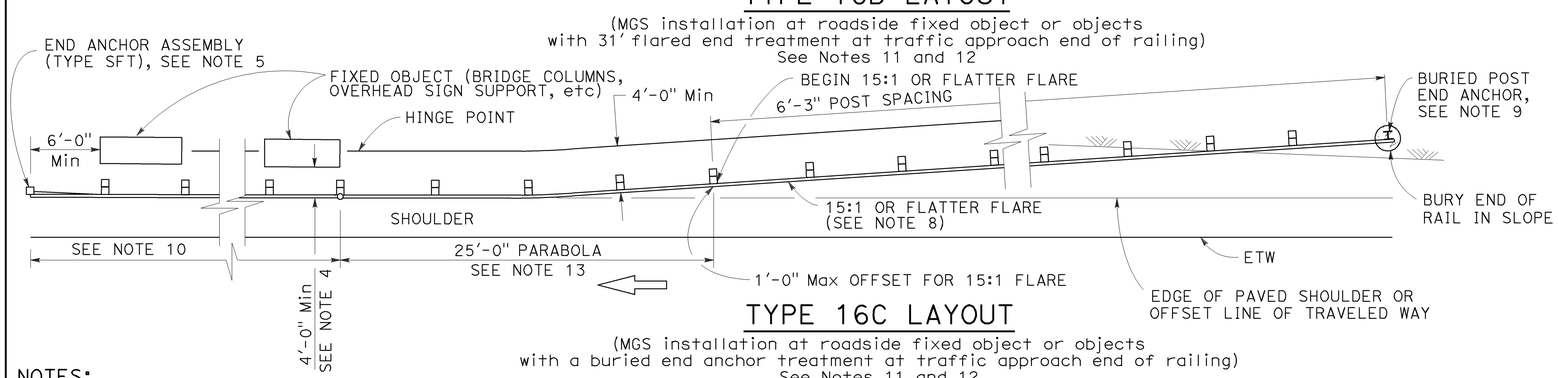

TYPE 16C LAYOUT

(MGS installation at roadside fixed object or objects with a buried end anchor treatment at traffic approach end of railing)
See Notes 11 and 12

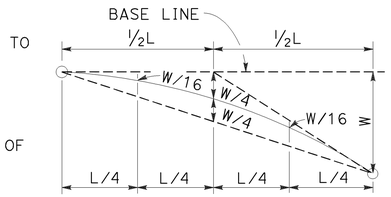

TYPIC AL PARABOLIC LAYOUT

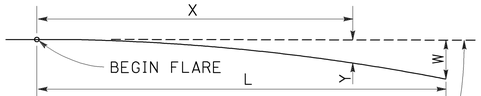

BASE LINE (EDGE OF PAVED SHOULDER OR OFFSET LINE OF EDGE OF TRAVELED WAY)

$$Y = \frac{WX^2}{L^2}$$

Y = OFFSET FROM BASE LINE
W = MAXIMUM OFFSET
X = DISTANCE ALONG BASE LINE
L = LENGTH OF FLARE

PARABOLIC FLARE OFFSETS

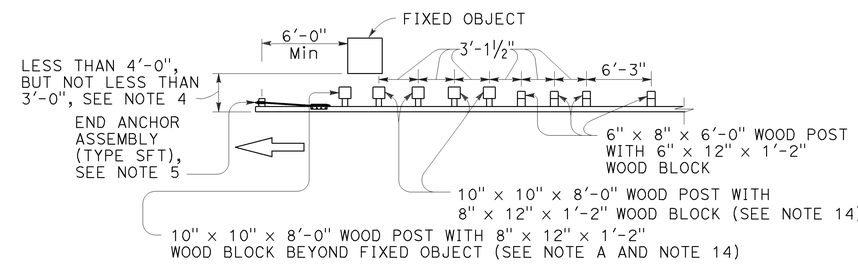

NOTE A: For a series of fixed objects (bridge columns, overhead sign supports, etc.) additional 10" x 10" x 8'-0" wood post with 8" x 12" x 1'-2" wood blocks at 3'-1½" center to center spacing are to be used between fixed objects.

STRENGTHENED MIDWEST GUARDRAIL SYSTEM SECTIONS FOR FIXED OBJECT

Use strengthened MGS sections with Types 16A, 16B or 16C layouts where minimum clearance between the face of the railing and fixed object(s) is less than 4'-0", but not less than 3'-0". See Note 4

NOTES:

1. Line post, blocks and hardware to be used are shown on Revised Standard Plans RSP A77L1, RSP A77L2, RSP A77M1, RSP A77N1 and RSP A77N2.
2. MGS post spacing to be 6'-3" center to center, except as otherwise noted.
3. Except as noted, line posts are 6" x 8" x 6'-0" wood with 6" x 12" x 1'-2" wood blocks. W6 x 8.5 or W6 x 9 steel posts, 6'-0" in length, with 6" x 12" x 1'-2" notched wood blocks or notched recycled plastic blocks may be used for 6" x 8" x 6'-0" wood line posts with 6" x 12" x 1'-2" wood blocks where applicable and when specified.
4. A 4'-0" minimum clearance is required between the face of the railing and the face of a fixed object located directly behind MGS sections with post spacing of 6'-3". Construct MGS as shown in the detail "Strengthened Midwest Guardrail System Sections for Fixed Object" on this plan, where the clearance between the face of the railing and the face of a fixed object is less than 4'-0", but not less than 3'-0". Where the clearance is less than 3'-0", a concrete wall or barrier should be constructed to shield the fixed object(s).
5. For End Anchor Assembly (Type SFT) details, see Revised Standard Plan RSP A77S1.
6. 31" in-line terminal system end treatments are used where site conditions will not accommodate a 31" flared end treatment.
7. The type of 31" terminal system to be used will be shown on the Project Plans.
8. The 15:1 or flatter flare used with Type 16C Layout is based on the edge of the paved shoulder or offset line of edge of the traveled way. The length of MGS within the 15:1 or flatter flare is based on site conditions and should be a length equal to multiples of 12'-6".
9. For details of the Buried Post End Anchor used with Type 16C Layout, see Revised Standard Plan RSP A77T2.
10. As site conditions dictate, construct additional MGS to shield fixed object(s). Additional MGS length equal to multiples of 12'-6". Post spacing at 6'-3" except as specified in Note 4.
11. Layout Types 16A, 16B or 16C are typically used where MGS is recommended to shield roadside fixed object(s) and a crashworthy 31" end treatment is required for only one direction of traffic.
12. Where placement of dike is required with MGS, see Revised Standard Plan RSP A77N4 for dike positioning details.
13. For typical flare offsets for 25'-0" length parabola with maximum offset of 1'-0", see Revised Standard Plan RSP A77P1.
14. W6 x 15 steel post, 8'-0" in length, with 8" x 12" x 1'-2" notched wood block or notched recycled plastic blocks may be used in place of the 10" x 10" x 8'-0" wood post with 8" x 12" x 1'-2" wood block shown in the detail "Strengthened Midwest Guardrail System Sections for Fixed Object".

STATE OF CALIFORNIA
DEPARTMENT OF TRANSPORTATION

MIDWEST GUARDRAIL SYSTEM TYPICAL LAYOUTS FOR ROADSIDE FIXED OBJECTS

NO SCALE

RSP A77R3 DATED JULY 19, 2013 SUPPLEMENTS THE STANDARD PLANS BOOK DATED 2010.

REVISED STANDARD PLAN RSP A77R3

2010 REVISED STANDARD PLAN RSP A77R3

6-20-13

Dist	COUNTY	ROUTE	POST MILES TOTAL PROJECT	SHEET No.	TOTAL SHEETS
01	Lak	20	13.5/31.4	59	73

Randell D. Hiatt
REGISTERED CIVIL ENGINEER

July 19, 2013
PLANS APPROVAL DATE

REGISTERED PROFESSIONAL ENGINEER
Randell D. Hiatt
No. C50200
Exp. 6-30-15
CIVIL
STATE OF CALIFORNIA

THE STATE OF CALIFORNIA OR ITS OFFICERS OR AGENTS SHALL NOT BE RESPONSIBLE FOR THE ACCURACY OR COMPLETENESS OF SCANNED COPIES OF THIS PLAN SHEET.

TO ACCOMPANY PLANS DATED 5-27-14

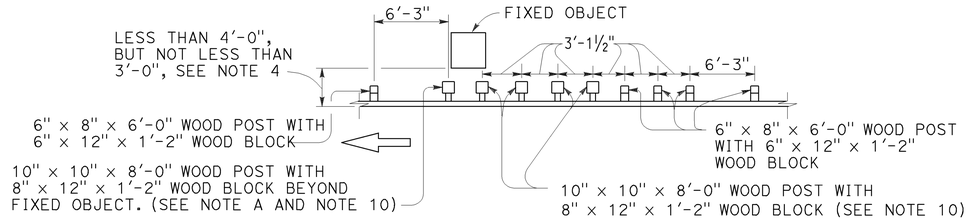

NOTE A: For a series of fixed objects (bridge columns, overhead sign supports, etc.) additional 10" x 10" x 8'-0" wood post with 8" x 12" x 1'-2" wood blocks at 3'-1½" center to center spacing are to be used between fixed object(s).

STRENGTHENED MIDWEST GUARDRAIL SYSTEM SECTIONS FOR FIXED OBJECT

Use strengthened MGS sections with layout Types 16D or 16E where minimum clearance between the face of the MGS and fixed object(s) is less than 4'-0", but not less than 3'-0". See Note 4.

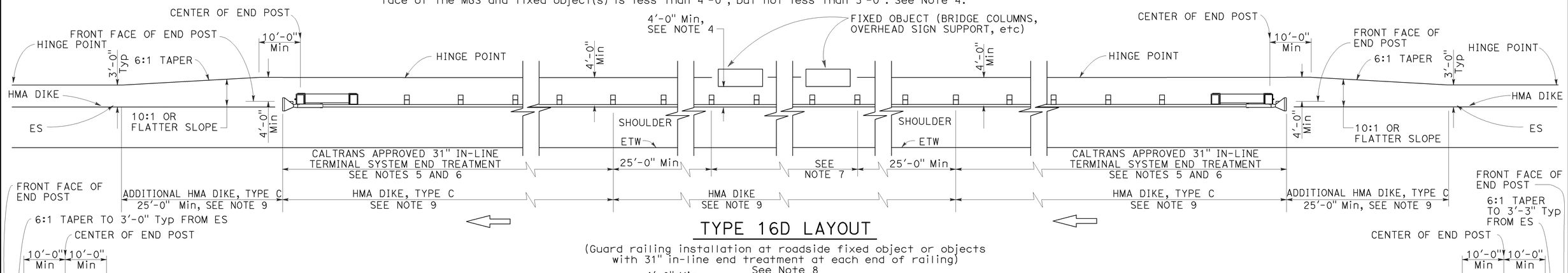

TYPE 16D LAYOUT

(Guard railing installation at roadside fixed object or objects with 31" in-line end treatment at each end of railing) See Note 8

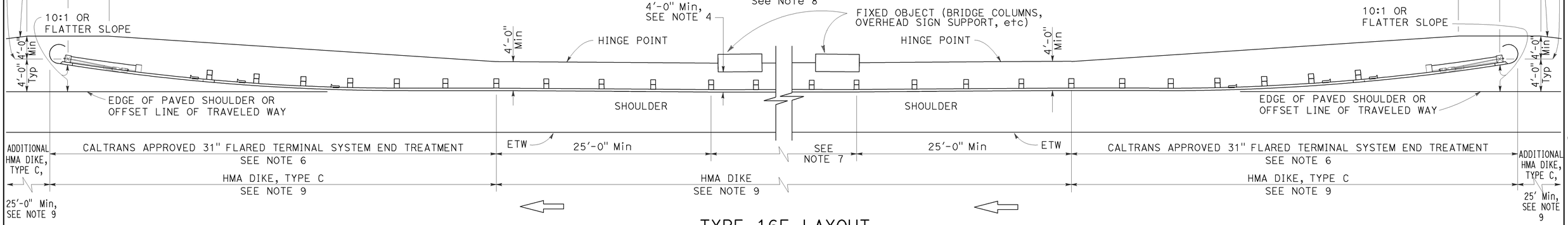

TYPE 16E LAYOUT

(MGS installation at roadside fixed object or objects with 31" flared end treatment at each end of railing) See Note 8

NOTES:

1. Line post, blocks and hardware to be used are shown on Revised Standard Plans RSP A77L1, RSP A77L2, RSP A77M1, RSP A77N1 and RSP A77N2.
2. MGS post spacing to be 6'-3" center to center, except as otherwise noted.
3. Except as noted, line posts are 6" x 8" x 6'-0" wood with 6" x 12" x 1'-2" wood blocks. W6 x 8.5 or W6 x 9 steel posts, 6'-0" in length, with 6" x 12" x 1'-2" notched wood blocks or notched recycled plastic blocks may be used for 6" x 8" x 6'-0" wood line posts with 6" x 12" x 1'-2" wood blocks where applicable and when specified.
4. A 4'-0" minimum clearance is required between the face of the railing and the face of a fixed object located directly behind MGS sections with post spacing at 6'-3". Construct MGS as shown in the detail "Strengthened Midwest Guardrail System Sections for Fixed Object". on this plan, where the clearance between the face of the railing and the face of a fixed object is less than 4'-0", but not less than 3'-0". Where the clearance is less than 3'-0", a concrete wall or barrier should be constructed to shield the fixed object(s).
5. 31" in-line terminal system end treatments are used where site conditions will not accommodate a 31" flared end treatment.
6. The type of 31" terminal system to be used will be shown on the Project Plans.
7. As site conditions dictate, construct additional MGS to shield fixed object(s). Additional MGS length equal to multiples of 12'-6". Post spacing at 6'-3", except as specified in Note 4.
8. Layout Types 16D through 16L, shown on the A77R Series of Standard Plans, are typically used where MGS is recommended to shield roadside fixed object(s) and a crashworthy 31" end treatment is required for both directions of traffic.
9. Where placement of dike is required with MGS, see Revised Standard Plan RSP A77N4 for dike positioning details.
10. W6 x 15 steel post, 8'-0" in length, with 8" x 12" x 1'-2" notched wood block or notched recycled plastic block may be used in place of the 10" x 10" x 8'-0" wood post with 8" x 12" x 1'-2" wood block shown in the detail "Strengthened Midwest Guardrail System Sections for Fixed Object".

STATE OF CALIFORNIA
DEPARTMENT OF TRANSPORTATION

MIDWEST GUARDRAIL SYSTEM TYPICAL LAYOUTS FOR ROADSIDE FIXED OBJECTS

NO SCALE

RSP A77R4 DATED JULY 19, 2013 SUPPLEMENTS THE STANDARD PLANS BOOK DATED 2010.

REVISED STANDARD PLAN RSP A77R4

2010 REVISED STANDARD PLAN RSP A77R4

6-12-13

Dist	COUNTY	ROUTE	POST MILES TOTAL PROJECT	SHEET No.	TOTAL SHEETS
01	Lak	20	13.5/31.4	60	73

Randell D. Hiatt
REGISTERED CIVIL ENGINEER

November 15, 2013
PLANS APPROVAL DATE

REGISTERED PROFESSIONAL ENGINEER
Randell D. Hiatt
No. C50200
Exp. 6-30-15
CIVIL
STATE OF CALIFORNIA

THE STATE OF CALIFORNIA OR ITS OFFICERS OR AGENTS SHALL NOT BE RESPONSIBLE FOR THE ACCURACY OR COMPLETENESS OF SCANNED COPIES OF THIS PLAN SHEET.

TO ACCOMPANY PLANS DATED 5-27-14

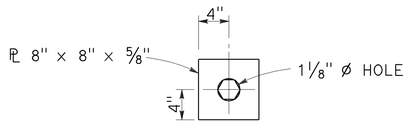

DETAIL "A"
CABLE CONNECTION
END PLATE

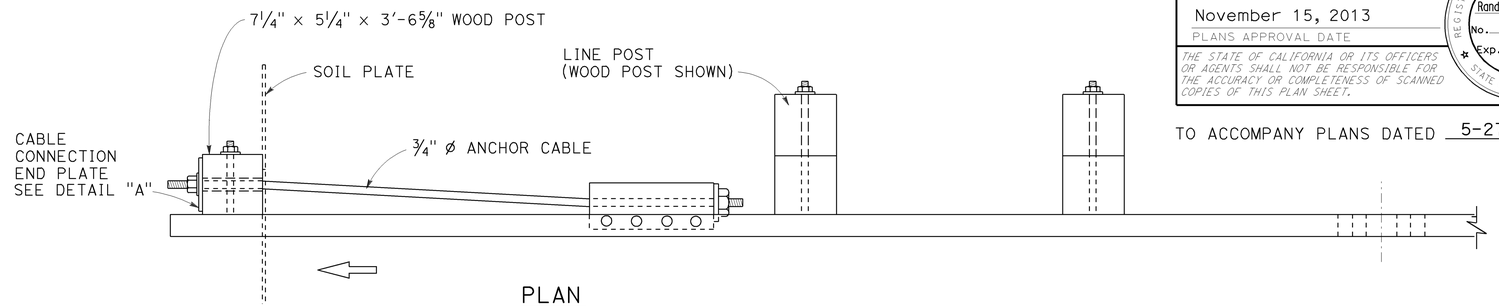

PLAN

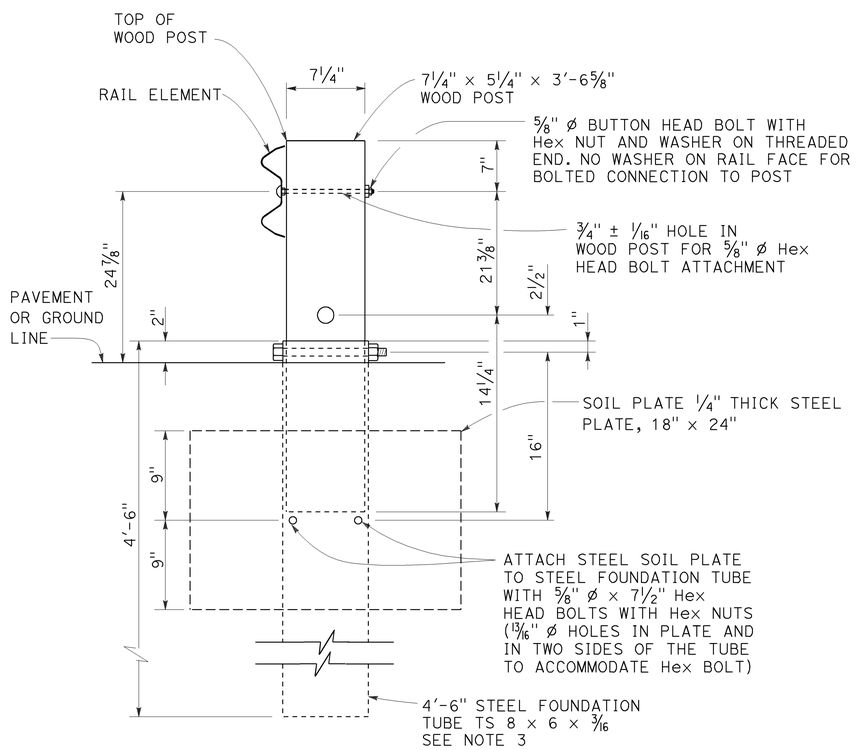

SECTION A-A

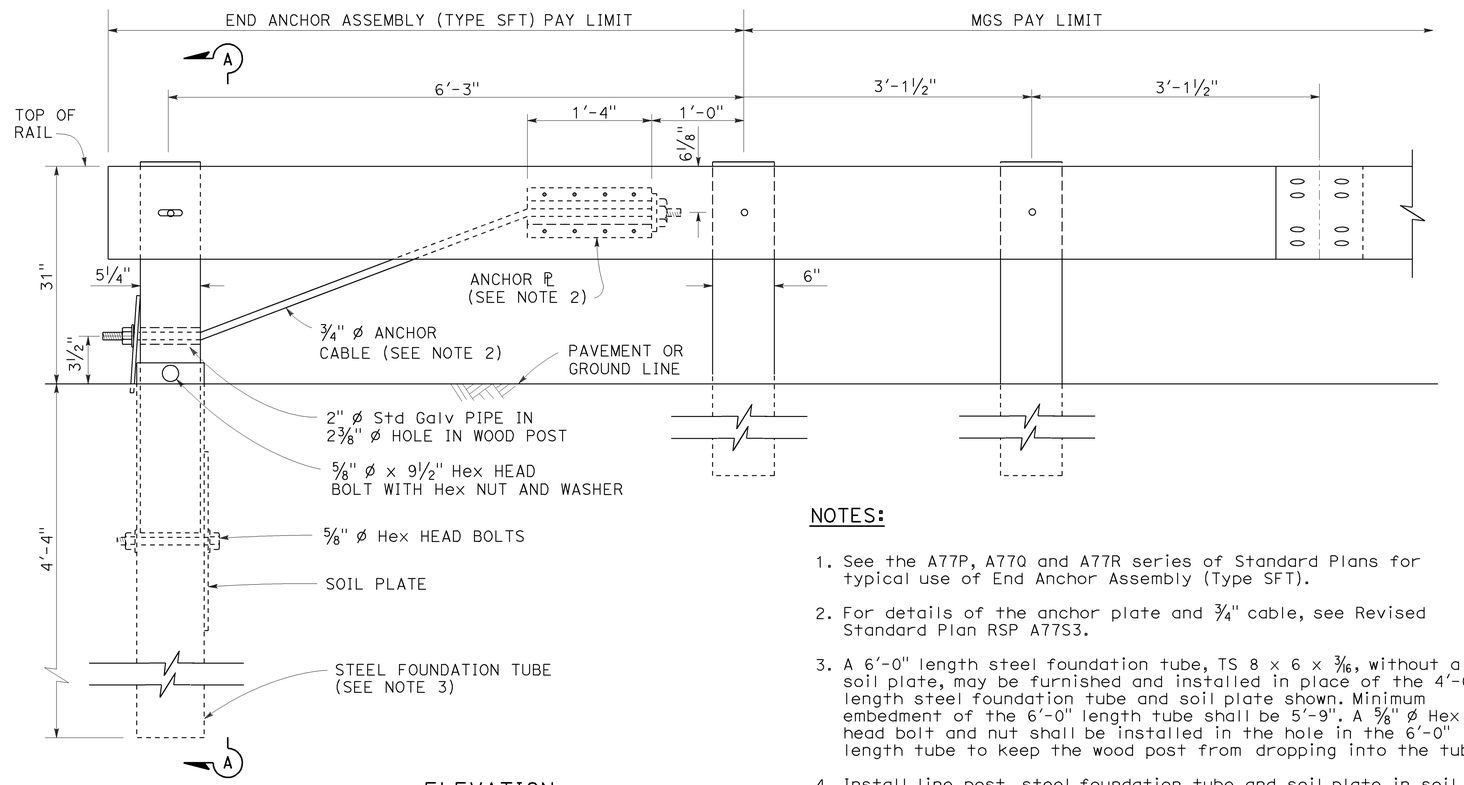

ELEVATION

END ANCHOR
ASSEMBLY (TYPE SFT)
See Note 1

NOTES:

1. See the A77P, A77Q and A77R series of Standard Plans for typical use of End Anchor Assembly (Type SFT).
2. For details of the anchor plate and 3/4" cable, see Revised Standard Plan RSP A77S3.
3. A 6'-0" length steel foundation tube, TS 8 x 6 x 3/16, without a soil plate, may be furnished and installed in place of the 4'-6" length steel foundation tube and soil plate shown. Minimum embedment of the 6'-0" length tube shall be 5'-9". A 5/8" ø Hex head bolt and nut shall be installed in the hole in the 6'-0" length tube to keep the wood post from dropping into the tube.
4. Install line post, steel foundation tube and soil plate in soil.

STATE OF CALIFORNIA
DEPARTMENT OF TRANSPORTATION

MIDWEST GUARDRAIL SYSTEM END ANCHOR ASSEMBLY (TYPE SFT)

NO SCALE

RSP A77S1 DATED NOVEMBER 15, 2013 SUPERSEDES RSP A77S1 DATED JULY 19, 2013 THAT SUPPLEMENTS THE STANDARD PLANS BOOK DATED 2010.

REVISED STANDARD PLAN RSP A77S1

2010 REVISED STANDARD PLAN RSP A77S1

10-4-13

Dist	COUNTY	ROUTE	POST MILES TOTAL PROJECT	SHEET No.	TOTAL SHEETS
01	Lak	20	13.5/31.4	61	73

Randell D. Hiatt
REGISTERED CIVIL ENGINEER

November 15, 2013
PLANS APPROVAL DATE

REGISTERED PROFESSIONAL ENGINEER
Randell D. Hiatt
No. C50200
Exp. 6-30-15
CIVIL
STATE OF CALIFORNIA

THE STATE OF CALIFORNIA OR ITS OFFICERS OR AGENTS SHALL NOT BE RESPONSIBLE FOR THE ACCURACY OR COMPLETENESS OF SCANNED COPIES OF THIS PLAN SHEET.

TO ACCOMPANY PLANS DATED 5-27-14

NOTE:

See Revised Standard Plans RSP A77S1, RSP A77S2 and RSP A77T1 for typical use of anchor cable and anchor plate.

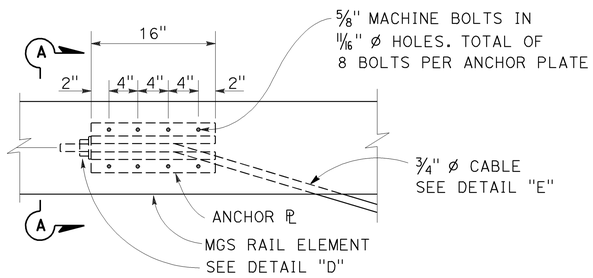

ANCHOR PLATE DETAIL

(MGS shown, TBB similar)

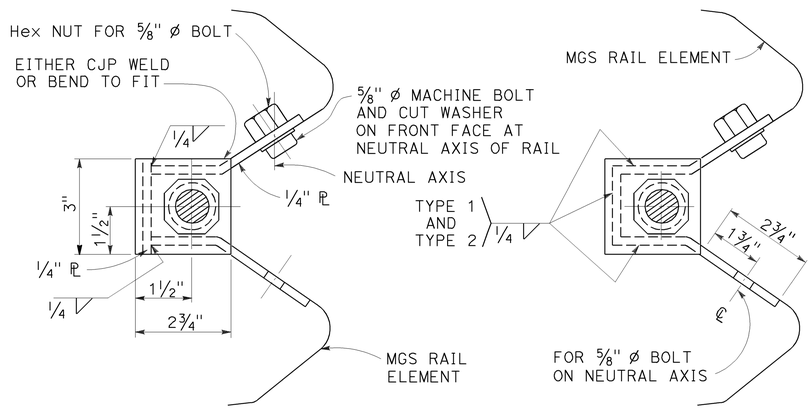

NOTE:

Dimensioning applies to both types.

SECTION A-A
(ALTERNATIVE TYPE 1)

SECTION A-A
(ALTERNATIVE TYPE 2)

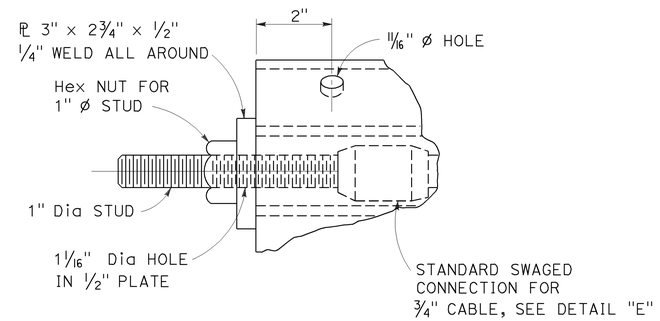

DETAIL "D"

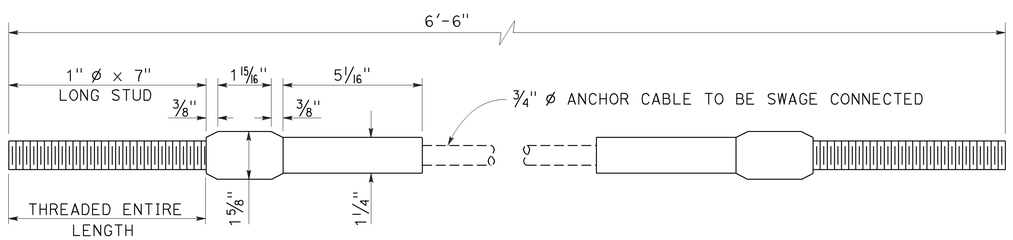

ANCHOR CABLE WITH SWAGED FITTING AND STUD

DETAIL "E"

STATE OF CALIFORNIA
DEPARTMENT OF TRANSPORTATION

METAL RAILING ANCHOR CABLE AND ANCHOR PLATE DETAILS

NO SCALE

RSP A77S3 DATED NOVEMBER 15, 2013 SUPERSEDES RSP A77S3 DATED JULY 19, 2013 THAT SUPPLEMENTS THE STANDARD PLANS BOOK DATED 2010.

REVISED STANDARD PLAN RSP A77S3

2010 REVISED STANDARD PLAN RSP A77S3

10-4-13

Dist	COUNTY	ROUTE	POST MILES TOTAL PROJECT	SHEET No.	TOTAL SHEETS
01	Lak	20	13.5/31.4	62	73

Randell D. Hiatt
REGISTERED CIVIL ENGINEER

July 19, 2013
PLANS APPROVAL DATE

REGISTERED PROFESSIONAL ENGINEER
Randell D. Hiatt
No. C50200
Exp. 6-30-15
CIVIL
STATE OF CALIFORNIA

THE STATE OF CALIFORNIA OR ITS OFFICERS OR AGENTS SHALL NOT BE RESPONSIBLE FOR THE ACCURACY OR COMPLETENESS OF SCANNED COPIES OF THIS PLAN SHEET.

TO ACCOMPANY PLANS DATED 5-27-14

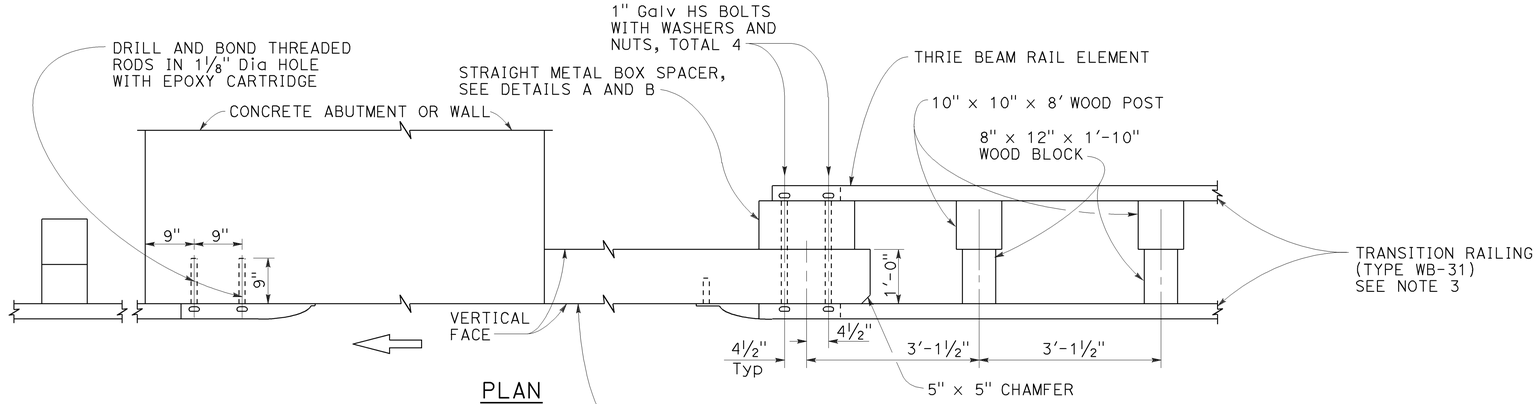

PLAN

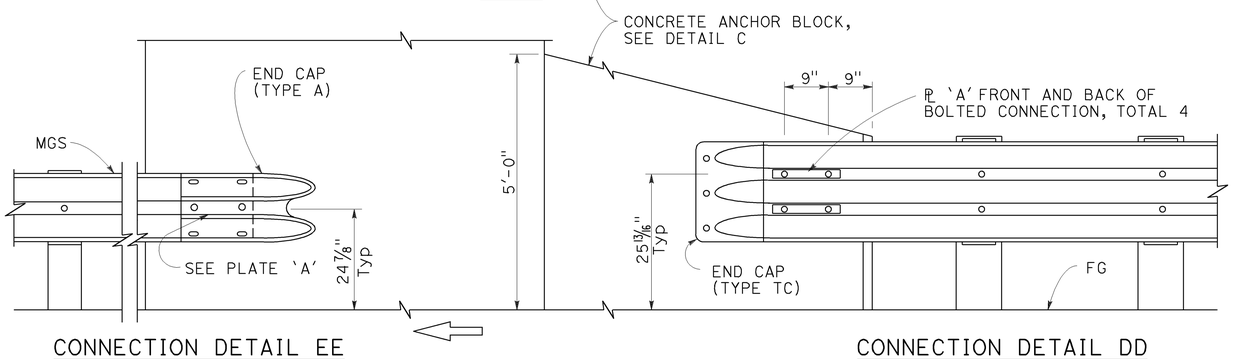

CONNECTION DETAIL EE
See Note 5

ELEVATION

CONNECTION DETAIL DD
See Note 4

MIDWEST GUARDRAIL SYSTEM CONNECTION TO ABUTMENT OR WALL

NOTES:

1. These connection details apply to abutments and walls.
2. Additional details of posts, blocks and hardware are shown on Revised Standard Plans RSP A77M1, RSP A77N1 and RSP A77N2.
3. For additional details of Transition Railing (Type WB-31), see Revised Standard Plan RSP A77U4. Transition Railing (Type WB-31) transitions the 12 gauge MGS railing section to a heavier gage nested thrie beam railingsection which is connected to the concrete anchor block.
4. For typical use of Connection Details DD, see Layout Types 12A and 12B on Revised Standard Plan RSP A77Q1 and Layout Types 12C and 12D on Revised Standard Plan RSP A77Q2.
5. For typical use of Connection Detail EE, see Layout Type 12D on Revised Standard Plan RSP A77Q2 and Layout Type 12DD on Revised Standard Plan RSP A77Q5.

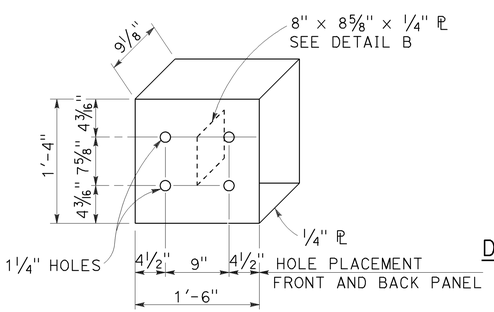

DETAIL A

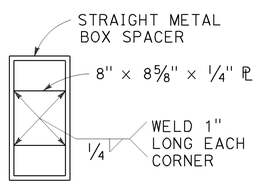

DETAIL B

STRAIGHT METAL BOX SPACER

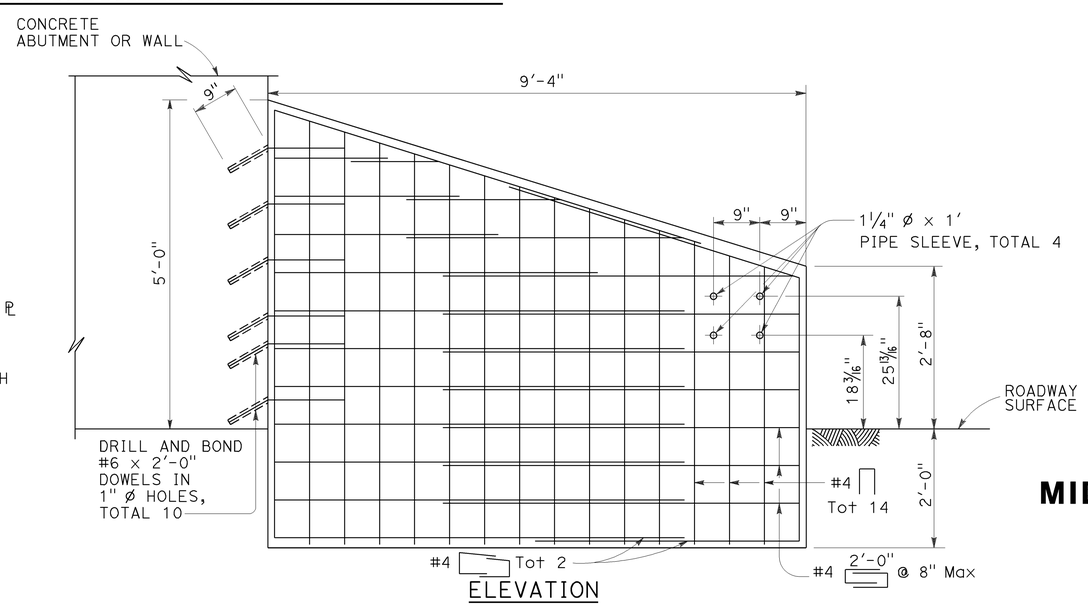

ELEVATION

ANCHOR BLOCK FOR TRANSITION RAILING CONNECTION

DETAIL C

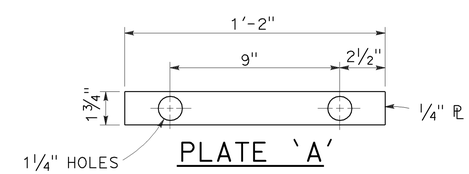

PLATE 'A'

STATE OF CALIFORNIA
DEPARTMENT OF TRANSPORTATION

MIDWEST GUARDRAIL SYSTEM CONNECTIONS TO ABUTMENTS AND WALLS

NO SCALE

RSP A77U3 DATED JULY 19, 2013 SUPPLEMENTS THE STANDARD PLANS BOOK DATED 2010.

REVISED STANDARD PLAN RSP A77U3

2010 REVISED STANDARD PLAN RSP A77U3

7-8-13

Dist	COUNTY	ROUTE	POST MILES TOTAL PROJECT	SHEET No.	TOTAL SHEETS
01	Lak	20	13.5/31.4	63	73

Randell D. Hiatt
REGISTERED CIVIL ENGINEER

November 15, 2013
PLANS APPROVAL DATE

REGISTERED PROFESSIONAL ENGINEER
Randell D. Hiatt
No. C50200
Exp. 6-30-15
CIVIL
STATE OF CALIFORNIA

THE STATE OF CALIFORNIA OR ITS OFFICERS OR AGENTS SHALL NOT BE RESPONSIBLE FOR THE ACCURACY OR COMPLETENESS OF SCANNED COPIES OF THIS PLAN SHEET.

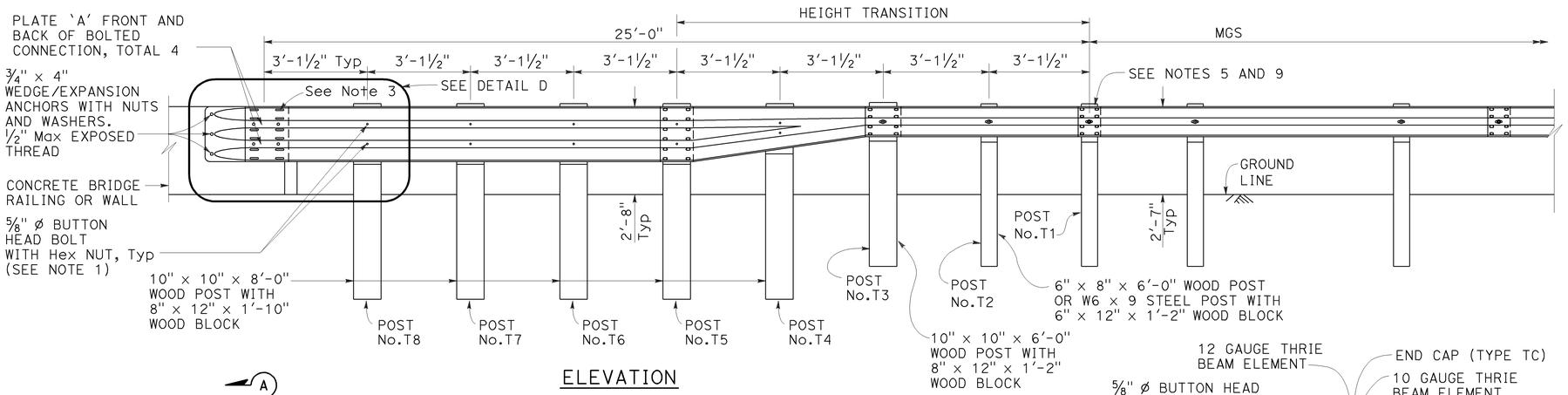

ELEVATION

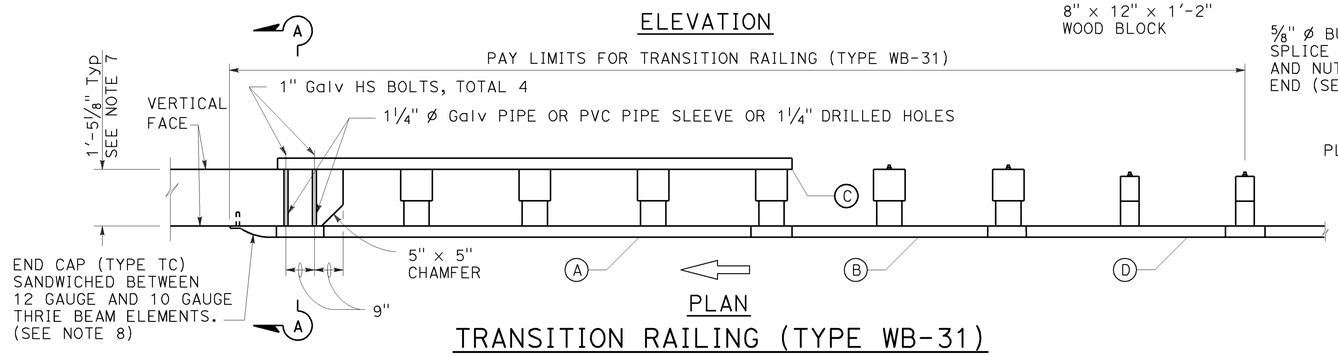

PLAN

TRANSITION RAILING (TYPE WB-31)

(No Blockout Attachment)

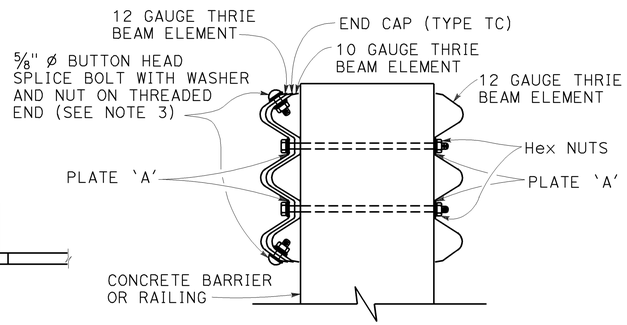

SECTION A-A

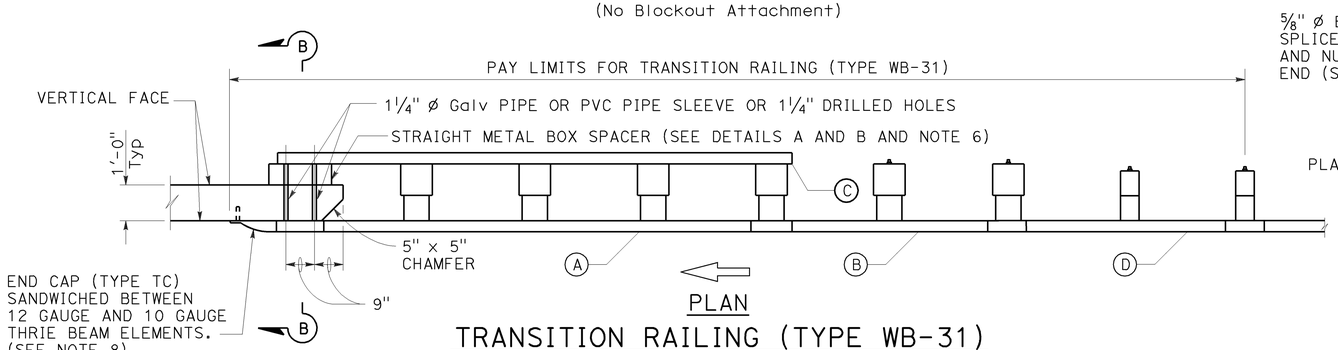

PLAN

TRANSITION RAILING (TYPE WB-31)

(Blockout Attachment)

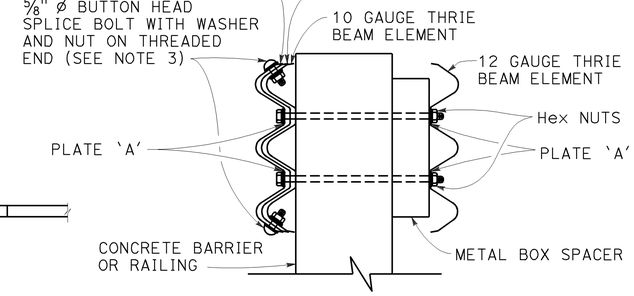

SECTION B-B

NOTES:

TO ACCOMPANY PLANS DATED 5-27-14

1. Use 5/8" ø Button head bolts and hex nuts for connections to posts. No washer on rail face for bolted connections to post.
2. The nested rail elements, end cap, and 'W' beam to thrie beam element may be spliced together prior to bolting the elements to the wood post and concrete barrier or railing.
3. Exterior splice bolt holes for rail element splices at Post No. T5 and the connection to the concrete barrier or railing shall be the standard 29/32" x 1 1/8" slot size. Interior splice bolt holes at these locations may be increased up to 1 1/4" ø. Only the top 4 and the bottom 4 splice bolts with washers and nuts are required for rail splices at Post No. T5 and the connection to the concrete barrier or railing.
4. The top elevation of Posts No. T2 through No. T7 shall not project more than 1" above the top elevation of the rail element.
5. Typically, the railing connected to Transition Railing (Type WB-31) will be either standard railing section of MGS with height transition ratio of 150:1 or a Caltrans approved 31" end treatment attached to Post No. T1.
6. The depth of the metal box spacer varies from the 9 1/8" to 1 1/2" and is dependent on the width of the concrete railing or wall. The combined dimension for the depth of the metal box spacer plus the width of railing or wall is typically 21 1/8". Where the space between the backside of the concrete railing or wall and the rear thrie beam element is less than 1 1/2", metal plates similar to Plate 'A' are to be used as spacers.
7. Where the width of the concrete railing or wall is greater than 17 1/8", wood blocks are to be used to fill the space created between the backside of Posts No. T5 through No. T8 and the rear thrie beam element. These wood blocks shall be 8" in width and 1'-2" in length. The dimension between the front thrie beam element and the rear thrie beam element is to match the width of the concrete railing or wall.
8. End cap may be installed over 12 gauge and 10 gauge thrie beam elements where transition railing is installed on the departure end of bridge railing.
9. Conform standard railing section height to 31" at Post No. T1 using height transition ratio of 150:1.

LEGEND:

(A) NESTED THRIE BEAM ELEMENTS (ONE 12 GAUGE ELEMENT NESTED OVER ONE 10 GAUGE ELEMENT).

(B) ONE ASYMMETRICAL 10 GAUGE "W" BEAM TO THRIE BEAM ELEMENT.

(C) ONE 12 GAUGE THRIE BEAM ELEMENT.

(D) ONE 10 GAUGE "W" BEAM RAIL ELEMENT (7'-3 1/2" LENGTH)

10 GAUGE = 0.138" THICK
12 GAUGE = 0.108" THICK

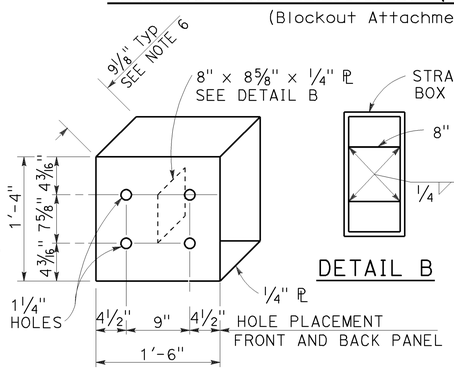

DETAIL A

STRAIGHT METAL BOX SPACER

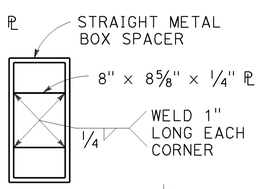

DETAIL B

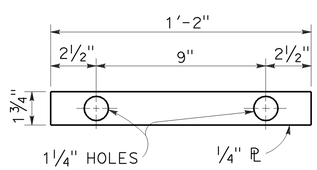

DETAIL C

PLATE 'A'

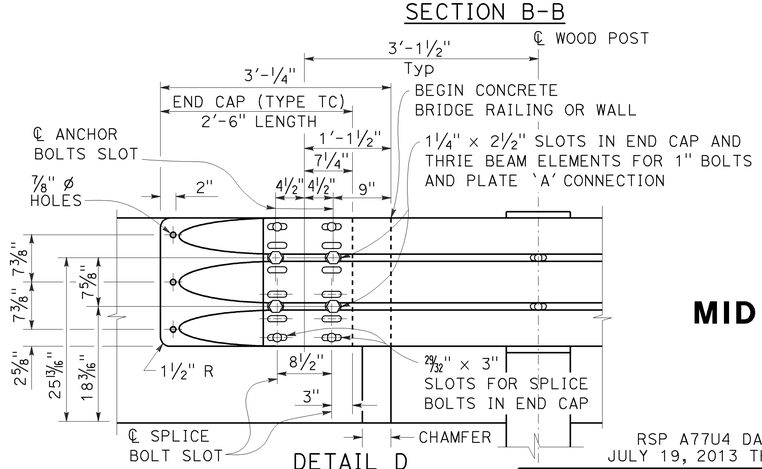

DETAIL D

STATE OF CALIFORNIA
DEPARTMENT OF TRANSPORTATION

MIDWEST GUARDRAIL SYSTEM TRANSITION RAILING (TYPE WB-31)

NO SCALE

RSP A77U4 DATED NOVEMBER 15, 2013 SUPERSEDES RSP A77U4 DATED JULY 19, 2013 THAT SUPPLEMENTS THE STANDARD PLANS BOOK DATED 2010.

REVISED STANDARD PLAN RSP A77U4

2010 REVISED STANDARD PLAN RSP A77U4

10-4-13

Dist	COUNTY	ROUTE	POST MILES TOTAL PROJECT	SHEET No.	TOTAL SHEETS
01	Lak	20	13.5/31.4	64	73

Randell D. Hiatt
REGISTERED CIVIL ENGINEER

July 19, 2013
PLANS APPROVAL DATE

REGISTERED PROFESSIONAL ENGINEER
Randell D. Hiatt
No. C50200
Exp. 6-30-15
CIVIL
STATE OF CALIFORNIA

THE STATE OF CALIFORNIA OR ITS OFFICERS OR AGENTS SHALL NOT BE RESPONSIBLE FOR THE ACCURACY OR COMPLETENESS OF SCANNED COPIES OF THIS PLAN SHEET.

TO ACCOMPANY PLANS DATED 5-27-14

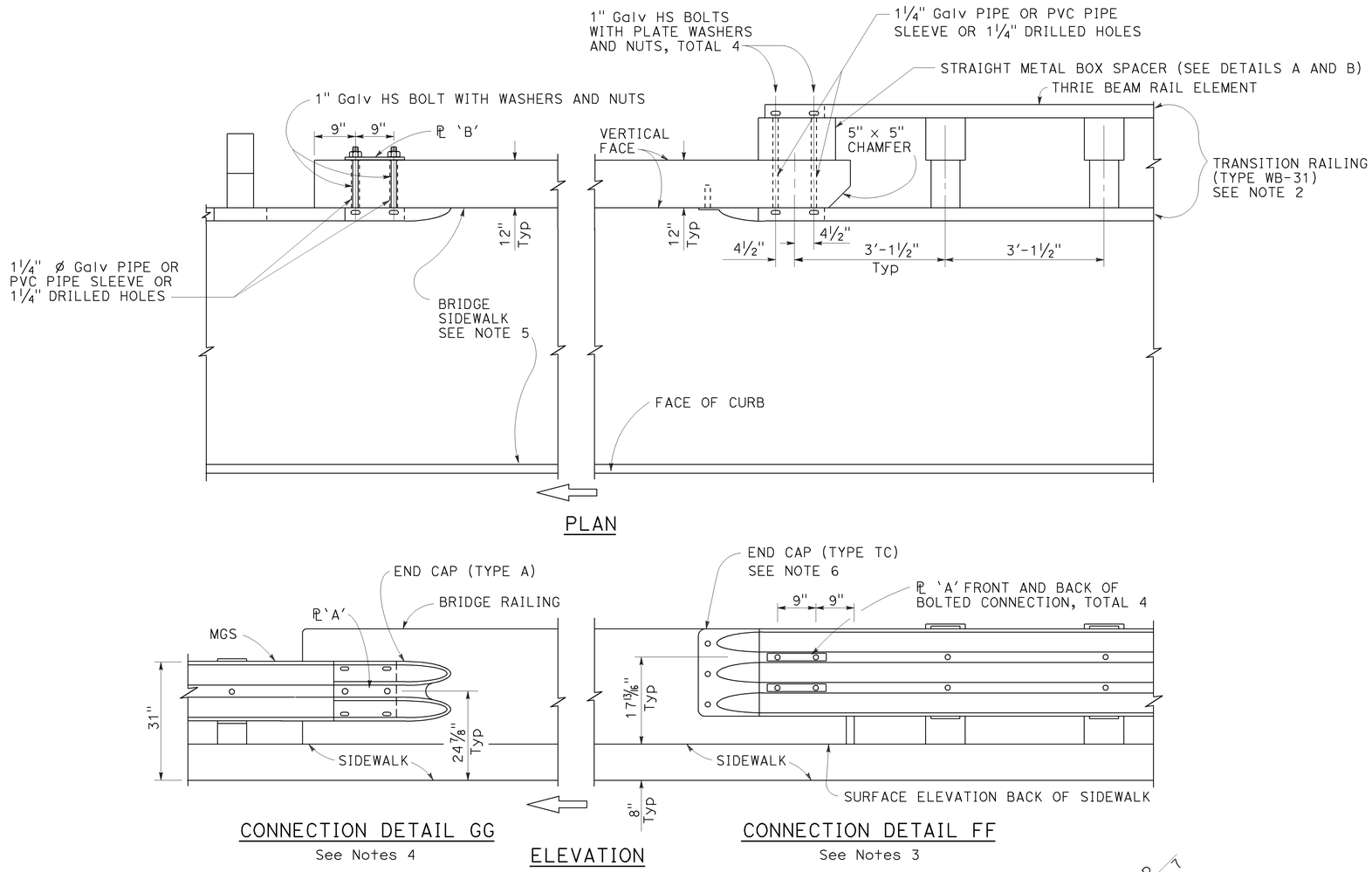

MIDWEST GUARDRAIL SYSTEM CONNECTION TO BRIDGE RAILING WITH SIDEWALKS

NOTES:

1. See Revised Standard Plan RSP A77V2 for additional connection details to bridges with sidewalks.
2. For additional details of Transition Railing (Type WB-31), see Revised Standard Plan RSP A77U4. Transition Railing (Type WB-31) transitions the 12 gauge MGS railing section to a heavier gage nested thrie beam railing section which is connected to the concrete bridge railing.
3. For typical use of Connection Detail FF, see Layout Types 12A and 12B on Revised Standard Plan RSP A77Q1.
4. For typical use of Connection Detail GG, see Layout Type 12D on Revised Standard Plan RSP A77Q2 and Layout Type 12DD on Revised Standard Plan RSP A77Q5.
5. Where the bridge sidewalk is not continued beyond the end of the bridge railing, the portion of the sidewalk beyond each end of the bridge railing shall be transitioned down from the top elevation of the sidewalk, for its entire width, to the finished grade of the adjacent roadbed. The longitudinal slope of each sidewalk elevation transition shall not exceed 8.33 percent.
6. For details of End Cap (Type TC), see Revised Standard Plan RSP A77U4.
7. See Revised Standard Plan RSP A77U4 for additional details regarding depth dimension for straight metal box spacer.

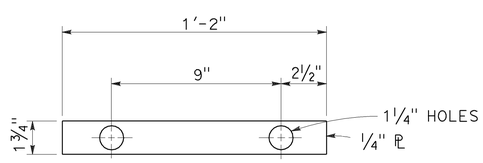

PLATE 'A'

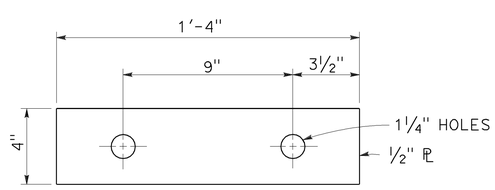

PLATE 'B'
(For backside of connection SB)

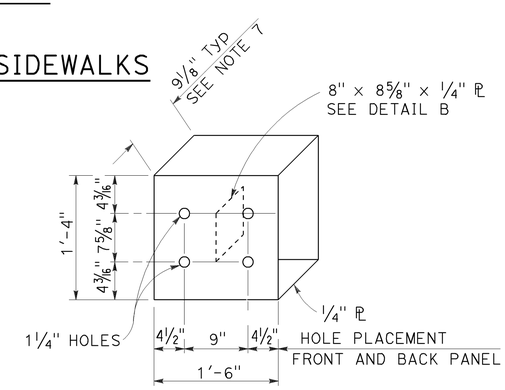

DETAIL A

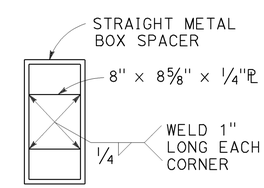

DETAIL B

STRAIGHT METAL BOX SPACER

STATE OF CALIFORNIA
DEPARTMENT OF TRANSPORTATION

MIDWEST GUARDRAIL SYSTEM CONNECTIONS TO BRIDGE RAILINGS WITH SIDEWALKS DETAILS No. 1

NO SCALE

RSP A77V1 DATED JULY 19, 2013 SUPPLEMENTS THE STANDARD PLANS BOOK DATED 2010.

REVISED STANDARD PLAN RSP A77V1

2010 REVISED STANDARD PLAN RSP A77V1

7-8-13

Dist	COUNTY	ROUTE	POST MILES TOTAL PROJECT	SHEET No.	TOTAL SHEETS
01	Lak	20	13.5/31.4	65	73

Randell D. Hiatt
REGISTERED CIVIL ENGINEER

July 19, 2013
PLANS APPROVAL DATE

REGISTERED PROFESSIONAL ENGINEER
Randell D. Hiatt
No. C50200
Exp. 6-30-15
CIVIL
STATE OF CALIFORNIA

THE STATE OF CALIFORNIA OR ITS OFFICERS OR AGENTS SHALL NOT BE RESPONSIBLE FOR THE ACCURACY OR COMPLETENESS OF SCANNED COPIES OF THIS PLAN SHEET.

TO ACCOMPANY PLANS DATED 5-27-14

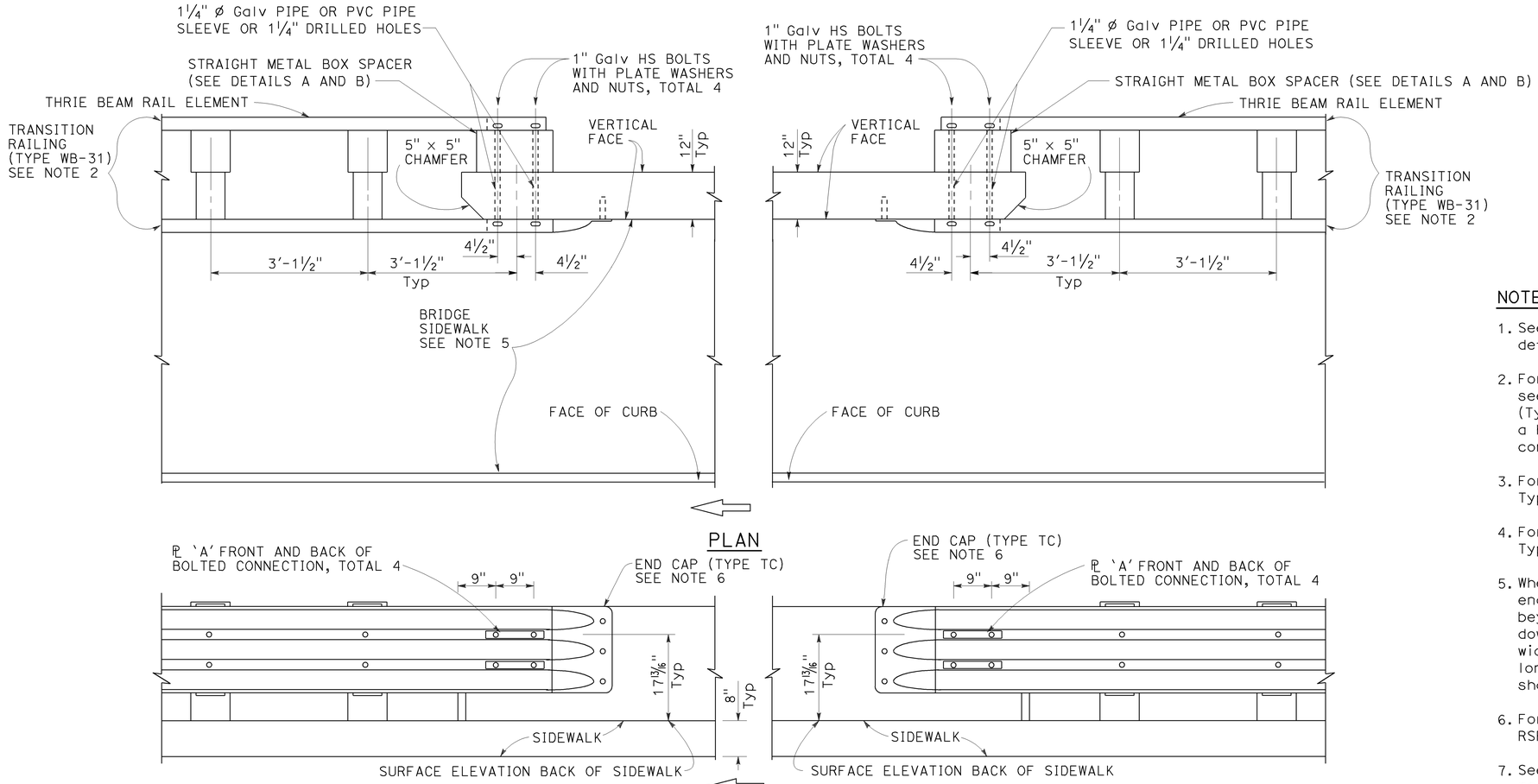

MIDWEST GUARDRAIL SYSTEM CONNECTION TO BRIDGE RAILING WITH SIDEWALKS

NOTES:

1. See Revised Standard Plan RSP A77V1 for additional connection details to bridges with sidewalks.
2. For additional details of Transition Railing (Type WB-31), see Revised Standard Plan RSP A77U4. Transition Railing (Type WB-31) transitions the 12 gauge MGS railing section to a heavier gage nested thrie beam railing section which is connected to the concrete bridge railing.
3. For typical use of Connection Detail FF, see Layout Types 12A and 12B on Revised Standard Plan RSP A77Q1.
4. For typical use of Connection Detail HH, see Layout Types 12AA and 12BB on Revised Standard Plan RSP A77Q4.
5. Where the bridge sidewalk is not continued beyond the end of the bridge railing, the portion of the sidewalk beyond each end of the bridge railing shall be transitioned down from the top elevation of the sidewalk, for its entire width, to the finished grade of the adjacent roadbed. The longitudinal slope of each sidewalk elevation transition shall not exceed 8.33 percent.
6. For details of End Cap (Type TC), see Revised Standard Plan RSP A77U4.
7. See Revised Standard Plan RSP A77U4 for additional details regarding depth dimension for straight metal box spacer.

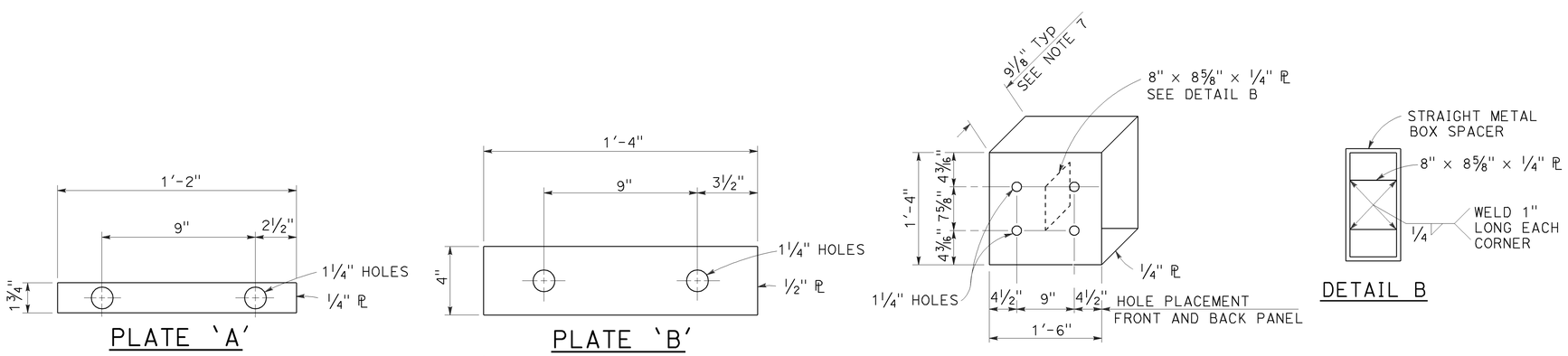

STRAIGHT METAL BOX SPACER

STATE OF CALIFORNIA
DEPARTMENT OF TRANSPORTATION

MIDWEST GUARDRAIL SYSTEM CONNECTIONS TO BRIDGE RAILINGS WITH SIDEWALKS DETAILS No. 2

NO SCALE

RSP A77V2 DATED JULY 19, 2013 SUPPLEMENTS THE STANDARD PLANS BOOK DATED 2010.

REVISED STANDARD PLAN RSP A77V2

2010 REVISED STANDARD PLAN RSP A77V2

6-20-13

Dist	COUNTY	ROUTE	POST MILES TOTAL PROJECT	SHEET No.	TOTAL SHEETS
01	Lak	20	13.5/31.4	66	73

REGISTERED CIVIL ENGINEER

July 19, 2013
PLANS APPROVAL DATE

REGISTERED PROFESSIONAL ENGINEER
Michael Janzen
No. 44788
Exp. 03-31-14
CIVIL
STATE OF CALIFORNIA

THE STATE OF CALIFORNIA OR ITS OFFICERS OR AGENTS SHALL NOT BE RESPONSIBLE FOR THE ACCURACY OR COMPLETENESS OF SCANNED COPIES OF THIS PLAN SHEET.

TO ACCOMPANY PLANS DATED 5-27-14

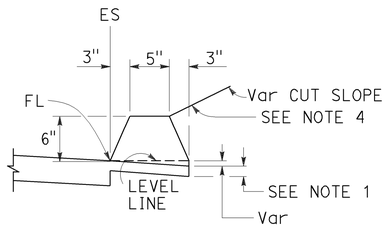

TYPE A
See Note 3

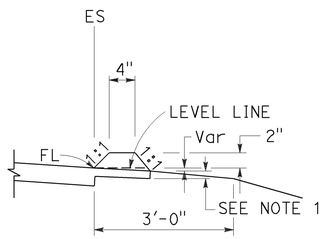

TYPE C

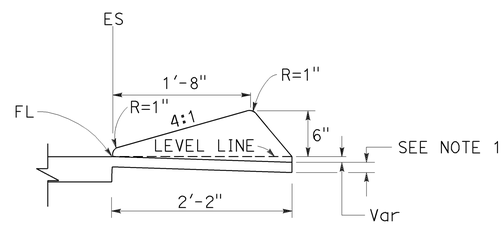

TYPE D

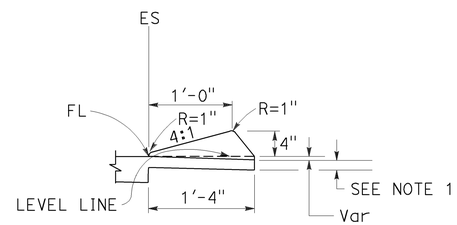

TYPE E

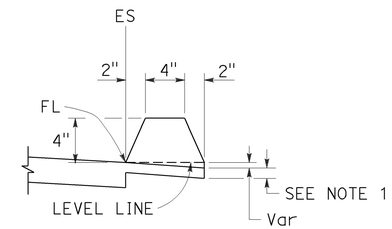

TYPE F
See Note 5

DIKES

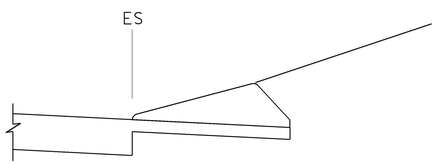

CASE C-1
Cut Slope

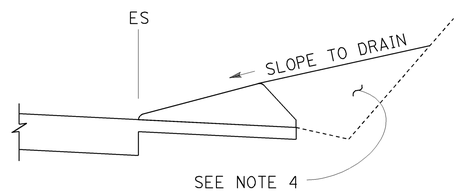

CASE C-2
Cut Slope

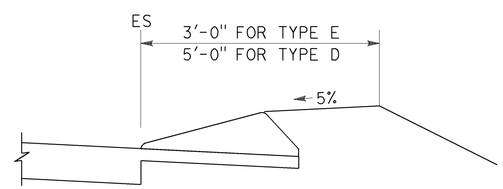

CASE F

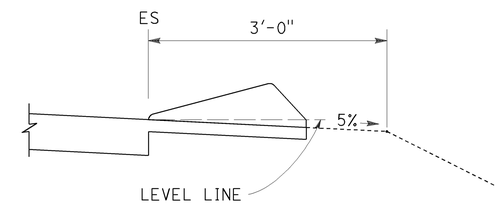

CASE R
See Note 2

TYPE D AND E BACKFILL DETAILS

NOTES:

1. For HMA shoulders only, extend top layer of HMA placed on the shoulder under dike with no joint at the ES. For projects with OGFC shoulders, do not extend OGFC under dike. See project plans for modified dike detail.
2. Case R applies to retrofit only projects where restrictive conditions do not provide enough width for Case F backfill.
3. Type A dike only to be used where restrictive slope conditions do not provide enough width to use Type D or Type E dike.
4. Fill and compact with excavated material to top of dike.
5. Use Type F dike, where dike is required with guard railing installations. See Revised Standard Plan RSP A77N4 for dike positioning details.

DIKE QUANTITIES

TYPE	CUBIC YARDS PER LINEAR FOOT
A	0.0135
C	0.0038
D	0.0293
E	0.0130
F	0.0066

Quantities based on 5% cross slope.

STATE OF CALIFORNIA
DEPARTMENT OF TRANSPORTATION

HOT MIX ASPHALT DIKES

NO SCALE

RSP A87B DATED JULY 19, 2013 SUPERSEDES STANDARD PLAN A87B
DATED MAY 20, 2011 - PAGE 120 OF THE STANDARD PLANS BOOK DATED 2010.

REVISED STANDARD PLAN RSP A87B

2010 REVISED STANDARD PLAN RSP A87B

6-27-13

DIST	COUNTY	ROUTE	POST MILES TOTAL PROJECT	SHEET No.	TOTAL SHEETS
01	Lak	20	13.5/31.4	67	73

REGISTERED CIVIL ENGINEER

November 15, 2013
PLANS APPROVAL DATE

REGISTERED PROFESSIONAL ENGINEER Cornelis M. Hakim No. C55610 Exp. 12-31-14 CIVIL STATE OF CALIFORNIA

THE STATE OF CALIFORNIA OR ITS OFFICERS OR AGENTS SHALL NOT BE RESPONSIBLE FOR THE ACCURACY OR COMPLETENESS OF SCANNED COPIES OF THIS PLAN SHEET.

TO ACCOMPANY PLANS DATED 5-27-14

2010 REVISED STANDARD PLAN RSP P74

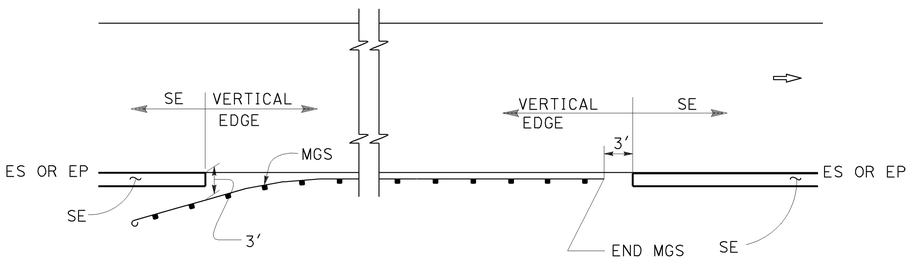

MGS

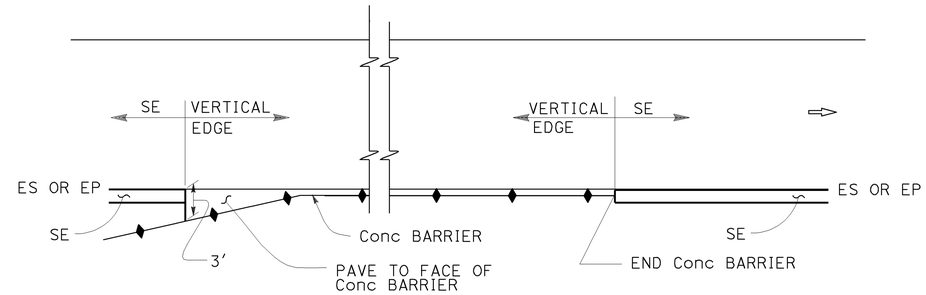

CONCRETE BARRIER

ABBREVIATIONS:

SE SAFETY EDGE

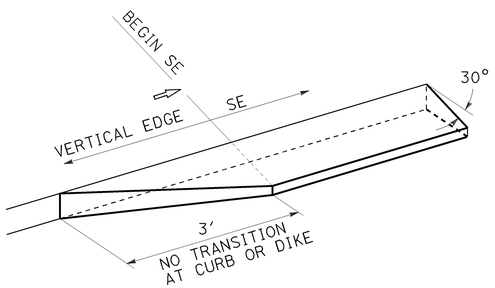

TRANSITION DETAIL FOR CONCRETE ONLY

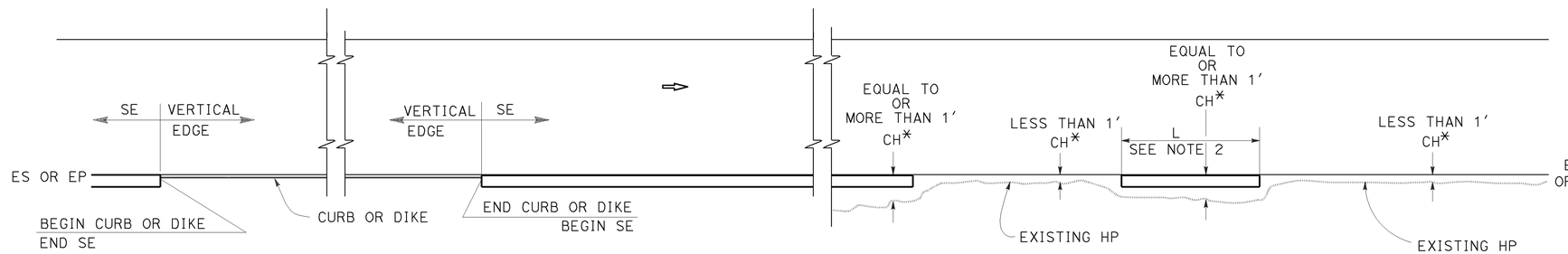

CURB OR DIKE

NARROW SIDE SLOPE

* CH = Distance from ES or EP to existing HP.

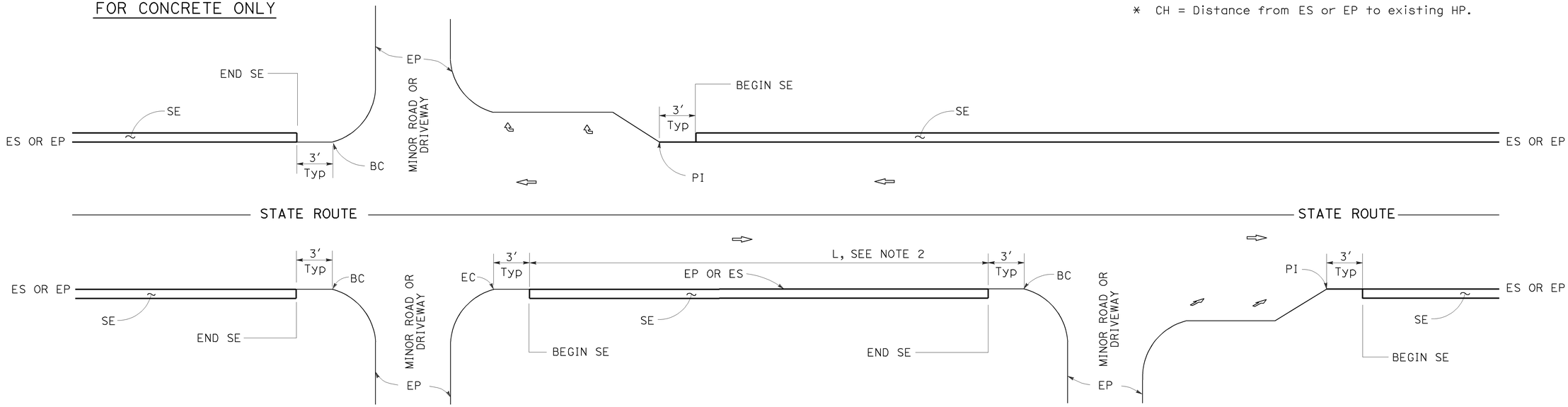

INTERSECTION

MINOR ROADWAY OR DRIVEWAY

DRIVEWAY AND INTERSECTION

STATE OF CALIFORNIA
DEPARTMENT OF TRANSPORTATION

PAVEMENT EDGE TREATMENTS

NO SCALE

RSP P74 DATED NOVEMBER 15, 2013 SUPERSEDES RSP P74 DATED JANUARY 20, 2012 THAT SUPPLEMENTS THE STANDARD PLANS BOOK DATED 2010.

REVISED STANDARD PLAN RSP P74

NOTES:

1. For details not shown, see Revised Standard Plans RSP P75 and RSP P76.
2. Safety edge is optional when L is less than 30′.

10-11-13

DIST	COUNTY	ROUTE	POST MILES TOTAL PROJECT	SHEET No.	TOTAL SHEETS
01	Lak	20	13.5/31.4	68	73

REGISTERED CIVIL ENGINEER

November 15, 2013
PLANS APPROVAL DATE

REGISTERED PROFESSIONAL ENGINEER Cornelis M. Hakim No. C55610 Exp. 12-31-14 CIVIL STATE OF CALIFORNIA

THE STATE OF CALIFORNIA OR ITS OFFICERS OR AGENTS SHALL NOT BE RESPONSIBLE FOR THE ACCURACY OR COMPLETENESS OF SCANNED COPIES OF THIS PLAN SHEET.

TO ACCOMPANY PLANS DATED 5-27-14

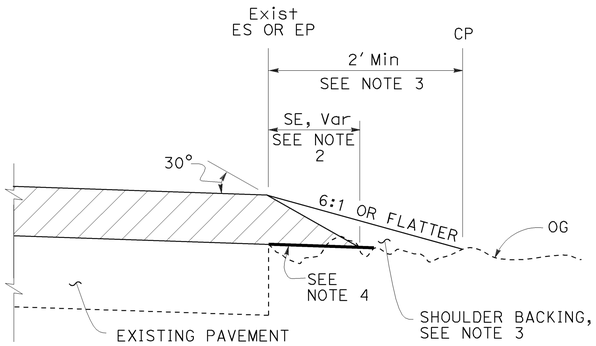

CASE A
Safety Edge

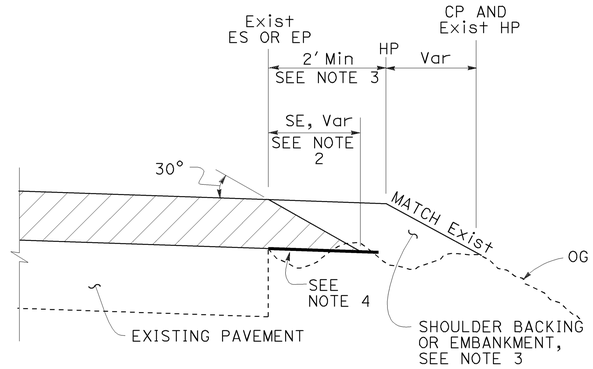

CASE B
Safety Edge

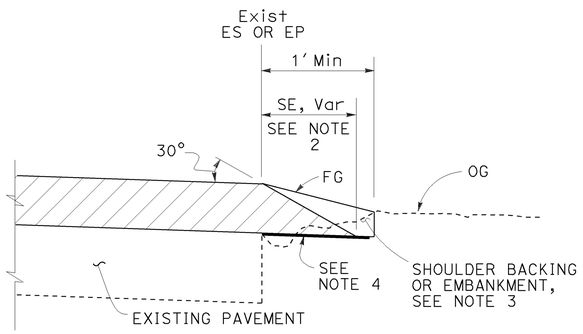

CASE C
Safety Edge

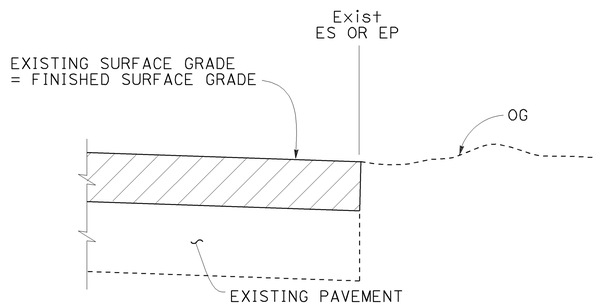

CASE D
Vertical Edge

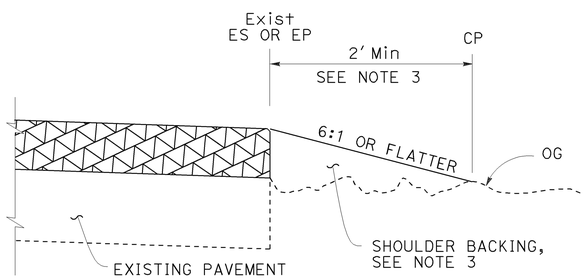

CASE E
Vertical Edge

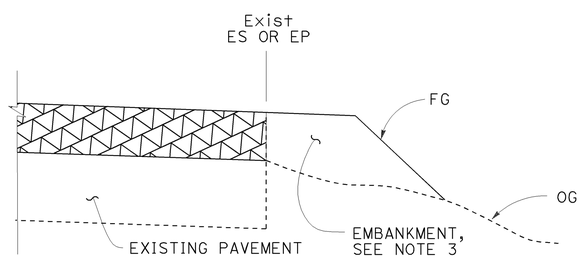

CASE F
Vertical Edge
* See Table A and Revised Std Plan RSP P74

LEGEND:

- HMA OVERLAY
- HMA OR CONCRETE OVERLAY
- CONCRETE OVERLAY

ABBREVIATIONS:

SE SAFETY EDGE
TT TOTAL THICKNESS OF SE

TABLE A
EDGE TREATMENT FOR VARIOUS OVERLAY THICKNESS AND CONDITIONS

	OVERLAY THICKNESS	
FIELD CONDITION	LESS THAN 0.15′	0.15′ OR MORE
Exist SLOPE 6:1 OR FLATTER	CASE E	CASE A
Exist SLOPE 3:1 TO 6:1	CASE E	CASE B
Exist SLOPE STEEPER THAN 3:1	CASE F	CASE F
CUT SECTION (REPLACE, COLD PLANE, MILL PAVEMENT)	CASE D	CASE C

ADDITIONAL HMA OR CONCRETE QUANTITIES FOR SE/SIDE/MILE

TYPICAL CROSS SECTION	TT	TOTAL ADDITIONAL MATERIAL FOR SE/SIDE/MILE		
		HMA (TON)	CONCRETE (CY)*	CONCRETE (CY)**
TT	0.15′	NA	NA	NA
	0.20′	13.7	NA	NA
	0.30′	30.9	NA	NA
	0.40′	54.9	NA	NA
	0.45′	69.4	NA	NA
TT 0.43′	0.50′	84.2	NA	NA
	0.60′	113.9	NA	NA
	0.70′	143.6	70.9	94.2
	0.80′	173.3	85.6	112.2
	0.90′	203.0	100.3	130.2
	1.00′	232.7	114.9	148.2
	1.10′	262.4	129.6	166.2
	1.20′	292.1	144.3	184.2

* For Detail "A"
** For Optional Detail "A"

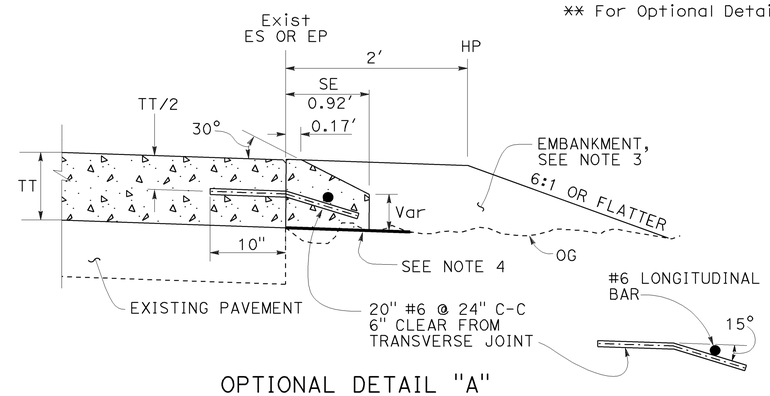

OPTIONAL DETAIL "A"
For concrete overlay
See Note 5

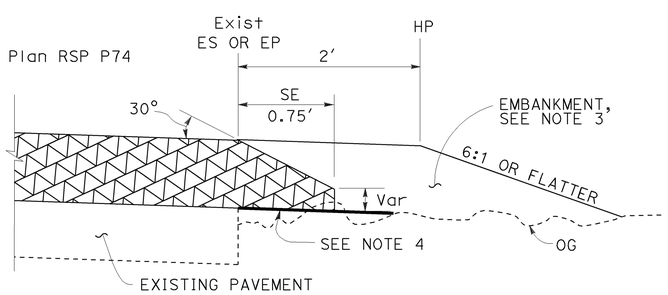

DETAIL "A"
For HMA overlay thickness more than 0.43′ or concrete overlay

NOTES:

1. For limits of safety edge and vertical edge treatments, see Revised Standard Plan RSP P74.
2. Details shown for HMA overlay thickness less than 0.43′. See Detail "A" for HMA overlay thickness more than 0.43′ or concrete overlay.
3. For locations and limits of shoulder backing or embankment see project plans.
4. Grade existing ground to place safety edge. 1′ minimum width
5. Safety edge transverse joint must match overlay transverse joint. End of #6 longitudinal bar must be 2" ±½" clear from transverse joint.
6. Safety edge is not needed in the area of MGS, barrier, right turn lane and acceleration lane. See Revised Standard Plan RSP P74.

STATE OF CALIFORNIA
DEPARTMENT OF TRANSPORTATION

PAVEMENT EDGE TREATMENTS-OVERLAYS

NO SCALE

RSP P75 DATED NOVEMBER 15, 2013 SUPERSEDES RSP P75 DATED JANUARY 20, 2012 THAT SUPPLEMENTS THE STANDARD PLANS BOOK DATED 2010.

REVISED STANDARD PLAN RSP P75

2010 REVISED STANDARD PLAN RSP P75

10-4-13

Dist	COUNTY	ROUTE	POST MILES TOTAL PROJECT	SHEET No.	TOTAL SHEETS
01	Lak	20	13.5/31.4	69	73

Raymond Don Tsztoo
REGISTERED CIVIL ENGINEER

April 19, 2013
PLANS APPROVAL DATE

REGISTERED PROFESSIONAL ENGINEER Raymond Don Tsztoo No. C37332 Exp. 6-30-14 CIVIL STATE OF CALIFORNIA

THE STATE OF CALIFORNIA OR ITS OFFICERS OR AGENTS SHALL NOT BE RESPONSIBLE FOR THE ACCURACY OR COMPLETENESS OF SCANNED COPIES OF THIS PLAN SHEET.

TO ACCOMPANY PLANS DATED 5-27-14

2010 REVISED STANDARD PLAN RSP D77B

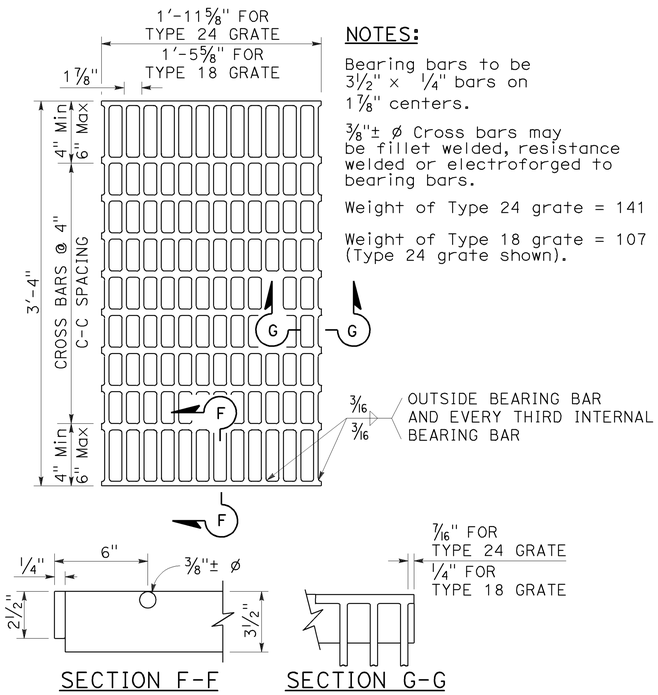

NOTES:

Bearing bars to be 3½" × ¼" bars on 1⅞" centers.

⅜"± ø Cross bars may be fillet welded, resistance welded or electroforged to bearing bars.

Weight of Type 24 grate = 141 LBS.

Weight of Type 18 grate = 107 LBS. (Type 24 grate shown).

TYPE 18-10 AND 24-13 GRATE

(Welded Steel)

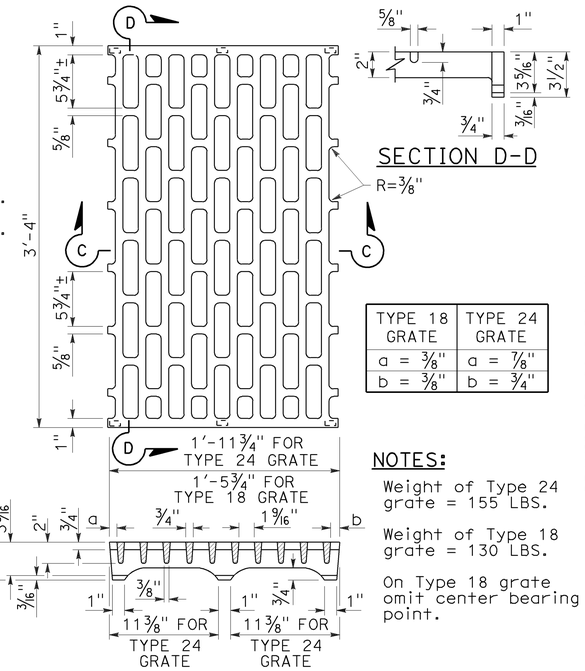

TYPE 18 GRATE	TYPE 24 GRATE
a = ⅜"	a = ⅞"
b = ⅜"	b = ¾"

NOTES:

Weight of Type 24 grate = 155 LBS.

Weight of Type 18 grate = 130 LBS.

On Type 18 grate omit center bearing point.

TYPE 18-8C AND 24-10C GRATE

(Cast ductile iron)

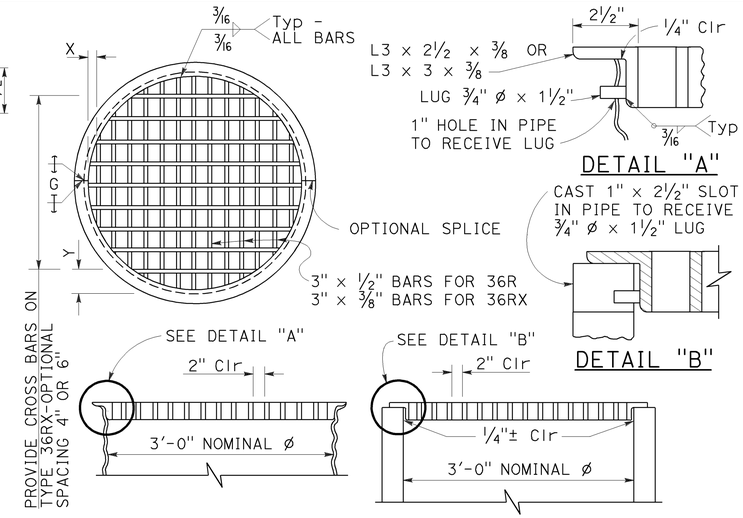

TYPE 36R AND 36RX GRATE DETAILS

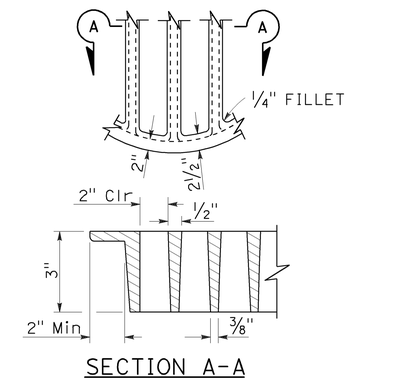

SECTION A-A

ALTERNATIVE CAST DUCTILE IRON GRATE OR CAST CARBON STEEL GRATE TYPE 36R AND 36RX

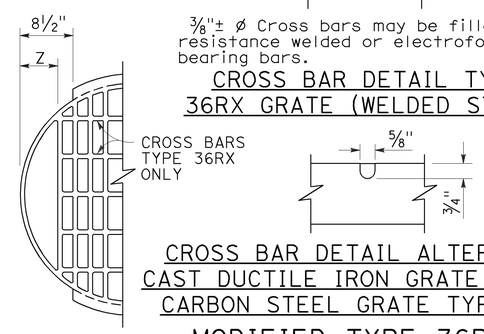

CROSS BAR DETAIL TYPE 36RX GRATE (WELDED STEEL)

CROSS BAR DETAIL ALTERNATIVE CAST DUCTILE IRON GRATE OR CAST CARBON STEEL GRATE TYPE 36RX

MODIFIED TYPE 36R AND 36RX GRATE FOR ODI INLET

BASIS FOR Misc IRON AND STEEL FINAL PAY WEIGHTS FOR DRAINAGE INLETS

INLET TYPE	GRATE TYPE	No. OF GRATES	WEIGHT LB
GDO (SEE NOTE 4)	24-10C	2	391
	24-10S	2	456
	24-12X	2	473
	24-13	2	374
GO,GOL,G1,G2, G3,G4 (TYPE 24)	24-10C	1	202
	24-10S	1	229
	24-12X	1	239
	24-13	1	188
G4 (TYPE 18) G5,G6	18-8S	1	187
	18-9X	1	187
	18-10	1	149
GT1,GT2	18-8S	2	374
	18-9X	2	374
	18-10	2	298
GT3,GT4	24-10C	2	404
	24-10S	2	458
	24-12X	2	478
	24-13	2	376
ODI	36RX (Mod)	1	196
GMP,GCP,GCPI	36RX	1	215
ODI	36R (Mod)	1	220
GMP,GCP,GCPI	36R	1	236
TRASH RACK			22
GRATE CHAIN			3

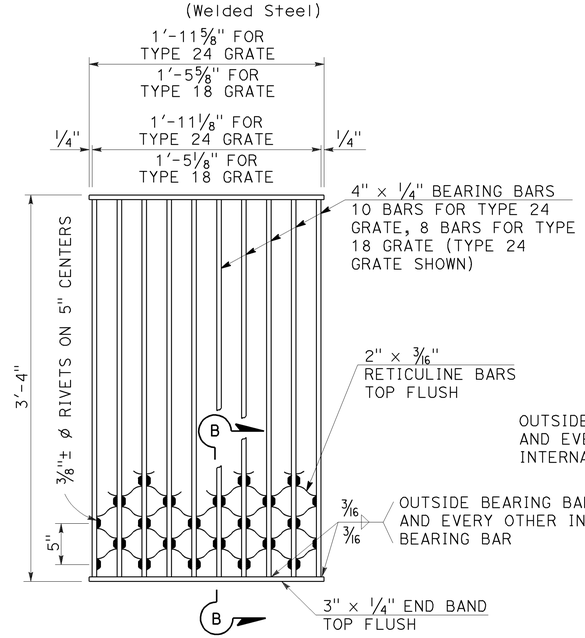

NOTES:

Weight of Type 24 grate = 182 LBS.
Weight of Type 18 grate = 145 LBS.

TYPE 18-8S AND 24-10S GRATE

(Welded Steel) Reticuline type

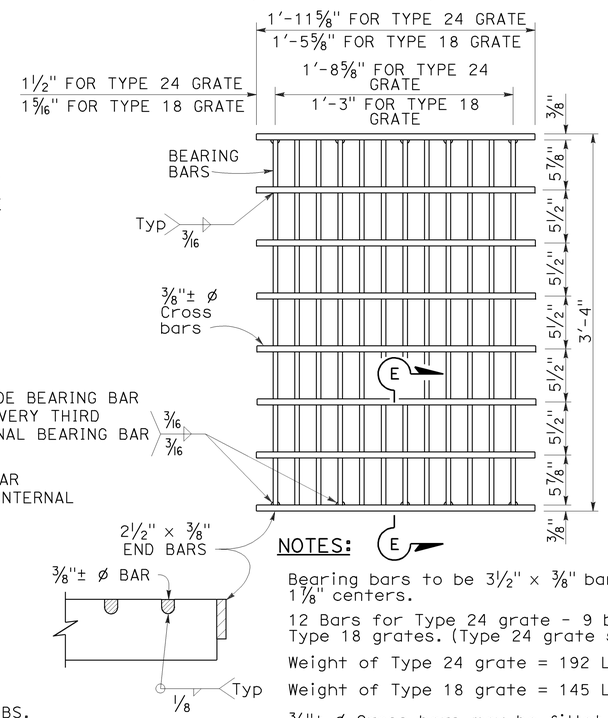

NOTES:

Bearing bars to be 3½" × ⅜" bars on 1⅞" centers.

12 Bars for Type 24 grate - 9 bars for Type 18 grates. (Type 24 grate shown).

Weight of Type 24 grate = 192 LBS.

Weight of Type 18 grate = 145 LBS.

⅜"± ø Cross bars may be fillet welded, resistance welded or electroforged to bearing bars.

TYPE 18-9X AND 24-12X GRATE

(Welded Steel)

NOTES:

1. When alternative grates are allowed - Final pay based on alternative with the lesser weight.
2. Use frame shown on Standard Plan D74A, D74B or RSP D77A as appropriate.
3. When Type 24-10S, 24-12X or 24-13 grates are used with GDO Inlets, a ¼" × 3½" × 3'-4⅞" steel bar shall be welded across the center of inlet frame to separate the individual grates.
4. See Revised Standard Plan RSP D77A for connecting chain to welded grate and frame. When chain is required, do not use cast ductile iron grate.

GRATE BAR SPACING TABLE

TYPE	No. OF BARS	CLEAR BAR SPACING	X	Y 4" SPACING	Y 6" SPACING	Z
36R	13	2"	2⅛"	-	-	-
36RX (STEEL)	15	2"	9/16"	3¾"	5¾"	-
36RX (CAST)	13	2"	2⅛"	3¾"	5¾"	-
36R Mod	12	2"	2⅛"	-	-	5"
36RX Mod (STEEL)	13	2"	9/16"	3¾"	5¾"	5 11/16"
36RX Mod (CAST)	12	2"	2⅛"	3¾"	5¾"	5"

STATE OF CALIFORNIA
DEPARTMENT OF TRANSPORTATION

GRATE DETAILS No. 2

NO SCALE

RSP D77B DATED APRIL 19, 2013 SUPERSEDES RSP D77B DATED JULY 20, 2012 AND STANDARD PLAN D77B DATED MAY 20, 2011 - PAGE 165 OF THE STANDARD PLANS BOOK DATED 2010.

REVISED STANDARD PLAN RSP D77B

4-4-13

Dist	COUNTY	ROUTE	POST MILES TOTAL PROJECT	SHEET No.	TOTAL SHEETS
01	Lak	20	13.5/31.4	70	73

REGISTERED CIVIL ENGINEER

July 19, 2013
PLANS APPROVAL DATE

REGISTERED PROFESSIONAL ENGINEER
Gurinderpal Bhullar
No. C48815
Exp. 9-30-14
CIVIL
STATE OF CALIFORNIA

THE STATE OF CALIFORNIA OR ITS OFFICERS OR AGENTS SHALL NOT BE RESPONSIBLE FOR THE ACCURACY OR COMPLETENESS OF SCANNED COPIES OF THIS PLAN SHEET.

TO ACCOMPANY PLANS DATED 5-27-14

TABLE 1

TAPER LENGTH CRITERIA AND CHANNELIZING DEVICE SPACING

SPEED (S)	MINIMUM TAPER LENGTH * FOR WIDTH OF OFFSET 12 FEET (W)				MAXIMUM CHANNELIZING DEVICE SPACING		
					X	Y	Z **
	TANGENT 2L	MERGING L	SHIFTING L/2	SHOULDER L/3	TAPER	TANGENT	CONFLICT
mph	ft	ft	ft	ft	ft	ft	ft
20	160	80	40	27	20	40	10
25	250	125	63	42	25	50	12
30	360	180	90	60	30	60	15
35	490	245	123	82	35	70	17
40	640	320	160	107	40	80	20
45	1080	540	270	180	45	90	22
50	1200	600	300	200	50	100	25
55	1320	660	330	220	55	110	27
60	1440	720	360	240	60	120	30
65	1560	780	390	260	65	130	32
70	1680	840	420	280	70	140	35

* - For other offsets, use the following merging taper length formula for L:
For speed of 40 mph or less, $L = WS^2/60$
For speed of 45 mph or more, $L = WS$

Where: L = Taper length in feet
W = Width of offset in feet
S = Posted speed limit, off-peak 85th-percentile speed prior to work starting, or the anticipated operating speed in mph

** - Use for taper and tangent sections where there are no pavement markings or where there is a conflict between existing pavement markings and channelizers (CA).

TABLE 2

LONGITUDINAL BUFFER SPACE AND FLAGGER STATION SPACING

SPEED *	Min D **	DOWNGRADE Min D ***		
		-3%	-6%	-9%
mph	ft	ft	ft	ft
20	115	116	120	126
25	155	158	165	173
30	200	205	215	227
35	250	257	271	287
40	305	315	333	354
45	360	378	400	427
50	425	446	474	507
55	495	520	553	593
60	570	598	638	686
65	645	682	728	785
70	730	771	825	891

* - Speed is posted speed limit, off-peak 85th-percentile speed prior to work starting, or the anticipated operating speed in mph

** - Longitudinal buffer space or flagger station spacing

*** - Use on sustained downgrade steeper than -3 percent and longer than 1 mile.

TABLE 3

ADVANCE WARNING SIGN SPACING

ROAD TYPE	DISTANCE BETWEEN SIGNS *		
	A	B	C
	ft	ft	ft
URBAN - 25 mph OR LESS	100	100	100
URBAN - MORE THAN 25 mph TO 40 mph	250	250	250
URBAN - MORE THAN 40 mph	350	350	350
RURAL	500	500	500
EXPRESSWAY / FREEWAY	1000	1500	2640

* - The distances are approximate, are intended for guidance purposes only, and should be applied with engineering judgment. These distances should be adjusted by the Engineer for field conditions, if necessary, by increasing or decreasing the recommmended distances.

STATE OF CALIFORNIA
DEPARTMENT OF TRANSPORTATION

TRAFFIC CONTROL SYSTEM TABLES FOR LANE AND RAMP CLOSURES

NO SCALE

RSP T9 DATED JULY 19, 2013 SUPERSEDES RSP T9 DATED APRIL 19, 2013 THAT SUPPLEMENTS THE STANDARD PLANS BOOK DATED 2010.

REVISED STANDARD PLAN RSP T9

2010 REVISED STANDARD PLAN RSP T9

4-30-13

Dist	COUNTY	ROUTE	POST MILES TOTAL PROJECT	SHEET No.	TOTAL SHEETS
01	Lak	20	13.5/31.4	71	73

REGISTERED CIVIL ENGINEER

April 19, 2013
PLANS APPROVAL DATE

REGISTERED PROFESSIONAL ENGINEER
Gurinderpal Bhullar
No. C48815
Exp. 9-30-14
CIVIL
STATE OF CALIFORNIA

THE STATE OF CALIFORNIA OR ITS OFFICERS OR AGENTS SHALL NOT BE RESPONSIBLE FOR THE ACCURACY OR COMPLETENESS OF SCANNED COPIES OF THIS PLAN SHEET.

TO ACCOMPANY PLANS DATED 5-27-14

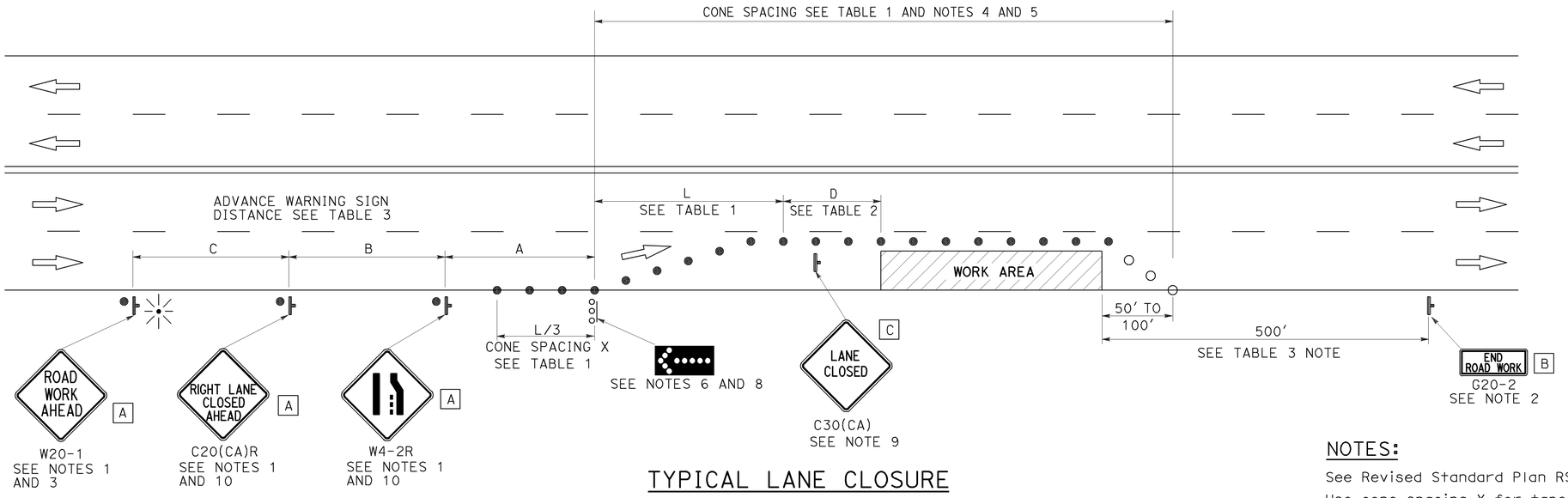

TYPICAL LANE CLOSURE

NOTES:

See Revised Standard Plan RSP T9 for tables.

Use cone spacing X for taper segment, Y for tangent segment or Z for conflict situations, as approriate, per Table 1, unless X, Y, or Z cone spacing is shown on this sheet.

Unless otherwise specified in the special provisions, all temporary warning signs shall have black legend on fluorescent orange background.

California codes are designated by (CA). Otherwise, Federal (MUTCD) codes are shown.

NOTES:

1. Each advance warning sign shall be equipped with at least two flags for daytime closure. Each flag shall be at least 16" x 16" in size and shall be orange or fluorescent red-orange in color. Flashing beacons shall be placed at the locations indicated for lane closure during hours of darkness.
2. A G20-2 "END ROAD WORK" sign, as appropriate, shall be placed at the end of the lane closure unless the end of work area is obvious, or ends within a larger project's limits.
3. If the W20-1 sign would follow within 2000' of a stationary W20-1 or G20-1 "ROAD WORK NEXT _____ MILES", use a C20(CA) sign for the first advance warning sign.
4. All cones used for lane closures during the hours of darkness shall be fitted with retroreflective bands (or sleeves) as specified in the specifications.
5. Portable delineators, placed at one-half the spacing indicated for traffic cones, may be used instead of cones for daytime closures only.
6. Flashing arrow sign shall be either Type I or Type II.
7. For approach speeds over 50 mph, use the "Traffic Control System for Lane Closure On Freeways And Expressways" plan for lane closure details and requirements.
8. A minimum 1500' of sight distance shall be provided where possible for vehicles approaching the first flashing arrow sign. Lane closures shall not begin at the top of crest vertical curve or on a horizontal curve.
9. Place a C30(CA) sign every 2000' throughout length of lane closure.
10. Median lane closures shall conform to the details as shown except that C20(CA)L and W4-2L signs shall be used.
11. At least one person shall be assigned to provide full time maintenance of traffic control devices for lane closure unless, otherwise directed by the Engineer.

LEGEND

- ● TRAFFIC CONE
- ○ TRAFFIC CONE (OPTIONAL TAPER)
- TEMPORARY TRAFFIC CONTROL SIGN
- FLASHING ARROW SIGN (FAS)
- FAS SUPPORT OR TRAILER
- PORTABLE FLASHING BEACON

SIGN PANEL SIZE (Min)

A	48" x 48"
B	36" x 18"
C	30" x 30"

STATE OF CALIFORNIA
DEPARTMENT OF TRANSPORTATION

TRAFFIC CONTROL SYSTEM FOR LANE CLOSURE ON MULTILANE CONVENTIONAL HIGHWAYS

NO SCALE

RSP T11 DATED APRIL 19, 2013 SUPERSEDES STANDARD PLAN T11 DATED MAY 20, 2011 - PAGE 239 OF THE STANDARD PLANS BOOK DATED 2010.

REVISED STANDARD PLAN RSP T11

2010 REVISED STANDARD PLAN RSP T11

4-2-13

Dist	COUNTY	ROUTE	POST MILES TOTAL PROJECT	SHEET No.	TOTAL SHEETS
01	Lak	20	13.5/31.4	72	73

REGISTERED CIVIL ENGINEER

April 19, 2013
PLANS APPROVAL DATE

REGISTERED PROFESSIONAL ENGINEER
Gurinderpal Bhullar
No. C48815
Exp. 9-30-14
CIVIL
STATE OF CALIFORNIA

THE STATE OF CALIFORNIA OR ITS OFFICERS OR AGENTS SHALL NOT BE RESPONSIBLE FOR THE ACCURACY OR COMPLETENESS OF SCANNED COPIES OF THIS PLAN SHEET.

TO ACCOMPANY PLANS DATED 5-27-14

2010 REVISED STANDARD PLAN RSP T13

NOTES:

See Revised Standard Plan RSP T9 for tables.

Use cone spacing X for taper segment, Y for tangent segment or Z for conflict situations, as approriate, per Table 1, unless X, Y, or Z cone spacing is shown on this sheet.

Unless otherwise specified in the special provisions, all temporary warning signs shall have black legend on fluorescent orange background.

California codes are designated by (CA). Otherwise, Federal (MUTCD) codes are shown.

TYPICAL LANE CLOSURE WITH REVERSIBLE CONTROL

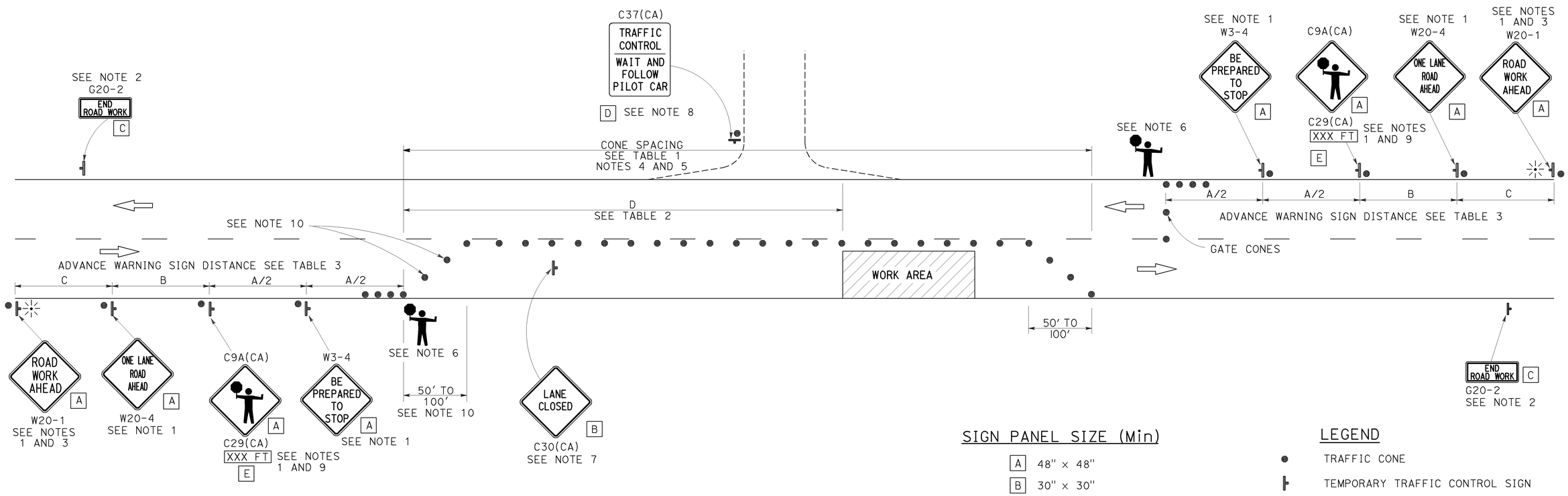

SIGN PANEL SIZE (Min)

A	48" × 48"
B	30" × 30"
C	36" × 18"
D	36" × 42"
E	20" × 7"

LEGEND

- TRAFFIC CONE
- TEMPORARY TRAFFIC CONTROL SIGN
- PORTABLE FLASHING BEACON
- FLAGGER

NOTES:

1. Each advance warning sign in each direction of travel shall be equipped with at least two flags for daytime closure. Each flag shall be at least 16" x 16" in size and shall be orange or fluorescent red-orange in color. Flashing beacons shall be placed at the locations indicated for lane closure during hours of darkness.
2. A G20-2 "END ROAD WORK" sign, as appropriate, shall be placed at the end of the lane control unless the end of work area is obvious, or ends within a larger project's limits.
3. If the W20-1 sign would follow within 2000' of a stationary W20-1 or G20-1 "ROAD WORK NEXT _____ MILES", use a W20-4 sign for the first advance warning sign.
4. All cones used for lane closures during the hours of darkness shall be fitted with retroreflective bands (or sleeves) as specified in the specifications.
5. Portable delineators, placed at one-half the spacing indicated for traffic cones, may be used instead of cones for daytime closures only.
6. Additional advance flaggers may be required. Flagger should stand in a conspicuous place, be visible to approaching traffic as well as approaching vehicles after the first vehicle has stopped. During the hours of darkness, the flagging-station and flagger shall be illuminated and clearly visible to approaching traffic. The illumination footprint of the lighting on the ground shall be at least 20' in diameter. Place a minimum of four cones at 50' intervals in advance of flagger station as shown.
7. Place C30(CA) "LANE CLOSED" sign at 500' to 1000' intervals throughout extended work areas. They are optional if the work area is visible from the flagger station.
8. When a pilot car is used, place a C37(CA) "TRAFFIC CONTROL-WAIT AND FOLLOW PILOT CAR" sign with black legend on white background at all intersections, driveways and alleys without a flagger within traffic control area. Signs shall be clean and visible at all times. Where traffic can not be effectively self-regulated, at least one flagger shall be used at each intersection within traffic control area.
9. An optional C29(CA) sign may be placed below the C9A(CA) sign.
10. Either traffic cones or barricades shall be placed on the taper. Barricades shall be Type I, II, or III.

STATE OF CALIFORNIA
DEPARTMENT OF TRANSPORTATION

TRAFFIC CONTROL SYSTEM FOR LANE CLOSURE ON TWO LANE CONVENTIONAL HIGHWAYS

NO SCALE

RSP T13 DATED APRIL 19, 2013 SUPERSEDES STANDARD PLAN T13 DATED MAY 20, 2011 - PAGE 241 OF THE STANDARD PLANS BOOK DATED 2010.

REVISED STANDARD PLAN RSP T13

Dist	COUNTY	ROUTE	POST MILES TOTAL PROJECT	SHEET No.	TOTAL SHEETS
01	Lak	20	13.5/31.4	73	73

REGISTERED CIVIL ENGINEER

April 19, 2013
PLANS APPROVAL DATE

REGISTERED PROFESSIONAL ENGINEER Gurinderpal Bhullar No. C48815 Exp. 9-30-14 CIVIL STATE OF CALIFORNIA

THE STATE OF CALIFORNIA OR ITS OFFICERS OR AGENTS SHALL NOT BE RESPONSIBLE FOR THE ACCURACY OR COMPLETENESS OF SCANNED COPIES OF THIS PLAN SHEET.

TO ACCOMPANY PLANS DATED 5-27-14

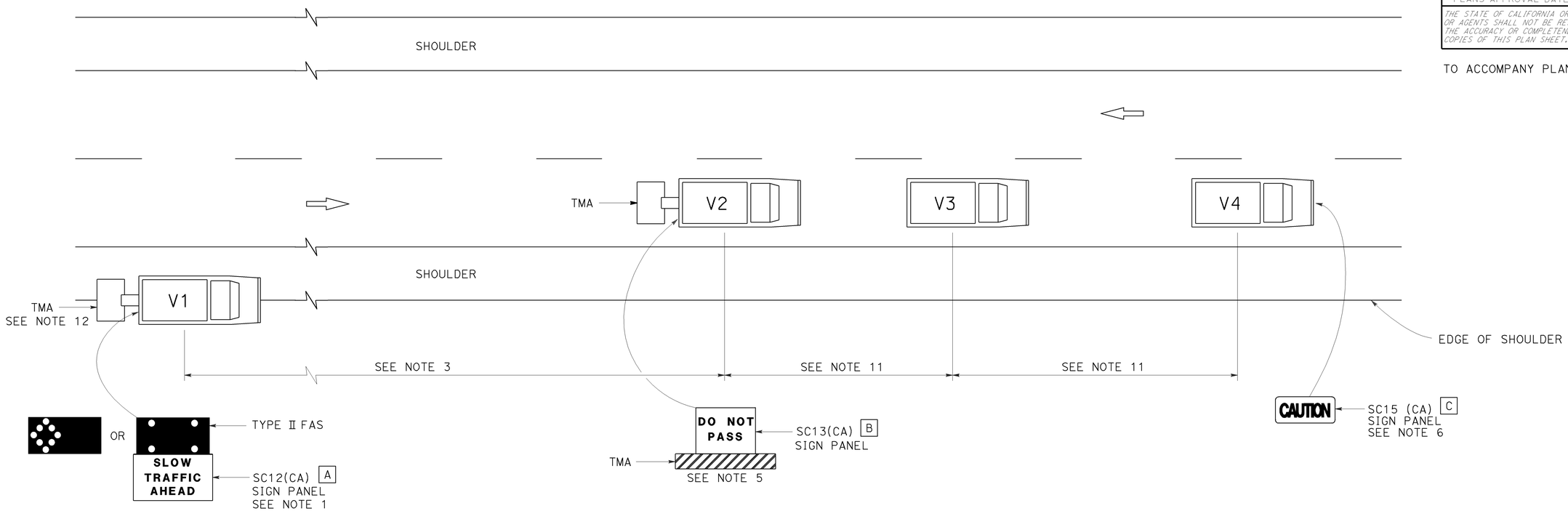

LEGEND

V1	SIGN VEHICLE
V2	SHADOW VEHICLE
V3	WORK/APPLICATION VEHICLE
V4	SIGN VEHICLE
TMA	TRUCK-MOUNTED ATTENUATOR
	FLASHING ARROW SIGN (FAS) IN FLASHING CAUTION MODE
	FLASHING ARROW SIGN (FAS) IN ALTERNATING DIAMOND CAUTION

SIGN PANEL SIZE (Min)

A	72" x 42"
B	54" x 42"
C	54" x 24"

NOTES:

1. Either a changeable message sign or a SC12(CA) "SLOW TRAFFIC AHEAD" sign shall be mounted on the rear of sign vehicle V1. The changeable message sign shall be sequenced to show the "CAUTION" message first, follow by the "SLOW TRAFFIC AHEAD" message. A Type II flashing arrow sign may be used with the SC12(CA) sign panel.
2. Sign vehicle V1 should be positioned where highly visible when shoulders are not available.
3. If traffic queues develop, sign vehicle V1 should be positioned upstream from the end of queue.
4. Vehicle-mounted sign panels shall have Type III or above retroreflective sheeting, black on white, or black on fluorescent orange, with 6" minimum series D letters per Caltrans sign specifications.
5. Shadow vehicle shall be equipped with a truck-mounted attenuator. The sign panel shown shall be mounted on the rear of shadow vehicle V2. The message "LANE CLOSED" may be used in place of the "DO NOT PASS" message.
6. The sign panel shown shall be mounted on the front of sign vehicle V4, facing opposing traffic.
7. All vehicles shall be equipped with flashing or rotating amber lights.
8. Sign vehicle V4 will not be required when the work and vehicles V2 and V3 are 2′ or more from the centerline of the highway during the work or application operations.
9. All vehicles used for lane closures shall be equipped with two-way radios and the vehicle operators shall maintain communication during the work or application operation.
10. This plan shall not be used where workers would be on foot in the work area. Use a stationary type lane closure (Revised Standard Plan T13) for this condition.
11. Minimize spacing between vehicles V2 and V3 and vehicles V3 and V4 to deter road users from driving in between them.
12. If sign vehicle V1 encroaches into the traffic lane due to insufficient shoulder width, sign vehicle V1 shall be equipped with a truck-mounted attenuator. Sign vehicle V1 shall stay as close to the edge of shoulder as practicable.

STATE OF CALIFORNIA
DEPARTMENT OF TRANSPORTATION

TRAFFIC CONTROL SYSTEM FOR MOVING LANE CLOSURE ON TWO LANE HIGHWAYS

NO SCALE

RSP T17 DATED APRIL 19, 2013 SUPERSEDES STANDARD PLAN T17
DATED MAY 20, 2011 - PAGE 245 OF THE STANDARD PLANS BOOK DATED 2010.

REVISED STANDARD PLAN RSP T17

2010 REVISED STANDARD PLAN RSP T17

12-18-12