Dist	COUNTY	ROUTE	POST MILES TOTAL PROJECT	SHEET No.	TOTAL SHEETS
01	HUM	299	R21.1/R21.5	1	76

STATE OF CALIFORNIA

DEPARTMENT OF TRANSPORTATION

ACHSSTP-P299(191)E

PROJECT PLANS FOR CONSTRUCTION ON

STATE HIGHWAY

IN HUMBOLDT COUNTY ABOUT 16 MILES EAST OF BLUE LAKE FROM 0.5 TO 0.9 MILE EAST OF CHEZEM ROAD

TO BE SUPPLEMENTED BY STANDARD PLANS DATED MAY 2010

INDEX OF PLANS

SHEET No.	DESCRIPTION
1	TITLE AND LOCATION MAP
2-4	TYPICAL CROSS SECTIONS
5	LAYOUTS
6,7	PROFILES AND SUPERELEVATION DIAGRAMS
8-13	CONSTRUCTION DETAILS
14-20	DRAINAGE PLANS, PROFILES, DETAILS AND QUANTITIES
21	CONSTRUCTION AREA SIGNS
22-32	STAGE CONSTRUCTION AND TRAFFIC HANDLING PLANS, DETAILS AND QUANTITIES
33	TRAFFIC HANDLING PLAN
34-36	PAVEMENT DELINEATION PLANS, DETAILS AND QUANTITIES
37	SUMMARY OF QUANTITIES
38-41	EROSION CONTROL PLANS
42-47	ELECTRICAL PLANS
48-76	REVISED STANDARD PLANS

THE STANDARD PLANS LIST APPLICABLE TO THIS CONTRACT IS INCLUDED IN THE NOTICE TO BIDDERS AND SPECIAL PROVISIONS BOOK.

LOCATION MAP

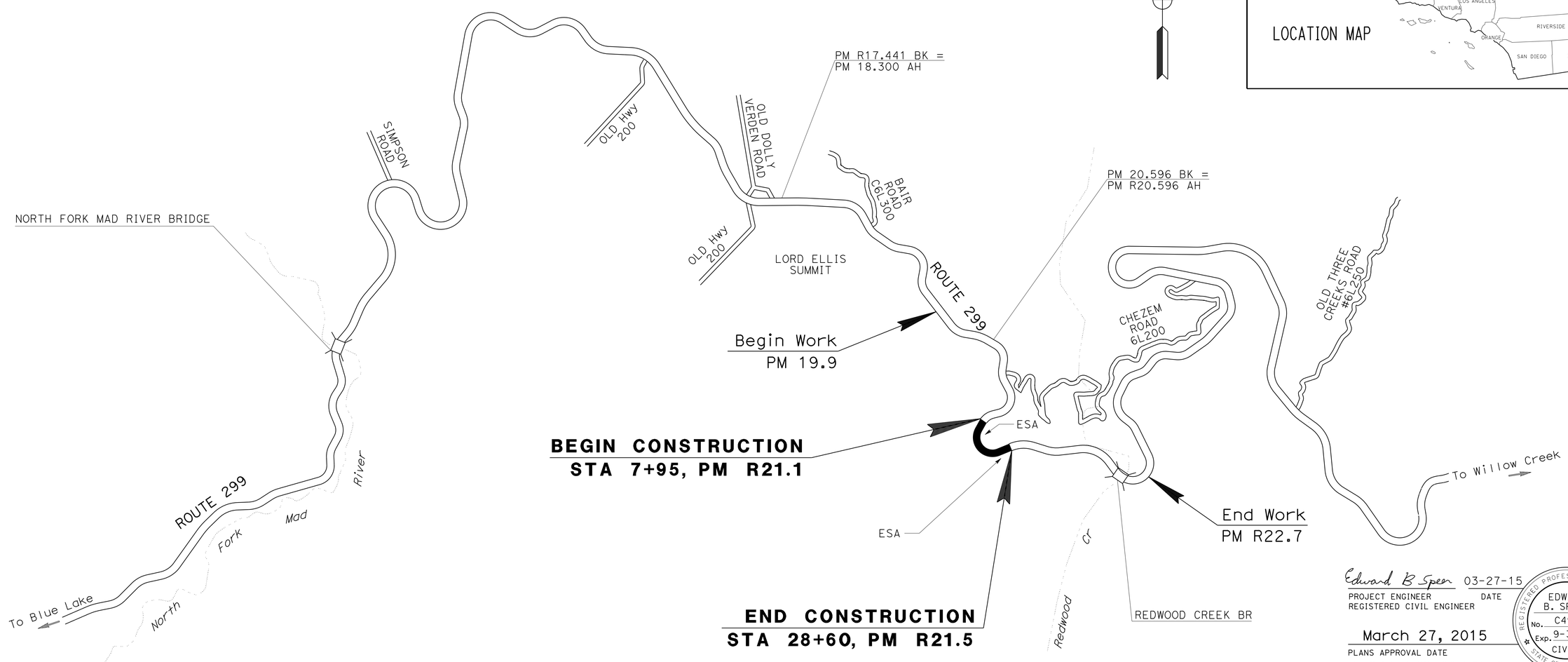

Edward B Speer 03-27-15
PROJECT ENGINEER DATE
REGISTERED CIVIL ENGINEER

March 27, 2015
PLANS APPROVAL DATE

REGISTERED PROFESSIONAL ENGINEER
EDWARD B. SPEER
No. C49740
Exp. 9-30-16
CIVIL
STATE OF CALIFORNIA

THE STATE OF CALIFORNIA OR ITS OFFICERS OR AGENTS SHALL NOT BE RESPONSIBLE FOR THE ACCURACY OR COMPLETENESS OF SCANNED COPIES OF THIS PLAN SHEET.

THE CONTRACTOR SHALL POSSESS THE CLASS (OR CLASSES) OF LICENSE AS SPECIFIED IN THE "NOTICE TO BIDDERS."

NO SCALE

CONTRACT No.	01-0A5204
PROJECT ID	0100020425

P:\proj1\01\0a520_plans\pse\0100020425ab001.dgn

PROJECT MANAGER: KIM FLOYD
DESIGN ENGINEER: JOHN L. MARTIN

LAST REVISION 03-27-15 | DATE PLOTTED => 30-MAR-2015 | TIME PLOTTED => 08:28

Dist	COUNTY	ROUTE	POST MILES TOTAL PROJECT	SHEET No.	TOTAL SHEETS
01	HUM	299	R21.1/R21.5	2	76

Edward B Speer 03-27-15
REGISTERED CIVIL ENGINEER DATE

03-27-15
PLANS APPROVAL DATE

REGISTERED PROFESSIONAL ENGINEER EDWARD B. SPEER No. C49740 Exp. 09-30-16 CIVIL STATE OF CALIFORNIA

THE STATE OF CALIFORNIA OR ITS OFFICERS OR AGENTS SHALL NOT BE RESPONSIBLE FOR THE ACCURACY OR COMPLETENESS OF SCANNED COPIES OF THIS PLAN SHEET.

NOTES:

1. DIMENSIONS OF THE PAVEMENT STRUCTURES (STRUCTURAL SECTIONS) ARE SUBJECT TO TOLERANCES SPECIFIED IN THE STANDARD SPECIFICATIONS.
2. SUPERELEVATIONS ARE SHOWN ON THE SUPERELEVATION DIAGRAM.
3. SEE SHEET L-1 FOR COLD PLANE AC PAVEMENT AREAS.

ABBREVIATIONS:

GPI	GEOSYNTHETIC PAVEMENT INTERLAYER
(E)	EXISTING
HMA-A	HOT MIX ASPHALT (TYPE A)
S/C	SAWCUT
WEED MAT	WEED CONTROL MAT (FIBER)

DESIGN DESIGNATION

2015 AADT = 3280	D = 60%
2035 AADT = 3790	T = 11%
2035 PHV = 520	V = 55 MPH
ESAL = 1,575,200	TI = 9.5

PAVEMENT CLIMATE REGION: NORTH COAST

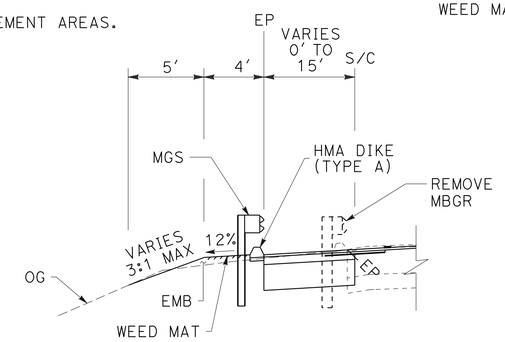

"A1" STA 12+12.00 TO 13+69

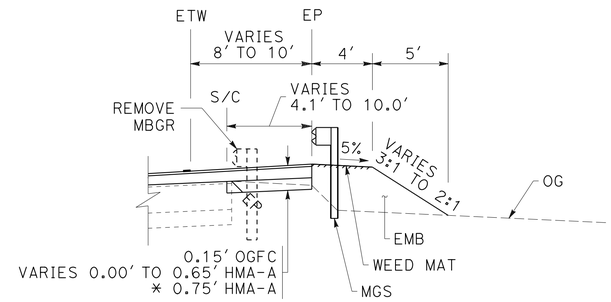

"A1" STA 11+51.14 TO 13+16
* PLACED DURING STAGE 1

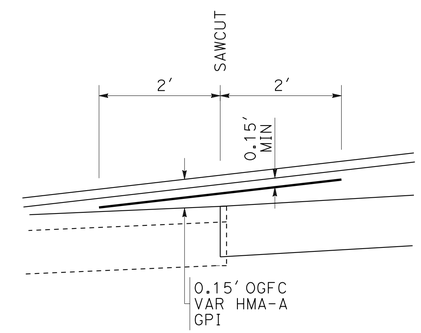

0.15' OR MORE HMA

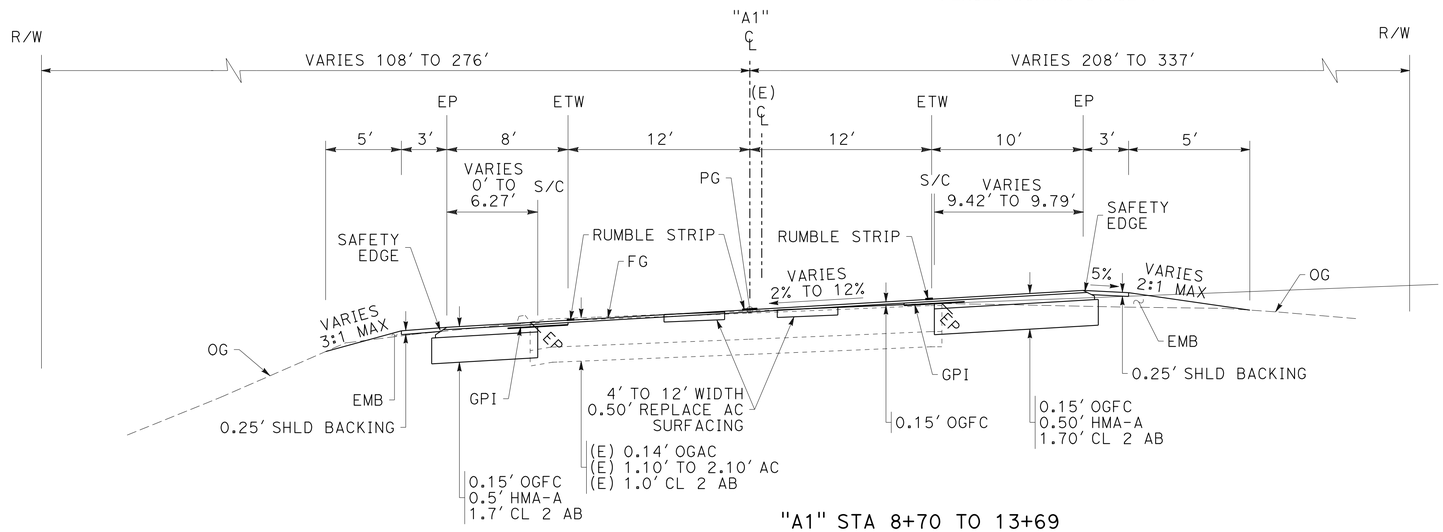

"A1" STA 8+70 TO 13+69

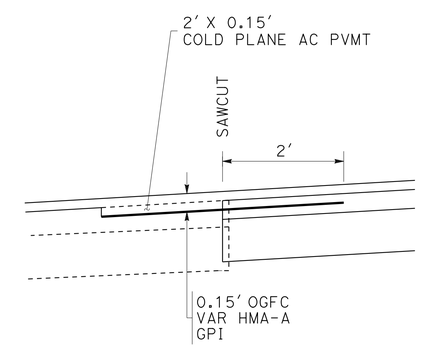

LESS THAN 0.15' HMA

GPI DETAIL

"A1" STA 8+77.90 TO 27+75 LT
"A1" STA 8+70 TO 11+51.14 RT

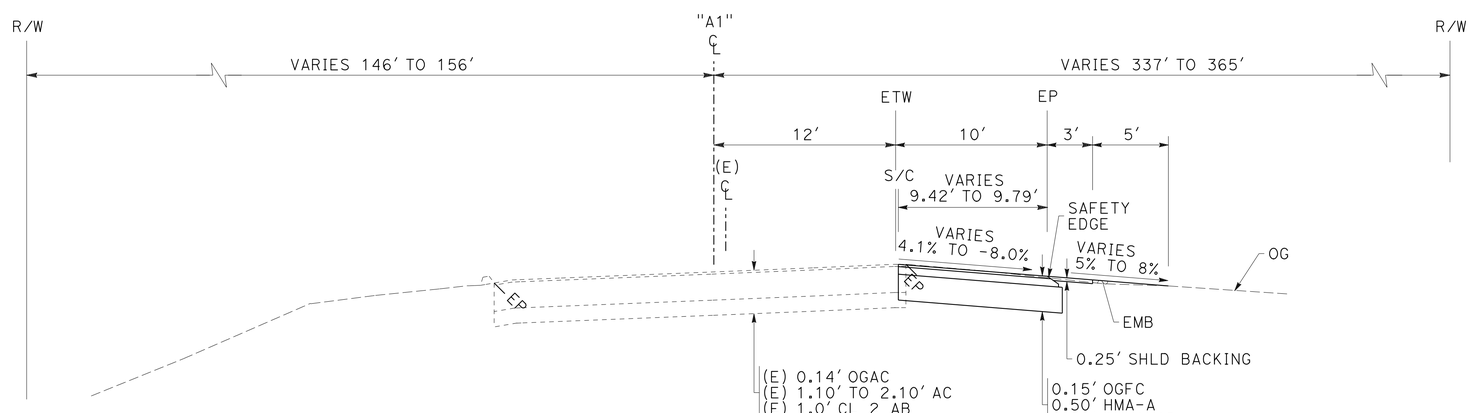

"A1" STA 8+00 TO 8+70

ROUTE 299

TYPICAL CROSS SECTIONS

NO SCALE

X-1

STATE OF CALIFORNIA - DEPARTMENT OF TRANSPORTATION
Caltrans® **DESIGN**
FUNCTIONAL SUPERVISOR: JOHN L. MARTIN
CALCULATED-DESIGNED BY: JOLENA ASTIN
CHECKED BY: ED SPEER
REVISED BY / DATE REVISED

P:\proj1\01\0a520_plans\pse\0100020425ca001.DGN

LAST REVISION 03-27-15 | DATE PLOTTED => 30-MAR-2015 | TIME PLOTTED => 08:28

Dist	COUNTY	ROUTE	POST MILES TOTAL PROJECT	SHEET No.	TOTAL SHEETS
01	HUM	299	R21.1/R21.5	3	76

Edward B Speer 03-27-15
REGISTERED CIVIL ENGINEER DATE

03-27-15
PLANS APPROVAL DATE

REGISTERED PROFESSIONAL ENGINEER
EDWARD B. SPEER
No. C49740
Exp. 09-30-16
CIVIL
STATE OF CALIFORNIA

THE STATE OF CALIFORNIA OR ITS OFFICERS OR AGENTS SHALL NOT BE RESPONSIBLE FOR THE ACCURACY OR COMPLETENESS OF SCANNED COPIES OF THIS PLAN SHEET.

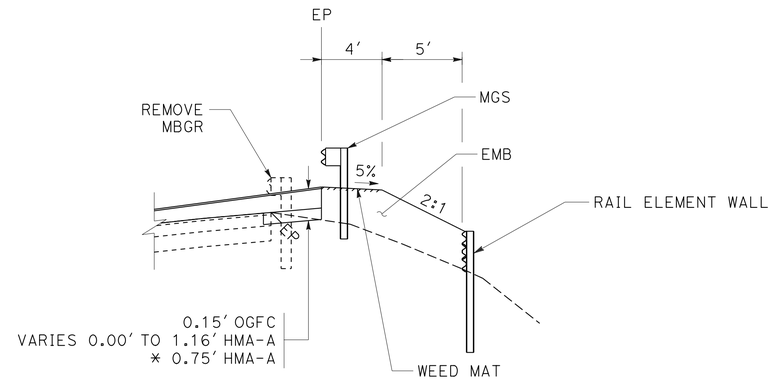

"A1" STA 13+16 TO "A1" STA 14+94
* PLACED DURING STAGE 1

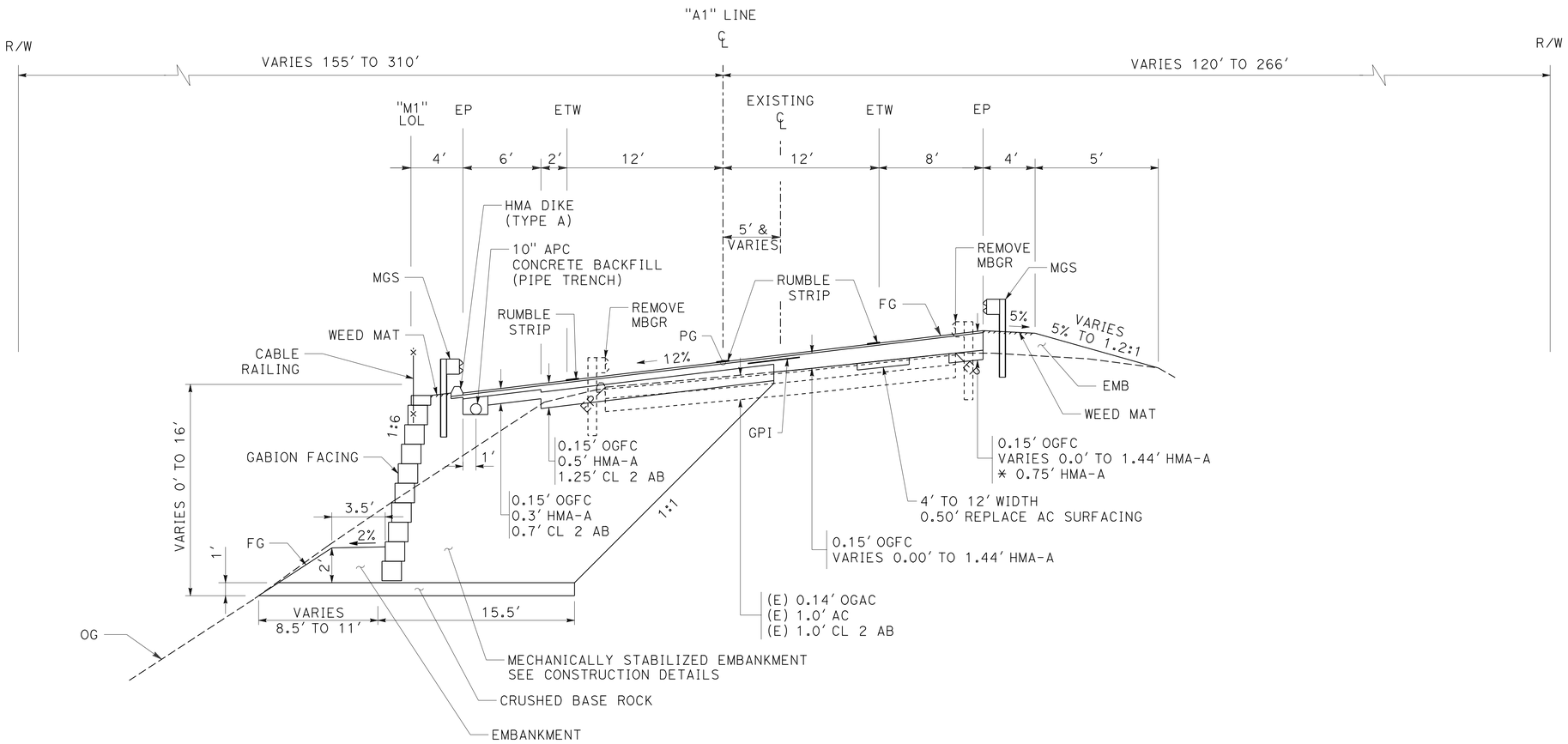

"A1" STA 13+69 TO "A1" STA 23+00
* PLACED DURING STAGE 1

ROUTE 299

TYPICAL CROSS SECTIONS

NO SCALE

X-2

REVISED BY | DATE REVISED
ED SPEER | JOHN L. MARTIN
CALCULATED-DESIGNED BY | CHECKED BY
FUNCTIONAL SUPERVISOR | JOHN L. MARTIN
STATE OF CALIFORNIA - DEPARTMENT OF TRANSPORTATION
Caltrans
DESIGN

P:\proj1\01\0a5201_plans\pse\0100020425ca002.DGN

LAST REVISION | DATE PLOTTED => 30-MAR-2015
03-27-15 | TIME PLOTTED => 08:28

Dist	COUNTY	ROUTE	POST MILES TOTAL PROJECT	SHEET No.	TOTAL SHEETS
01	HUM	299	R21.1/R21.5	4	76

Edward B Speer 03-27-15
REGISTERED CIVIL ENGINEER DATE

03-27-15
PLANS APPROVAL DATE

REGISTERED PROFESSIONAL ENGINEER
EDWARD B. SPEER
No. C49740
Exp. 09-30-16
CIVIL
STATE OF CALIFORNIA

THE STATE OF CALIFORNIA OR ITS OFFICERS OR AGENTS SHALL NOT BE RESPONSIBLE FOR THE ACCURACY OR COMPLETENESS OF SCANNED COPIES OF THIS PLAN SHEET.

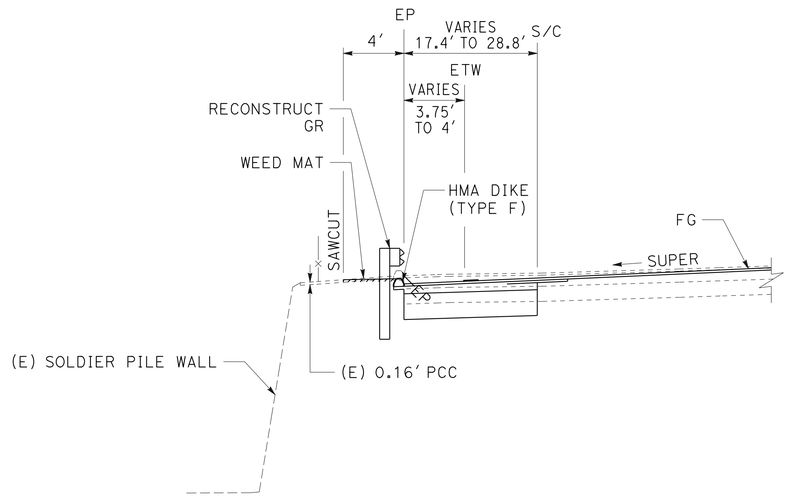

"A1" STA 26+41 TO "A1" STA 28+60

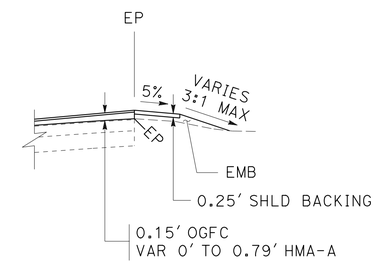

"A1" STA 23+00 TO "A1" STA 25+33.34
"A1" STA 27+40.17 TO "A1" STA 28+00

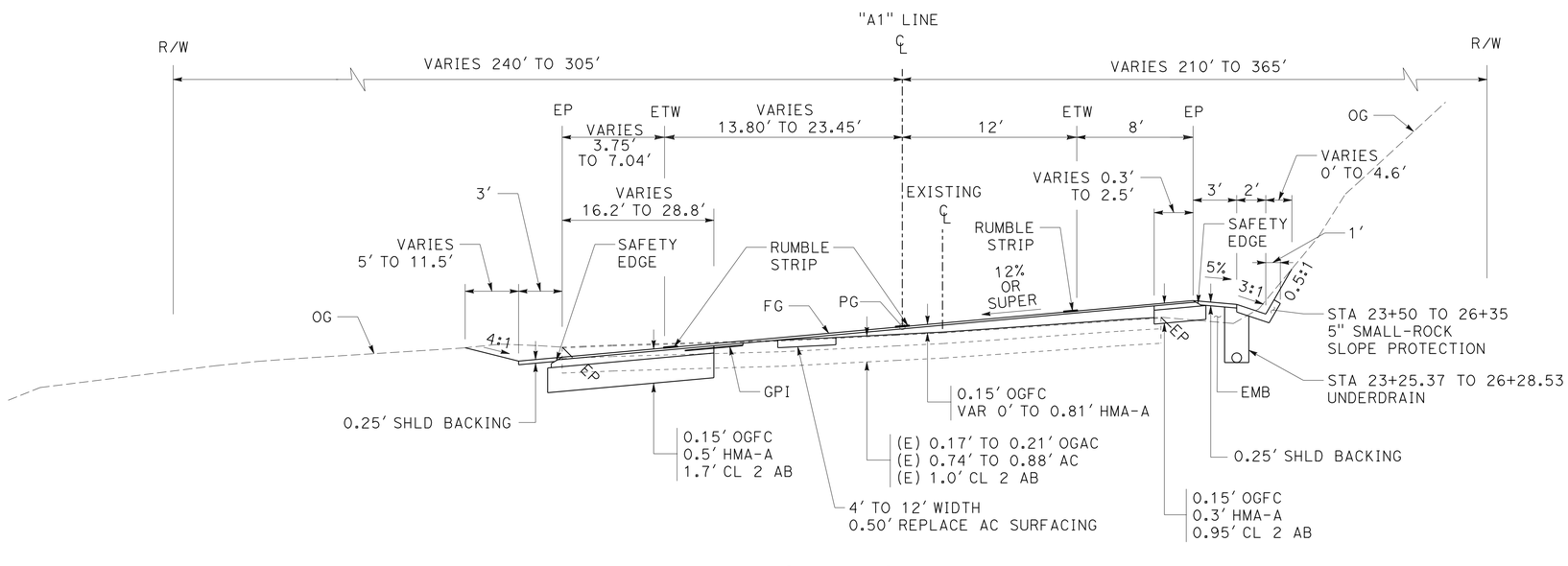

ROUTE 299

"A1" STA 23+00 TO "A1" STA 28+60

TYPICAL CROSS SECTIONS

NO SCALE

X-3

REVISED BY | DATE REVISED
JOLENA ASTIN | ED SPEER
CALCULATED-DESIGNED BY | CHECKED BY
FUNCTIONAL SUPERVISOR
JOHN L. MARTIN

STATE OF CALIFORNIA - DEPARTMENT OF TRANSPORTATION
Caltrans
DESIGN

P:\proj1\01\0a520_plans\pse\0100020425ca003.DGN

LAST REVISION 03-27-15 | DATE PLOTTED => 30-MAR-2015 | TIME PLOTTED => 08:28

Dist	COUNTY	ROUTE	POST MILES TOTAL PROJECT	SHEET No.	TOTAL SHEETS
01	HUM	299	R21.1/R21.5	5	76

Edward B Speer 03-27-15
REGISTERED CIVIL ENGINEER DATE

03-27-15
PLANS APPROVAL DATE

REGISTERED PROFESSIONAL ENGINEER
EDWARD B. SPEER
No. C49740
Exp. 09-30-16
CIVIL
STATE OF CALIFORNIA

THE STATE OF CALIFORNIA OR ITS OFFICERS OR AGENTS SHALL NOT BE RESPONSIBLE FOR THE ACCURACY OR COMPLETENESS OF SCANNED COPIES OF THIS PLAN SHEET.

NOTES:

1. FOR ACCURATE RIGHT OF WAY DATA, CONTACT RIGHT OF WAY ENGINEERING AT THE DISTRICT OFFICE.

ABBREVIATIONS:

TFESA	TEMPORARY FENCE (TYPE ESA)
REM	REMOVE
REW	RAIL ELEMENT WALL
AFTS	ALTERNATIVE FLARED TERMINAL SYSTEM
WEED MAT	WEED CONTROL MAT (FIBER)
GRD	GUARDRAIL

LEGEND:

RECONSTRUCTION AREA

HMA OVERLAY AREA
VARIES 0' TO 1.44' DEPTH

COLD PLANE AREA
VARIES 0' TO 0.75' DEPTH

CURVE DATA

No. ⊕	R	Δ	T	L
1	635.60'	22°23'24"	125.79'	248.38'
2	2676'	03°03'59"	71.62'	143.21'
3	600'	138°45'08"	1594.25'	1453.01'
4	2636.44'	04°01'34"	92.67'	185.26'

BENCHMARKS

No.	STATION	OFFSET	ELEVATION	DESCRIPTION
2111	09+31.63	23.99' LEFT	1317.12'	SPK
2112	11+80.99	51.36' LEFT	1298.03'	SPK
2117	12+00.80	26.48' RIGHT	1301.42'	ALCAR
2119	13+74.50	22.98' RIGHT	1289.70'	SPK
2116	13+74.84	20.41' LEFT	1285.94'	SPK
2121	14+99.58	25.92' RIGHT	1280.46'	SPK
2120	14+99.74	25.65' RIGHT	1280.37'	SPK
2122	16+59.85	22.43' RIGHT	1272.10'	SPK
2129	19+23.36	09.68' LEFT	1254.51'	PK NAIL
2130	19+66.28	25.60' RIGHT	1254.92'	SPK
2134	20+67.21	188.16' LEFT	1198.63'	SPK
2135	21+25.70	176.11' LEFT	1201.08'	SPK
2136	21+39.22	23.86' RIGHT	1244.42'	SPK
2144	25+78.30	31.56' LEFT	1215.43'	ALCAR
2150	28+45.47	29.54' RIGHT	1201.38'	PK/SHNR

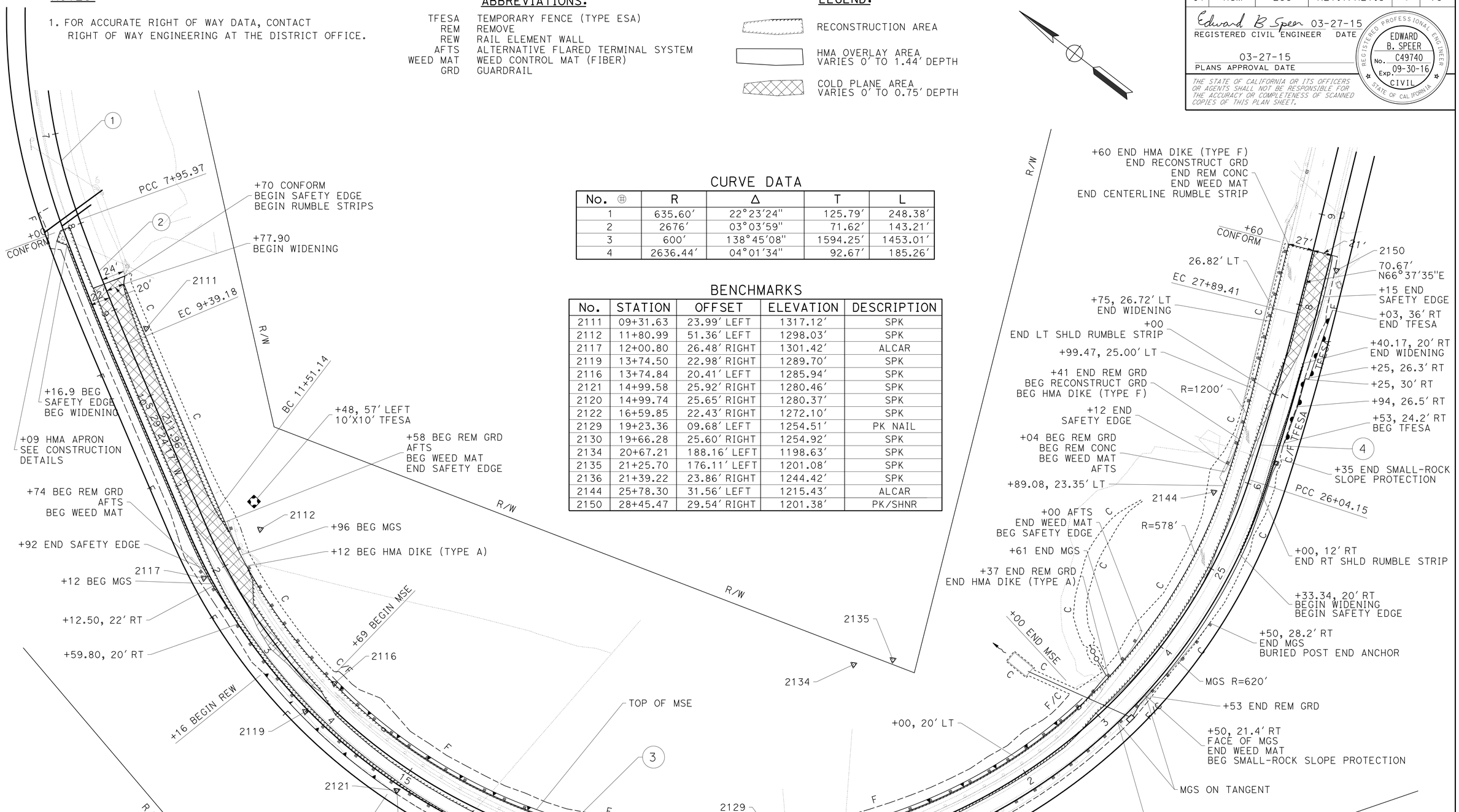

LAYOUT

SCALE: 1" = 50'

L-1

REVISED BY	DATE REVISED

CALCULATED-DESIGNED BY: BETH A. ELMORE
CHECKED BY: ED SPEER
FUNCTIONAL SUPERVISOR: JOHN L. MARTIN

STATE OF CALIFORNIA - DEPARTMENT OF TRANSPORTATION
Caltrans® DESIGN

P:\proj1\01\0a520_plans\pse\0100020425ea001.dgn

LAST REVISION 03-27-15
DATE PLOTTED => 30-MAR-2015
TIME PLOTTED => 08:28

Dist	COUNTY	ROUTE	POST MILES TOTAL PROJECT	SHEET No.	TOTAL SHEETS
01	HUM	299	R21.1/R21.5	6	76

Edward B Speer 03-27-15
REGISTERED CIVIL ENGINEER DATE

03-27-15
PLANS APPROVAL DATE

REGISTERED PROFESSIONAL ENGINEER
EDWARD B. SPEER
No. C49740
Exp. 09-30-16
CIVIL
STATE OF CALIFORNIA

THE STATE OF CALIFORNIA OR ITS OFFICERS OR AGENTS SHALL NOT BE RESPONSIBLE FOR THE ACCURACY OR COMPLETENESS OF SCANNED COPIES OF THIS PLAN SHEET.

NOTE: MSE VOLUMES SHOWN INCLUDE CRUSHED ROCK BASE, GABION ROCK AND STRUCTURE BACKFILL

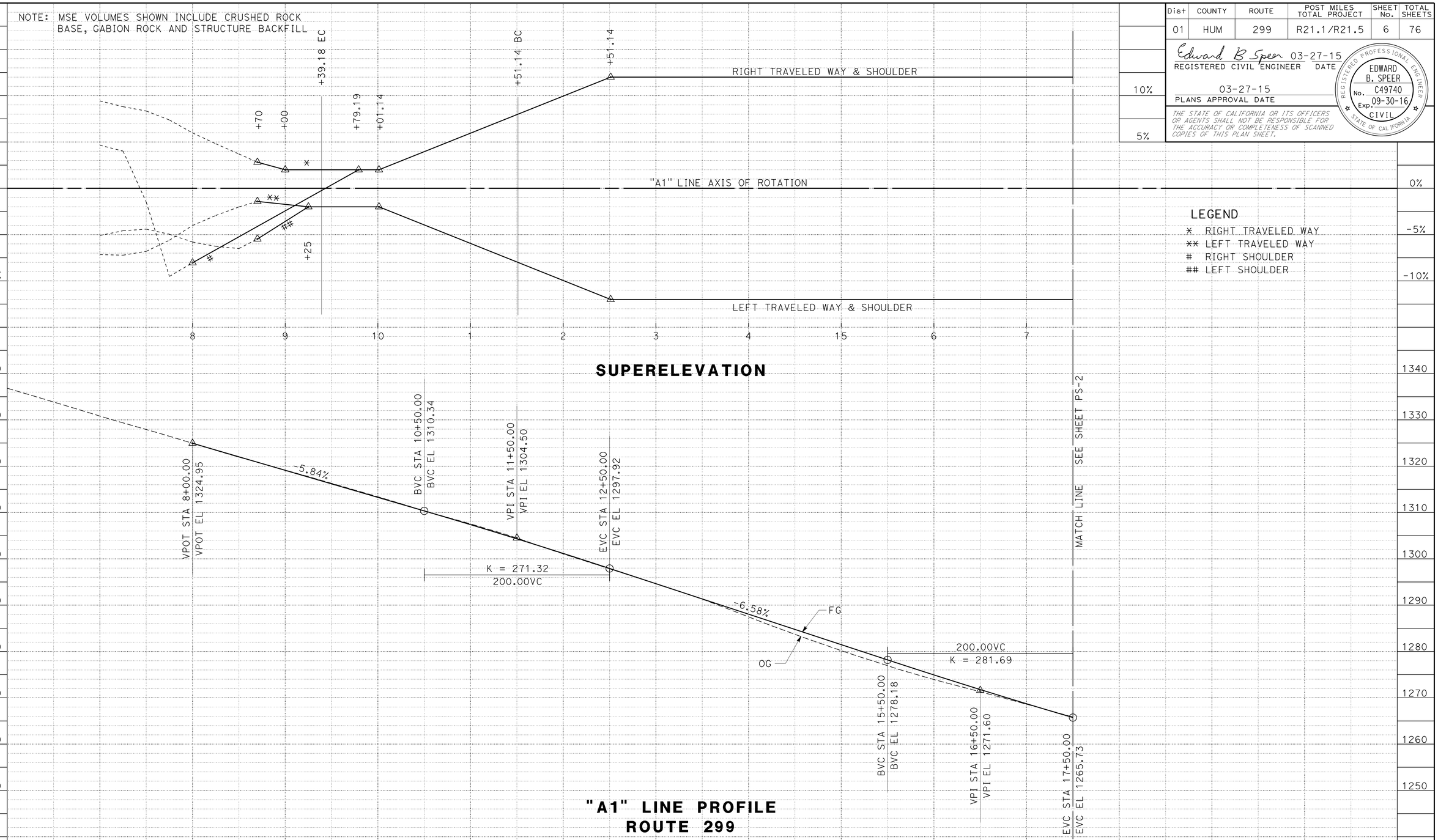

LEGEND
- * RIGHT TRAVELED WAY
- ** LEFT TRAVELED WAY
- # RIGHT SHOULDER
- ## LEFT SHOULDER

PROFILE AND SUPERELEVATION DIAGRAM

SCALE: 1" = 50' HORIZ
1" = 10' VERT

PS-1

STATION		8	9	10	1	2	3	4	15	6	7	SHEET TOTAL
CY	Exc		268		225		421		2362		1926	5202
	Emb		2		40		134		201		96	473
	MSE							2615		1904		4519

REVISED BY | DATE REVISED
JOHN L. MARTIN | ED SPEER
CALCULATED-DESIGNED BY | CHECKED BY
FUNCTIONAL SUPERVISOR: JOHN L. MARTIN

STATE OF CALIFORNIA - DEPARTMENT OF TRANSPORTATION
Caltrans DESIGN

P:\proj1\01\0as20_plans\pse\0100020425fb001.DGN

LAST REVISION 03-08-15 | DATE PLOTTED => 30-MAR-2015 | TIME PLOTTED => 08:28

Dist	COUNTY	ROUTE	POST MILES TOTAL PROJECT	SHEET No.	TOTAL SHEETS
01	HUM	299	R21.1/R21.5	7	76

Edward B Speer 03-27-15
REGISTERED CIVIL ENGINEER DATE

03-27-15
PLANS APPROVAL DATE

REGISTERED PROFESSIONAL ENGINEER
EDWARD B. SPEER
No. C49740
Exp. 09-30-16
CIVIL
STATE OF CALIFORNIA

THE STATE OF CALIFORNIA OR ITS OFFICERS OR AGENTS SHALL NOT BE RESPONSIBLE FOR THE ACCURACY OR COMPLETENESS OF SCANNED COPIES OF THIS PLAN SHEET.

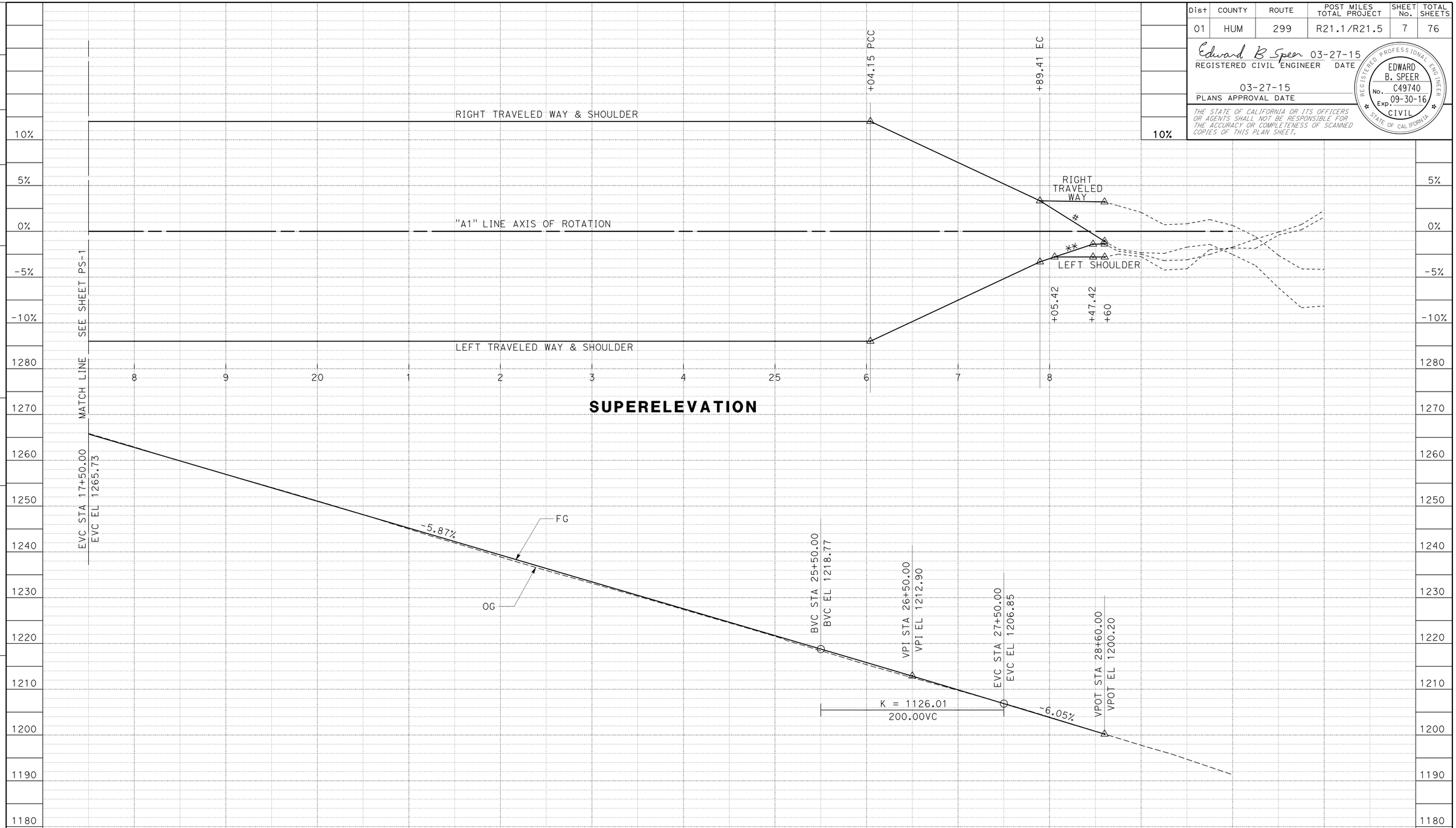

"A1" LINE PROFILE
ROUTE 299

PROFILE AND SUPERELEVATION DIAGRAM

SCALE: 1" = 50' Horiz
1" = 10' Vert

PS-2

	STATION	8–9	9–20	20–1	1–2	2–3	3–4	4–25	25–6	6–7	7–8	8–9	SHEET TOTAL	TOTAL
CY	Exc	1748	2284	2041	543	536	416						7568	12,770
CY	Emb	86	87	122	29	23	14						361	834
	MSE	1734	2180	1800									5714	10,233

REVISED BY | DATE REVISED
JOHN L. MARTIN | ED SPEER
CALCULATED-DESIGNED BY | CHECKED BY
FUNCTIONAL SUPERVISOR: JOHN L. MARTIN

STATE OF CALIFORNIA - DEPARTMENT OF TRANSPORTATION
Caltrans
DESIGN

P:\proj1\01\0a520_plans\pse\0100020425fb002.DGN

LAST REVISION 03-27-15 | DATE PLOTTED => 30-MAR-2015 | TIME PLOTTED => 08:28

Dist	COUNTY	ROUTE	POST MILES TOTAL PROJECT	SHEET No.	TOTAL SHEETS
01	HUM	299	R21.1/R21.5	8	76

Edward B Speer 03-27-15
REGISTERED CIVIL ENGINEER DATE

03-27-15
PLANS APPROVAL DATE

REGISTERED PROFESSIONAL ENGINEER EDWARD B. SPEER No. C49740 Exp. 09-30-16 CIVIL STATE OF CALIFORNIA

THE STATE OF CALIFORNIA OR ITS OFFICERS OR AGENTS SHALL NOT BE RESPONSIBLE FOR THE ACCURACY OR COMPLETENESS OF SCANNED COPIES OF THIS PLAN SHEET.

NOTES:

1. STACK GABION BASKETS ON TOP OF UNIAXIAL GEOGRID.
2. PLACE CABLE RAILING POST BASES IN GABION BASKETS BEFORE FILLING WITH ROCKS.
3. SEE DRAINAGE PROFILES FOR FOUR DI'S TO BE PLACED INLINE WITH 10" APC.
4. MSE FACING MUST BE GABIONS NO OTHER ALTERNATIVES ARE PERMITTED.

GEOGRID

TYPE	LONG TERM DESIGN STRENGTH LB/FT
UNIAXIAL	12,500
BIAXIAL	2000

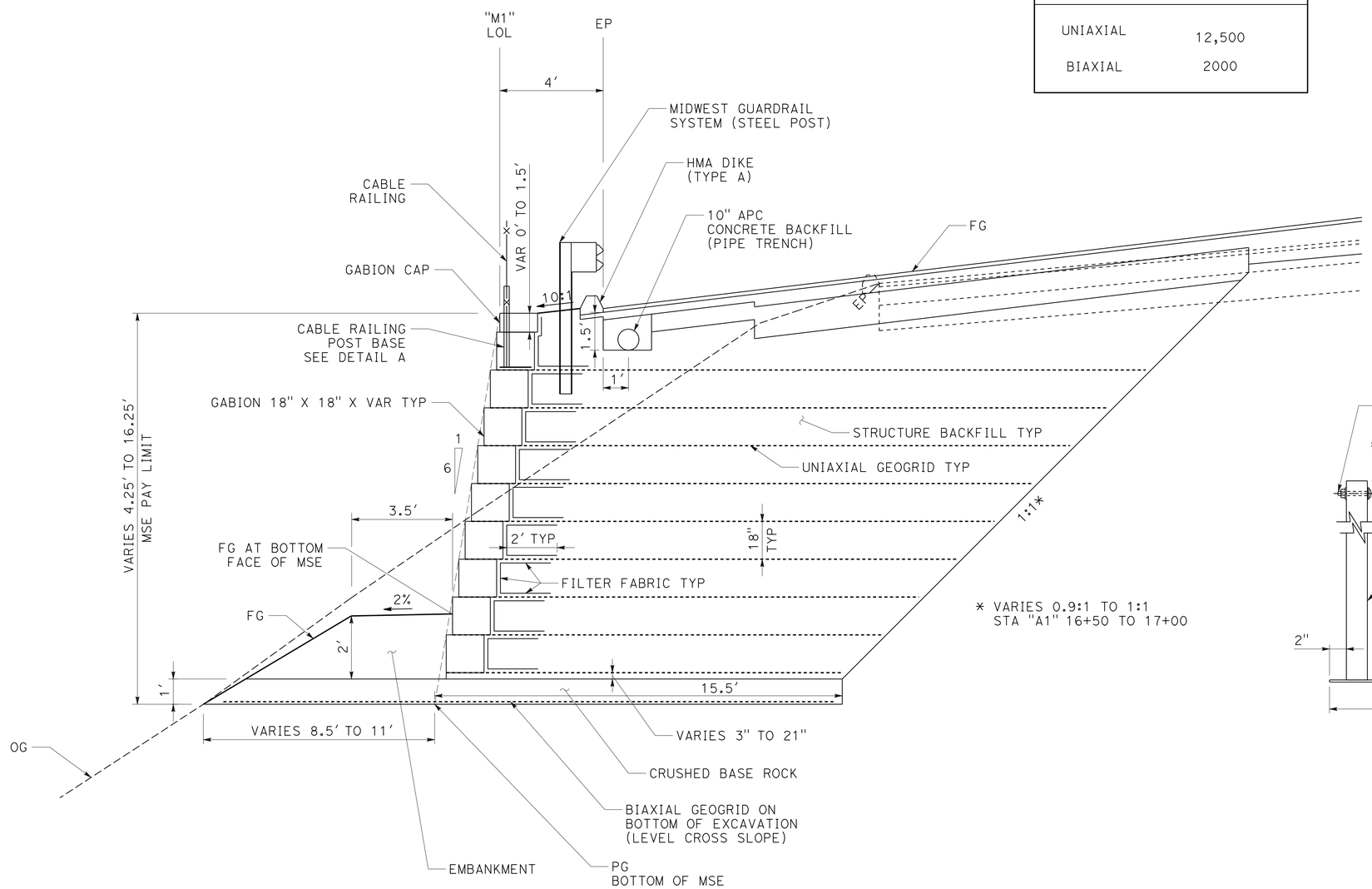

MECHANICALLY STABILIZED EMBANKMENT

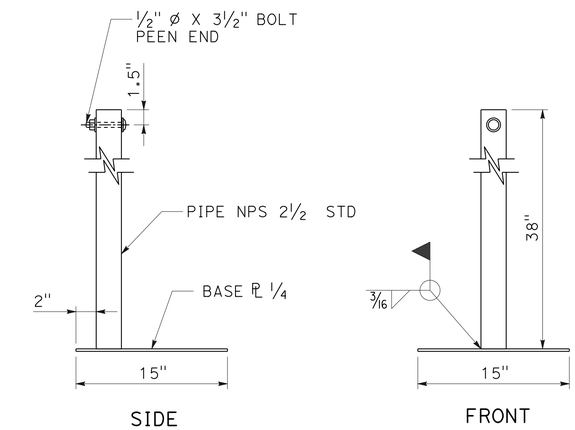

DETAIL A
CABLE RAILING POST BASE

CONSTRUCTION DETAILS
NO SCALE

C-1

REVISED BY	DATE REVISED

ED SPEER — JOHN L. MARTIN
CALCULATED-DESIGNED BY — CHECKED BY
FUNCTIONAL SUPERVISOR — JOHN L. MARTIN

STATE OF CALIFORNIA - DEPARTMENT OF TRANSPORTATION
Caltrans® **DESIGN**

P:\proj1\01\0a520_plans\pse\0100020425ga001.DGN

LAST REVISION 03-27-15 | DATE PLOTTED => 30-MAR-2015 | TIME PLOTTED => 08:28

Dist	COUNTY	ROUTE	POST MILES TOTAL PROJECT	SHEET No.	TOTAL SHEETS
01	HUM	299	R21.1/R21.5	9	76

Edward B Speer 03-27-15
REGISTERED CIVIL ENGINEER DATE

03-27-15
PLANS APPROVAL DATE

REGISTERED PROFESSIONAL ENGINEER
EDWARD B. SPEER
No. C49740
Exp. 09-30-16
CIVIL
STATE OF CALIFORNIA

THE STATE OF CALIFORNIA OR ITS OFFICERS OR AGENTS SHALL NOT BE RESPONSIBLE FOR THE ACCURACY OR COMPLETENESS OF SCANNED COPIES OF THIS PLAN SHEET.

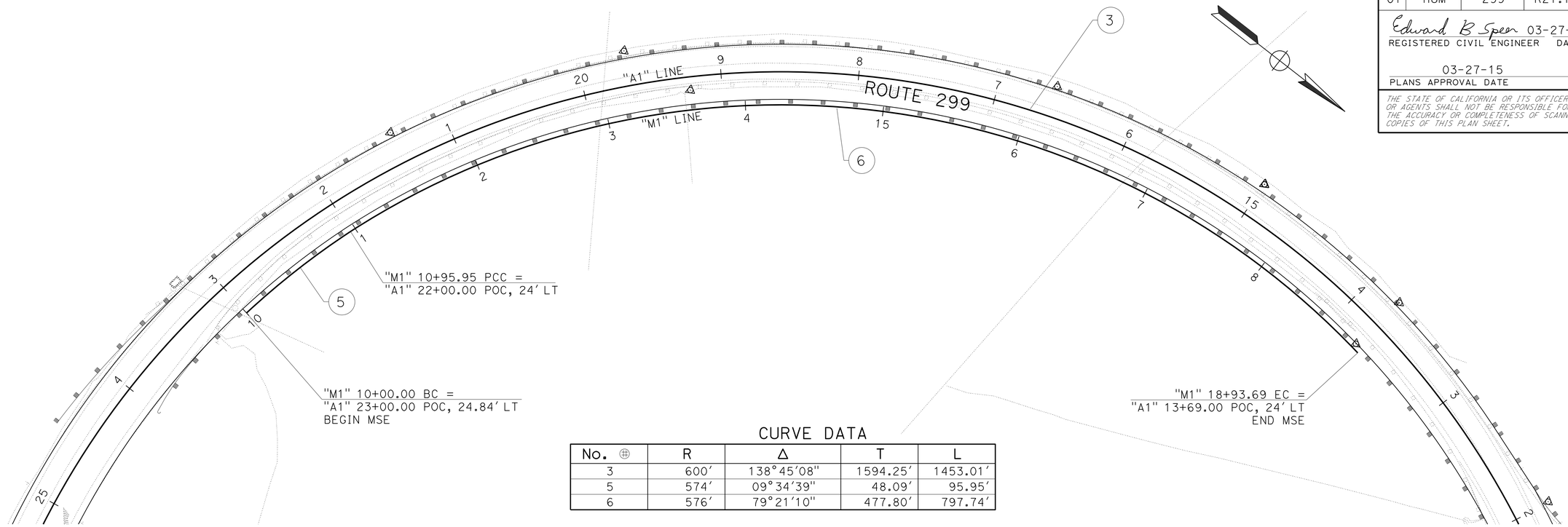

CURVE DATA

No.	R	Δ	T	L
3	600'	138°45'08"	1594.25'	1453.01'
5	574'	09°34'39"	48.09'	95.95'
6	576'	79°21'10"	477.80'	797.74'

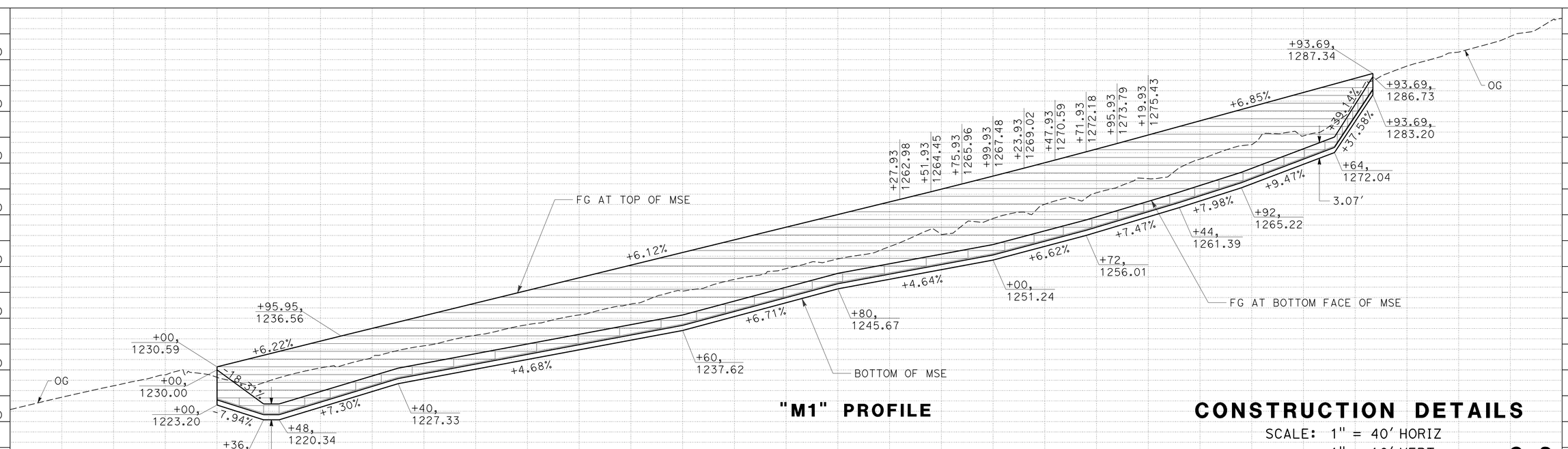

"M1" PROFILE

CONSTRUCTION DETAILS

SCALE: 1" = 40' HORIZ
1" = 10' VERT

C-2

REVISED BY	DATE REVISED
JOHN L. MARTIN	ED SPEER
CALCULATED-DESIGNED BY	CHECKED BY
FUNCTIONAL SUPERVISOR	JOHN L. MARTIN

STATE OF CALIFORNIA - DEPARTMENT OF TRANSPORTATION
Caltrans DESIGN

P:\proj1\01\0a520_plans\pse\0100020425ga002.DGN

LAST REVISION 03-27-15
DATE PLOTTED => 30-MAR-2015
TIME PLOTTED => 08:28

Dist	COUNTY	ROUTE	POST MILES TOTAL PROJECT	SHEET No.	TOTAL SHEETS
01	HUM	299	R21.1/R21.5	10	76

Edward B Speer 03-27-15
REGISTERED CIVIL ENGINEER DATE

03-27-15
PLANS APPROVAL DATE

REGISTERED PROFESSIONAL ENGINEER EDWARD B. SPEER No. C49740 Exp. 09-30-16 CIVIL STATE OF CALIFORNIA

THE STATE OF CALIFORNIA OR ITS OFFICERS OR AGENTS SHALL NOT BE RESPONSIBLE FOR THE ACCURACY OR COMPLETENESS OF SCANNED COPIES OF THIS PLAN SHEET.

NOTES:

1. SEE STD PLANS FOR DETAILS NOT SHOWN.
2. INTERNAL CONNECTING WIRE (13.5-GAGE) TO BE INSTALLED ACROSS WIDTH OF INTERIOR GABIONS AND ACROSS WIDTH AND LENGTH OF END GABIONS.
3. PREFORMED STIFFENERS (11-GAGE OR 9-GAGE) ARE AN ACCEPTABLE ALTERNATIVE TO INTERNAL CONNECTING WIRES. INSTALL THEM AS RECOMMENDED BY MANUFACTURER OR AS DIRECTED BY THE ENGINEER AT 1/2 POINTS.
4. PLACE ROCK IN END GABION CELL FIRST, AND CONTINUE BY FILLING INTERIOR GABION CELLS.

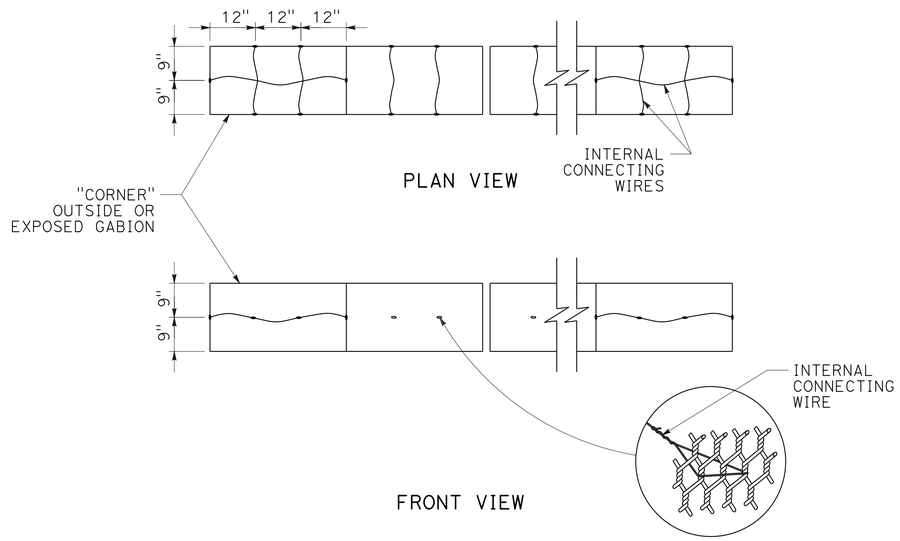

13.5-GAGE INTERNAL CONNECTING WIRES

NOTE:
AREA OF OPENING NOT TO EXCEED 10.3 SQUARE INCHES.

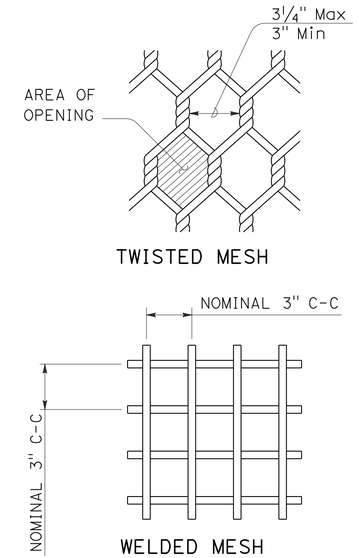

TYPICAL ACCEPTABLE MESH STYLES

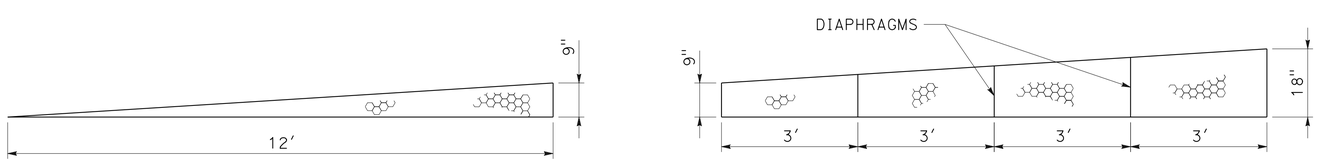

FRONT VIEW OF ASSEMBLED GABION CAP

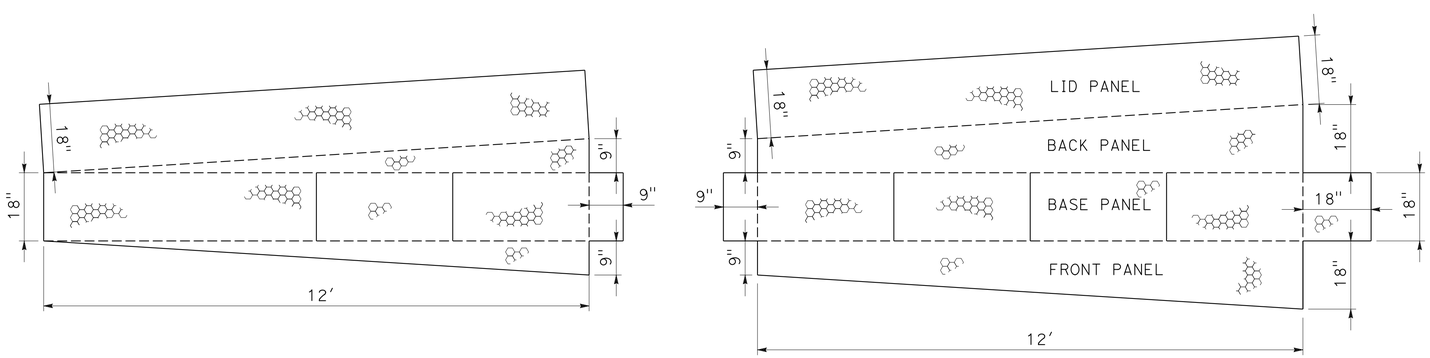

FLAT LAYOUT OF BASKET

GABION CAP

GABIONS FOR MSE FACING

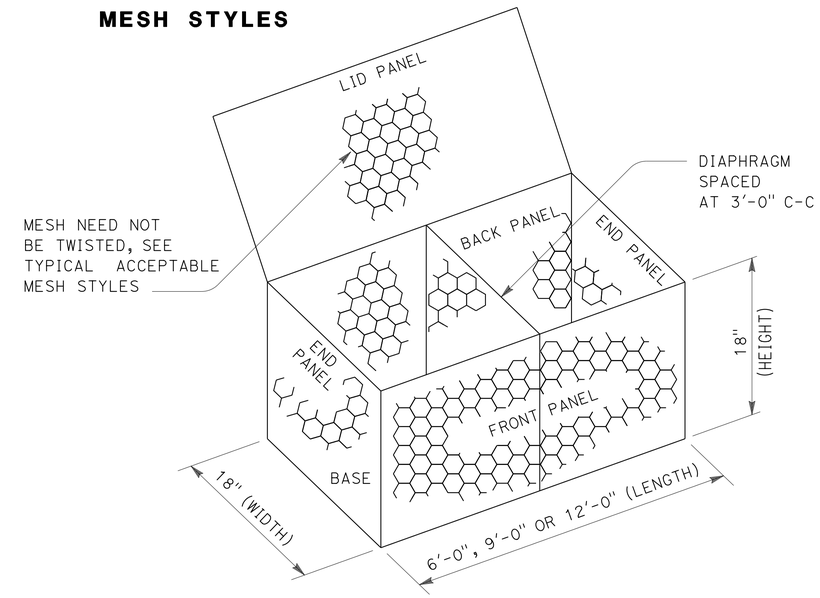

TYPICAL GABION BASKET

CONSTRUCTION DETAILS

NO SCALE

C-3

REVISED BY | DATE REVISED
ED SPEER | JOHN L. MARTIN
CALCULATED-DESIGNED BY | CHECKED BY
FUNCTIONAL SUPERVISOR | JOHN L. MARTIN
STATE OF CALIFORNIA - DEPARTMENT OF TRANSPORTATION
Caltrans® DESIGN

P:\proj1\01\0a520_plans\pse\0100020425ga003.DGN

LAST REVISION 03-27-15 | DATE PLOTTED => 30-MAR-2015 | TIME PLOTTED => 08:28

Dist	COUNTY	ROUTE	POST MILES TOTAL PROJECT	SHEET No.	TOTAL SHEETS
01	HUM	299	R21.1/R21.5	11	76

Edward B Speer 03-27-15
REGISTERED CIVIL ENGINEER DATE

03-27-15
PLANS APPROVAL DATE

REGISTERED PROFESSIONAL ENGINEER
EDWARD B. SPEER
No. C49740
Exp. 09-30-16
CIVIL
STATE OF CALIFORNIA

THE STATE OF CALIFORNIA OR ITS OFFICERS OR AGENTS SHALL NOT BE RESPONSIBLE FOR THE ACCURACY OR COMPLETENESS OF SCANNED COPIES OF THIS PLAN SHEET.

NOTE:
FOR DETAILS NOT SHOWN SEE STANDARD PLANS.

LEGEND:
FLOW DIRECTION

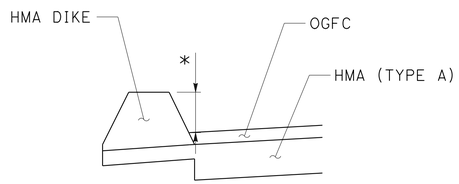

HMA DIKE WITH OPEN GRADED FRICTION COURSE

* TYPE A: 6"
TYPE F: 4"

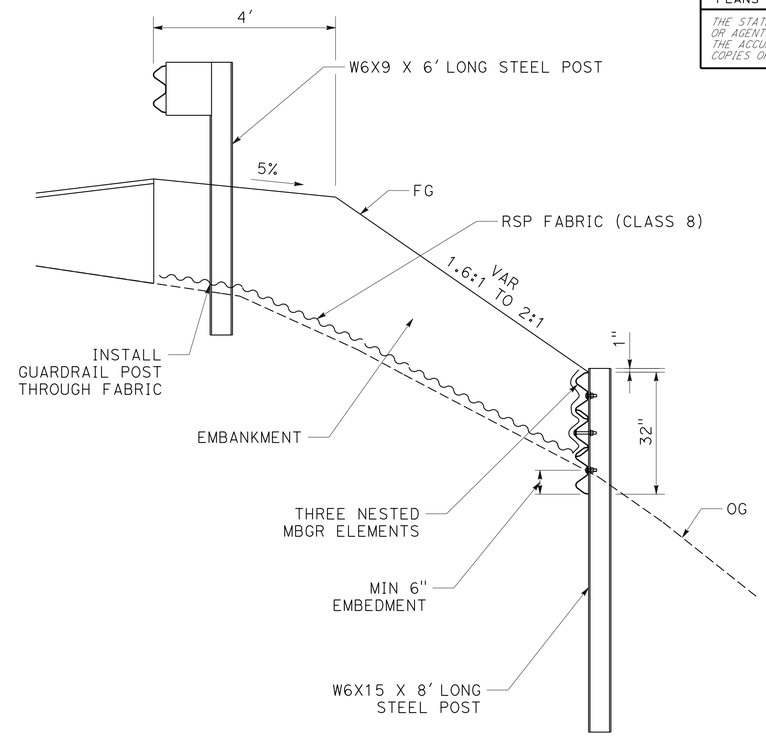

RAIL ELEMENT WALL

"A1" STA 13+16 TO "A1" STA 14+94 RT

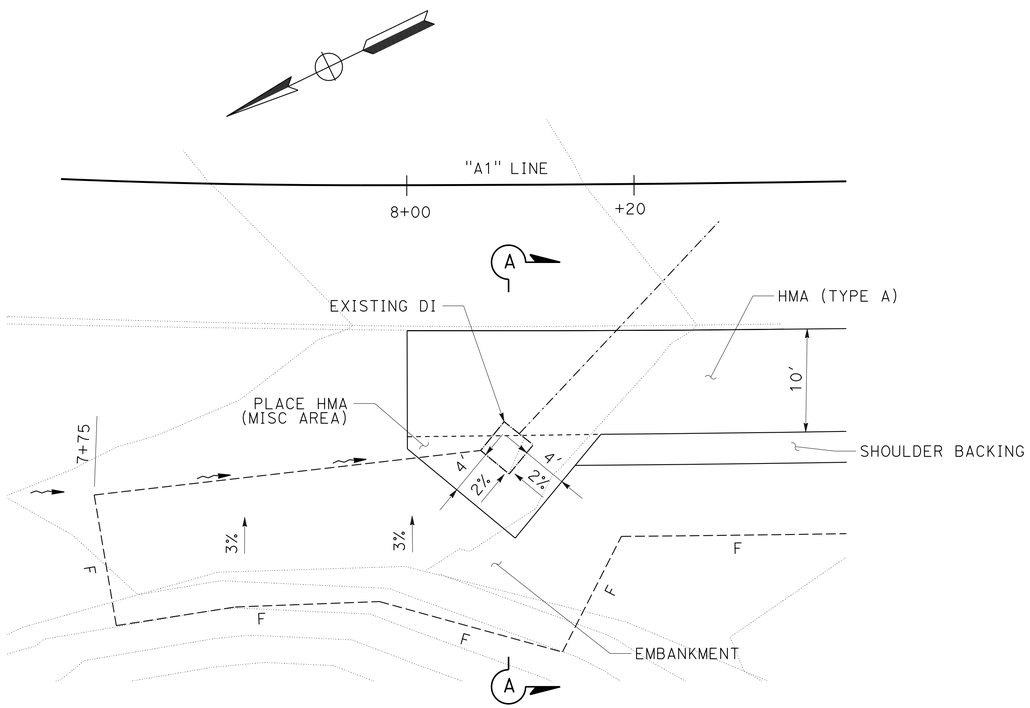

PLAN

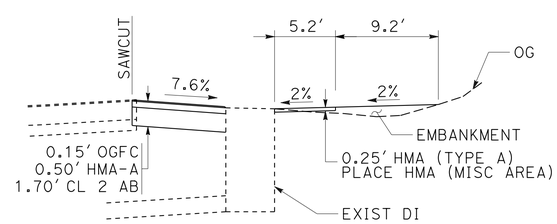

SECTION A-A

HMA APRON

CONSTRUCTION DETAILS

NO SCALE

C-4

REVISED BY | DATE REVISED
ED SPEER | JOHN L. MARTIN
CALCULATED-DESIGNED BY | CHECKED BY
FUNCTIONAL SUPERVISOR: JOHN L. MARTIN

STATE OF CALIFORNIA - DEPARTMENT OF TRANSPORTATION
Caltrans
DESIGN

P:\proj1\01\0a520_plans\pse\0100020425ga004.DGN

LAST REVISION | DATE PLOTTED => 30-MAR-2015
03-27-15 | TIME PLOTTED => 08:28

Dist	COUNTY	ROUTE	POST MILES TOTAL PROJECT	SHEET No.	TOTAL SHEETS
01	HUM	299	R21.1/R21.5	12	76

Edward B Speer 03-27-15
REGISTERED CIVIL ENGINEER DATE

03-27-15
PLANS APPROVAL DATE

REGISTERED PROFESSIONAL ENGINEER
EDWARD B. SPEER
No. C49740
Exp. 09-30-16
CIVIL
STATE OF CALIFORNIA

THE STATE OF CALIFORNIA OR ITS OFFICERS OR AGENTS SHALL NOT BE RESPONSIBLE FOR THE ACCURACY OR COMPLETENESS OF SCANNED COPIES OF THIS PLAN SHEET.

NOTES:

1. WHERE DIKE IS CONSTRUCTED UNDER GUARDRAIL, PLACE WEED CONTROL MAT (FIBER) TO BACK EDGE OF DIKE. WHERE PAVED SHOULDER IS CONSTRUCTED WITHIN 36" IN FRONT OF THE POST, PLACE WEED CONTROL MAT (FIBER) TO THE EDGE OF PAVED SHOULDER.

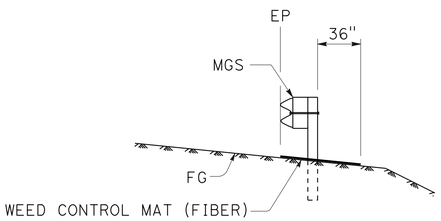

SECTION

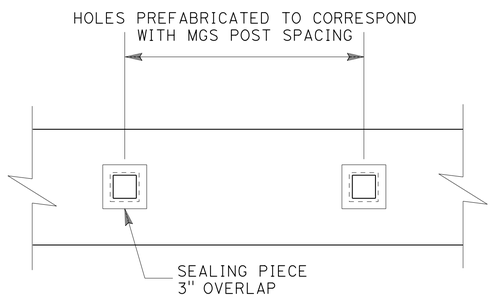

PLAN

DETAILS AT GUARDRAIL POSTS

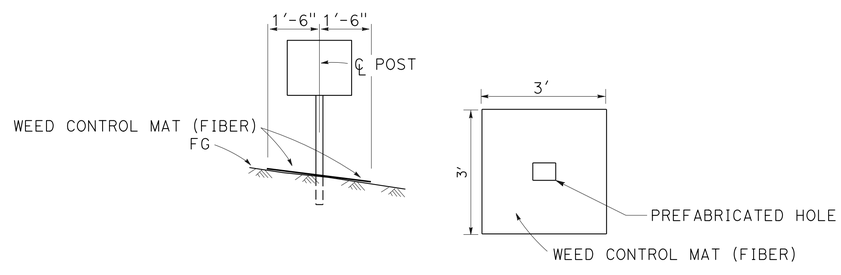

PLACEMENT UNDER ROADSIDE SIGN (ONE POST)

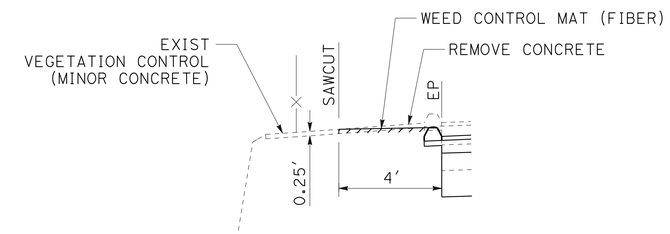

SECTION B-B

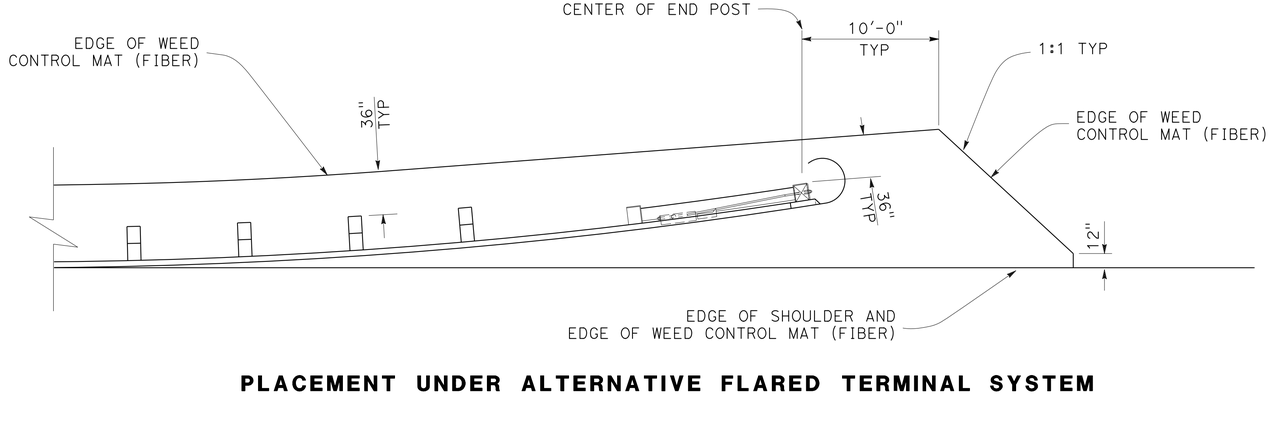

PLACEMENT UNDER ALTERNATIVE FLARED TERMINAL SYSTEM

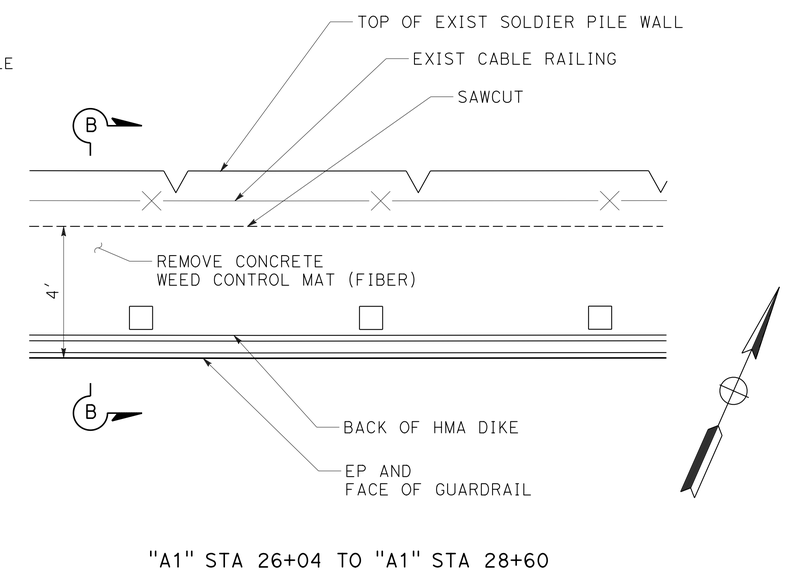

"A1" STA 26+04 TO "A1" STA 28+60

WEED CONTROL MAT (FIBER)

CONSTRUCTION DETAILS

NO SCALE

C-5

REVISED BY	DATE REVISED

JOLENA ASTIN — CALCULATED-DESIGNED BY
ED SPEER — CHECKED BY
JOHN L. MARTIN — FUNCTIONAL SUPERVISOR

STATE OF CALIFORNIA - DEPARTMENT OF TRANSPORTATION
Caltrans® DESIGN

P:\proj1\01\0a520_plans\pse\0100020425ga005.DGN

LAST REVISION 03-25-15 | DATE PLOTTED => 30-MAR-2015 | TIME PLOTTED => 08:28

Dist	COUNTY	ROUTE	POST MILES TOTAL PROJECT	SHEET No.	TOTAL SHEETS
01	HUM	299	R21.1/R21.5	13	76

Edward B Speer 03-27-15
REGISTERED CIVIL ENGINEER DATE

03-27-15
PLANS APPROVAL DATE

REGISTERED PROFESSIONAL ENGINEER
EDWARD B. SPEER
No. C49740
Exp. 09-30-16
CIVIL
STATE OF CALIFORNIA

THE STATE OF CALIFORNIA OR ITS OFFICERS OR AGENTS SHALL NOT BE RESPONSIBLE FOR THE ACCURACY OR COMPLETENESS OF SCANNED COPIES OF THIS PLAN SHEET.

NOTES:

1. RUMBLE STRIPS MUST BE CONSTRUCTED PRIOR TO INSTALLING FINAL TRAFFIC STRIPES.

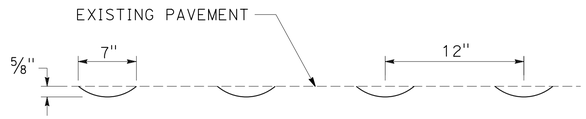

ELEVATION

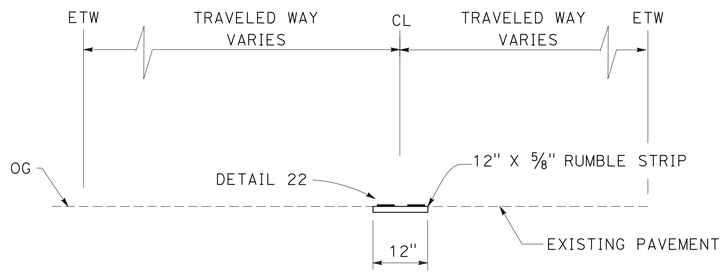

SECTION A-A

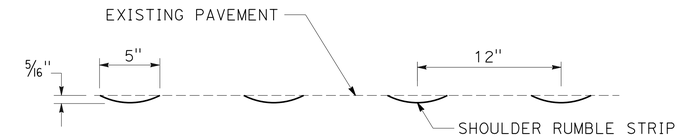

ELEVATION

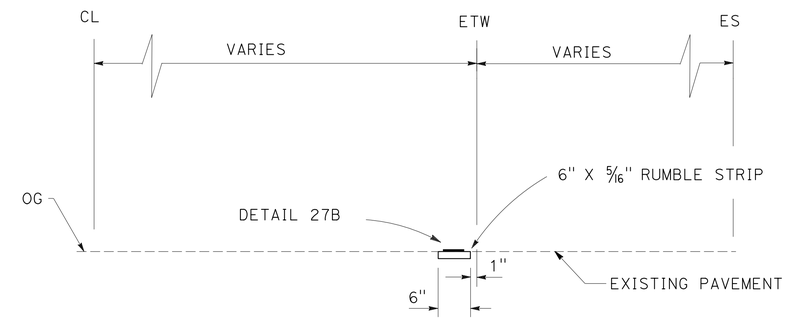

SECTION B-B

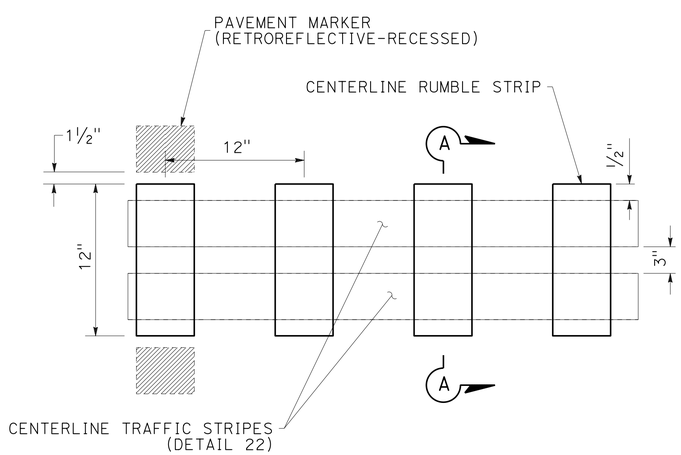

PLAN

CENTERLINE RUMBLE STRIP
(HMA, GROUND-IN INDENTATIONS)

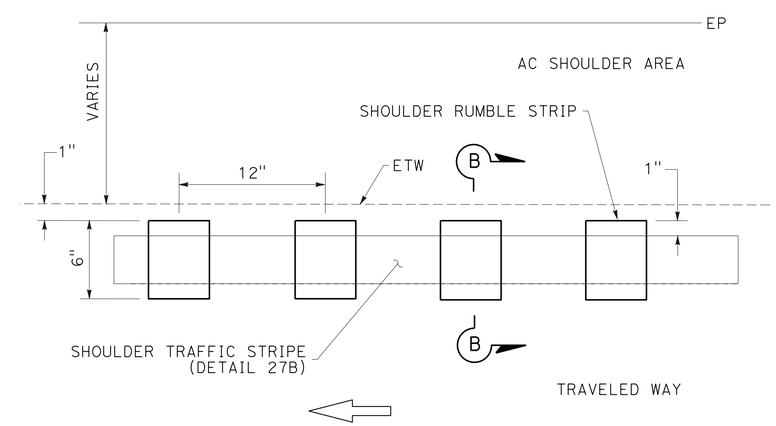

PLAN

SHOULDER RUMBLE STRIP
(HMA, GROUND-IN INDENTATIONS)

CONSTRUCTION DETAILS

NO SCALE

C-6

REVISED BY	DATE REVISED
BETH A. ELMORE	
ED SPEER	
CALCULATED-DESIGNED BY	
CHECKED BY	
FUNCTIONAL SUPERVISOR	
JOHN L. MARTIN	

STATE OF CALIFORNIA - DEPARTMENT OF TRANSPORTATION
Caltrans
DESIGN

P:\proj1\01\0a520_plans\pse\0100020425ga006.dgn

LAST REVISION 03-27-15 | DATE PLOTTED => 30-MAR-2015 | TIME PLOTTED => 08:28

Dist	COUNTY	ROUTE	POST MILES TOTAL PROJECT	SHEET No.	TOTAL SHEETS
01	HUM	299	R21.1/R21.5	14	76

Edward B Speer 03-27-15
REGISTERED CIVIL ENGINEER DATE

03-27-15
PLANS APPROVAL DATE

REGISTERED PROFESSIONAL ENGINEER
EDWARD B. SPEER
No. C49740
Exp. 09-30-16
CIVIL
STATE OF CALIFORNIA

THE STATE OF CALIFORNIA OR ITS OFFICERS OR AGENTS SHALL NOT BE RESPONSIBLE FOR THE ACCURACY OR COMPLETENESS OF SCANNED COPIES OF THIS PLAN SHEET.

ABBREVIATIONS:

(E) EXISTING

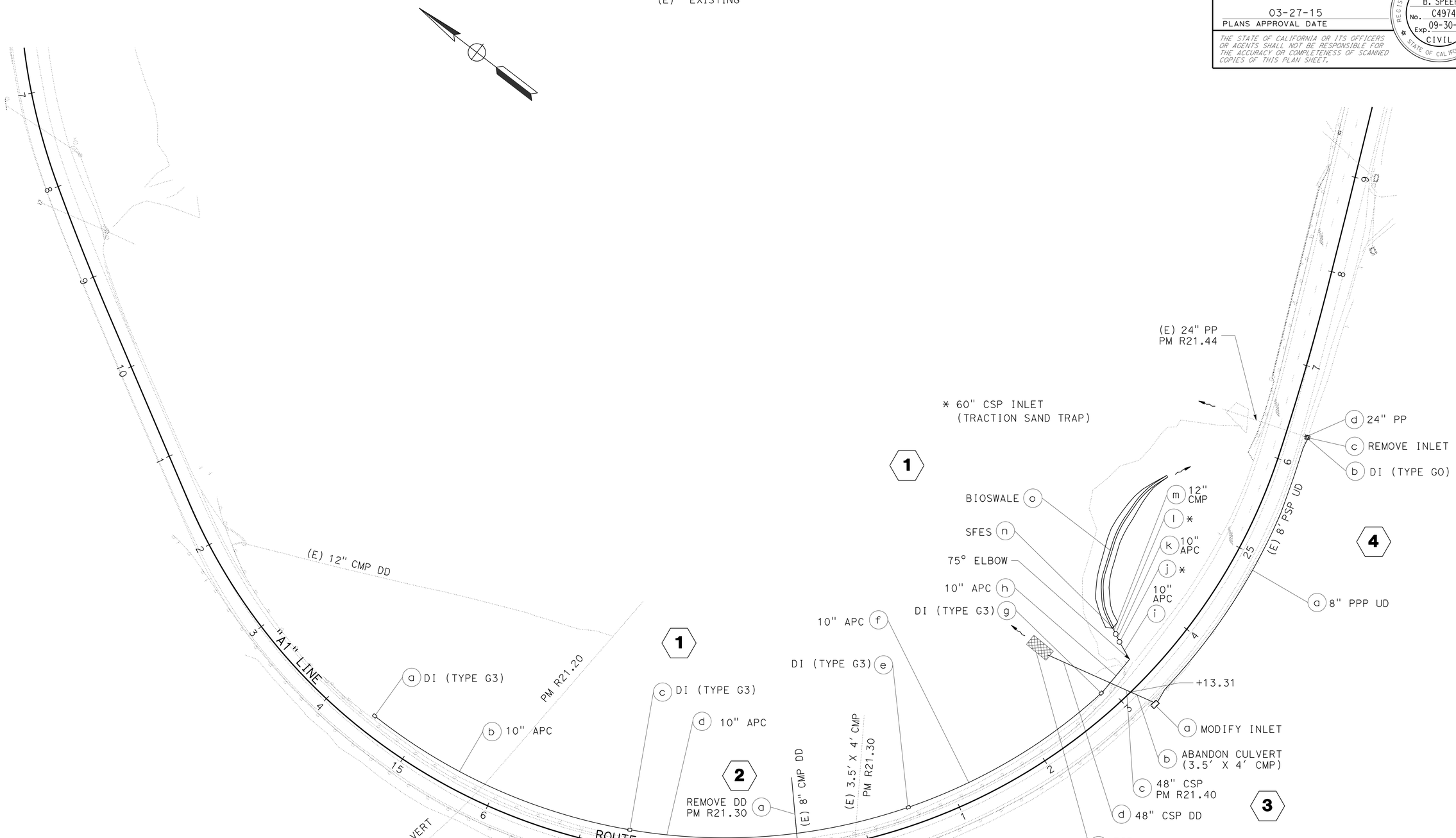

DRAINAGE PLAN

SCALE: 1" = 50'

D-1

APPROVED FOR DRAINAGE WORK ONLY

REVISED BY	DATE REVISED

ED SPEER — JOHN L. MARTIN

CALCULATED-DESIGNED BY — CHECKED BY

FUNCTIONAL SUPERVISOR: JOHN L. MARTIN

STATE OF CALIFORNIA - DEPARTMENT OF TRANSPORTATION

Caltrans® DESIGN

P:\proj1\01\0a520_plans\pse\0100020425ia001.DGN

LAST REVISION 09-03-19 | DATE PLOTTED => 30-MAR-2015 | TIME PLOTTED => 08:28

Dist	COUNTY	ROUTE	POST MILES TOTAL PROJECT	SHEET No.	TOTAL SHEETS
01	HUM	299	R21.1/R21.5	15	76

Edward B Speer 03-27-15
REGISTERED CIVIL ENGINEER DATE

03-27-15
PLANS APPROVAL DATE

REGISTERED PROFESSIONAL ENGINEER
EDWARD B. SPEER
No. C49740
Exp. 09-30-16
CIVIL
STATE OF CALIFORNIA

THE STATE OF CALIFORNIA OR ITS OFFICERS OR AGENTS SHALL NOT BE RESPONSIBLE FOR THE ACCURACY OR COMPLETENESS OF SCANNED COPIES OF THIS PLAN SHEET.

NOTE:

TOP OF HMA (TYPE A) MATCHES TYPE G3 INLET GRATES

LEGEND

GFL GRATE FLOW LINE

SEE LAYOUT SHEET FOR HMA DIKE LOCATIONS

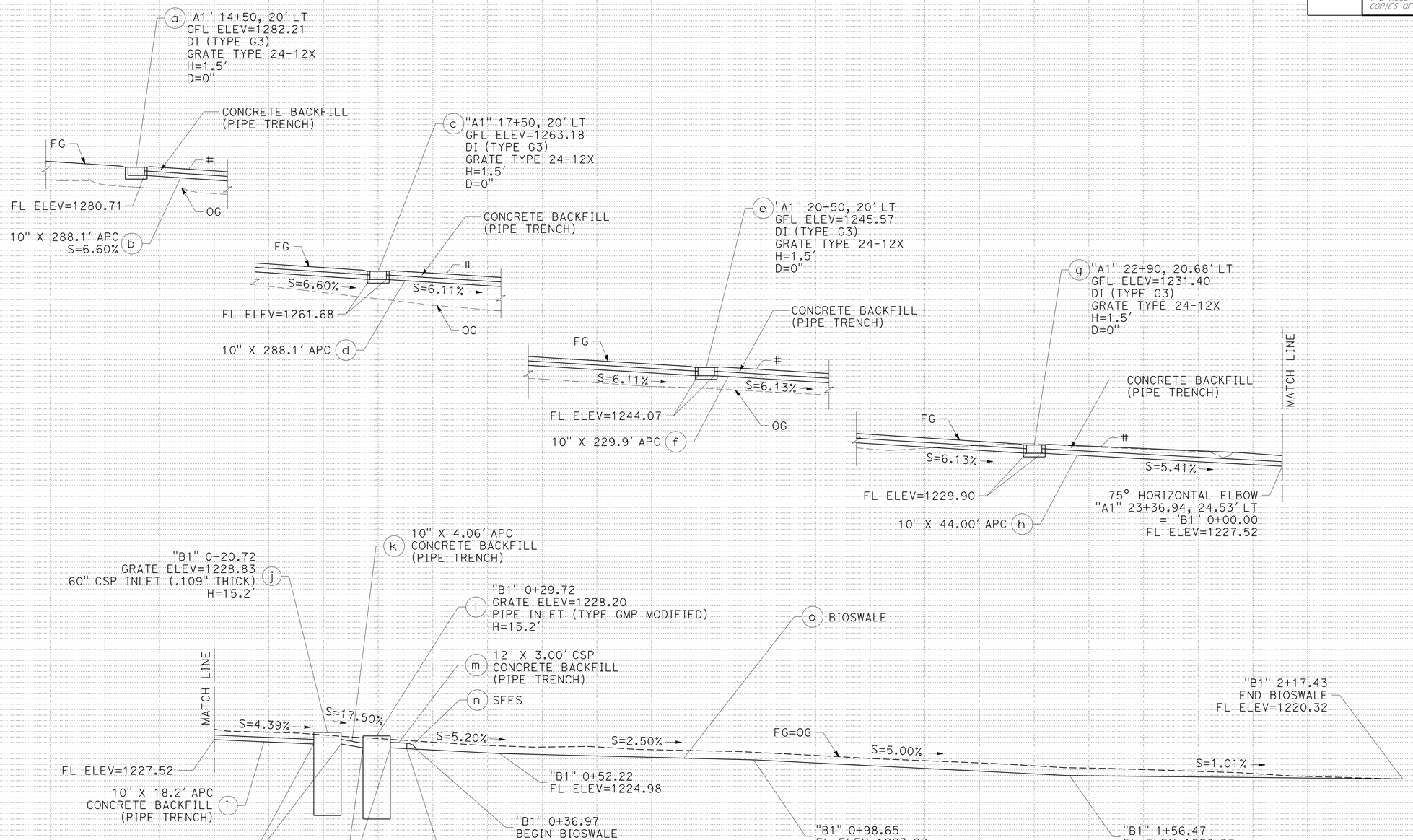

DRAINAGE SYSTEM NO. 1

"A1" 14+50, 19' LT TO "B1" 2+17.43

DRAINAGE PROFILES

SCALE: 1" = 10'

DP-1

REVISED BY | DATE REVISED
ED SPEER | JOHN L. MARTIN
CALCULATED-DESIGNED BY | CHECKED BY
FUNCTIONAL SUPERVISOR
JOHN L. MARTIN

STATE OF CALIFORNIA - DEPARTMENT OF TRANSPORTATION
Caltrans
DESIGN

P:\proj101\0a520_plans\pse\0100020425ib001.DGN

LAST REVISION DATE PLOTTED => 30-MAR-2015
03-27-15 TIME PLOTTED => 08:28

BORDER LAST REVISED 7/2/2010
USERNAME => s115152
DGN FILE => 0100020425ib001.DGN
RELATIVE BORDER SCALE IS IN INCHES 0 1 2 3
UNIT 0315
PROJECT NUMBER & PHASE 0100020425-1
EA 01-0A5201

Dist	COUNTY	ROUTE	POST MILES TOTAL PROJECT	SHEET No.	TOTAL SHEETS
01	HUM	299	R21.1/R21.5	16	76

Edward B Speer 03-27-15
REGISTERED CIVIL ENGINEER DATE

03-27-15
PLANS APPROVAL DATE

REGISTERED PROFESSIONAL ENGINEER
EDWARD B. SPEER
No. C49740
Exp. 09-30-16
CIVIL
STATE OF CALIFORNIA

THE STATE OF CALIFORNIA OR ITS OFFICERS OR AGENTS SHALL NOT BE RESPONSIBLE FOR THE ACCURACY OR COMPLETENESS OF SCANNED COPIES OF THIS PLAN SHEET.

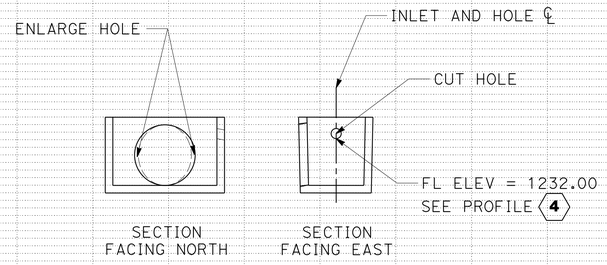

(a) MODIFY INLET
NO SCALE

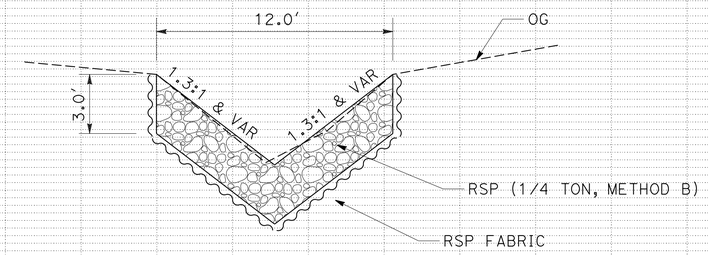

SECTION
(e) RSP
NO SCALE

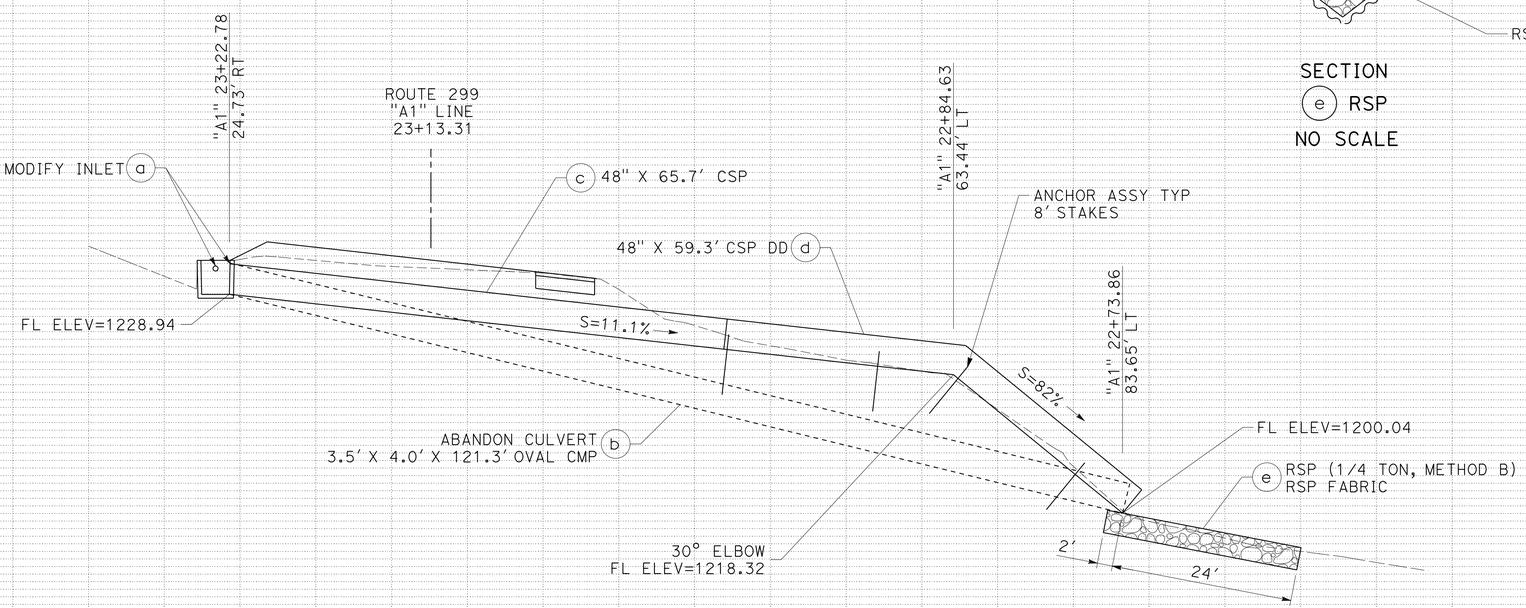

SCALE: 1" = 50'

DRAINAGE SYSTEM NO. 3

"A1" 23+13.31
SKEW 21°48' LEFT

DRAINAGE PROFILES

SCALE AS SHOWN

DP-2

REVISED BY | DATE REVISED
ED SPEER | JOHN L. MARTIN
CALCULATED-DESIGNED BY | CHECKED BY
FUNCTIONAL SUPERVISOR
JOHN L. MARTIN

STATE OF CALIFORNIA - DEPARTMENT OF TRANSPORTATION
Caltrans
DESIGN

P:\proj1\01\0a520_plans\pse\0100020425ib002.DGN

LAST REVISION | DATE PLOTTED => 30-MAR-2015
03-27-15 | TIME PLOTTED => 08:28

Dist	COUNTY	ROUTE	POST MILES TOTAL PROJECT	SHEET No.	TOTAL SHEETS
01	HUM	299	R21.1/R21.5	17	76

Edward B Speer 03-27-15
REGISTERED CIVIL ENGINEER DATE

03-27-15
PLANS APPROVAL DATE

REGISTERED PROFESSIONAL ENGINEER
EDWARD B. SPEER
No. C49740
Exp. 09-30-16
CIVIL
STATE OF CALIFORNIA

THE STATE OF CALIFORNIA OR ITS OFFICERS OR AGENTS SHALL NOT BE RESPONSIBLE FOR THE ACCURACY OR COMPLETENESS OF SCANNED COPIES OF THIS PLAN SHEET.

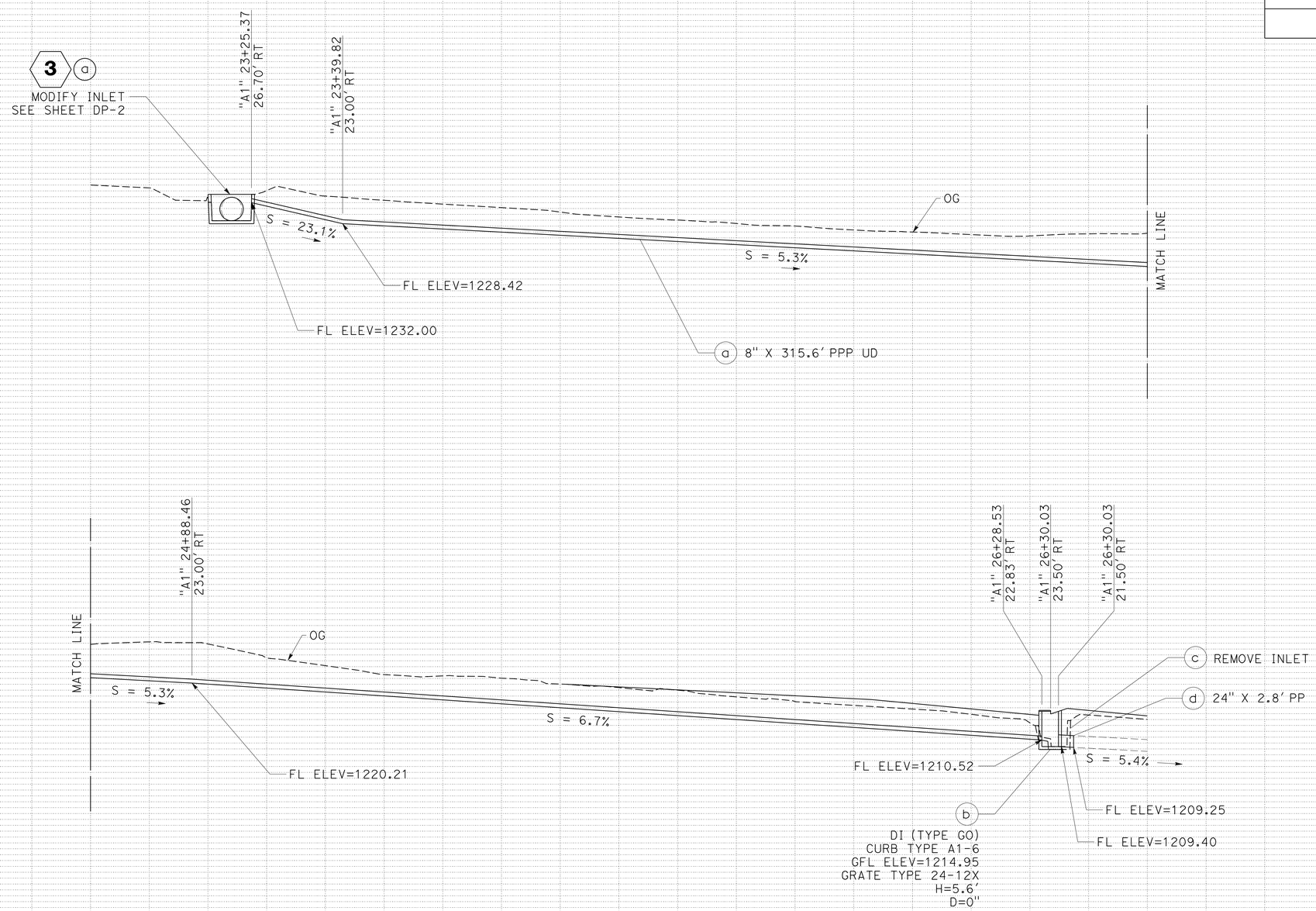

DRAINAGE SYSTEM NO. 4

"A1" 23+25 TO "A1" 26+30 RT

DRAINAGE PROFILES

SCALE: 1" = 10'

DP-3

REVISED BY | DATE REVISED
ED SPEER | JOHN L. MARTIN
CALCULATED-DESIGNED BY | CHECKED BY
FUNCTIONAL SUPERVISOR
JOHN L. MARTIN

STATE OF CALIFORNIA - DEPARTMENT OF TRANSPORTATION
Caltrans
DESIGN

P:\proj1\01\0a520_plans\pse\0100020425ib003.dgn

LAST REVISION 03-27-15 | DATE PLOTTED => 30-MAR-2015 TIME PLOTTED => 08:28

Dist	COUNTY	ROUTE	POST MILES TOTAL PROJECT	SHEET No.	TOTAL SHEETS
01	HUM	299	R21.1/R21.5	18	76

Edward B Speer 03-27-15
REGISTERED CIVIL ENGINEER DATE

03-27-15
PLANS APPROVAL DATE

REGISTERED PROFESSIONAL ENGINEER
EDWARD B. SPEER
No. C49740
Exp. 09-30-16
CIVIL
STATE OF CALIFORNIA

THE STATE OF CALIFORNIA OR ITS OFFICERS OR AGENTS SHALL NOT BE RESPONSIBLE FOR THE ACCURACY OR COMPLETENESS OF SCANNED COPIES OF THIS PLAN SHEET.

CURVE DATA

No. ⊕	R	Δ	T	L
22	50.00′	22°35′38"	9.99′	19.72′
23	50.00′	19°58′51"	8.81′	17.44′
24	100.00′	17°30′25"	15.40′	30.56′
25	80.00′	23°32′14"	16.67′	32.86′

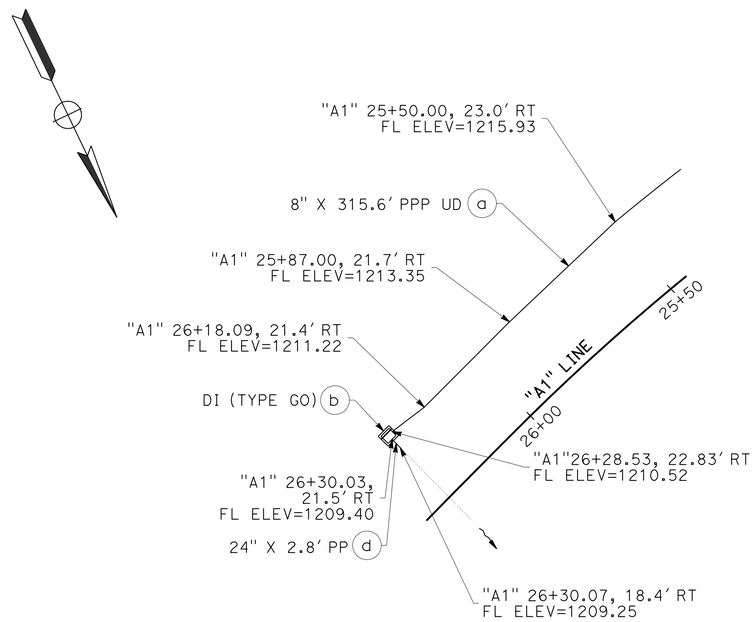

DRAINAGE SYSTEM 4

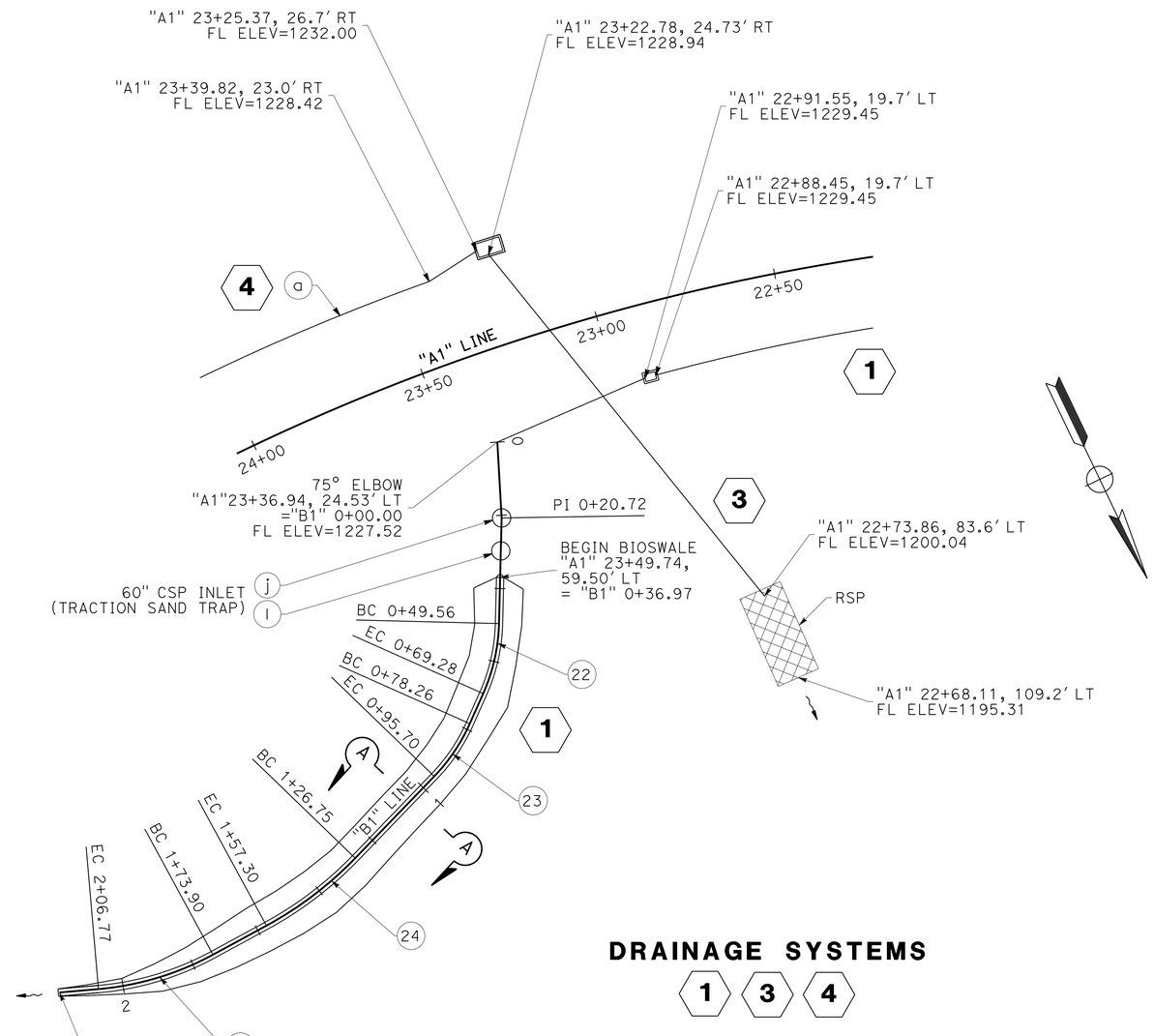

DRAINAGE SYSTEMS
1 3 4

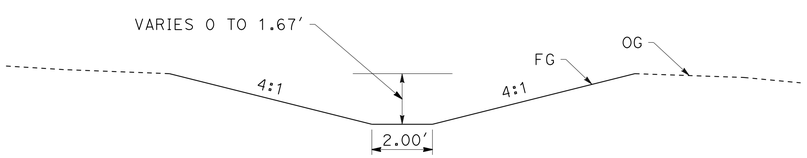

SEE SHEET EC-3 FOR BIOSWALE DETAILS

SECTION A-A

DRAINAGE DETAILS

NO SCALE

DD-1

REVISED BY	DATE REVISED

CALCULATED-DESIGNED BY: ED SPEER
CHECKED BY: JOHN L. MARTIN
FUNCTIONAL SUPERVISOR: JOHN L. MARTIN

STATE OF CALIFORNIA - DEPARTMENT OF TRANSPORTATION
Caltrans
DESIGN

P:\proj1\01\0a520_plans\pse\0100020425ic001.DGN

LAST REVISION 03-27-15 | DATE PLOTTED => 30-MAR-2015 | TIME PLOTTED => 08:28

Dist	COUNTY	ROUTE	POST MILES TOTAL PROJECT	SHEET No.	TOTAL SHEETS
01	HUM	299	R21.1/R21.5	19	76

Edward B Speer 03-27-15
REGISTERED CIVIL ENGINEER DATE

03-27-15
PLANS APPROVAL DATE

REGISTERED PROFESSIONAL ENGINEER
EDWARD B. SPEER
No. C49740
Exp. 09-30-16
CIVIL
STATE OF CALIFORNIA

THE STATE OF CALIFORNIA OR ITS OFFICERS OR AGENTS SHALL NOT BE RESPONSIBLE FOR THE ACCURACY OR COMPLETENESS OF SCANNED COPIES OF THIS PLAN SHEET.

NOTE:

FOR DETAILS NOT SHOWN SEE STANDARD PLANS

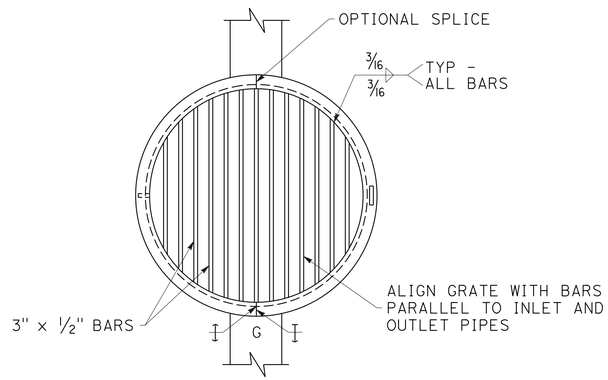

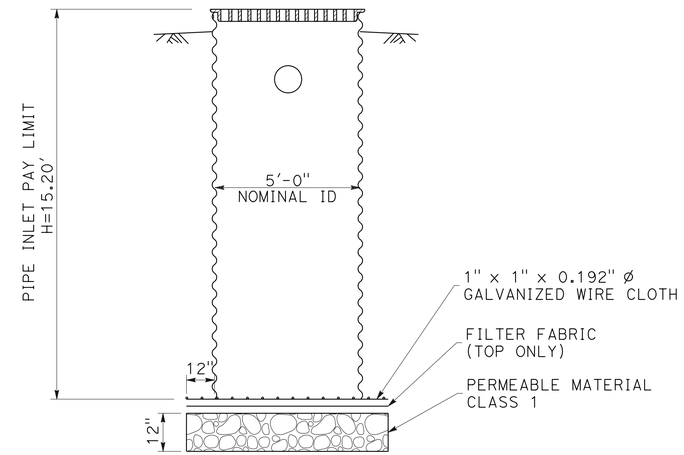

ELEVATION

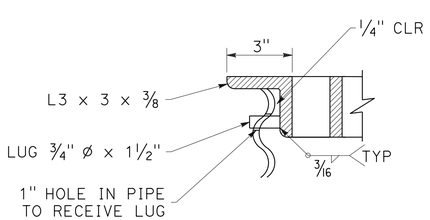

DETAIL "A"

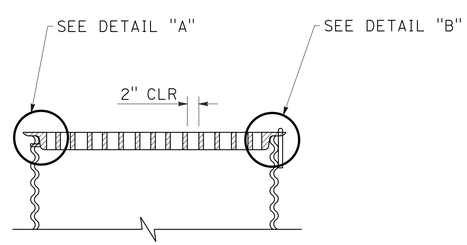

GRATE DETAILS

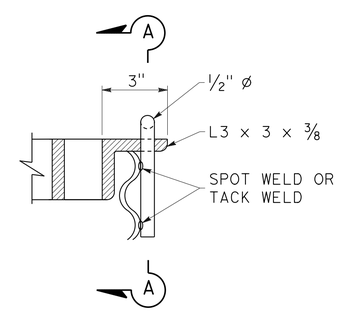

DETAIL "B"

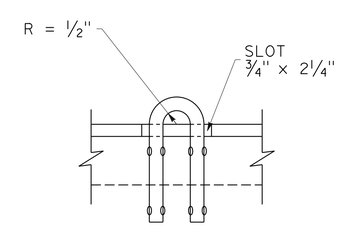

SECTION A-A

TRACTION SAND TRAP

DRAINAGE DETAILS
NO SCALE

DD-2

REVISED BY	DATE REVISED

CALCULATED-DESIGNED BY	CHECKED BY
ED SPEER	JOHN L. MARTIN

FUNCTIONAL SUPERVISOR: JOHN L. MARTIN

STATE OF CALIFORNIA - DEPARTMENT OF TRANSPORTATION
Caltrans® DESIGN

P:\proj1\01\0a520_plans\pse\0100020425ic002.DGN

LAST REVISION 03-27-15 | DATE PLOTTED => 30-MAR-2015 | TIME PLOTTED => 08:28

Dist	COUNTY	ROUTE	POST MILES TOTAL PROJECT	SHEET No.	TOTAL SHEETS
01	HUM	299	R21.1/R21.5	20	76

Edward B Speer 03-27-15
REGISTERED CIVIL ENGINEER DATE

03-27-15
PLANS APPROVAL DATE

REGISTERED PROFESSIONAL ENGINEER EDWARD B. SPEER No. C49740 Exp. 09-30-16 CIVIL STATE OF CALIFORNIA

THE STATE OF CALIFORNIA OR ITS OFFICERS OR AGENTS SHALL NOT BE RESPONSIBLE FOR THE ACCURACY OR COMPLETENESS OF SCANNED COPIES OF THIS PLAN SHEET.

NOTES:

1. "T" = WALL THICKNESS (INCHES) REQUIRED BEFORE APPLICATION OF COATING/LINING REQUIREMENT
2. REINFORCED CONCRETE PIPE, TYPE II MODIFIED OR TYPE 1P CEMENT WITH A MAXIMUM WATER-TO-CEMENT RATIO OF 0.45. ALL PIPE MUST MEET THE GENERAL PIPE JOINT REQUIREMENTS FOR THIS PROJECT
3. APPLY COATING/LINING TREATMENT TO BOTH INTERIOR AND EXTERIOR OF CULVERT PIPE IN ACCORDANCE WITH SPECIFICATIONS
4. ALL CULVERT PIPES SHALL HAVE POSITIVE WATERTIGHT JOINTS, EXCEPT WHERE EXPLICITLY STATED ON THE DRAINAGE PROFILES
5. (N) NOT A SEPARATE PAY ITEM, FOR INFORMATION ONLY

ALTERNATIVE PIPE CULVERT
ALLOWABLE PIPE MATERIAL AND PROTECTION

DESIGNATION	RCP[2]	CSP (TYPE 1)		PP	PP(UD)
		T[1] (IN)	COATING LINING[3]	TYPE	
10"	YES	0.109	POLYMERIC COATING	S	YES

DRAINAGE PROFILE OR DRAINAGE DETAIL SHEET NO.	DRAINAGE SYSTEM NO. ⬡	DRAINAGE UNIT NO. ◯	ABANDON CULVERT (EA)	REMOVE INLET	REMOVE DOWNDRAIN (EA)	MODIFY INLET	SAND BACKFILL	CONCRETE BACKFILL (PIPE TRENCH)	MINOR CONCRETE (MINOR STRUCTURE)	60" CSP INLET (.109" THICK)	24" PLASTIC PIPE	10" ALTERNATIVE PIPE CULVERT	12" CORRUGATED STEEL PIPE (.079" THICK)	12" STEEL FLARED END SECTION	48" CORRUGATED STEEL PIPE (.109" THICK)	8" PERFORATED PLASTIC PIPE UNDERDRAIN	48" CORRUGATED STEEL PIPE DOWNDRAIN (.109" THICK)	ROCK SLOPE PROTECTION (1/4 T, METHOD B) (CY)	ROCK SLOPE PROTECTION FABRIC (CLASS 8)	MISCELLANEOUS IRON AND STEEL	DITCH EXCAVATION	(N) PERMEABLE MATERIAL CLASS 1	(N) FILTER FABRIC	MAX. COVER	DRAINAGE SYSTEM NO. ⬡	DRAINAGE UNIT NO. ◯	ALIGNMENT	STATION	DESCRIPTION
			EA	EA	EA	EA	CY	CY	CY	LF	LF	LF	LF	EA	LF	LF	LF	CY	SQYD	LB	CY	CY	SQYD	FT					
DP-1	1	a							1.03											239					1	a	A1	14+50.00	TYPE G3 DI, GRATE TYPE 24-12X
DP-1	1	b						21.0				288.1												0.9	1	b	A1	14+50.00	10" X 288.1' APC
DP-1	1	c							1.03											239					1	c	A1	17+50.00	TYPE G3 DI, GRATE TYPE 24-12X
DP-1	1	d						21.0				288.1												0.9	1	d	A1	17+50.00	10" X 288.1' APC
DP-1	1	e							1.03											239					1	e	A1	20+50.00	TYPE G3 DI, GRATE TYPE 24-12X
DP-1	1	f						16.8				229.9												0.9	1	f	A1	20+50.00	10" X 229.9' APC
DP-1	1	g							1.03											239					1	g	A1	22+90.00	TYPE G3 DI, GRATE TYPE 24-12X
DP-1	1	h						3.2				44.0												0.9	1	h	A1	23+14.15	10" X 44.0' APC
DP-1	1	i						1.8				18.2												1.0	1	i	B1	0+09.11	10" X 18.2' APC
DP-1	1	j								15.2										575		2.9	8.6		1	j	B1	0+20.72	TRACTION SAND TRAP
DP-1	1	k						0.4				4.1												1.0	1	k	B1	0+25.22	10" X 4.1' APC
DP-1	1	l								15.2										575					1	l	B1	0+29.72	TRACTION SAND TRAP
DP-1	1	m						0.3					3.0											0.5	1	m	B1	0+33.75	12" X 30.0' CSP
DP-1	1	n												1											1	n	B1	0+35.22	12" STEEL FLARED END SECTION
DP-1	1	o																			176				1	o	B1	1+27.20	BIOFILTRATION SWALE *
DD-2	2	a			1																				2	a	A1	19+27.69	REMOVE 8" X 80' DOWNDRAIN
DP-2	3	a				1																			3	a	A1	23+22.78	MODIFY INLET
DP-2	3	b	1				49.4																		3	b	A1	23+22.78	ABANDON CULVERT
DP-2	3	c													65.7									3.4	3	c	A1	23+22.78	48" X 65.7' CSP
DP-2	3	d															59.3								3	d	A1	23+22.78	48" X 59.3' CSP DD
DP-2	3	e																34.7	99						3	e	A1	22+73.86	RSP (1/4 TON, METHOD B), RSP FABRIC
DP-3	4	a														315.6						133		6.3	4	a	A1	26+30.03	8" X 315.6' PPP UD
DP-3	4	b							1.85											239					4	b	A1	26+30.03	TYPE GO DI, GRATE TYPE 24-12X
DP-3	4	c		1																					4	c	A1	26+30.03	REMOVE INLET, TYPE GO, H=4.4'
DP-3	4	d									2.8														4	d	A1	26+30.03	24" X 2.8' PP
		TOTAL	1	1	1	1	49.4	64.5	5.97	30.4	2.8	872.4	3.0	1	65.7	315.6	59.3	34.7	99	2345	176	135.9	8.6						

* SEE SHEET ECQ-1 FOR BIOFILTRATION SWALE PAY QUANTITIES

DRAINAGE QUANTITIES
DQ-1

CALCULATED-DESIGNED BY	ED SPEER	REVISED BY
CHECKED BY	JOHN L. MARTIN	DATE REVISED
FUNCTIONAL SUPERVISOR	JOHN L. MARTIN	

STATE OF CALIFORNIA - DEPARTMENT OF TRANSPORTATION
Caltrans DESIGN

P:\proj1\01\0a520_plans\pse\0100020425id001.DGN

LAST REVISION 03-27-15 | DATE PLOTTED => 30-MAR-2015 | TIME PLOTTED => 08:28

Dist	COUNTY	ROUTE	POST MILES TOTAL PROJECT	SHEET No.	TOTAL SHEETS
01	HUM	299	R21.1/R21.5	21	76

Edward B Speer 03-27-15
REGISTERED CIVIL ENGINEER DATE

03-27-15
PLANS APPROVAL DATE

REGISTERED PROFESSIONAL ENGINEER
EDWARD B. SPEER
No. C49740
Exp. 09-30-16
CIVIL
STATE OF CALIFORNIA

THE STATE OF CALIFORNIA OR ITS OFFICERS OR AGENTS SHALL NOT BE RESPONSIBLE FOR THE ACCURACY OR COMPLETENESS OF SCANNED COPIES OF THIS PLAN SHEET.

NOTES:

1. SIGN Ⓖ MATCHES LIMIT LINES FOR STAGE 2 CONSTRUCTION. EXACT LOCATION OF ALL OTHER SIGNS TO BE DETERMINED BY THE ENGINEER.
2. CALIFORNIA CODES ARE DESIGNATED BY (CA), OTHERWISE FEDERAL CODES ARE SHOWN.
3. ALL CONSTRUCTION AREA SIGNS EXCEPT C40(CA) SHALL HAVE A BLACK LEGEND WITH AN ORANGE BACKGROUND.
4. SIGN Ⓖ TO BE MOUNTED ON ILLUMINATED POST.
5. SIGN Ⓔ, Ⓕ, Ⓖ, AND Ⓗ TO REMAIN COVERED UNLESS THE TEMPORARY SIGNAL IS IN OPERATION.
6. SEE ELECTRICAL PLANS FOR DETAILS OF TEMPORARY FLASHING BEACONS.

LEGEND: CONSTRUCTION AREA SIGNS (STATIONARY MOUNTED)

☼ TEMPORARY FLASHING BEACON (SOLAR POWERED)

◯	TYPE	PANEL SIZE	SIGN MESSAGE	NUMBER AND SIZE OF POSTS	No. OF SIGNS
A	C40(CA)	108" x 42"	TRAFFIC FINES DOUBLED IN CONSTRUCTION ZONES	2 - 6" x 6"	2
B	W20-1 C23B(CA)	36" x 36" 36" x 18"	ROAD WORK AHEAD CURVE IMPROVEMENT	1 - 4" x 6"	2
C	R4-11	30" x 30"	BICYCLE (SYMBOL) MAY USE FULL LANE	1 - 4" x 4"	2
D	G20-2	36" x 18"	END ROAD WORK	1 - 4" x 4"	2
E	W20-4	36" x 36"	ONE LANE ROAD AHEAD	1 - 4" x 6"	2
F	W3-3 W16-2P	36" x 36" 24" x 18"	SIGNAL SYMBOL 500 FEET	1 - 4" X 6"	2
G	R10-6	24" x 36"	STOP HERE ON RED (ILLUMINATED)	1 - 4" x 4"	2
H	W1-4	36" x 36"	RIGHT SHIFT (SYMBOL)	1 - 4" x 6"	1

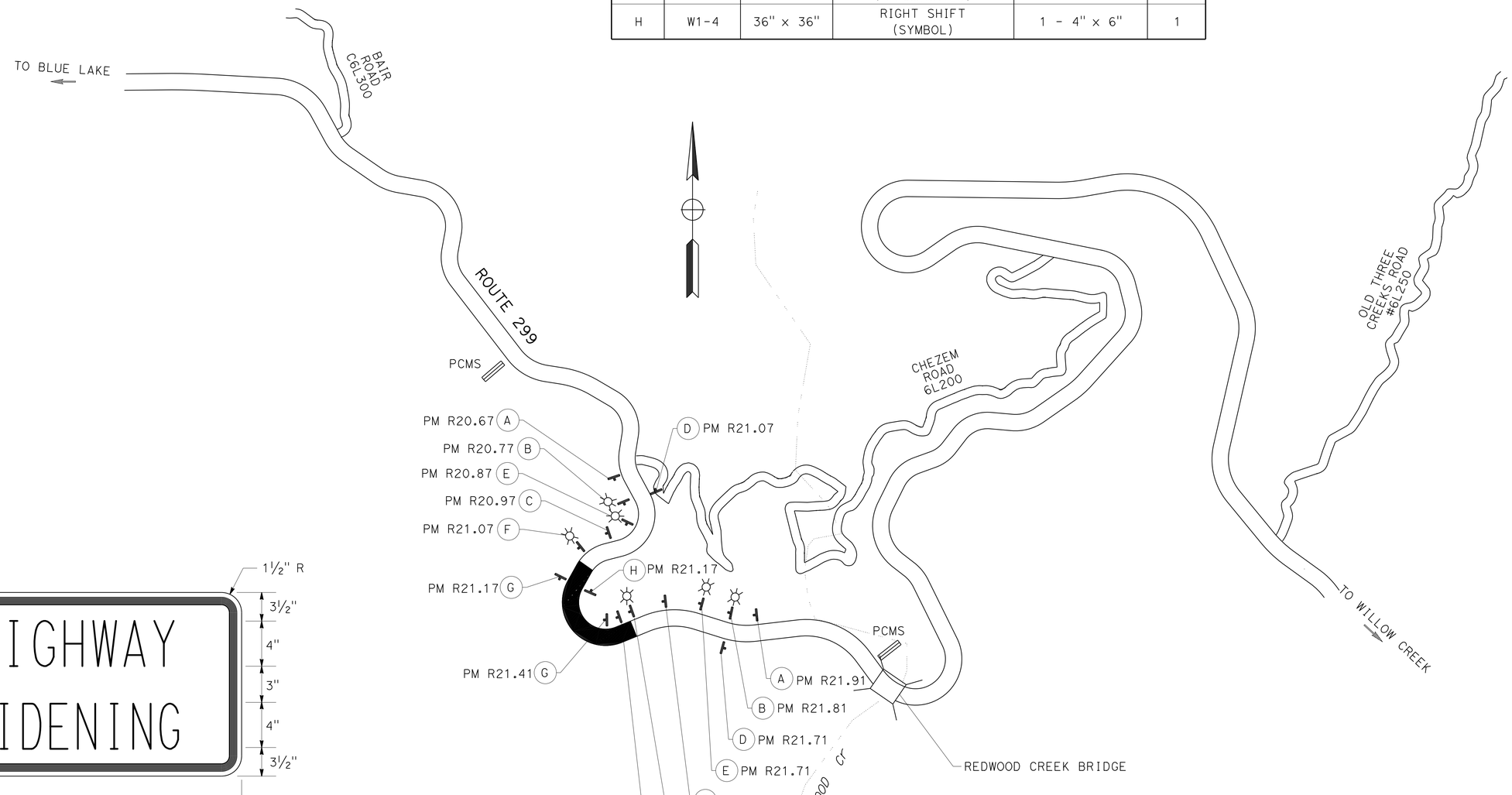

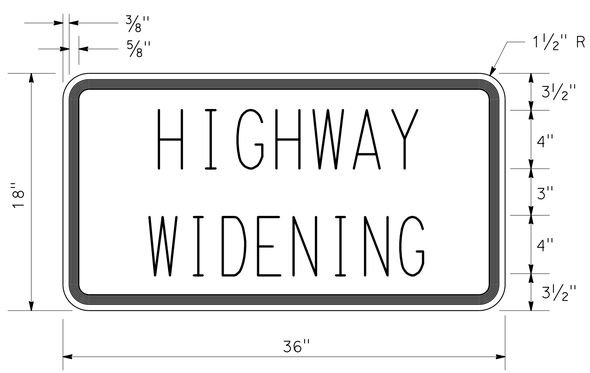

C23B(CA) SIGN PANEL DETAIL
TYPE "C" LETTERING

CONSTRUCTION AREA SIGNS
NO SCALE

CS-1

REVISED BY | DATE REVISED
JOLENA ASTIN | ED SPEER
CALCULATED-DESIGNED BY | CHECKED BY
FUNCTIONAL SUPERVISOR: JOHN L. MARTIN
STATE OF CALIFORNIA - DEPARTMENT OF TRANSPORTATION
Caltrans® DESIGN
P:\proj1\01\0a5201_plans\pse\0100020425ia001.DGN

LAST REVISION | DATE PLOTTED => 30-MAR-2015 | TIME PLOTTED => 08:28
03-03-15

Dist	COUNTY	ROUTE	POST MILES TOTAL PROJECT	SHEET No.	TOTAL SHEETS
01	HUM	299	R21.1/R21.5	22	76

Edward B Speer 03-27-15
REGISTERED CIVIL ENGINEER DATE

03-27-15
PLANS APPROVAL DATE

REGISTERED PROFESSIONAL ENGINEER EDWARD B. SPEER No. C49740 Exp. 09-30-16 CIVIL STATE OF CALIFORNIA

THE STATE OF CALIFORNIA OR ITS OFFICERS OR AGENTS SHALL NOT BE RESPONSIBLE FOR THE ACCURACY OR COMPLETENESS OF SCANNED COPIES OF THIS PLAN SHEET.

STAGE 1 TRAFFIC HANDLING AND CONSTRUCTION

PLACE CONSTRUCTION AREA SIGNS AND ESA FENCING

CONSTRUCT STAGE 1 USING REVERSING ONE-WAY TRAFFIC CONTROL

CONSTRUCT DRAINAGE SYSTEMS 3 AND 4

CONSTRUCT RAIL ELEMENT WALL

PLACE STAGE 1 HMA

LEGEND:

- WORK AREA
- TEMPORARY RAILING (TYPE K)
- TEMPORARY PAVEMENT DELINEATION DETAIL NUMBER
- CHANGE IN TRAFFIC STRIPE
- TEMPORARY CRASH CUSHION
- CHANNELIZER (SURFACE MOUNTED)
- P — OBJECT MARKER (TYPE P)
- CONSTRUCTION AREA SIGN (PORTABLE)
- DIRECTION OF TRAFFIC
- REM STRIPE — REMOVE THERMOPLASTIC TRAFFIC STRIPE

TYPICAL SECTION
"A1" 11+51.14 TO "A1" 23+50.04

** MATCH EXISTING SLOPE

"A1" 13+16 TO "A1" 14+94

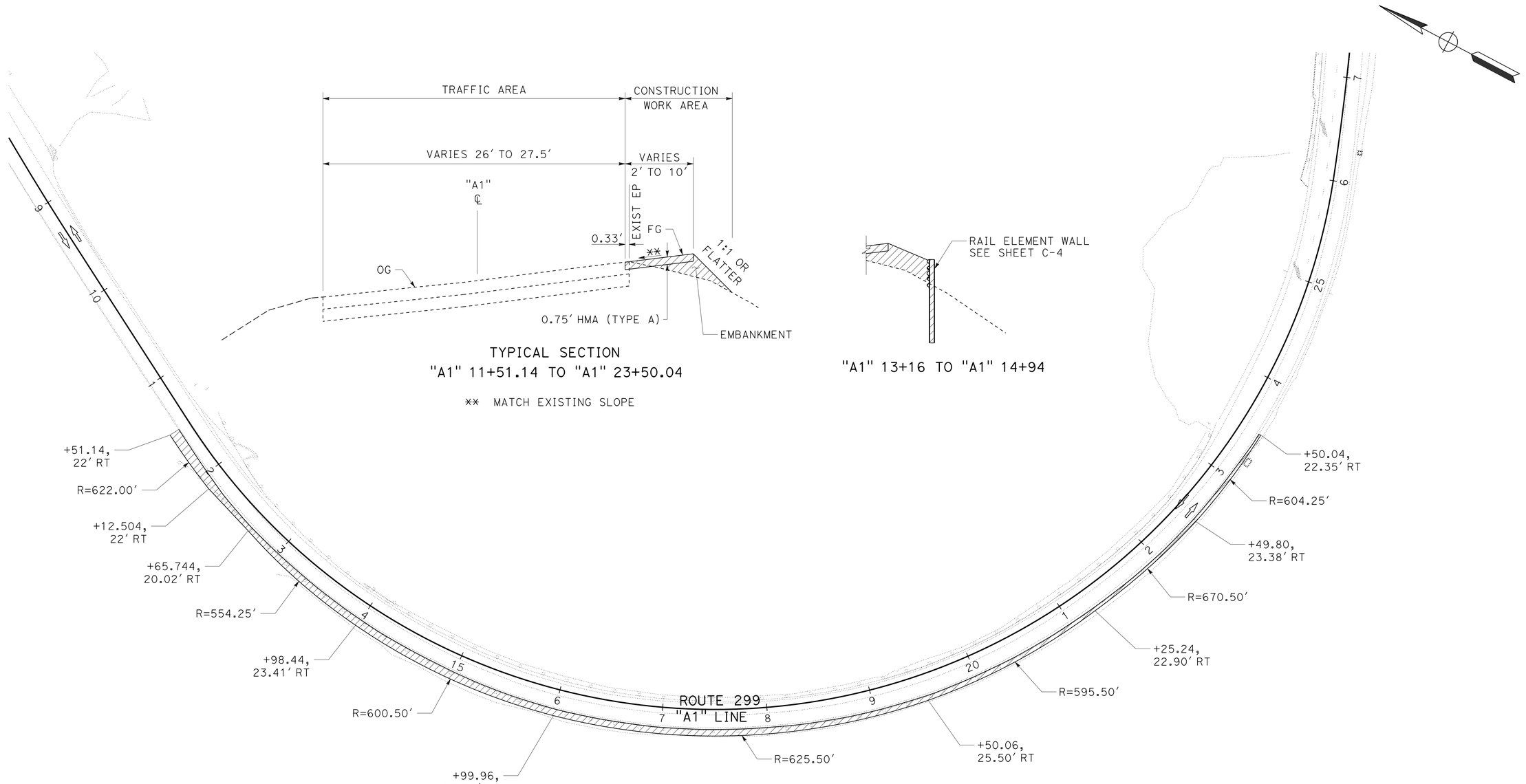

APPROVED FOR STAGE CONSTRUCTION AND TRAFFIC HANDLING WORK ONLY

STAGE 1
STAGE CONSTRUCTION AND TRAFFIC HANDLING PLAN

SCALE: 1" = 50′

SC-1

REVISED BY | DATE REVISED
JOHN L MARTIN | ED SPEER
CALCULATED-DESIGNED BY | CHECKED BY
FUNCTIONAL SUPERVISOR | JOHN L. MARTIN
STATE OF CALIFORNIA - DEPARTMENT OF TRANSPORTATION
Caltrans DESIGN
P:\proj1\01\0a520_plans\pse\0100020425ma001.DGN

LAST REVISION | DATE PLOTTED => 30-MAR-2015 | TIME PLOTTED => 08:28
03-27-15

Dist	COUNTY	ROUTE	POST MILES TOTAL PROJECT	SHEET No.	TOTAL SHEETS
01	HUM	299	R21.1/R21.5	23	76

Edward B Speer 03-27-15
REGISTERED CIVIL ENGINEER DATE

03-27-15
PLANS APPROVAL DATE

REGISTERED PROFESSIONAL ENGINEER
EDWARD B. SPEER
No. C49740
Exp. 09-30-16
CIVIL
STATE OF CALIFORNIA

THE STATE OF CALIFORNIA OR ITS OFFICERS OR AGENTS SHALL NOT BE RESPONSIBLE FOR THE ACCURACY OR COMPLETENESS OF SCANNED COPIES OF THIS PLAN SHEET.

STAGE 2 TRAFFIC HANDLING AND CONSTRUCTION

INSTALL TEMPORARY TRAFFIC SIGNAL SYSTEM, PLACE TEMPORARY TRAFFIC STRIPES, CHANNELIZERS AND TEMPORARY RAILING (TYPE K)

CONSTRUCT GABION FACED MECHANICALLY STABILIZED EMBANKMENT AND DRAINAGE SYSTEMS 1 AND 2

CONSTRUCT LEFT SIDE NEW STRUCTURAL SECTION TO TOP OF HMA (TYPE A) STA 12+50 TO 23+00

PLACE LEFT SIDE HMA DIKE, MIDWEST GUARDRAIL SYSTEM AND CABLE RAILING STA 12+50 TO 23+00

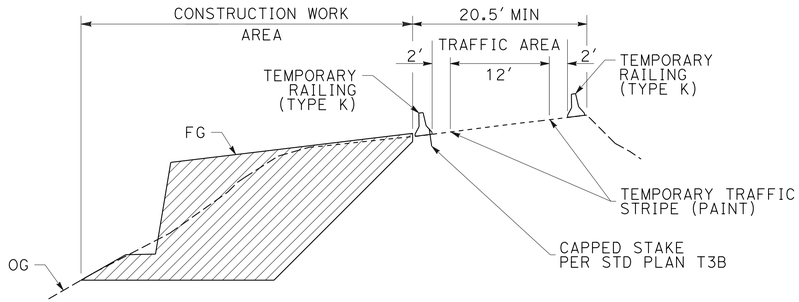

TYPICAL SECTION

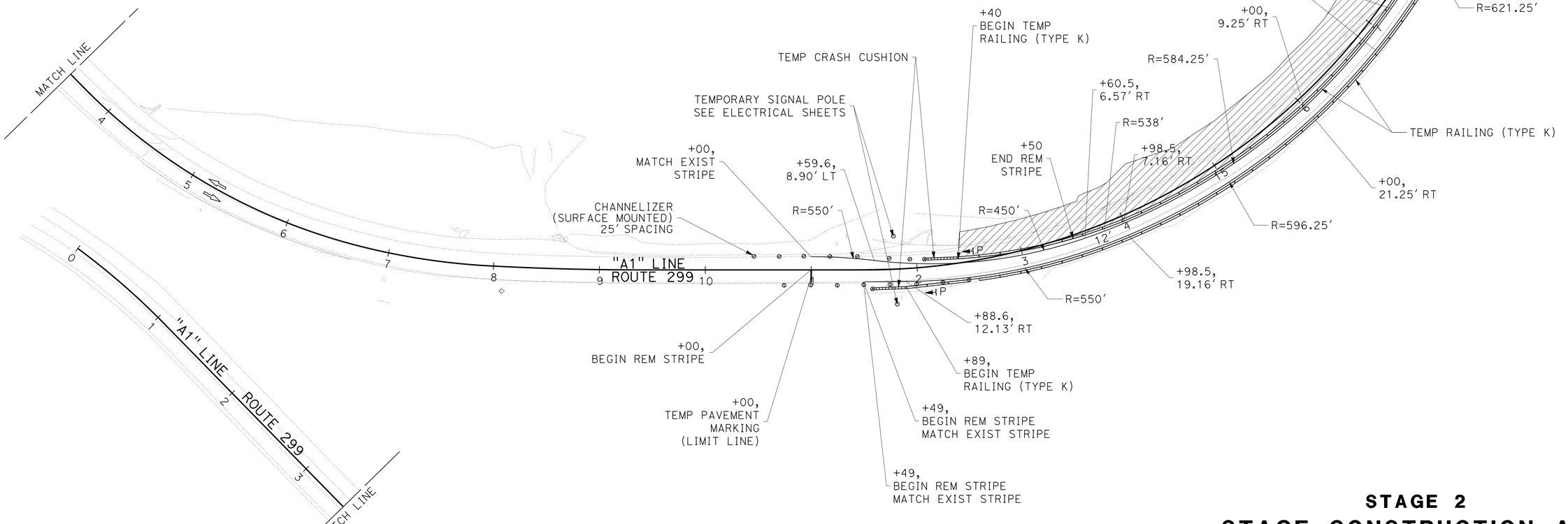

APPROVED FOR STAGE CONSTRUCTION AND TRAFFIC HANDLING WORK ONLY

STAGE 2

STAGE CONSTRUCTION AND TRAFFIC HANDLING PLAN

SCALE: 1" = 50'

SC-2

REVISED BY	DATE REVISED
JOHN L MARTIN	ED SPEER
CALCULATED-DESIGNED BY	CHECKED BY
FUNCTIONAL SUPERVISOR	JOHN L. MARTIN

STATE OF CALIFORNIA - DEPARTMENT OF TRANSPORTATION
Caltrans
DESIGN

P:\proj11\01\0a520_plans\pse\0100020425ma002.dgn

LAST REVISION 03-27-15 | DATE PLOTTED => 30-MAR-2015 | TIME PLOTTED => 08:28

Dist	COUNTY	ROUTE	POST MILES TOTAL PROJECT	SHEET No.	TOTAL SHEETS
01	HUM	299	R21.1/R21.5	24	76

Edward B Speer 03-27-15
REGISTERED CIVIL ENGINEER DATE

03-27-15
PLANS APPROVAL DATE

REGISTERED PROFESSIONAL ENGINEER
EDWARD B. SPEER
No. C49740
Exp. 09-30-16
CIVIL
STATE OF CALIFORNIA

THE STATE OF CALIFORNIA OR ITS OFFICERS OR AGENTS SHALL NOT BE RESPONSIBLE FOR THE ACCURACY OR COMPLETENESS OF SCANNED COPIES OF THIS PLAN SHEET.

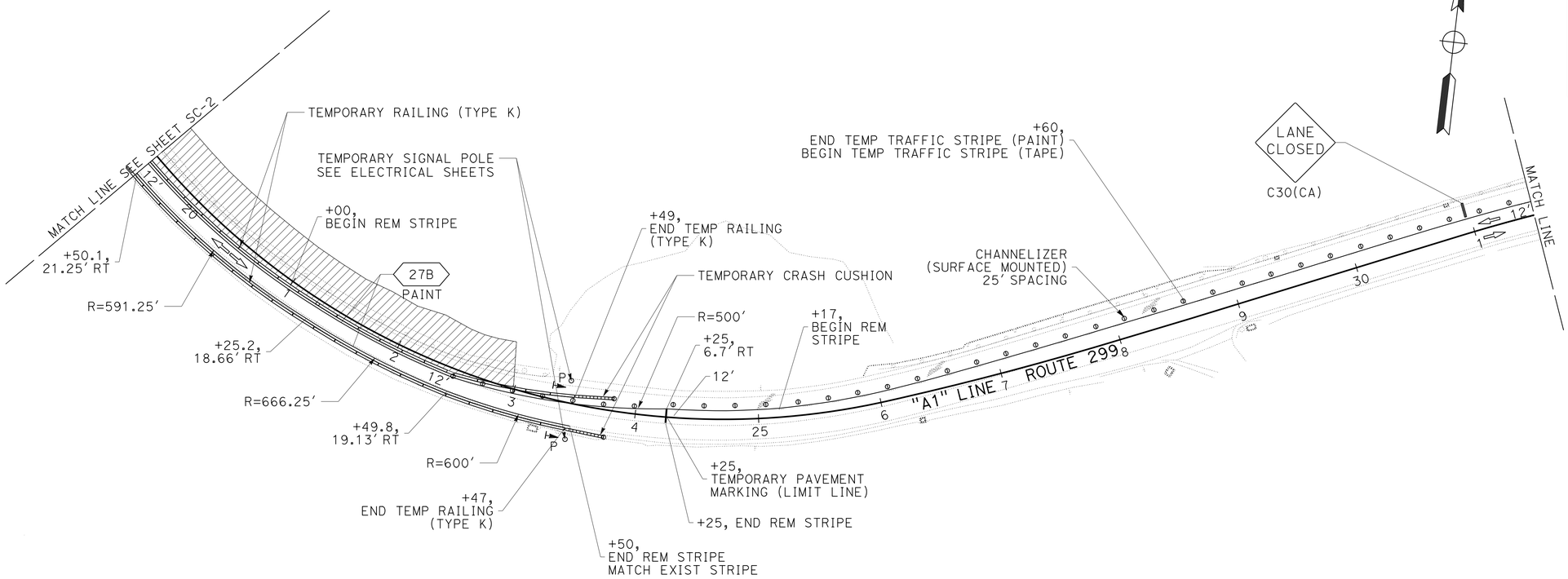

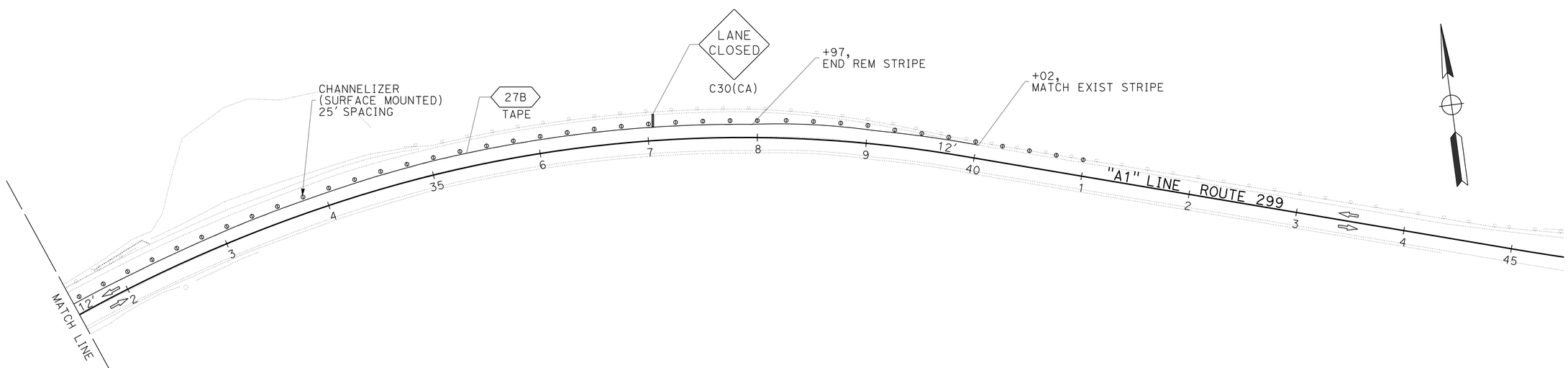

APPROVED FOR STAGE CONSTRUCTION AND TRAFFIC HANDLING WORK ONLY

STAGE 2
STAGE CONSTRUCTION AND TRAFFIC HANDLING PLAN

SCALE: 1" = 50'

SC-3

STATE OF CALIFORNIA - DEPARTMENT OF TRANSPORTATION
Caltrans®
DESIGN

FUNCTIONAL SUPERVISOR: JOHN L. MARTIN
CALCULATED-DESIGNED BY: JOHN L MARTIN
CHECKED BY: ED SPEER
REVISED BY
DATE REVISED

P:\proj\01\0a520_plans\pse\0100020425ma003.dgn

LAST REVISION 03-27-15
DATE PLOTTED => 30-MAR-2015
TIME PLOTTED => 08:28

Dist	COUNTY	ROUTE	POST MILES TOTAL PROJECT	SHEET No.	TOTAL SHEETS
01	HUM	299	R21.1/R21.5	25	76

Edward B Speer 03-27-15
REGISTERED CIVIL ENGINEER DATE

03-27-15
PLANS APPROVAL DATE

REGISTERED PROFESSIONAL ENGINEER
EDWARD B. SPEER
No. C49740
Exp. 09-30-16
CIVIL
STATE OF CALIFORNIA

THE STATE OF CALIFORNIA OR ITS OFFICERS OR AGENTS SHALL NOT BE RESPONSIBLE FOR THE ACCURACY OR COMPLETENESS OF SCANNED COPIES OF THIS PLAN SHEET.

STAGE 3 TRAFFIC HANDLING AND CONSTRUCTION

USE ONE-WAY REVERSING TRAFFIC CONTROL

USE 24-HOUR ONE-WAY REVERSING TRAFFIC CONTROL WHENEVER GUARDRAIL IS MISSING OR OUT OF COMPLIANCE

REMOVE TEMPORARY RAILING (TYPE K) AND TEMPORARY TRAFFIC SIGNAL SYSTEM

CONSTRUCT TEMPORARY SIDE TAPERS BETWEEN NEW AND EXISTING PAVEMENT SURFACES AS NEEDED

REMOVE PORTIONS OF STAGE 1 HMA AS NEEDED

PERFORM COLD PLANING, CONSTRUCT REMAINING NEW STRUCTURAL SECTION TO TOP OF HMA (TYPE A), AND PLACE VARIABLE DEPTH HMA (TYPE A)

PLACE REMAINING HMA DIKE, SHOULDER BACKING AND GUARDRAIL

PLACE OPEN GRADED FINISH COURSE, CENTERLINE AND SHOULDER RUMBLE STRIPS, ROADSIDE SIGNS AND PAVEMENT MARKINGS

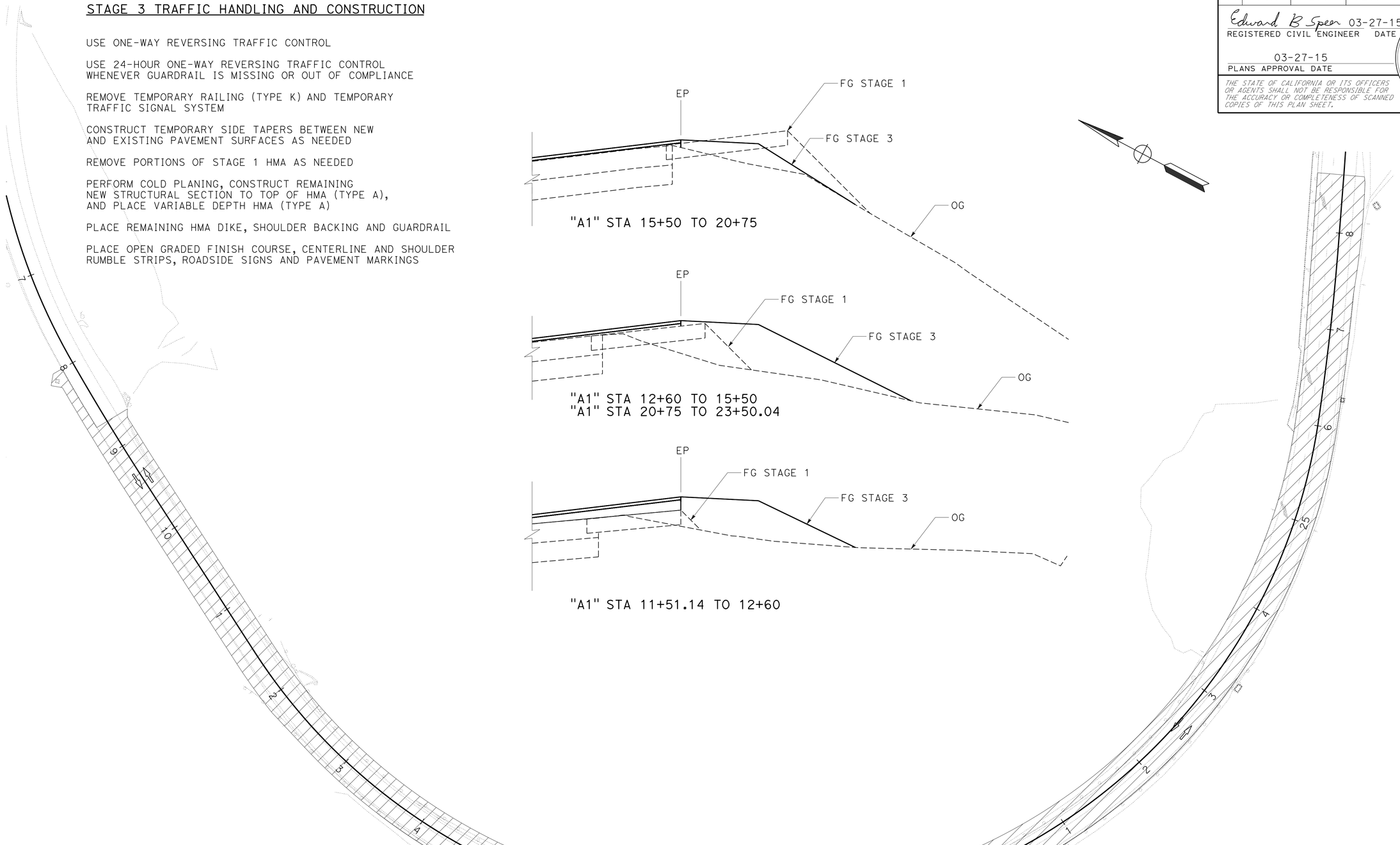

APPROVED FOR STAGE CONSTRUCTION AND TRAFFIC HANDLING WORK ONLY

STAGE 3

STAGE CONSTRUCTION AND TRAFFIC HANDLING PLAN

SCALE: 1" = 50'

SC-4

STATE OF CALIFORNIA - DEPARTMENT OF TRANSPORTATION
Caltrans
DESIGN

FUNCTIONAL SUPERVISOR: JOHN L. MARTIN
CALCULATED-DESIGNED BY: JOHN L MARTIN
CHECKED BY: ED SPEER
REVISED BY
DATE REVISED

P:\proj1\01\0a520_plans\pse\0100020425ma004.DGN

LAST REVISION 03-27-15 | DATE PLOTTED => 30-MAR-2015 | TIME PLOTTED => 08:28

Dist	COUNTY	ROUTE	POST MILES TOTAL PROJECT	SHEET No.	TOTAL SHEETS
01	HUM	299	R21.1/R21.5	26	76

Edward B Speer 03-27-15
REGISTERED CIVIL ENGINEER DATE

03-27-15
PLANS APPROVAL DATE

REGISTERED PROFESSIONAL ENGINEER EDWARD B. SPEER No. C49740 Exp. 09-30-16 CIVIL STATE OF CALIFORNIA

THE STATE OF CALIFORNIA OR ITS OFFICERS OR AGENTS SHALL NOT BE RESPONSIBLE FOR THE ACCURACY OR COMPLETENESS OF SCANNED COPIES OF THIS PLAN SHEET.

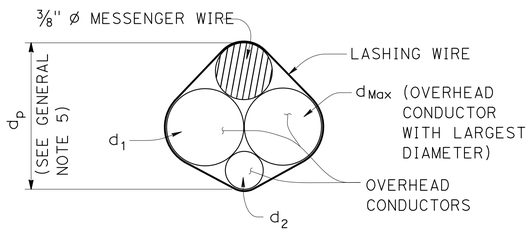

$d_p = 3/8'' + d_{Max} + 0.30 * (d_1 + d_2 + \ldots d_n)$

PROJECTED DEPTH OF OVERHEAD BUNDLE, (dp)

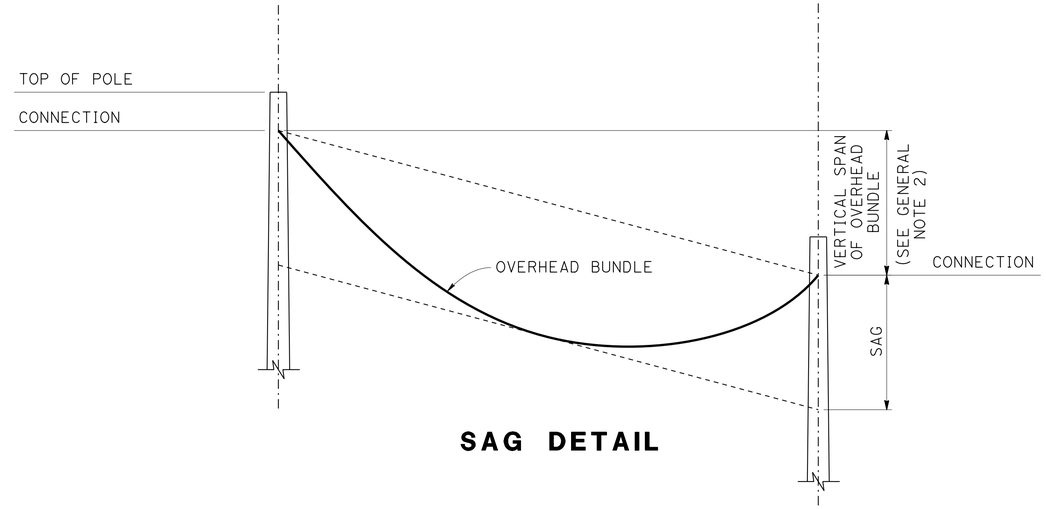

SAG DETAIL

DESIGN: AASHTO STANDARD SPECIFICATIONS FOR STRUCTURAL SUPPORTS FOR HIGHWAY SIGNS, LUMINAIRES AND TRAFFIC SIGNALS, FIFTH EDITION (LTS-5).

GROUP LOAD COMBINATIONS:

I DEAD LOAD
II DEAD LOAD + WIND LOAD
III DEAD LOAD + 0.5 (WIND LOAD) + ICE LOAD
IV FATIGUE: NOT USED

LOADING:

WIND LOADING: 100 MPH (3-SECOND GUST)
WIND RECURRENCE INTERVAL: 10 YEARS
COMBINED HEIGHT, EXPOSURE, AND ELEVATED TERRAIN FACTOR = 1.05 (EXPOSURE C, STRUCTURE IS NOT LOCATED ON OR OVER THE TOP HALF OF A RIDGE, HILL, OR ESCARPMENT)

ICE LOADING: 3.0 PSF ON SURFACES, 0.60 IN RADIAL THICKNESS OF ICE AT A UNIT WEIGHT OF 60 PCF ON OVERHEAD BUNDLES

BASIC DESIGN VALUES:

TIMBER POLES: FB = 1850 PSI
FV = 110 PSI
FCP = 230 PSI
FC = 950 PSI
E = 1500 X 10^3 PSI

DESIGN WIRE BREAKING STRENGTHS:

ASTM A475, UTILITIES GRADE, 7 STRAND MODIFIED BY TERMINATION EFFICIENCY FACTOR OF 0.8

FOUNDATION DESIGN NOTES:

1. POLE EMBEDMENT DEPTH DESIGN IS BASED ON BROMS' APPROXIMATE PROCEDURE AS DESCRIBED IN ARTICLE 13.6 OF AASHTO LTS-5.

2. EMBEDMENT DEPTH IS CALCULATED BASED ON FOLLOWING SOIL PARAMETERS,
COHESIVE SOIL:
SHEAR STRENGTH OF SOIL C = 1500 PSF.
COHESIONLESS SOIL:
ø = 30 DEG, γ = 120 PCF.
SOIL ASSUMED TO BE UNSATURATED.

3. AN OVERLOAD FACTOR OF 2.0 AND AN UNDERCAPACITY FACTOR OF 0.7 WERE USED FOR SAFETY FACTOR OF 2.86.

4. ALLOWABLE VERTICAL BEARING PRESSURE AT THE END BEARING OF POLES IS 3000 PSF AT 6 FEET OR MORE EMBEDMENT.

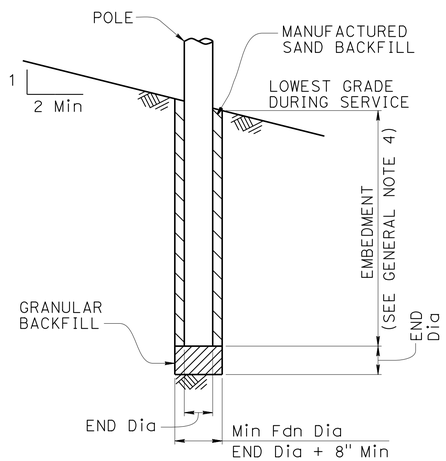

POLE FOUNDATION

GENERAL NOTES:

1. THE MESSENGER WIRE AND ANY COMBINATION OF OVERHEAD CONDUCTORS MUST NOT EXCEED EITHER A SELF WEIGHT OF 3.0 LB/FT OR THE MAXIMUN D_p.

2. THE MAXIMUM VERTICAL SPAN IS 10% OF THE HORIZONTAL SPAN.

3. FOR POLES WITH ADJACENT UNBALANCED HORIZONTAL SPANS, THE SHORTEST HORIZONTAL SPAN MUST BE AT LEAST 50% OF THE LARGEST HORIZONTAL SPAN.

4. ADD 2'-0" FOR SLOPES ABOVE 1V:4H.

5. FOR A POLE SUPPORTING MULTIPLE SPANS, CALCULATE dp FOR EACH SPAN AND USE THE LARGEST VALUE.

6. DO NOT EXCEED THE ATTACHMENTS SHOWN.

DIAMETERS AND SELF WEIGHT OF OVERHEAD CONDUCTORS

CONDUCTOR OR CABLE TYPE	DIAMETER d (in)	WEIGHT w (plf)
3 CONDUCTOR SIGNAL CABLE (3CSC)	0.400	0.0980
5 CONDUCTOR SIGNAL CABLE (5CSC)	0.500	0.1560
9 CONDUCTOR SIGNAL CABLE (9CSC)	0.650	0.2760
12 CONDUCTOR SIGNAL CABLE (12CSC)	0.800	0.3970
28 CONDUCTOR SIGNAL CABLE (28CSC)	0.900	0.6490
1-#14	0.166	0.0235
1-#12	0.185	0.0330
1-#10	0.210	0.0476
1-#8	0.271	0.0774
1-#6	0.310	0.1130
1-#4	0.359	0.1690
1-#3	0.388	0.2080
1-#2	0.420	0.2560
1-#1	0.498	0.3340
6-CONDUCTOR SIGNAL INTERCONNECT CABLE (SIC)	0.350	0.0860
12-CONDUCTOR SIGNAL INTERCONNECT CABLE (SIC)	0.500	0.1440
DETECTOR LEAD-IN CABLE (DLC)	0.310	0.0440
12 to 48-STRAND FIBER OPTIC CABLE (48FOC)	0.424	0.0600
72-STRAND FIBER OPTIC CABLE (72FOC)	0.484	0.0770
96-STRAND FIBER OPTIC CABLE (96FOC)	0.535	0.1050
144-STRAND FIBER OPTIC CABLE (144FOC)	0.670	0.1890
3/8" ø MESSENGER WIRE	0.375	0.2730

STAGE CONSTRUCTION AND TRAFFIC HANDLING DETAILS

NO SCALE

SCD-1

REVISED BY | DATE REVISED
ED SPEER | JOHN L. MARTIN
CALCULATED-DESIGNED BY | CHECKED BY
FUNCTIONAL SUPERVISOR | JOHN L. MARTIN
STATE OF CALIFORNIA - DEPARTMENT OF TRANSPORTATION
Caltrans® DESIGN

P:\proj\01\0a520_plans\pse\0100020425mb001.DGN

LAST REVISION 03-27-15 | DATE PLOTTED => 30-MAR-2015 | TIME PLOTTED => 08:28

Dist	COUNTY	ROUTE	POST MILES TOTAL PROJECT	SHEET No.	TOTAL SHEETS
01	HUM	299	R21.1/R21.5	27	76

Edward B Speer 03-27-15
REGISTERED CIVIL ENGINEER DATE

03-27-15
PLANS APPROVAL DATE

REGISTERED PROFESSIONAL ENGINEER
EDWARD B. SPEER
No. C49740
Exp. 09-30-16
CIVIL
STATE OF CALIFORNIA

THE STATE OF CALIFORNIA OR ITS OFFICERS OR AGENTS SHALL NOT BE RESPONSIBLE FOR THE ACCURACY OR COMPLETENESS OF SCANNED COPIES OF THIS PLAN SHEET.

NOTES:

1. MAXIMUM OF 2 SIGNAL FACES PER SPAN WITHIN THE HATCHED REGIONS INDICATED BY "LOCATION OF SIGNAL FACES".
2. FOR ADDITIONAL INFORMATION REGARDING SIGNAL EQUIPMENT SEE ELECTRICAL LAYOUT SHEETS.

KEY NOTES:

1. OVERHEAD BUNDLE CONSISTING OF A 3/8" ø MESSENGER WIRE AND OVERHEAD CONDUCTORS AND LASHING WIRE
2. LUMINAIRE WITH MAST ARM
3. SIGNAL FACE WITH 3 INDICATIONS
4. RISER WITH WEATHER HEAD AS REQUIRED
5. PULL BOX AS REQUIRED
6. GROUNDING AS REQUIRED
7. 3/8" ø TETHER WIRE
8. SINGLE SECTION FLASHING BEACON

LEGEND:

A — WOOD POLE WITH ATTACHMENTS

—··TS—··— OVERHEAD BUNDLE WITH SIGNAL FACES (SEE NOTE 1)

POLE SELECTION TABLE

A —··TS—··—

			CASE 1NT		
OVERHEAD BUNDLE HORIZONTAL SPAN (Max)	75'	MAXIMUM dp	1"	1.5"	2.0"
		MINIMUM POLE CLASS	H-5	H-6	H-6
		POLE EMBEDMENT (E)	13'		

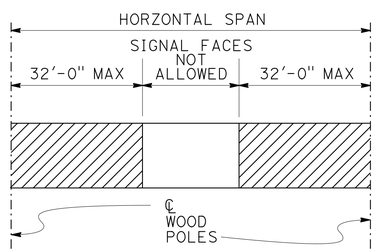

LOCATION OF SIGNAL FACES

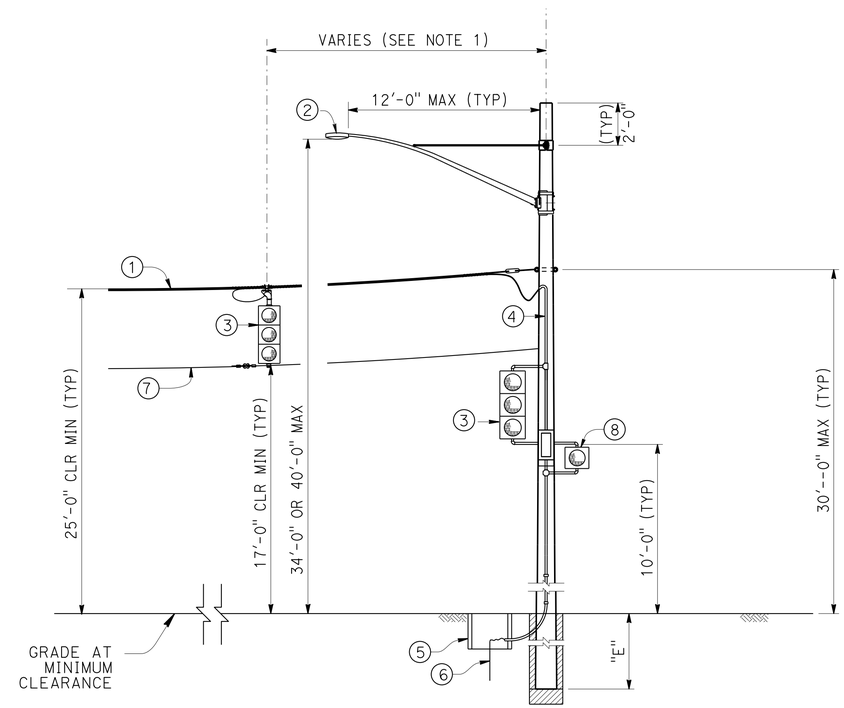

CASE 1NT

POLE AT DEAD END WITH ATTACHMENTS (TYP)

STAGE CONSTRUCTION AND TRAFFIC HANDLING DETAILS

NO SCALE

SCD-2

LAST REVISION	DATE PLOTTED => 30-MAR-2015
03-27-15	TIME PLOTTED => 08:28

REVISED BY	DATE REVISED
ED SPEER	JOHN L. MARTIN
CALCULATED-DESIGNED BY	CHECKED BY
FUNCTIONAL SUPERVISOR	JOHN L. MARTIN

STATE OF CALIFORNIA - DEPARTMENT OF TRANSPORTATION
Caltrans
DESIGN

P:\proj1\01\0a520_plans\pse\0100020425mb002.DGN

Dist	COUNTY	ROUTE	POST MILES TOTAL PROJECT	SHEET No.	TOTAL SHEETS
01	HUM	299	R21.1/R21.5	28	76

Edward B Speer 03-27-15
REGISTERED CIVIL ENGINEER DATE

03-27-15
PLANS APPROVAL DATE

REGISTERED PROFESSIONAL ENGINEER
EDWARD B. SPEER
No. C49740
Exp. 09-30-16
CIVIL
STATE OF CALIFORNIA

THE STATE OF CALIFORNIA OR ITS OFFICERS OR AGENTS SHALL NOT BE RESPONSIBLE FOR THE ACCURACY OR COMPLETENESS OF SCANNED COPIES OF THIS PLAN SHEET.

NOTES:

1. FOR GUY WIRES USE 3 CLAMPS.
2. USE 5/8" Dia EXCEPT 3/4" Dia AT GUYED WIRES

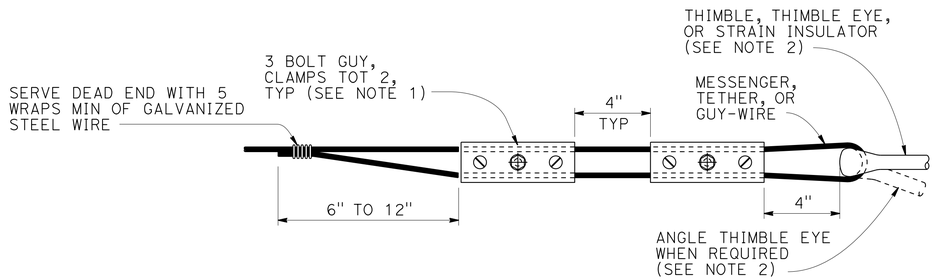

ALTERNATIVE TERMINATION OF MESSENGER WIRES USING GUY CLAMPS

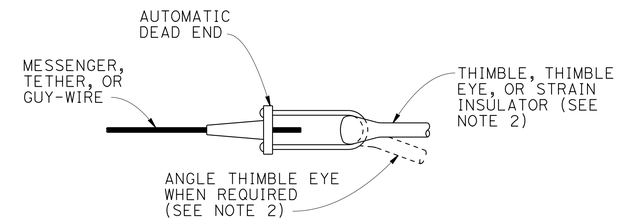

TERMINATION OF WIRES USING AUTOMATIC DEAD END

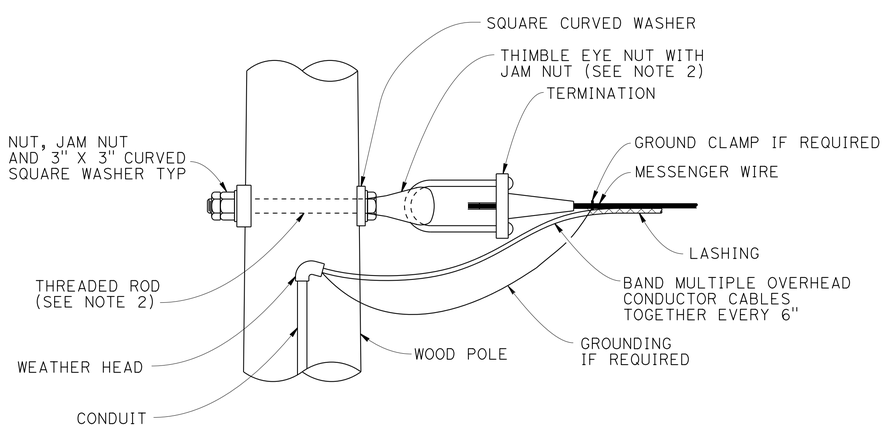

POLE AT DEAD END CONNECTION

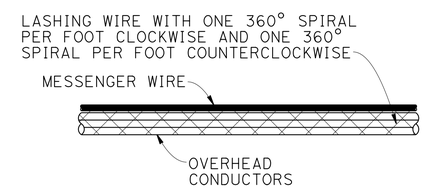

DOUBLE LASHING DETAIL

USE IF d_p IS GREATER THAN 1 1/2"

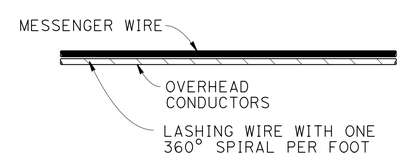

TYPICAL LASHING DETAIL

USE IF d_p IS 1 1/2" OR LESS

STAGE CONSTRUCTION AND TRAFFIC HANDLING DETAILS

NO SCALE

SCD-3

REVISED BY | DATE REVISED
ED SPEER | JOHN L. MARTIN
CALCULATED-DESIGNED BY | CHECKED BY
FUNCTIONAL SUPERVISOR
JOHN L. MARTIN

STATE OF CALIFORNIA - DEPARTMENT OF TRANSPORTATION
Caltrans® DESIGN

P:\proj1\01\0a520_plans\pse\0100020425mb003.DGN

LAST REVISION 03-27-15 | DATE PLOTTED => 30-MAR-2015 | TIME PLOTTED => 08:28

Dist	COUNTY	ROUTE	POST MILES TOTAL PROJECT	SHEET No.	TOTAL SHEETS
01	HUM	299	R21.1/R21.5	29	76

Edward B Speer 03-27-15
REGISTERED CIVIL ENGINEER DATE

03-27-15
PLANS APPROVAL DATE

REGISTERED PROFESSIONAL ENGINEER EDWARD B. SPEER No. C49740 Exp. 09-30-16 CIVIL STATE OF CALIFORNIA

THE STATE OF CALIFORNIA OR ITS OFFICERS OR AGENTS SHALL NOT BE RESPONSIBLE FOR THE ACCURACY OR COMPLETENESS OF SCANNED COPIES OF THIS PLAN SHEET.

NOTES:

1. LUMINAIRE MAST ARMS MUST BE IN COMPLIANCE WITH STANDARD PLAN ES-6D WITH NOTED MODIFICATIONS.
2. VERIFY POLE DIMENSIONS AT TIE-ROD ATTACHMENT HEIGHT. FABRICATE 8" FLAT BAR WITH "L" DIMENSION TO MAINTAIN AN OPEN GAP BETWEEN FLANGES IN FINISHED INSTALLATION.
3. NOT ALL SCREW HEADS AND BOLT HEADS ARE SHOWN FOR CLARITY.
4. MAST ARM NOT SHOWN FOR CLARITY.

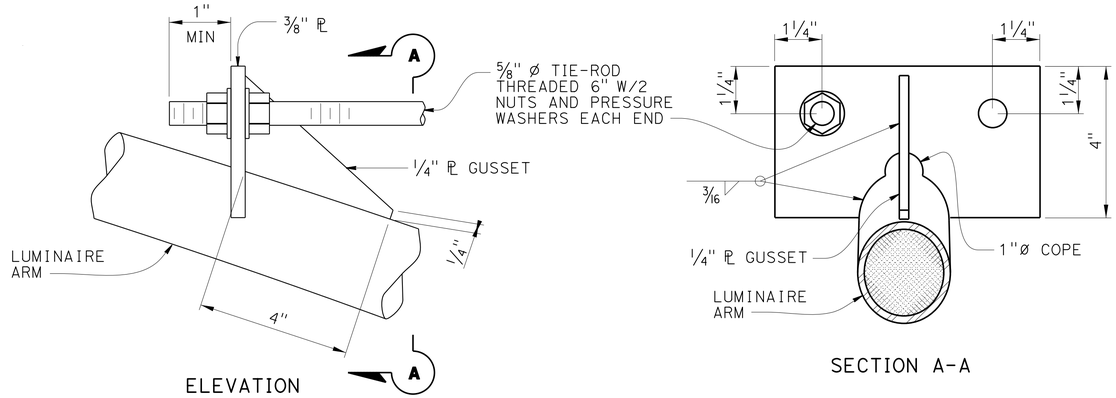

ELEVATION

SECTION A-A

DETAIL A
TIE-ROD AT LUMINAIRE ARM

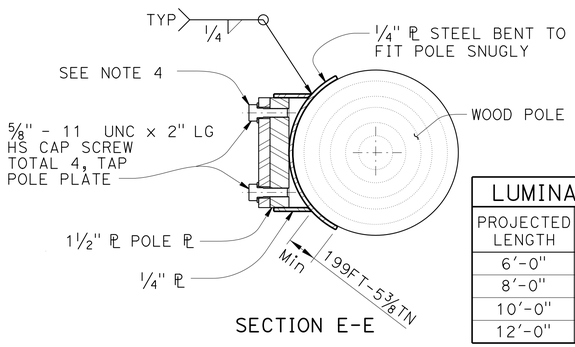

SECTION E-E

LUMINAIRE MAST ARM DATA			
PROJECTED LENGTH	N RISE	Min OD AT POLE	NOMINAL THICKNESS
6'-0"	2'-0"±	3 1/4"	0.1196"
8'-0"	2'-6"±	3 1/2"	
10'-0"	3'-3"±	3 7/8"	
12'-0"	4'-3"±		

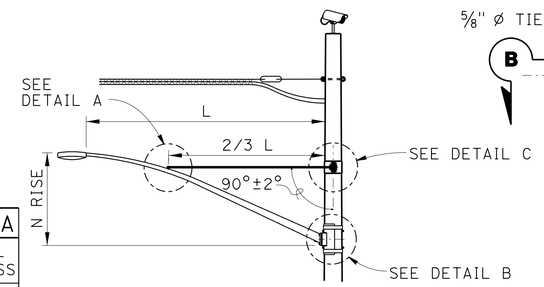

LUMINAIRE MAST ARM

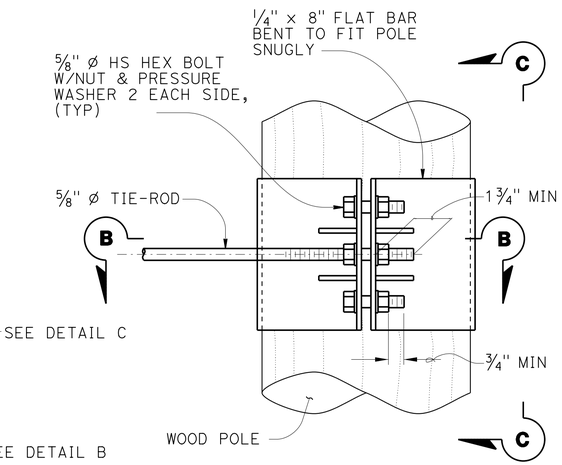

ELEVATION

NOTE:
NOT ALL SCREW AND BOLT HEADS SHOWN FOR CLARITY.

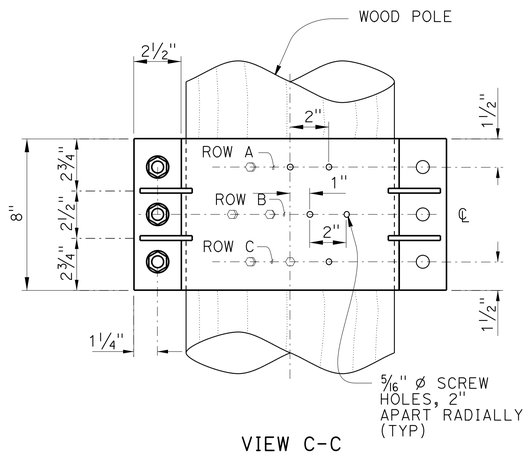

VIEW C-C

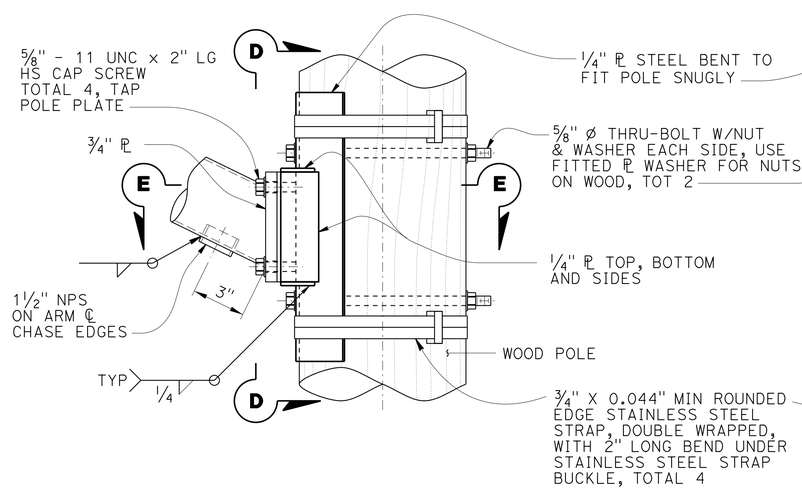

ELEVATION

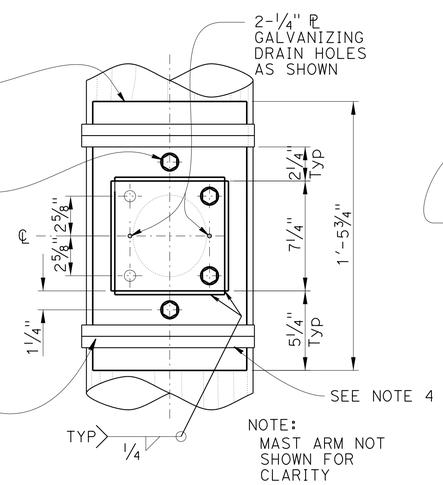

VIEW D-D

DETAIL B
ARM CONNECTION DETAILS

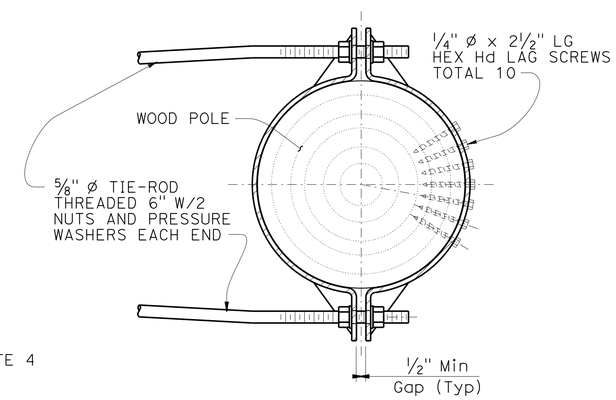

SECTION B-B

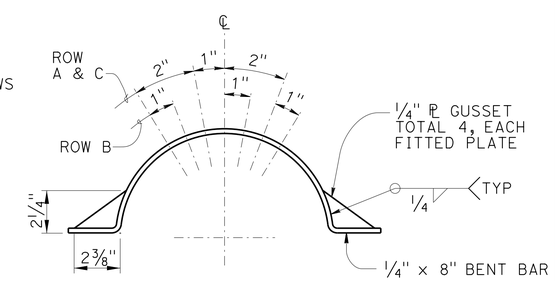

LAG SCREW AND GUSSET PLATE LAYOUT

DETAIL C
TIE-ROD AT POLE

STAGE CONSTRUCTION AND TRAFFIC HANDLING DETAILS

NO SCALE

SCD-4

STATE OF CALIFORNIA - DEPARTMENT OF TRANSPORTATION
Caltrans® DESIGN

FUNCTIONAL SUPERVISOR: JOHN L. MARTIN
CALCULATED-DESIGNED BY: ED SPEER
CHECKED BY: JOHN L. MARTIN
REVISED BY
DATE REVISED

P:\proj1\01\0a520_plans\pse\0100020425mb004.DGN

LAST REVISION 03-27-15
DATE PLOTTED => 30-MAR-2015
TIME PLOTTED => 08:28

Dist	COUNTY	ROUTE	POST MILES TOTAL PROJECT	SHEET No.	TOTAL SHEETS
01	HUM	299	R21.1/R21.5	30	76

Edward B Speer 03-27-15
REGISTERED CIVIL ENGINEER DATE

03-27-15
PLANS APPROVAL DATE

REGISTERED PROFESSIONAL ENGINEER
EDWARD B. SPEER
No. C49740
Exp. 09-30-16
CIVIL
STATE OF CALIFORNIA

THE STATE OF CALIFORNIA OR ITS OFFICERS OR AGENTS SHALL NOT BE RESPONSIBLE FOR THE ACCURACY OR COMPLETENESS OF SCANNED COPIES OF THIS PLAN SHEET.

NOTES:

1. VERIFY POLE DIMENSIONS AT TERMINAL COMPARTMENT FOR FABRICATION OF BACKING PLATE AND CURVED WASHER.
2. BACKING PLATE TO BE GALVANIZED AFTER FABRICATION.
3. ¾" X 0.044" MINIMUM, ROUNDED EDGE STAINLESS STEEL STRAPS, DOUBLE WRAPPED WITH 2" LONG BEND UNDER STAINLESS STEEL STRAP BUCKLE.
4. FOR DETAILS NOT SHOWN SEE STANDARD PLAN ES-4D.

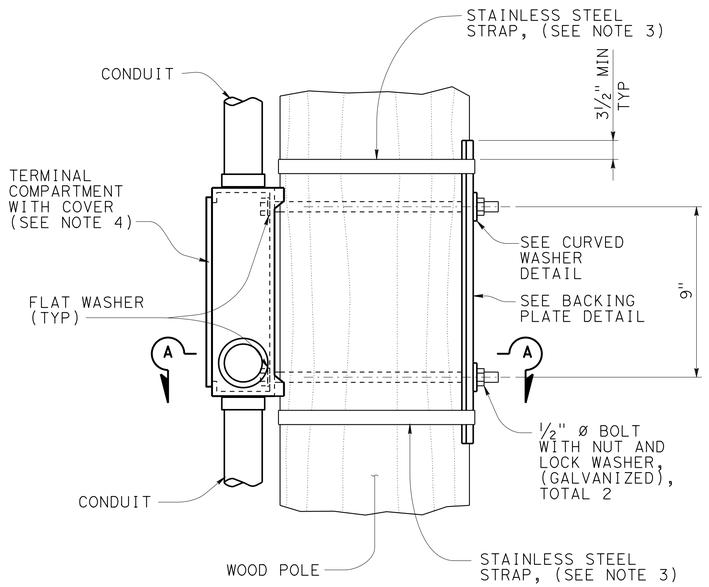

ELEVATION

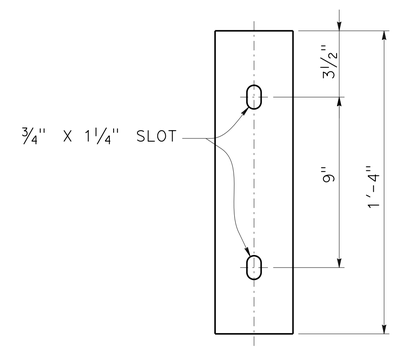

ELEVATION

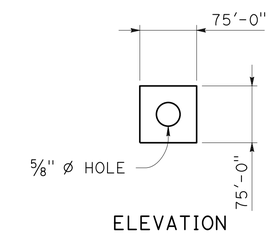

ELEVATION

PLAN

BACKING PLATE DETAIL

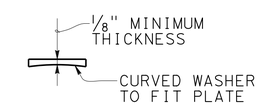

PLAN

CURVED WASHER DETAIL

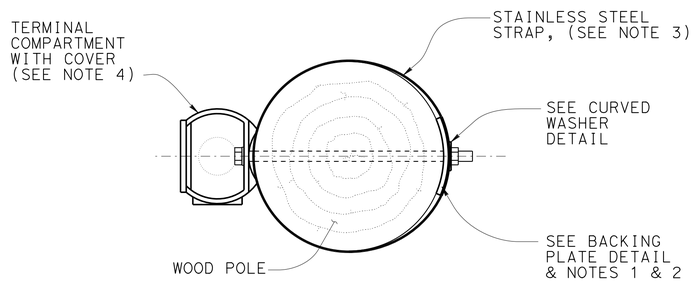

SECTION A-A

SIDE MOUNTING TERMINAL COMPARTMENT

STAGE CONSTRUCTION AND TRAFFIC HANDLING DETAILS

NO SCALE

SCD-5

REVISED BY | DATE REVISED
ED SPEER | JOHN L. MARTIN
CALCULATED-DESIGNED BY | CHECKED BY
FUNCTIONAL SUPERVISOR: JOHN L. MARTIN

STATE OF CALIFORNIA - DEPARTMENT OF TRANSPORTATION
Caltrans®
DESIGN

P:\proj1\01\0a520_plans\pse\0100020425mb005.DGN

LAST REVISION 03-27-15 | DATE PLOTTED => 30-MAR-2015 | TIME PLOTTED => 08:28

BORDER LAST REVISED 7/2/2010 | USERNAME => s115152 | DGN FILE => 0100020425mb005.DGN | RELATIVE BORDER SCALE IS IN INCHES 0 1 2 3 | UNIT 0315 | PROJECT NUMBER & PHASE 0100020425-1 | EA 01-0A5201

Dist	COUNTY	ROUTE	POST MILES TOTAL PROJECT	SHEET No.	TOTAL SHEETS
01	HUM	299	R21.1/R21.5	31	76

Edward B Speer 03-27-15
REGISTERED CIVIL ENGINEER DATE

03-27-15
PLANS APPROVAL DATE

REGISTERED PROFESSIONAL ENGINEER
EDWARD B. SPEER
No. C49740
Exp. 09-30-16
CIVIL
STATE OF CALIFORNIA

THE STATE OF CALIFORNIA OR ITS OFFICERS OR AGENTS SHALL NOT BE RESPONSIBLE FOR THE ACCURACY OR COMPLETENESS OF SCANNED COPIES OF THIS PLAN SHEET.

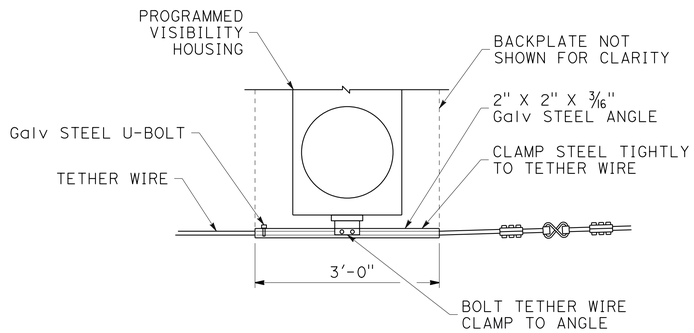

TETHER WIRE ATTACHMENT FOR PROGRAMMED VISIBILITY SIGNAL FACE

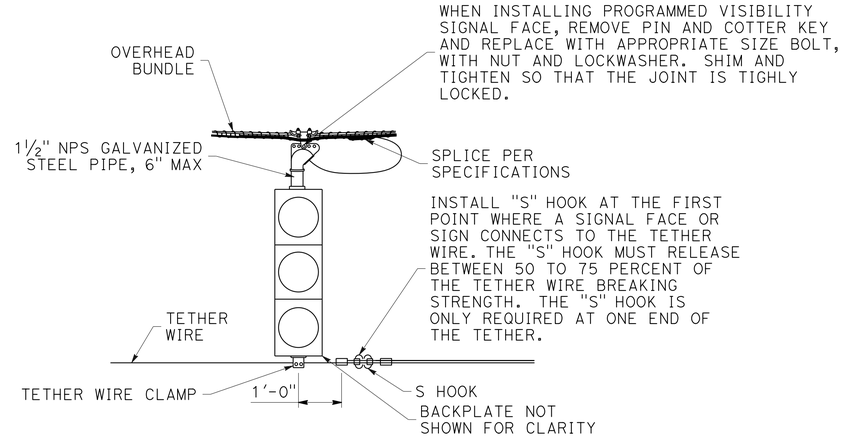

SIGNAL FACE SUPPORT

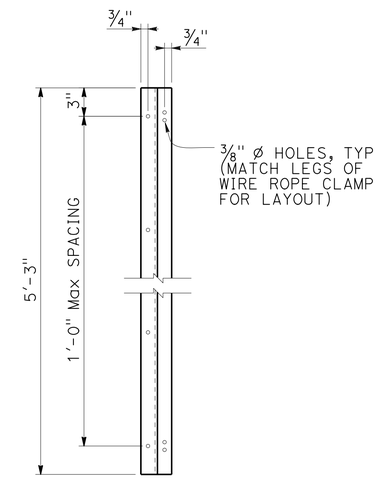

Z-BAR ELEVATION

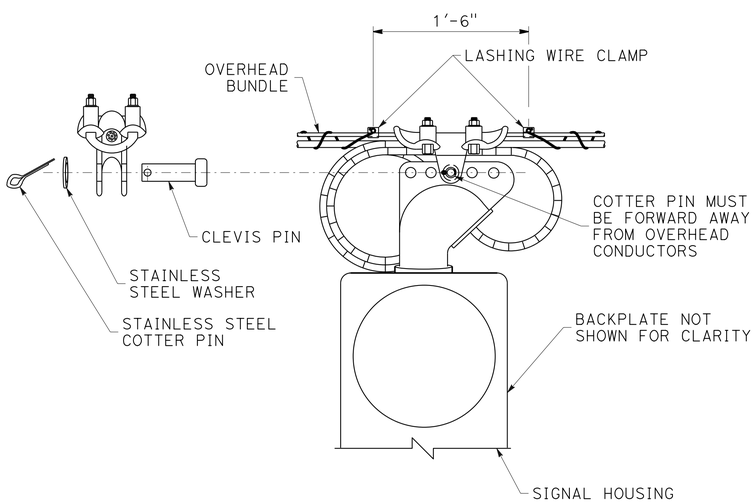

MESSENGER WIRE CLAMP COTTER PIN DETAIL

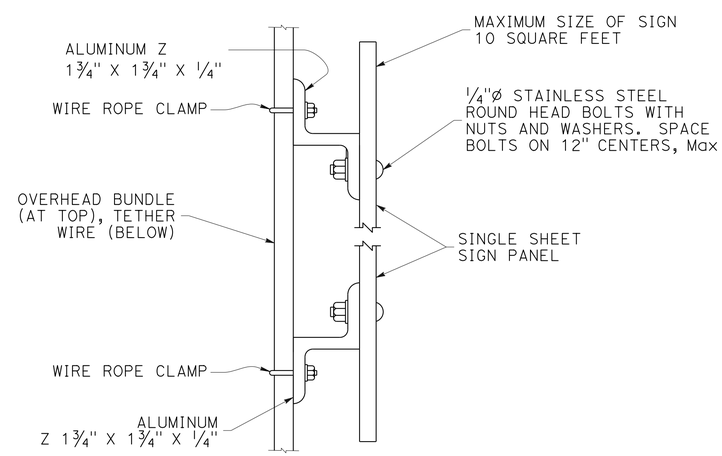

THE OVERLAPPED CONNECTION OF ADJUSTABLE HANGERS MUST USE A MINIMUM OF 2 BOLTS WITH A MINIMUM SPACING BETWEEN BOLTS OF 2"

SIGN MOUNTING DETAIL

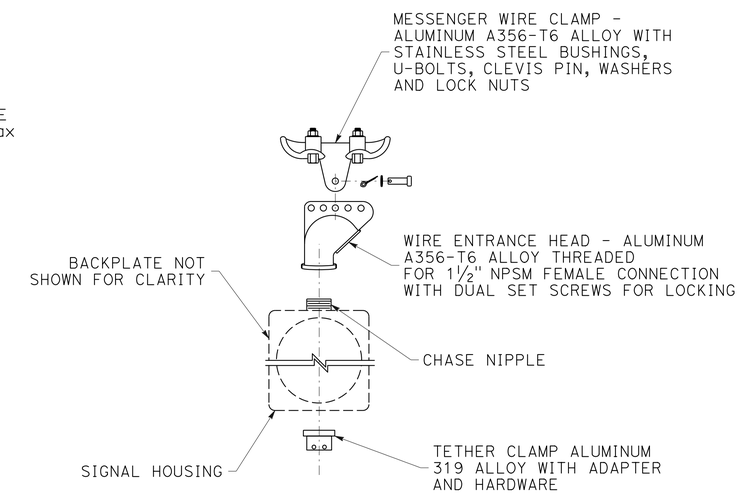

SIGNAL FACE SUPPORT EXPLODED VIEW

STAGE CONSTRUCTION AND TRAFFIC HANDLING DETAILS

NO SCALE

SCD-6

REVISED BY | DATE REVISED
ED SPEER | JOHN L. MARTIN
CALCULATED-DESIGNED BY | CHECKED BY
FUNCTIONAL SUPERVISOR
JOHN L. MARTIN

STATE OF CALIFORNIA - DEPARTMENT OF TRANSPORTATION
Caltrans® DESIGN

P:\proj1\01\0a520_plans\pse\0100020425mb006.DGN

LAST REVISION 03-27-15 | DATE PLOTTED => 30-MAR-2015 | TIME PLOTTED => 08:28

Dist	COUNTY	ROUTE	POST MILES TOTAL PROJECT	SHEET No.	TOTAL SHEETS
01	HUM	299	R21.1/R21.5	32	76

Edward B Speer 03-27-15
REGISTERED CIVIL ENGINEER DATE

03-27-15
PLANS APPROVAL DATE

REGISTERED PROFESSIONAL ENGINEER
EDWARD B. SPEER
No. C49740
Exp. 09-30-16
CIVIL
STATE OF CALIFORNIA

THE STATE OF CALIFORNIA OR ITS OFFICERS OR AGENTS SHALL NOT BE RESPONSIBLE FOR THE ACCURACY OR COMPLETENESS OF SCANNED COPIES OF THIS PLAN SHEET.

NOTE:

1. (N) - NOT A SEPARATE PAY ITEM, FOR INFORMATION ONLY

CONSTRUCTION AREA SIGNS (PORTABLE)

CODE	PANEL SIZE	SIGN MESSAGE	(N) EA
C30 (CA)	30" x 30"	LANE CLOSED	2
TYPE P (CA)	12" x 36"	OBJECT MARKER - LEFT	2
TYPE P (CA)	12" x 36"	OBJECT MARKER - RIGHT	2
		TOTAL	6*

* ADDITIONAL QUANTITIES SHOWN ELSEWHERE, SEE SHEET CS-1

TRAFFIC HANDLING QUANTITIES

LOCATION	TEMPORARY PAVEMENT MARKING (PAINT)	TEMPORARY TRAFFIC STRIPE (TAPE) DETAIL 27B	TEMPORARY TRAFFIC STRIPE (PAINT) DETAIL 27B	CHANNELIZER (SURFACE MOUNTED)	TEMPORARY RAILING (TYPE K)	(N) TEMPORARY MARKER (TYPE P)	(N) OBJECT MARKER (TYPE P)	TEMPORARY CRASH CUSHION	REMOVE THERMOPLASTIC TRAFFIC STRIPE DETAIL 12	REMOVE THERMOPLASTIC TRAFFIC STRIPE DETAIL 22	REMOVE THERMOPLASTIC TRAFFIC STRIPE DETAIL 27B
	SQFT	LF	LF	EA	LF	EA	EA	EA	LF	LF	LF
STAGE 2	24	1153	3012	91	2320	4	4	4	320	1158	1234
TOTAL	24	1153	3012	91	2320	4	4	4	2712		

STAGE CONSTRUCTION AND TRAFFIC HANDLING QUANTITIES
SCQ-1

REVISED BY | DATE REVISED
JOHN L. MARTIN | ED SPEER
CALCULATED-DESIGNED BY | CHECKED BY
FUNCTIONAL SUPERVISOR
JOHN L. MARTIN

STATE OF CALIFORNIA - DEPARTMENT OF TRANSPORTATION
Caltrans
DESIGN

P:\proj1\01\0a520_plans\pse\0100020425mc001.DGN

LAST REVISION 03-27-15 | DATE PLOTTED => 30-MAR-2015 | TIME PLOTTED => 08:28

Dist	COUNTY	ROUTE	POST MILES TOTAL PROJECT	SHEET No.	TOTAL SHEETS
01	HUM	299	R21.1/R21.5	33	76

Sheri M. Rodriguez 03-27-15
REGISTERED CIVIL ENGINEER DATE

03-27-15
PLANS APPROVAL DATE

REGISTERED PROFESSIONAL ENGINEER SHERI M. RODRIGUEZ No. C66861 Exp. 9-30-16 CIVIL STATE OF CALIFORNIA

THE STATE OF CALIFORNIA OR ITS OFFICERS OR AGENTS SHALL NOT BE RESPONSIBLE FOR THE ACCURACY OR COMPLETENESS OF SCANNED COPIES OF THIS PLAN SHEET.

NOTES:

1. CALIFORNIA CODES ARE DESIGNATED BY (CA). OTHERWISE, FEDERAL (MUTCD) CODES ARE SHOWN.
2. ALL SIGNS SHALL HAVE A BLACK LEGEND ON FLUORESCENT ORANGE BACKGROUND AND SHALL BE EQUIPPED WITH AT LEAST TWO 16" x 16" ORANGE FLAGS FOR DAYTIME CLOSURE OR FLASHING BEACONS FOR LANE CLOSURE DURING HOURS OF DARKNESS.
3. ALL CONES USED FOR LANE CLOSURES DURING THE HOURS OF DARKNESS SHALL BE FITTED WITH RETROREFLECTIVE BANDS OR SLEEVES.
4. WHEN A PILOT CAR IS USED, PLACE A C37 (CA) SIGN AT ALL INTERSECTIONS WITHIN TRAFFIC CONTROL AREA. WHERE VEHICULAR TRAFFIC CAN NOT EFFECTIVELY SELF-REGULATE, AT LEAST ONE FLAGGER SHALL BE USED AT EACH INTERSECTION WITHIN THE TRAFFIC CONTROL AREA.
5. FLAGGER SHOULD STAND IN A CONSPICUOUS PLACE, FACING TRAFFIC AT ALL TIMES, BE VISIBLE TO APPROACHING TRAFFIC AS WELL AS APPROACHING VEHICLES AFTER THE FIRST VEHICLE HAS STOPPED.
6. ADDITIONAL ADVANCE FLAGGERS ARE REQUIRED.
7. WHEN FLAGGER IS NOT VISIBLE FROM THIS LOCATION PLACE A C29 (CA) SIGN BELOW THE C9A (CA) SIGN.

LEGEND

- TRAFFIC CONE
- TEMPORARY SIGN
- DIRECTION OF TRAVEL
- PORTABLE FLASHING BEACON
- FLAGGER

SIGN PANEL SIZE (MINIMUM)

A	48" x 48" - SPEED OF 45 mph OR MORE 36" x 36" - SPEED LESS THAN 45 mph
B	30" x 30"
C	UNUSED
D	UNUSED
E	20" x 7"

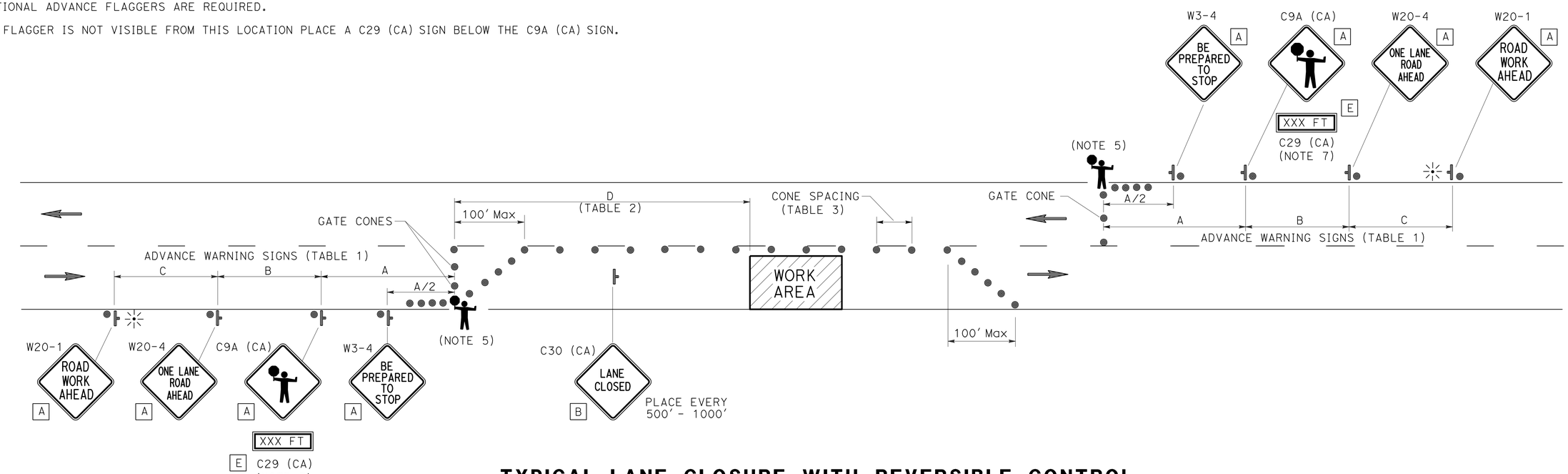

TYPICAL LANE CLOSURE WITH REVERSIBLE CONTROL

TABLE 1

ADVANCE WARNING SIGN SPACING

ROAD TYPE	Min A	Min B	Min C
	ft		
URBAN (25 mph OR LESS)	100	100	100
URBAN (30 mph TO 40 mph)	250	250	250
URBAN (MORE THAN 40 mph)	350	350	350
RURAL	500	500	500
EXPRESSWAY / FREEWAY	1000	1500	2640

TABLE 2

BUFFER SPACE

APPROACH SPEED	Min D	DOWNGRADE Min D		
		-3%*	-6%*	-9%*
mph	ft			
25 & BELOW	155	158	165	173
30	200	205	215	227
35	250	257	271	287
40	305	315	333	354
45	360	378	400	427
50	425	446	474	507
55	495	520	553	593
60	570	598	638	686
65	645	682	728	785

* USE ON SUSTAINED DOWNGRADE STEEPER THAN -3 PERCENT AND LONGER THAN 1 MILE.

TABLE 3

Max CONE SPACING

POSTED SPEED	TAPER	TANGENT	CONFLICT*
mph	ft		
20	20	40	10
25	25	50	12
30	30	60	15
35	35	70	17
40	40	80	20
45	45	90	22
50	50	100	25
55	55	110	27
60	60	120	30
65	65	130	32

* USE WHERE THERE IS A CONFLICT BETWEEN EXISTING PAVEMENT MARKINGS AND CHANNELIZERS.

TRAFFIC HANDLING PLAN

NO SCALE

APPROVED FOR TRAFFIC HANDLING WORK ONLY

TH-1

REVISED BY | DATE REVISED
SHERI M. RODRIGUEZ | TROY A. ARSENEAU
CALCULATED-DESIGNED BY | CHECKED BY
FUNCTIONAL SUPERVISOR: RICHARD MULLEN

STATE OF CALIFORNIA - DEPARTMENT OF TRANSPORTATION
Caltrans® TRAFFIC OPERATIONS

P:\proj1\01\0a520_plans\pse\0100020425md001.DGN

LAST REVISION 03-27-15 | DATE PLOTTED => 30-MAR-2015 | TIME PLOTTED => 08:28

Dist	COUNTY	ROUTE	POST MILES TOTAL PROJECT	SHEET No.	TOTAL SHEETS
01	HUM	299	R21.1/R21.5	34	76

Edward B Speer 03-27-15
REGISTERED CIVIL ENGINEER DATE

03-27-15
PLANS APPROVAL DATE

REGISTERED PROFESSIONAL ENGINEER EDWARD B. SPEER No. C49740 Exp. 09-30-16 CIVIL STATE OF CALIFORNIA

THE STATE OF CALIFORNIA OR ITS OFFICERS OR AGENTS SHALL NOT BE RESPONSIBLE FOR THE ACCURACY OR COMPLETENESS OF SCANNED COPIES OF THIS PLAN SHEET.

LEGEND

- #-# PAVEMENT DELINEATION STRIPE DETAIL No.
- DIRECTION OF TRAFFIC
- C CULVERT MARKER
- SINGLE STRIPE MARKER
- DELINEATOR (TYPE E)
- #-# ROADSIDE SIGN NUMBER
- REMOVE ROADSIDE SIGN
- EXISTING SIGN TO REMAIN
- S=##.# SPACING BETWEEN DELINEATORS (FT)

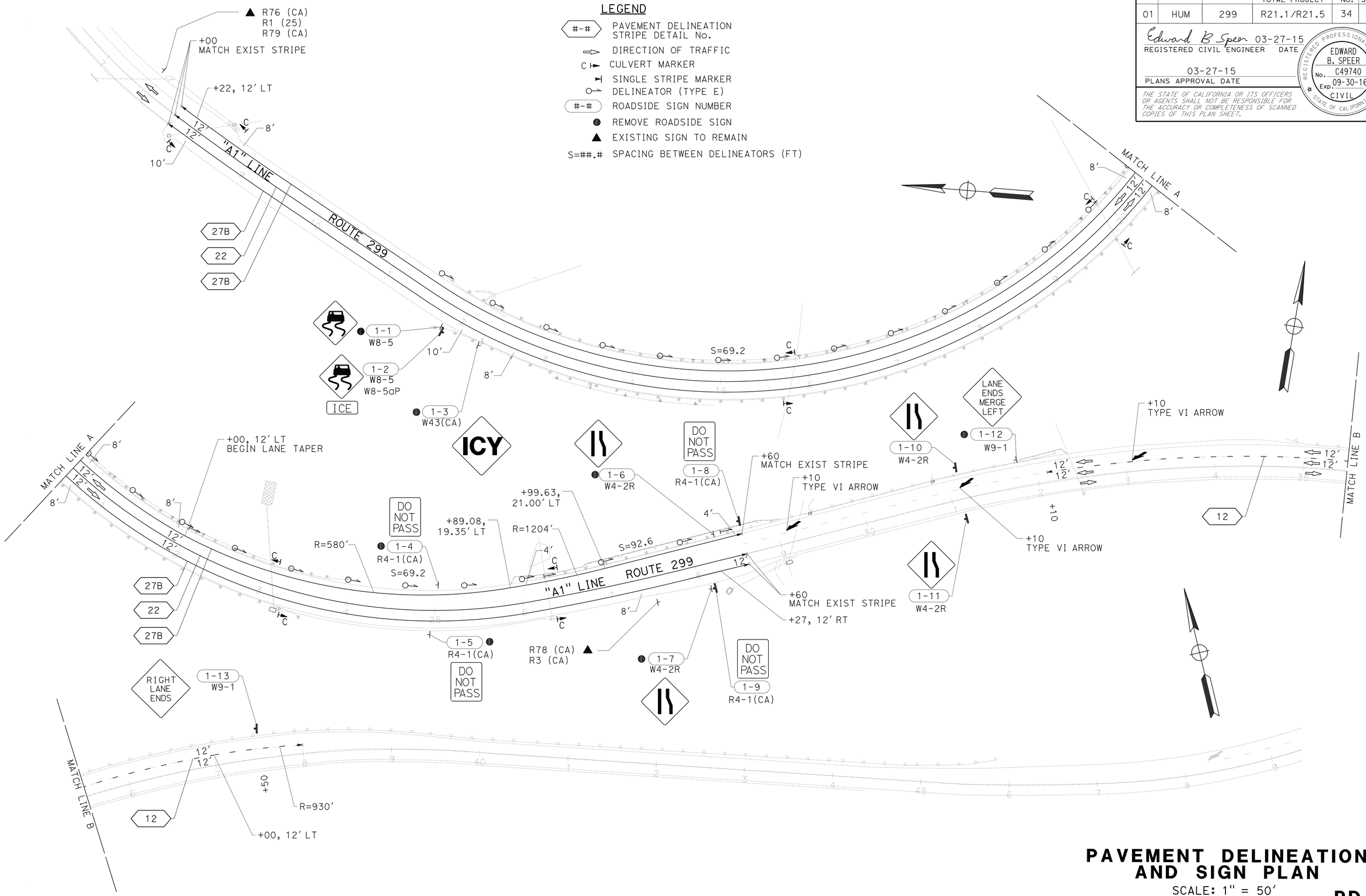

APPROVED FOR PAVEMENT DELINEATION WORK ONLY

PAVEMENT DELINEATION AND SIGN PLAN

SCALE: 1" = 50'

PD-1

REVISED BY	DATE REVISED
JOLENA ASTIN	ED SPEER
CALCULATED-DESIGNED BY	CHECKED BY
FUNCTIONAL SUPERVISOR	JOHN L. MARTIN

STATE OF CALIFORNIA - DEPARTMENT OF TRANSPORTATION
Caltrans
DESIGN

P:\proj1\01\0a520_plans\pse\0100020425na001.dgn

LAST REVISION 03-27-15
DATE PLOTTED => 30-MAR-2015
TIME PLOTTED => 08:28

Dist	COUNTY	ROUTE	POST MILES TOTAL PROJECT	SHEET No.	TOTAL SHEETS
01	HUM	299	R21.1/R21.5	35	76

Edward B Speer 03-27-15
REGISTERED CIVIL ENGINEER DATE

03-27-15
PLANS APPROVAL DATE

REGISTERED PROFESSIONAL ENGINEER
EDWARD B. SPEER
No. C49740
Exp. 09-30-16
CIVIL
STATE OF CALIFORNIA

THE STATE OF CALIFORNIA OR ITS OFFICERS OR AGENTS SHALL NOT BE RESPONSIBLE FOR THE ACCURACY OR COMPLETENESS OF SCANNED COPIES OF THIS PLAN SHEET.

NOTES:

1. EXACT LOCATION AND POSITION OF ROADSIDE SIGN TO BE DETERMINED BY THE ENGINEER.
2. POST SIZE AND LENGTH GIVEN ARE APPROXIMATE.
3. CALIFORNIA CODES ARE DESIGNATED BY (CA), OTHERWISE FEDERAL CODES ARE SHOWN.
4. (N) NOT A SEPARATE PAY ITEM, FOR INFORMATION ONLY.
5. "C" DIM = VERTICAL CLEARANCE EP TO BOTTOM OF SIGN PANEL.

PAVEMENT DELINEATION QUANTITIES

PD SHEET	LOCATION	THERMOPLASTIC PAVEMENT MARKING	THERMOPLASTIC TRAFFIC STRIPE (ENHANCED WET NIGHT VISIBILITY)			PAVEMENT MARKER (RETROREFLECTIVE-RECESSED)	
			WHITE	WHITE	YELLOW		
			4" (BROKEN 18'-12')	4"	4"		
			DETAIL	DETAIL	DETAIL		
			12	27B	22	TYPE G	TYPE D
		SQFT	LF	LF	LF	EA	EA
PD-1	"A1" 8+00 TO "A1 38+00	126	694	4073	4120	59	345
	TOTAL	126	694	8193		404	

DELINEATORS AND MARKERS

LOCATION	MARKER (CULVERT)	DELINEATOR (TYPE E)
	EA	EA
"A1" 8+00 TO "A1" 28+60	10	23
TOTAL	10	23

ROADSIDE SIGNS

SIGN No.	DIRECTION	SIGN CODE	PANEL SIZE INCHES	REMOVE ROADSIDE SIGN	TREATED WOOD WASTE	ROADSIDE SIGN ONE POST	(N) "C" DIM	(N) POST SIZE AND LENGTH (LF) METAL POST 2½" x 2½"	COMMENT
				EA	LB	EA	FT		
1-1	FEBT	W8-5	36 x 36	1	68				SLIPPERY WHEN WET SYMBOL
1-2	FEBT	W8-5	36 x 36			1	7	13.5	SLIPPERY WHEN WET SYMBOL
		W8-5aP	24 x 12						ICE
1-3	FEBT	SPL	48 x 48	1					ICY (METAL POST)
1-4	FWBT	R4-1(CA)	24 x 30	1	39				DO NOT PASS
1-5	FEBT	R4-1(CA)	24 x 30	1	39				DO NOT PASS
1-6	FWBT	W4-2R	36 x 36	1	68				RIGHT LANE ENDS SYMBOL
1-7	FEBT	W4-2R	36 x 36	1	68				RIGHT LANE ENDS SYMBOL
1-8	FWBT	R4-1(CA)	24 x 30			1	7	12.2	DO NOT PASS
1-9	FWBT	R4-1(CA)	24 x 30			1	7	12.2	DO NOT PASS
1-10	FWBT	W4-2R	36 x 36			1	7	13.5	RIGHT LANE ENDS SYMBOL
1-11	FWBT	W4-2R	36 x 36			1	7	13.5	RIGHT LANE ENDS SYMBOL
1-12	FWBT	W9-1	36 x 36	1	72				LANE ENDS MERGE LEFT
1-13	FWBT	W9-1	36 x 36			1	7	13.5	RIGHT LANE ENDS
			TOTAL	7	354*	6			

* ADDITIONAL QUANTITIES SHOWN ELSEWHERE, SEE SHEET Q-1

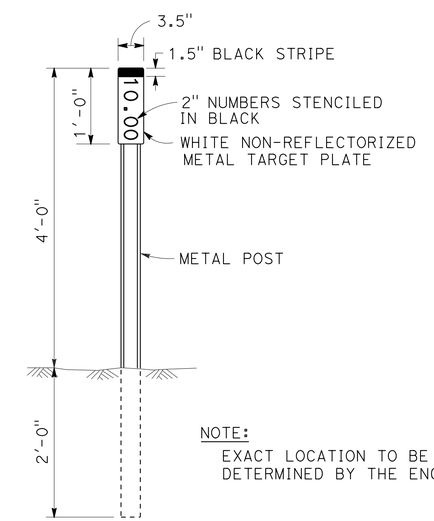

NOTE:
EXACT LOCATION TO BE DETERMINED BY THE ENGINEER

MARKER (CULVERT)

PAVEMENT DELINEATION AND SIGN QUANTITIES

NO SCALE

PDQ-1

REVISED BY | DATE REVISED
JOLENA ASTIN | ED SPEER
CALCULATED-DESIGNED BY | CHECKED BY
FUNCTIONAL SUPERVISOR: JOHN L. MARTIN
STATE OF CALIFORNIA - DEPARTMENT OF TRANSPORTATION
Caltrans® DESIGN
P:\proj1\01\0a520_plans\pse\0100020425nc001.dgn

LAST REVISION 03-27-15 | DATE PLOTTED => 30-MAR-2015 | TIME PLOTTED => 08:28

Dist	COUNTY	ROUTE	POST MILES TOTAL PROJECT	SHEET No.	TOTAL SHEETS
01	HUM	299	R21.1/R21.5	36	76

Edward B Speer 03-27-15
REGISTERED CIVIL ENGINEER DATE

03-27-15
PLANS APPROVAL DATE

REGISTERED PROFESSIONAL ENGINEER
EDWARD B. SPEER
No. C49740
Exp. 09-30-16
CIVIL
STATE OF CALIFORNIA

THE STATE OF CALIFORNIA OR ITS OFFICERS OR AGENTS SHALL NOT BE RESPONSIBLE FOR THE ACCURACY OR COMPLETENESS OF SCANNED COPIES OF THIS PLAN SHEET.

NOTE:

1. CALIFORNIA SIGN CODES ARE DESIGNATED BY (CA), OTHERWISE, FEDERAL MUTCD SIGN CODES ARE SHOWN.

ABBREVIATIONS:

L LENGTH OF SIGN
D DEPTH OF SIGN

ROADSIDE SIGN PANELS

SIGN NO.	DIRECTION	SIGN CODE	SIGN MESSAGE/ DESCRIPTION	PANEL SIZE L x D INCHES	SINGLE FACED	SIGN FACING MATERIAL						FURNISH SINGLE SHEET ALUMINUM SIGN		RETROREFLECTIVE SHEETING (TYPE XI)
						BACKGROUND		LEGEND		PROTECTIVE FILM		UNFRAMED		
						SHEETING COLOR	RETROREFLECTIVE ASTM TYPE	SHEETING COLOR	RETROREFLECTIVE ASTM TYPE	STANDARD	PREMIUM	0.063"	0.063" FOR RETROREFLECTIVE SHEETING (TYPE XI)	
												SQFT	SQFT	SQFT
1-2	FEBT	W8-5	SLIPPERY WHEN WET SYMBOL	36 X 36	X	FL. YELLOW	XI	BLACK			X		9.0	9.0
1-2	FEBT	W8-5aP	ICE	24 X 12	X	FL. YELLOW	XI	BLACK			X		2.0	2.0
1-8	FWBT	R4-1(CA)	DO NOT PASS	24 X 30	X	WHITE	IX	BLACK			X	5.0		
1-9	FWBT	R4-1(CA)	DO NOT PASS	24 X 30	X	WHITE	IX	BLACK			X	5.0		
1-10	FWBT	W4-2R	RIGHT LANE ENDS SYMBOL	36 X 36	X	FL. YELLOW	XI	BLACK			X		9.0	9.0
1-11	FWBT	W4-2R	RIGHT LANE ENDS SYMBOL	36 X 36	X	FL. YELLOW	XI	BLACK			X		9.0	9.0
1-13	FWBT	W9-1	RIGHT LANE ENDS	36 X 36	X	FL. YELLOW	XI	BLACK			X		9.0	9.0
											TOTAL	10.0	38.0	38.0

PAVEMENT DELINEATION AND SIGN QUANTITIES

PDQ-2

REVISED BY | DATE REVISED
JOLENA ASTIN | ED SPEER
CALCULATED-DESIGNED BY | CHECKED BY
FUNCTIONAL SUPERVISOR: JOHN L. MARTIN

STATE OF CALIFORNIA - DEPARTMENT OF TRANSPORTATION
Caltrans® DESIGN

P:\proj1\01\0a520_plans\pse\0100020425nc002.dgn

LAST REVISION 03-27-15 | DATE PLOTTED => 30-MAR-2015 | TIME PLOTTED => 08:28

Dist	COUNTY	ROUTE	POST MILES TOTAL PROJECT	SHEET No.	TOTAL SHEETS
01	HUM	299	R21.1/R21.5	37	76

Edward B Speer 03-27-15
REGISTERED CIVIL ENGINEER DATE

03-27-15
PLANS APPROVAL DATE

REGISTERED PROFESSIONAL ENGINEER EDWARD B. SPEER No. C49740 Exp. 09-30-16 CIVIL STATE OF CALIFORNIA

THE STATE OF CALIFORNIA OR ITS OFFICERS OR AGENTS SHALL NOT BE RESPONSIBLE FOR THE ACCURACY OR COMPLETENESS OF SCANNED COPIES OF THIS PLAN SHEET.

NOTE:

1. (N) - NOT A SEPARATE PAY ITEM, FOR INFORMATION ONLY

ROADWAY QUANTITIES

STAGE	"A1" STATION	ROADWAY EXCAVATION	SHOULDER BACKING	IMPORTED BORROW (CY)	(N) EMB *	COLD PLANE ASPHALT CONCRETE PAVEMENT	REPLACE ASPHALT CONCRETE SURFACING	CLASS 2 AGGREGATE BASE (CY)	HMA (TYPE A)	(N) VARIABLE DEPTH HMA (TYPE A)	HMA-OPEN GRADED (OGFC)	ASPHALT BINDER (GPI)	GPI (PAVING FABRIC)	RUMBLE STRIP (HMA, GROUND-IN INDENTATIONS)		PLACE HMA DIKE		PLACE HMA (MISC AREA) (SQYD)	5" SMALL-ROCK SLOPE PROTECTION **	TACK COAT
														℄	SHLD	(TYPE A)	(TYPE F)			
		CY	TON	CY	CY	SQYD	CY	CY	TON	TON	TON	TON	SQYD	STA	STA	LF	LF	SQYD	CY	TON
1	11+51.14 TO 23+50.04	69		123	192				373											0.13
2	13+69.00 TO 23+00.00	10,541			409			1011	897							1125				0.22
3	8+00.00 TO 28+60.00	2160	57		234	2021	74	1132	762	728	908	1.48	968	19.9	35.6		219	9	19	2.00
	TOTAL	12,770	57	123	835	2021	74	2143	2032	728***	908	1.48	968	19.9	35.6	1125	219	9	19	2.35

* NO SHRINK/SWELL FACTOR APPLIED
** RSP FABRIC NOT REQUIRED
*** INCLUDED IN HMA (TYPE A) QUANTITY

MECHANICALLY STABILIZED EMBANKMENT

STATION	MSE	(N) STRUCTURE BACKFILL	(N) GEOGRID		(N) CRUSHED ROCK BASE	(N) FILTER FABRIC	(N) GABION ROCK
			BIAXIAL	UNIAXIAL			
	SQFT	CY	SQYD	SQYD	CY	SQYD	CY
"A1" 13+69 TO "A1" 23+00	12,578	9417	1385	18,101	816	2360	600

TREATED WOOD WASTE

SOURCE	TWW
	LB
SIGN POSTS	354*
GUARDRAIL POSTS	28,940
TOTAL	29,294

* SEE SHEET PDQ-1

WEED CONTROL MAT (FIBER)

LOCATION	WEED MAT SQYD
UNDER GUARDRAIL POSTS	833
UNDER ROADSIDE SIGNS	6
TOTAL	839

STORM WATER POLLUTION PREVENTION

ITEM	UNIT	QUANTITY
RAIN EVENT ACTION PLAN (REAP)	EA	7
STORMWATER SAMPLING AND ANALYSIS DAY	EA	10
STORMWATER ANNUAL REPORT	EA	2
TEMPORARY COVER	SQYD	1000
TEMPORARY DRAINAGE INLET PROTECTION	EA	4
TEMPORARY FIBER ROLL	LF	400
TEMPORARY SILT FENCE	LF	1000
TEMPORARY CONSTRUCTION ENTRANCE	EA	1

TEMPORARY FENCE (TYPE ESA)

STATION	ESA FENCE
	LF
"A1" 11+48, LEFT	40
"A1" 26+53 TO 28+03, RIGHT	156
TOTAL	196

SAFETY EDGE

STATION	(N) SAFETY EDGE
	LF
"A1" 8+70 TO "A1" 11+58, LEFT	288
"A1" 8+17 TO "A1" 11+92, RIGHT	378
"A1" 24+00 TO "A1" 26+12, LEFT	212
"A1" 23+33 TO "A1" 28+15, RIGHT	482
TOTAL	1360

GUARDRAIL

REMOVE GUARDRAIL	REMOVE CONCRETE	WEED CONTROL MAT (FIBER)	RECONSTRUCT GUARDRAIL	MIDWEST GUARDRAIL SYSTEM (STEEL POST)	ALTERNATIVE FLARED TERMINAL SYSTEM	(N) BURIED POST END ANCHOR	RAIL ELEMENT WALL	TREATED WOOD WASTE
LF	CY	SQYD	LF	LF	EA	EA	SQFT	LB
2436	9.5	833	219	2403	4	1	475	28,940*

* ADDITIONAL QUANTITIES SHOWN IN "TREATED WOOD WASTE" TABLE THIS SHEET

SUMMARY OF QUANTITIES
Q-1

REVISED BY | DATE REVISED
JOLENA ASTIN | ED SPEER
CALCULATED-DESIGNED BY | CHECKED BY
FUNCTIONAL SUPERVISOR: JOHN L. MARTIN
STATE OF CALIFORNIA - DEPARTMENT OF TRANSPORTATION
Caltrans® DESIGN
P:\proj1\01\0a520_plans\pse\0100020425pa001.dgn

LAST REVISION 03-27-15 | DATE PLOTTED => 30-MAR-2015 | TIME PLOTTED => 08:28

Dist	COUNTY	ROUTE	POST MILES TOTAL PROJECT	SHEET No.	TOTAL SHEETS
01	HUM	299	R21.1/R21.5	38	76

Laura Lazzarotto
LICENSED LANDSCAPE ARCHITECT

03-27-15
PLANS APPROVAL DATE

LICENSED LANDSCAPE ARCHITECT
Laura Lazzarotto
Signature
8-31-15
Renewal Date
03-26-15
Date
STATE OF CALIFORNIA

THE STATE OF CALIFORNIA OR ITS OFFICERS OR AGENTS SHALL NOT BE RESPONSIBLE FOR THE ACCURACY OR COMPLETENESS OF SCANNED COPIES OF THIS PLAN SHEET.

NOTES:

1. FOR ACCURATE RIGHT OF WAY DATA, CONTACT RIGHT OF WAY ENGINEERING AT THE DISTRICT OFFICE.

LEGEND:

EROSION CONTROL TYPE 1

EROSION CONTROL TYPE 2

BIOFILTRATION SWALE
EROSION CONTROL TYPE 3

FR FIBER ROLLS

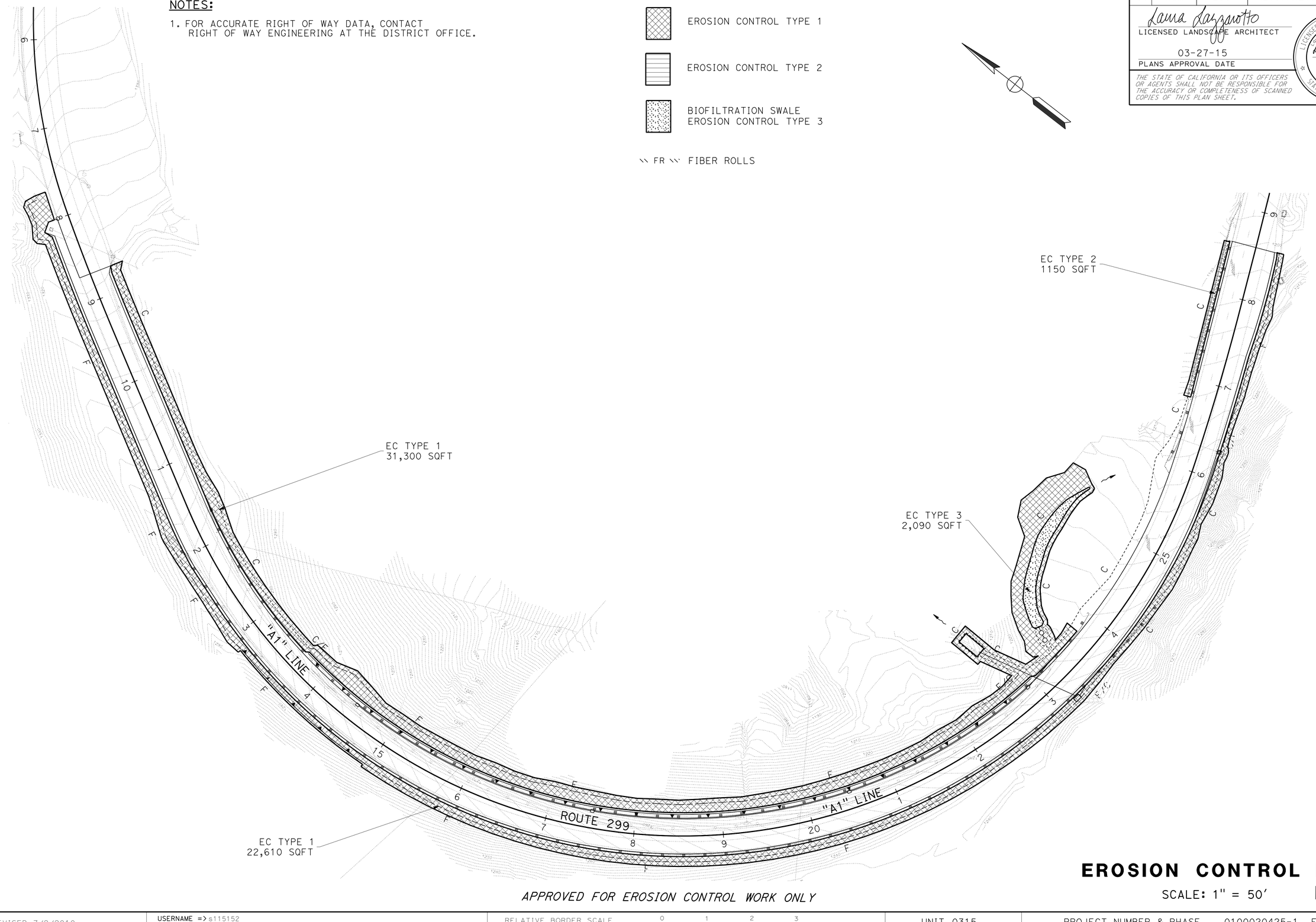

APPROVED FOR EROSION CONTROL WORK ONLY

EROSION CONTROL PLAN

SCALE: 1" = 50'

EC-1

LAST REVISION	03-26-15
DATE PLOTTED =>	30-MAR-2015
TIME PLOTTED =>	08:29

STATE OF CALIFORNIA - DEPARTMENT OF TRANSPORTATION	
Caltrans® LANDSCAPE ARCHITECTURE	
SENIOR LANDSCAPE ARCHITECT	RON FLORY
CALCULATED-DESIGNED BY	LOGAN MOORE
CHECKED BY	LAURA LAZZAROTTO
REVISED BY	L. MOORE
DATE REVISED	3/4/15

P:\proj1\01\0a520_plans\pse\0100020425ta001.dgn

BORDER LAST REVISED 7/2/2010 | USERNAME => s115152 | DGN FILE => 0100020425ta001.dgn | RELATIVE BORDER SCALE IS IN INCHES 0 1 2 3 | UNIT 0315 | PROJECT NUMBER & PHASE 0100020425-1 EA 01-0A5201

Dist	COUNTY	ROUTE	POST MILES TOTAL PROJECT	SHEET No.	TOTAL SHEETS
01	HUM	299	R21.1/R21.5	39	76

Laura Lazzarotto
LICENSED LANDSCAPE ARCHITECT

03-27-15
PLANS APPROVAL DATE

LICENSED LANDSCAPE ARCHITECT
Laura Lazzarotto
Signature
8-31-15
Renewal Date
03-26-15
Date
STATE OF CALIFORNIA

THE STATE OF CALIFORNIA OR ITS OFFICERS OR AGENTS SHALL NOT BE RESPONSIBLE FOR THE ACCURACY OR COMPLETENESS OF SCANNED COPIES OF THIS PLAN SHEET.

NOTES:

1. FOR ACCURATE RIGHT OF WAY DATA, CONTACT RIGHT OF WAY ENGINEERING AT THE DISTRICT OFFICE.

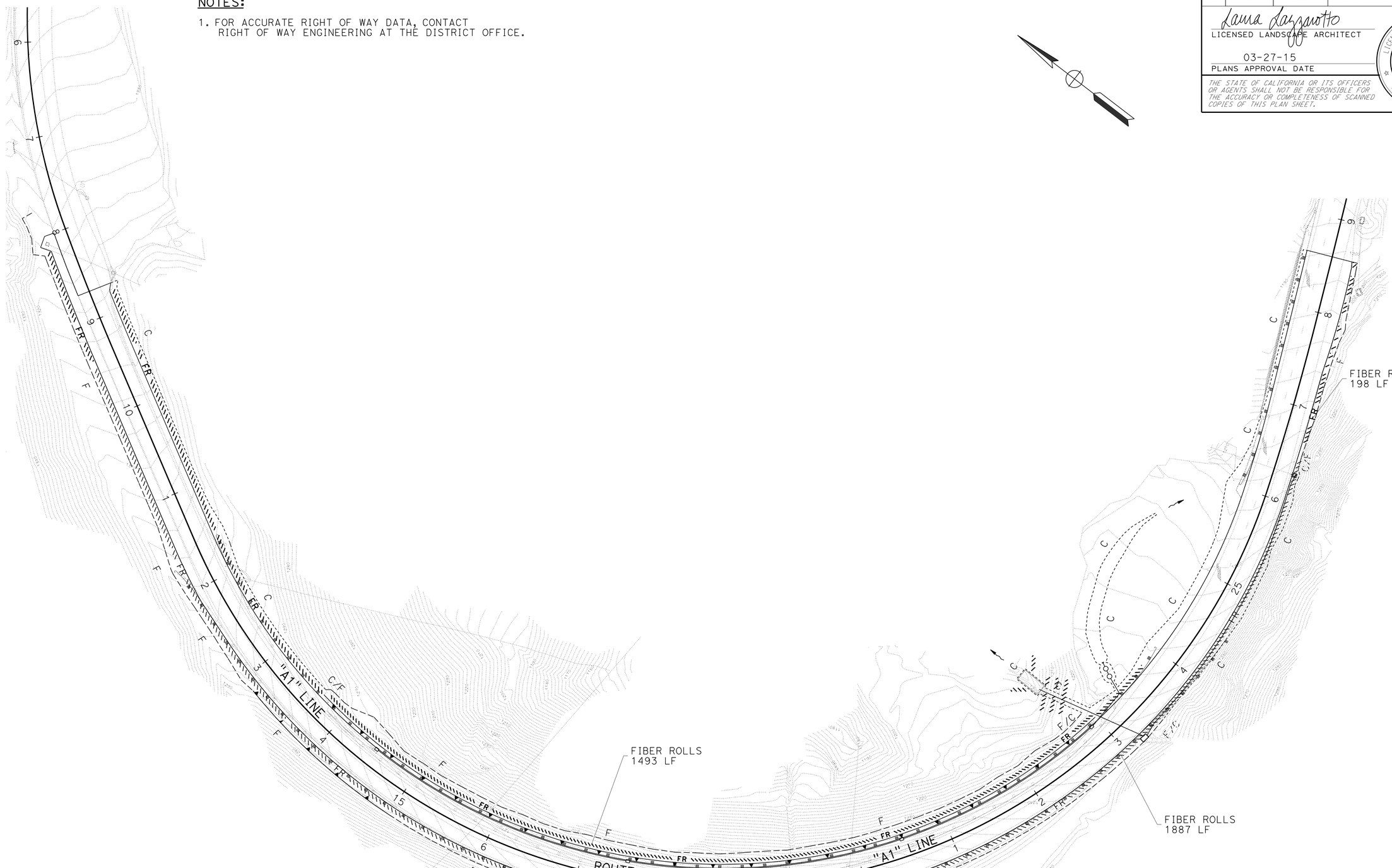

APPROVED FOR EROSION CONTROL WORK ONLY

EROSION CONTROL PLAN

SCALE: 1" = 50'

EC-2

STATE OF CALIFORNIA - DEPARTMENT OF TRANSPORTATION
Caltrans® LANDSCAPE ARCHITECTURE

SENIOR LANDSCAPE ARCHITECT: RON FLORY
CALCULATED-DESIGNED BY: LOGAN MOORE
CHECKED BY: LAURA LAZZAROTTO
REVISED BY: L. MOORE
DATE REVISED: 3/4/15

P:\proj1\01\0as520_plans\pse\0100020425ta002.dgn

LAST REVISION 03-26-15
DATE PLOTTED => 30-MAR-2015
TIME PLOTTED => 08:29

BORDER LAST REVISED 7/2/2010
USERNAME => s115152
DGN FILE => 0100020425ta002.dgn
RELATIVE BORDER SCALE IS IN INCHES 0 1 2 3
UNIT 0315
PROJECT NUMBER & PHASE 0100020425-1 EA 01-0A5201

Dist	COUNTY	ROUTE	POST MILES TOTAL PROJECT	SHEET No.	TOTAL SHEETS
01	HUM	299	R21.1/R21.5	40	76

LICENSED LANDSCAPE ARCHITECT

03-27-15
PLANS APPROVAL DATE

LICENSED LANDSCAPE ARCHITECT
RONALD MARTIN FLORY
#4981
09-30-16
Renewal date
03-20-15
Date
STATE OF CALIFORNIA

THE STATE OF CALIFORNIA OR ITS OFFICERS OR AGENTS SHALL NOT BE RESPONSIBLE FOR THE ACCURACY OR COMPLETENESS OF SCANNED COPIES OF THIS PLAN SHEET.

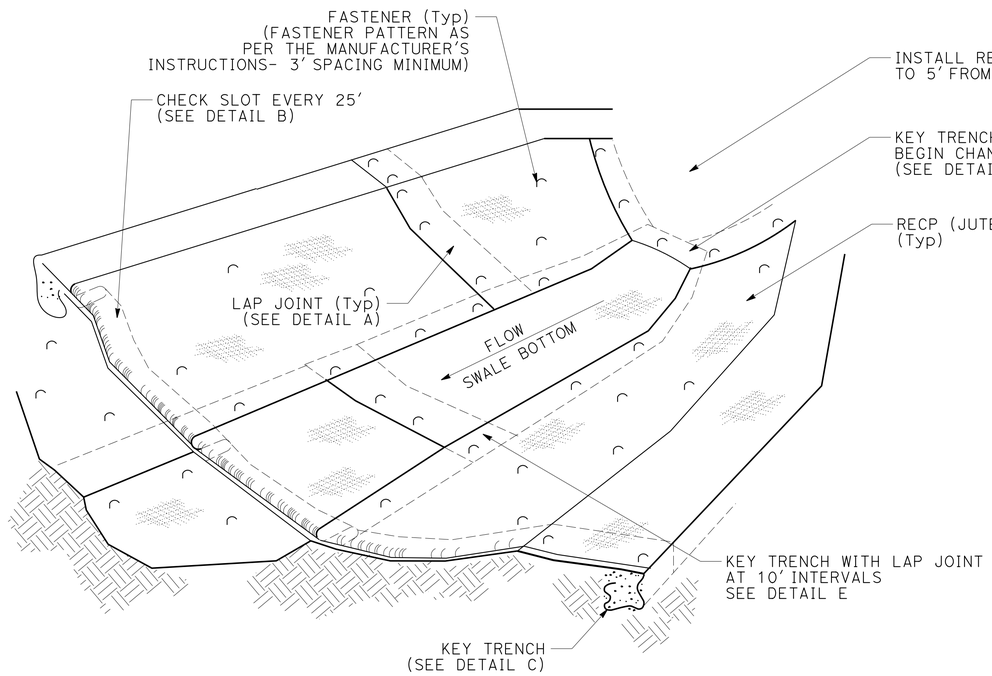

ISOMETRIC

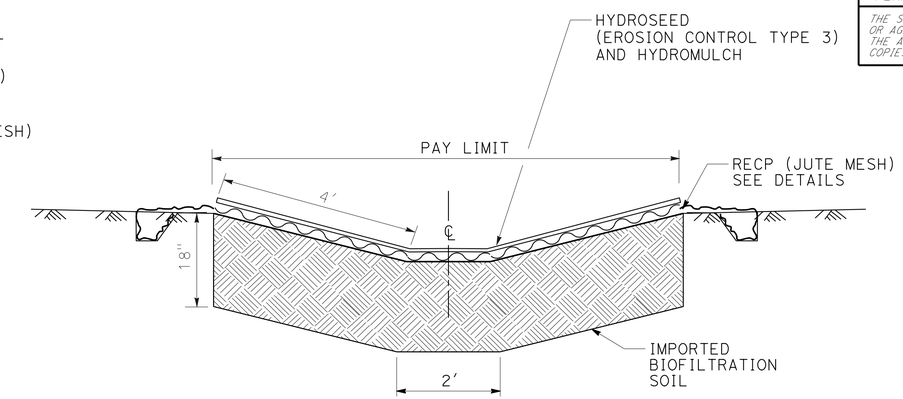

SECTION (Typ)

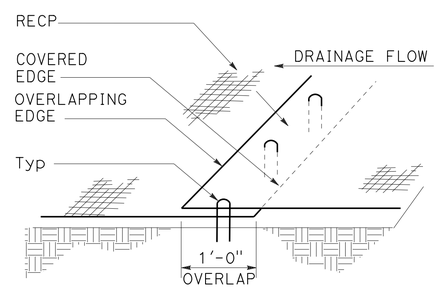

PERSPECTIVE

DETAIL A
LAP JOINT

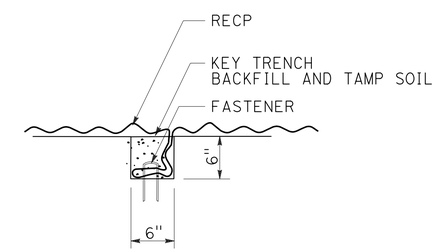

SECTION

DETAIL B

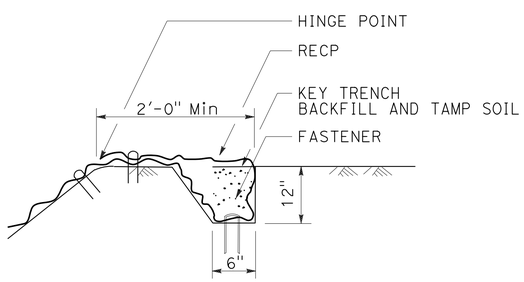

SECTION

DETAIL C
KEY TRENCH AT TOP OF SLOPE

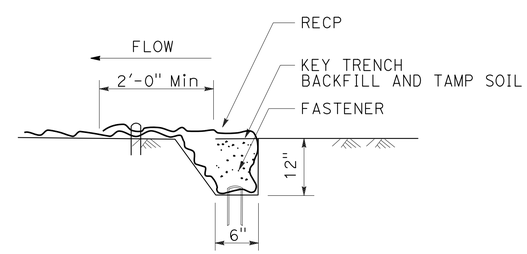

SECTION

DETAIL D
KEY TRENCH AT BEGIN/END SWALE

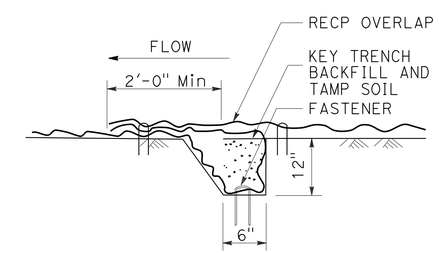

SECTION

DETAIL E
KEY TRENCH WITH LAP JOINT

BIOFILTRATION SWALE

EROSION CONTROL DETAILS

NO SCALE

EC-3

REVISED BY | DATE REVISED
ROBIN SOLARI | ED SPEER
CALCULATED-DESIGNED BY | CHECKED BY
FUNCTIONAL SUPERVISOR | RON FLORY

STATE OF CALIFORNIA - DEPARTMENT OF TRANSPORTATION
Caltrans® LANDSCAPE ARCHITECTURE

P:\proj1\01\0a520_plans\pse\0100020425tb001.dgn

LAST REVISION 03-20-15 | DATE PLOTTED => 30-MAR-2015 | TIME PLOTTED => 08:29

BORDER LAST REVISED 7/2/2010 | USERNAME => s115152 | DGN FILE => 0100020425tb001.dgn | RELATIVE BORDER SCALE IS IN INCHES 0 1 2 3 | UNIT 0315 | PROJECT NUMBER & PHASE 0100020425-1 | EA 01-0A5201

Dist	COUNTY	ROUTE	POST MILES TOTAL PROJECT	SHEET No.	TOTAL SHEETS
01	HUM	299	R21.1/R21.5	41	76

LICENSED LANDSCAPE ARCHITECT

03-27-15
PLANS APPROVAL DATE

LICENSED LANDSCAPE ARCHITECT
RONALD MARTIN FLORY
#4981
09-30-16
Renewal Date
03-20-15
Date
STATE OF CALIFORNIA

THE STATE OF CALIFORNIA OR ITS OFFICERS OR AGENTS SHALL NOT BE RESPONSIBLE FOR THE ACCURACY OR COMPLETENESS OF SCANNED COPIES OF THIS PLAN SHEET.

BIOFILTRATION SWALE QUANTITIES

SHEET	STATION "B1" LINE	LENGTH	AREA	DESCRIPTION	IMPORTED BIOFILTRATION SOIL	(N) COMPOST	(N) SAND	(N) TOPSOIL	HYDROSEED	HYDROMULCH	RECP (JUTE MESH)	(N) PURE LIVE SEED
		LF	SQFT		CY	CY	CY	CY	SQFT	SQFT	SQFT	LBS
EC-1	0+36.97 TO 2+17.43	180.46	2090	EC TYPE 3	--	--	--	--	2090*	2090*	2090	1.7*
EC-3	0+36.97 TO 2+17.43	180.46	2090	BIOFILTRATION SOIL	118.0	33.7	67.4	16.9	--	--	--	--

(N) NOT A SEPARATE PAY ITEM, FOR INFORMATION ONLY
* ADDITIONAL QUANTITIES SHOWN ON "EROSION CONTROL QUANTITIES" TABLE THIS SHEET

EROSION CONTROL QUANTITIES

SHEET	STATION "A1" LINE	DESCRIPTION	HYDROSEED	STRAW	HYDROMULCH	FIBER ROLLS	WOOD MULCH	PURE LIVE SEED (N)
			SQFT	SQFT	SQFT	LF	CY	LBS
EC-1	08+70 TO 25+36 L+	EC TYPE 1	31,300	31,300	31,300	-	-	117.8
EC-1	07+68 TO 28+60 R+	EC TYPE 1	22,610	22,610	22,610	-	-	85.1
EC-1	26+81 TO 28+62 L+	EC TYPE 2	-	-	-	-	9.4	-
EC-2	08+70 TO 23+79 L+	FIBER ROLL	-	-	-	1493	-	-
EC-2	07+91 TO 26+40 R+	FIBER ROLL	-	-	-	1887	-	-
EC-2	26+58 TO 28+60 R+	FIBER ROLL	-	-	-	198	-	-
		BIOFILTRATION SWALE	2090	-	2090	-	-	1.7
		TOTAL	56,000	53,910	56,000	3578	9.4	204.6

(N) NOT A SEPARATE PAY ITEM, FOR INFORMATION ONLY

FIBER ROLLS

SEQUENCE	ITEM	MATERIAL		REMARKS
		DESCRIPTION	TYPE	
FIBER ROLLS MUST BE INSTALLED BEFORE EROSION CONTROL	FIBER ROLLS	FIBER ROLL	TYPE B 8" TO 10" Dia	TYPE 1 FIBER ROLL INSTALLATION

EROSION CONTROL TYPE 1

SEQUENCE	ITEM	MATERIAL		APPLICATION RATE
		DESCRIPTION	TYPE	
STEP 1	HYDROSEED	SEED	MIX 1	164 LB/ACRE
		FIBER	WOOD	1100 LB/ACRE
		COMPOST	MEDIUM	270 CY/ACRE
STEP 2	STRAW	STRAW	WHEAT &/OR BARLEY	3 TON/ACRE
STEP 3	HYDROMULCH	FIBER	WOOD	1100 LB/ACRE
		TACKIFIER	PSYLLIUM	140 LB/ACRE
		COMPOST	MEDIUM	270 CY/ACRE

SEED MIX 1

SEED	BOTANICAL NAME (COMMON NAME)	PERCENT GERMINATION (MINIMUM)	POUNDS PURE LIVE SEED PER ACRE (SLOPE MEASUREMENT)
MIX 1	ACHILLEA MILLEFOLIUM [1] (WHITE YARROW)	45	2
	ELYMUS ELYMOIDES [1] (BOTTLEBRUSH SQUIRREL TAIL)	45	10
	ELYMUS GLAUCUS 'SHASTA TRINITY' [1] (WILD RYE, SHASTA TRINITY)	55	40
	FESTUCA 'MOLATE BLUE' [1] (MOLATE BLUE FESCUE)	65	12
	HORDEUM VULGARE (COMMON BARLEY)	75	90
	LOTUS PURSHIANUS (PURSHING'S LOTUS)	45	10

[1] SEED PRODUCED IN CALIFORNIA ONLY

EROSION CONTROL TYPE 2

SEQUENCE	ITEM	MATERIAL		APPLICATION RATE
		DESCRIPTION	TYPE	
STEP 1	WOOD MULCH	WOOD MULCH	WOOD CHIPS	355 CY/ACRE

SEED MIX 2

SEED	BOTANICAL NAME (COMMON NAME)	PERCENT GERMINATION (MINIMUM)	POUNDS PURE LIVE SEED PER ACRE (SLOPE MEASUREMENT)
MIX 2	ASCLEPIAS FASCICULARIS [1] (NARROW-LEAF MILKWEED)	80	5
	AGOSTIS EXARATA [1] (SPIKE BENTGRASS)	80	3
	CAREX PRAEGRACILIS [1] (CLUSTERED FIELD SEDGE)	85	4
	DESCHAMPSIA CAESPITOSA [1] (TUFTED HAIRGRASS)	85	2
	HORDEUM BRACHYANTHERUM [1] (MEADOW BARLEY)	80	20
	ACHILLEA MILLEFOLIUM [1] (WHITE YARROW)	70	1

[1] SEED PRODUCED IN CALIFORNIA ONLY

EROSION CONTROL TYPE 3

SEQUENCE	ITEM	MATERIAL		APPLICATION RATE	REMARKS
		DESCRIPTION	TYPE		
STEP 1	IMPORTED BIOFILTRATION SOIL	SAND, COMPOST, TOPSOIL	--	2420 CY/ACRE	SEE SPECIAL PROVISIONS
STEP 2	RECP	JUTE MESH	--	43,560 SQFT/ACRE	
STEP 3	HYDROSEED	SEED	MIX 2	35 LB/ACRE	
		FIBER	WOOD	1100 LB/ACRE	
		COMPOST	MEDIUM	270 CY/ACRE	
STEP 3	HYDROMULCH	FIBER	WOOD	1100 LB/ACRE	
		TACKIFIER	PSYLLIUM	140 LB/ACRE	
		COMPOST	MEDIUM	270 CY/ACRE	

EROSION CONTROL LEGEND AND QUANTITIES
ECL-1

REVISED BY | DATE REVISED
LOGAN MOORE | ED SPEER
CALCULATED-DESIGNED BY | CHECKED BY
FUNCTIONAL SUPERVISOR: RON FLORY

STATE OF CALIFORNIA - DEPARTMENT OF TRANSPORTATION
Caltrans® LANDSCAPE ARCHITECTURE

P:\proj1\01\0a520_plans\pse\0100020425tc001.dgn

LAST REVISION 03-20-15 | DATE PLOTTED => 30-MAR-2015 | TIME PLOTTED => 08:29

Dist	COUNTY	ROUTE	POST MILES TOTAL PROJECT	SHEET No.	TOTAL SHEETS
01	Hum	299	R21.1/R21.5	42	76

ART 03-27-15
REGISTERED ELECTRICAL ENGINEER DATE

03-27-15
PLANS APPROVAL DATE

REGISTERED PROFESSIONAL ENGINEER A.P. ROBLES No. E15293 Exp. 3-31-15 ELECTRICAL STATE OF CALIFORNIA

THE STATE OF CALIFORNIA OR ITS OFFICERS OR AGENTS SHALL NOT BE RESPONSIBLE FOR THE ACCURACY OR COMPLETENESS OF SCANNED COPIES OF THIS PLAN SHEET.

NOTE:

FOR ACCURATE RIGHT OF WAY DATA, CONTACT RIGHT OF WAY ENGINEERING AT THE DISTRICT OFFICE.

LEGEND (THIS SHEET):

1 1"C, 2#12 (FB), 1#12 G.

2 1½"C, 2#12 (FB), 1#12 G, 1 DLC.

LEGEND:

ROADWAY 1 LED WITH 12' LMA

GENERATORS

Ped PUSH BUTTON

TEMPORARY FLASHING BEACON

ABBREVIATIONS:

ATS AUTOMATIC TRANSFER SWITCH
Cab CABINET
BFB BIKE FLASHING BEACON
SI SIGN ILLUMINATION

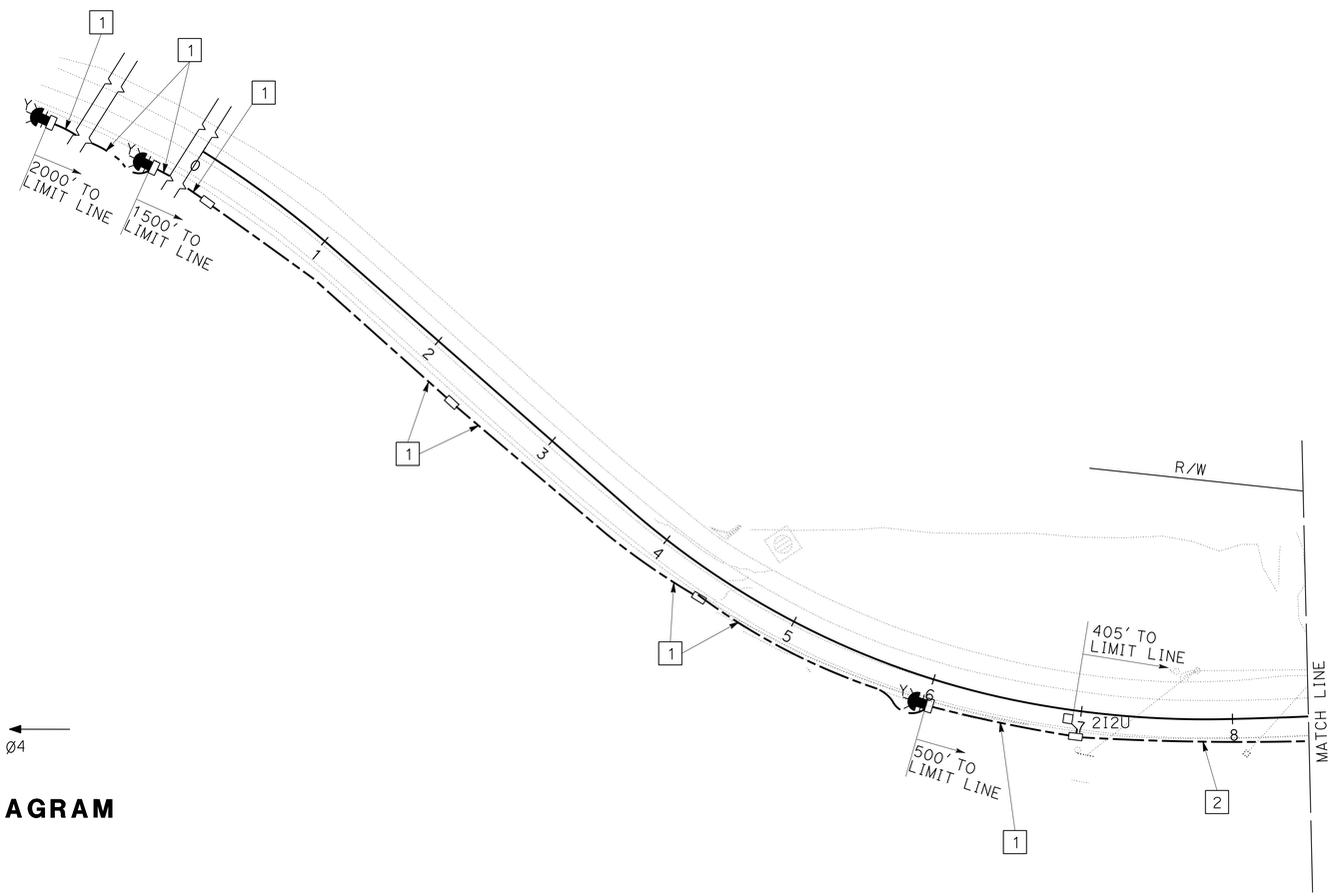

PHASE DIAGRAM

TEMPORARY SIGNAL SYSTEM

SCALE: 1" = 50'

E-1

APPROVED FOR ELECTRICAL WORK ONLY

REVISED BY | DATE REVISED
ARTURO ROBLES | TERI ANDERSON
CALCULATED-DESIGNED BY | CHECKED BY
FUNCTIONAL SUPERVISOR: ROB STINGER

STATE OF CALIFORNIA - DEPARTMENT OF TRANSPORTATION
Caltrans® **ELECTRICAL DESIGN**

P:\proj1\01\0a520_plans\pse\0100020425ua001.dgn

LAST REVISION 03-27-15 | DATE PLOTTED => 30-MAR-2015 | TIME PLOTTED => 08:29

BORDER LAST REVISED 7/2/2010 | USERNAME => s115152 | DGN FILE => 0100020425ua001.dgn | RELATIVE BORDER SCALE IS IN INCHES 0 1 2 3 | UNIT 0147 | PROJECT NUMBER & PHASE 0100020425-1 | EA 01-0A5201

Dist	COUNTY	ROUTE	POST MILES TOTAL PROJECT	SHEET No.	TOTAL SHEETS
01	Hum	299	R21.1/R21.5	43	76

ART 03-27-15
REGISTERED ELECTRICAL ENGINEER DATE

03-27-15
PLANS APPROVAL DATE

REGISTERED PROFESSIONAL ENGINEER A.P. ROBLES No. E15293 Exp. 3-31-15 ELECTRICAL STATE OF CALIFORNIA

THE STATE OF CALIFORNIA OR ITS OFFICERS OR AGENTS SHALL NOT BE RESPONSIBLE FOR THE ACCURACY OR COMPLETENESS OF SCANNED COPIES OF THIS PLAN SHEET.

NOTE:

FOR ACCURATE RIGHT OF WAY DATA, CONTACT RIGHT OF WAY ENGINEERING AT THE DISTRICT OFFICE.

LEGEND (THIS SHEET):

1. 1½"C, 2#12 (FB), 1#12 G, 1 DLC.
2. 1½"C, 2#12 (FB), 1#12 G, 2 DLC.
3. 2-3"C, 2#8, 1#8 G (Cab 2), 4 DLC (Cab 2), 4 DLC (Cab 1).
4. 1½"C, 2#8, 1#8 G (Cab 2), 5 DLC (Cab 2), 3 CSC (PPB), 2#12, 1#12 G (FB), 2#12 (BFB),
5. WOOD POLE WITH SIGNAL AND LIGHTING. SEE SHEET E-4. SEE SIGN PLANS AND PROVIDE BFB AND SI. FOR ADDITIONAL WOOD POLE DETAILS. SEE STAGE CONSTRUCTION AND TRAFFIC HANDLING PLANS.
6. SPAN MOUNTED SIGNAL FACE. SEE SHEET SC-5.
7. WOOD POLE, SEE STAGE CONSTRUCTION AND TRAFFIC HANDLING PLANS.
8. MESSENGER CABLE 6#12, 1#10 N 1#8 G.
9. 2"C, 2#8 (Cab 2), 2#8 (Ltg), 3#12, 1#10 N (SIGNALS), 3CSC (PPB), 2#12 (FB), 2#12 (BFB), 1#8 G.
10. MESSENGER CABLE, 2#8 (Ltg), 6#12, 1#10 N (SIGNALS), 2#12 (FB), 2#12 (BFB), 2#10 (SI), 3CSC (PPB), 4 DLC (Cab 1), 5 DLC (Cab 2), 1#8 G.
11. 1½"C, 2#12, 1#12 G, 4 DLC (Cab 1).
12. 1½"C, 3CSC (PPB).
13. 2½"C, 2#8 (Ltg), 6#12, 1#10 N (SIGNALS), 2#12 (FB), 2#12 (BFB), 2#10 (SI), 4 DLC (Cab 1), 5 DLC (Cab 2), 1#8 G.
14. 2"C, 2#6 (Cab 1), 2#8 (Cab 2), 2#10 (Ltg), 2#12 (FB), 1#6 G.
15. 2-3"C, 6#12, 1#10 N (SIGNALS), 3CSC (PPB), 4 DLC (Cab 1), 5 DLC (Cab 2).
16. 1½"C, 2#12, 1#12 G (FB), 2 DLC (Cab 1).
17. Cab1 WITH BATTERY BACKUP CABINET.

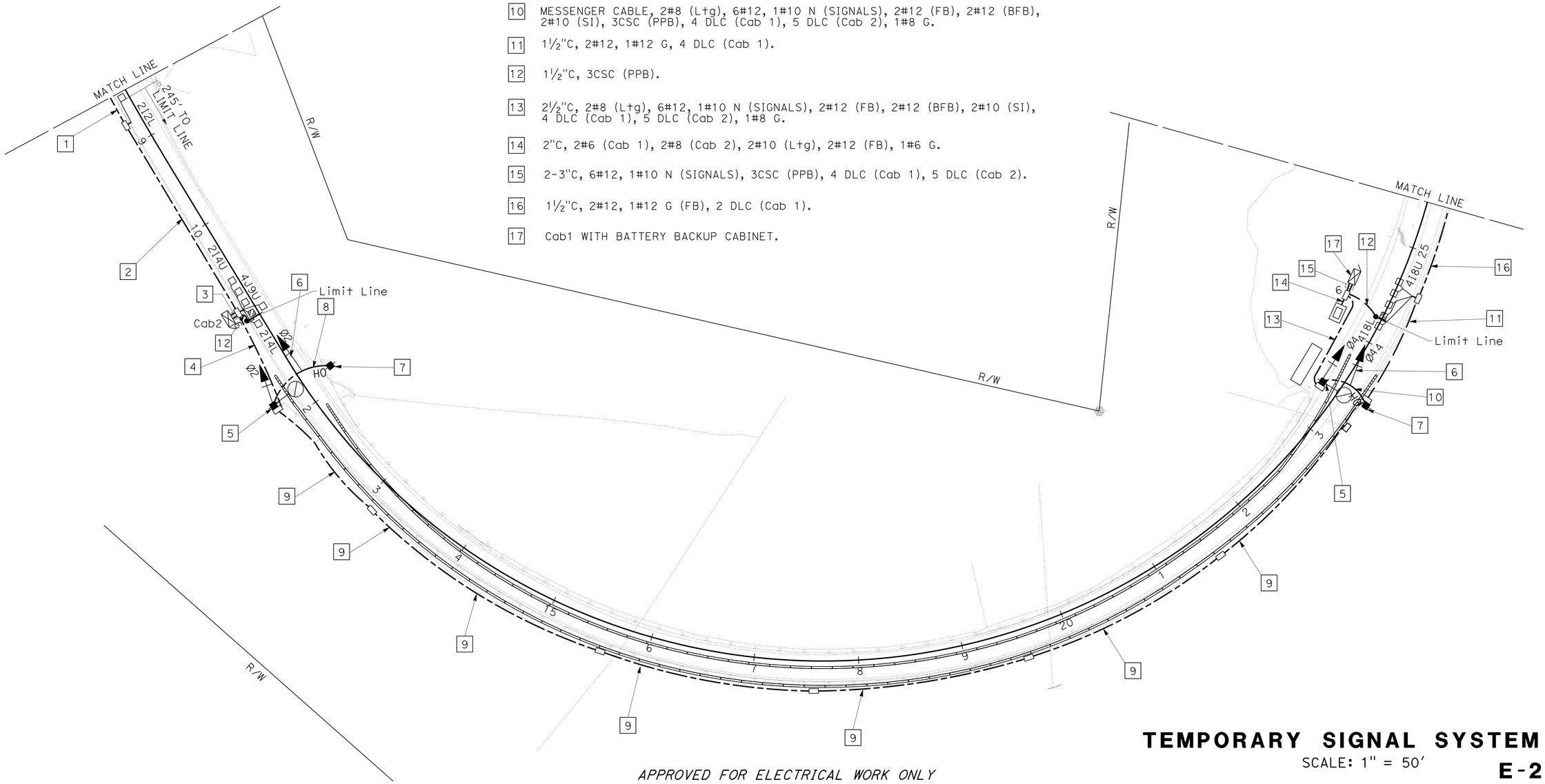

APPROVED FOR ELECTRICAL WORK ONLY

TEMPORARY SIGNAL SYSTEM

SCALE: 1" = 50'

E-2

REVISED BY	DATE REVISED

CALCULATED-DESIGNED BY: ARTURO ROBLES
CHECKED BY: TERI ANDERSON
FUNCTIONAL SUPERVISOR: ROB STINGER

STATE OF CALIFORNIA - DEPARTMENT OF TRANSPORTATION
Caltrans® ELECTRICAL DESIGN

P:\proj1\01\0a520_plans\pse\0100020425ua002.dgn

LAST REVISION DATE PLOTTED => 30-MAR-2015
03-27-15 TIME PLOTTED => 08:29

Dist	COUNTY	ROUTE	POST MILES TOTAL PROJECT	SHEET No.	TOTAL SHEETS
01	Hum	299	R21.1/R21.5	44	76

ART 03-27-15
REGISTERED ELECTRICAL ENGINEER DATE

03-27-15
PLANS APPROVAL DATE

REGISTERED PROFESSIONAL ENGINEER
A.P. ROBLES
No. E15293
Exp. 3-31-15
ELECTRICAL
STATE OF CALIFORNIA

THE STATE OF CALIFORNIA OR ITS OFFICERS OR AGENTS SHALL NOT BE RESPONSIBLE FOR THE ACCURACY OR COMPLETENESS OF SCANNED COPIES OF THIS PLAN SHEET.

NOTE:

FOR ACCURATE RIGHT OF WAY DATA, CONTACT RIGHT OF WAY ENGINEERING AT THE DISTRICT OFFICE.

LEGEND (THIS SHEET):

1. 1"C, 2#12, 1#12 G (FB).
2. 1½"C, 2#12, 1#12 G (FB).
3. 1½"C, 2#12, 1#12 G (FB), 1 DLC (Cab 1).
4. 1½"C, 2#12, 1#12 G (FB), 2 DLC (Cab1).

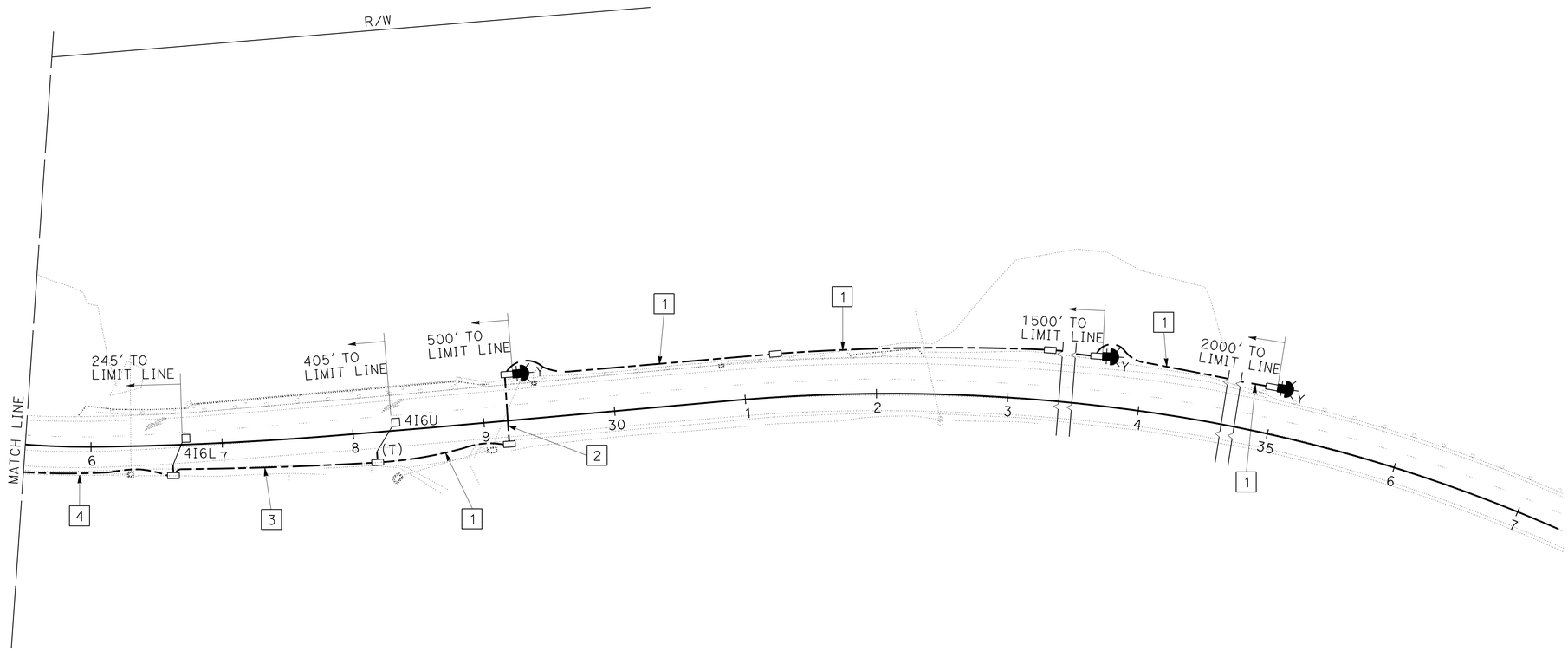

TEMPORARY SIGNAL SYSTEM

SCALE: 1" = 50'

E-3

APPROVED FOR ELECTRICAL WORK ONLY

REVISED BY	DATE REVISED

CALCULATED-DESIGNED BY	CHECKED BY
ARTURO ROBLES	TERI ANDERSON

FUNCTIONAL SUPERVISOR: ROB STINGER

STATE OF CALIFORNIA - DEPARTMENT OF TRANSPORTATION
Caltrans® ELECTRICAL DESIGN

P:\proj1\01\0a520_plans\pse\0100020425ua003.dgn

LAST REVISION 03-27-15 | DATE PLOTTED => 30-MAR-2015 | TIME PLOTTED => 08:29

Dist	COUNTY	ROUTE	POST MILES TOTAL PROJECT	SHEET No.	TOTAL SHEETS
01	Hum	299	R21.1/R21.5	45	76

ART 03-27-15
REGISTERED ELECTRICAL ENGINEER DATE

03-27-15
PLANS APPROVAL DATE

REGISTERED PROFESSIONAL ENGINEER A.P. ROBLES No. E15293 Exp. 3-31-15 ELECTRICAL STATE OF CALIFORNIA

THE STATE OF CALIFORNIA OR ITS OFFICERS OR AGENTS SHALL NOT BE RESPONSIBLE FOR THE ACCURACY OR COMPLETENESS OF SCANNED COPIES OF THIS PLAN SHEET.

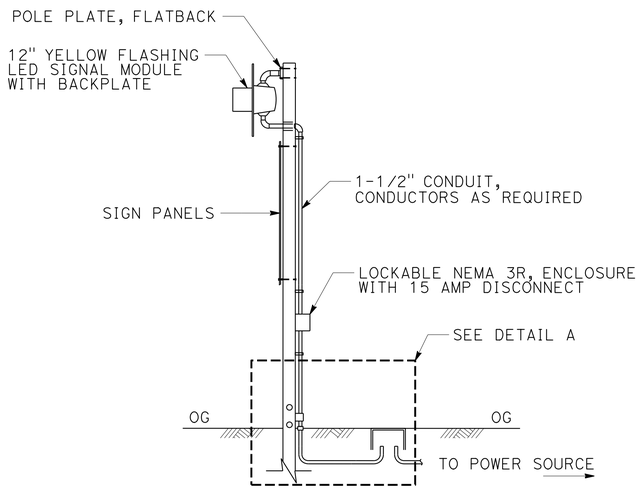

TEMPORARY FLASHING BEACON

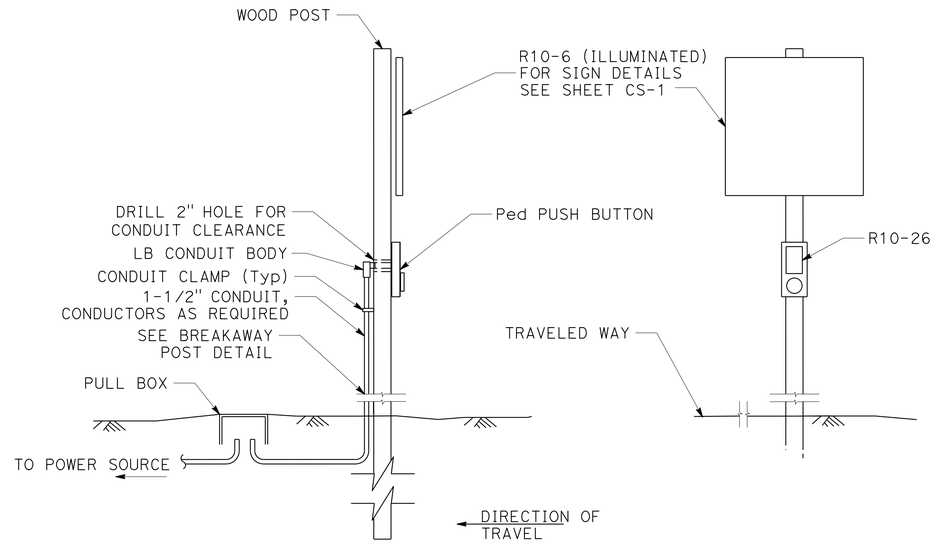

Ped PUSH BUTTON INSTALLATION

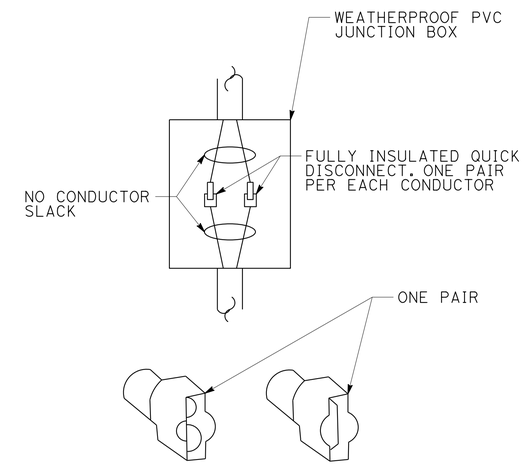

DETAIL B

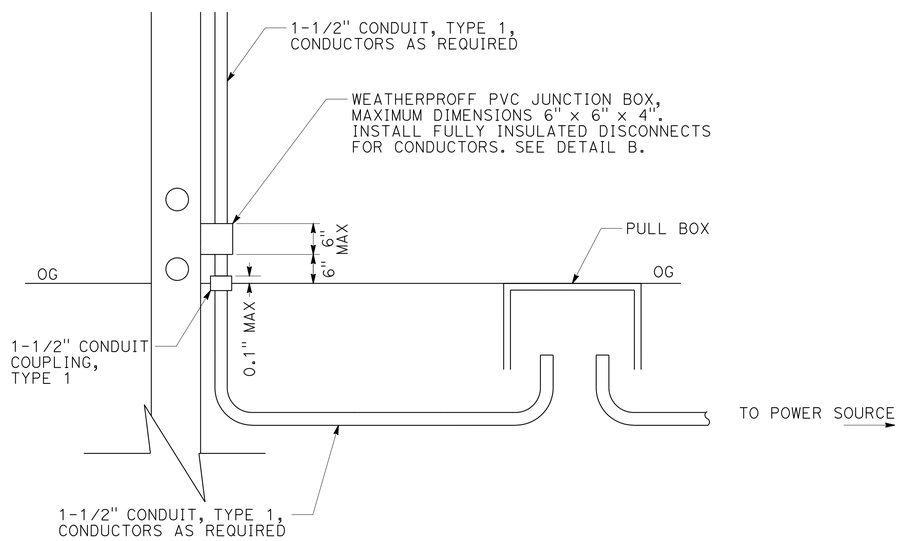

DETAIL A
BREAKAWAY POST
(CONDUIT CONNECTION)

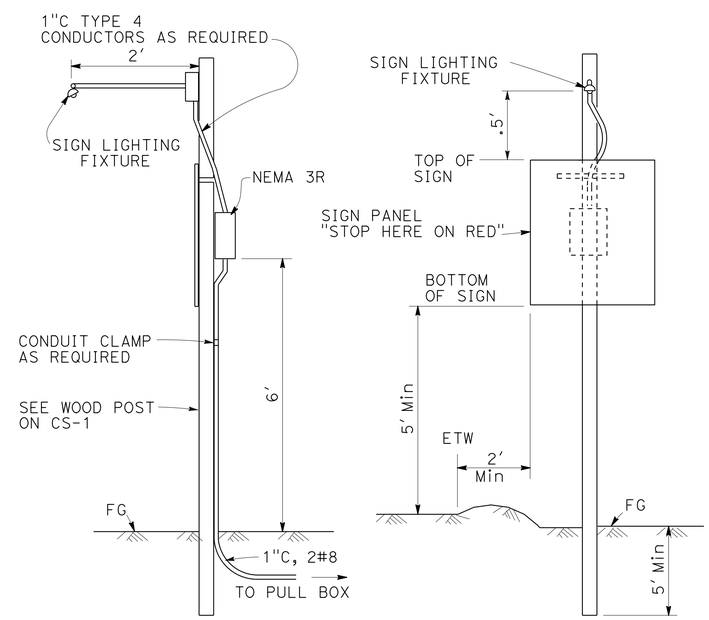

SIDE VIEW FRONT

TYPICAL SIGN ILLUMINATION

ELECTRICAL DETAILS

NO SCALE

E-4

STATE OF CALIFORNIA - DEPARTMENT OF TRANSPORTATION
Caltrans® ELECTRICAL DESIGN

FUNCTIONAL SUPERVISOR: ROB STINGER
CALCULATED-DESIGNED BY: ARTURO ROBLES
CHECKED BY: TERI ANDERSON
REVISED BY
DATE REVISED

P:\proj1\01\0as20_plans\pse\0100020425ua004.dgn

LAST REVISION 03-27-15
DATE PLOTTED => 30-MAR-2015
TIME PLOTTED => 08:29

Dist	COUNTY	ROUTE	POST MILES TOTAL PROJECT	SHEET No.	TOTAL SHEETS
01	Hum	299	R21.1/R21.5	46	76

ART 03-27-15
REGISTERED ELECTRICAL ENGINEER DATE

03-27-15
PLANS APPROVAL DATE

REGISTERED PROFESSIONAL ENGINEER A.P. ROBLES No. E15293 Exp. 3-31-15 ELECTRICAL STATE OF CALIFORNIA

THE STATE OF CALIFORNIA OR ITS OFFICERS OR AGENTS SHALL NOT BE RESPONSIBLE FOR THE ACCURACY OR COMPLETENESS OF SCANNED COPIES OF THIS PLAN SHEET.

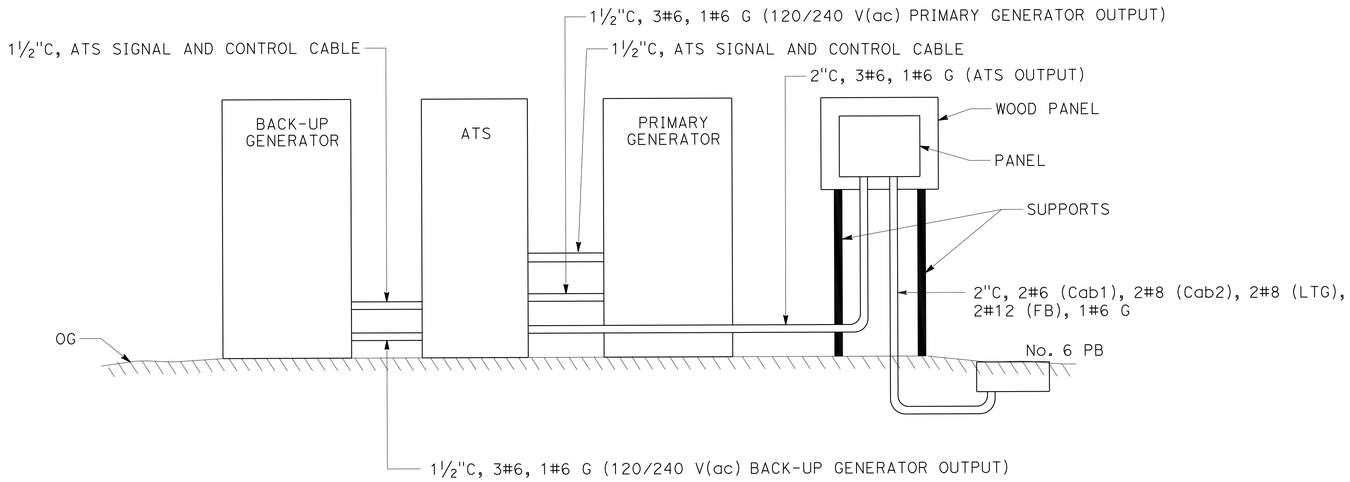

ATS AND GENERATORS

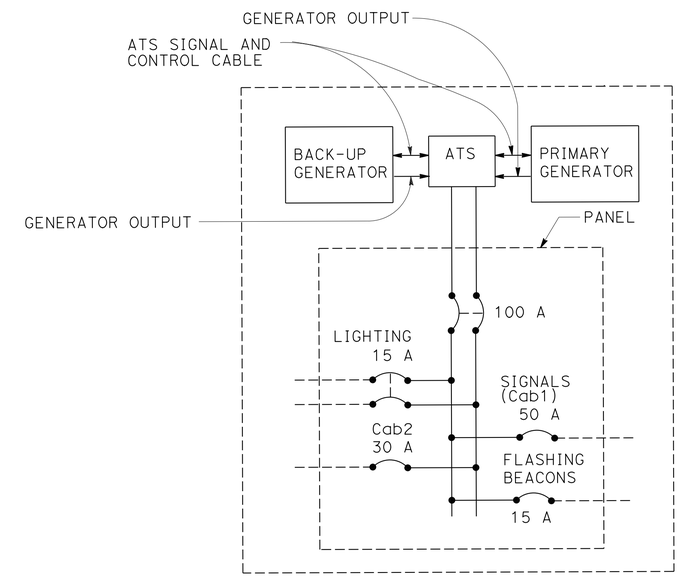

WIRING DIAGRAM

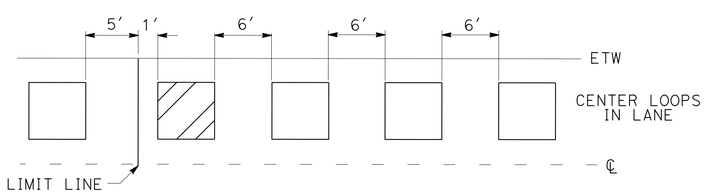

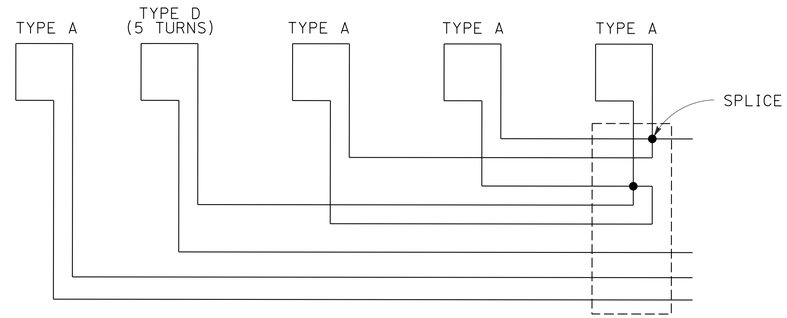

TYPE D/TYPE A LOOP ARRAY

ELECTRICAL DETAILS

NO SCALE

E-5

STATE OF CALIFORNIA - DEPARTMENT OF TRANSPORTATION
Caltrans ELECTRICAL DESIGN

FUNCTIONAL SUPERVISOR: ROB STINGER
CALCULATED-DESIGNED BY: ARTURO ROBLES
CHECKED BY: TERI ANDERSON
REVISED BY / DATE REVISED

P:\proj1\01\0a520_plans\pse\0100020425ua005.dgn

LAST REVISION 03-27-15 | DATE PLOTTED => 30-MAR-2015 | TIME PLOTTED => 08:29

Dist	COUNTY	ROUTE	POST MILES TOTAL PROJECT	SHEET No.	TOTAL SHEETS
01	Hum	299	R21.1/R21.5	47	76

ART 03-27-15
REGISTERED ELECTRICAL ENGINEER DATE

03-27-15
PLANS APPROVAL DATE

REGISTERED PROFESSIONAL ENGINEER A.P. ROBLES No. E15293 Exp. 3-31-15 ELECTRICAL STATE OF CALIFORNIA

THE STATE OF CALIFORNIA OR ITS OFFICERS OR AGENTS SHALL NOT BE RESPONSIBLE FOR THE ACCURACY OR COMPLETENESS OF SCANNED COPIES OF THIS PLAN SHEET.

TEMPORARY SIGNAL SYSTEM

SHEET No.	TRENCHING AND BACKFILL	BORING	1" TYPE 3 CONDUIT	1½" TYPE 3 CONDUIT	2" TYPE 3 CONDUIT	2½" TYPE 3 CONDUIT	3" TYPE 3 CONDUIT	MESSENGER CABLE	SIGNAL FACE WITH 3 INDICATIONS	No. 5 PULL BOX	No. 6 PULL BOX	No. 12 CONDUCTOR	No. 12 GROUND	No. 10 CONDUCTOR	No. 10 NEUTRAL	No. 8 CONDUCTOR	No. 8 GROUND	No. 6 CONDUCTOR	No. 6 GROUND	DLC	3CSC	TYPE A LOOP	TYPE D LOOP	MAST ARM AND LUMINAIRE	FLASHING BEACON	BICYCLE FLASHING BEACON	WOOD POST	WOOD POLE	GENERATOR
	LF	LF	LF	LF	LF	LF	LF	LF	EA	EA	EA	LF	LF	LF	LF	LF	LF	LF	LF	LF	LF	EA	EA	EA	EA	EA	EA	EA	EA
E-1	1900	-	1700	200	-	-	-	-	-	12	-	3600	1800	-	-	-	-	-	-	200	-	1	-	-	3	-	3	-	-
E-2	1750	50	-	650	1200	100	100	125	6	10	2	11100	700	350	1400	5000	1400	50	50	8800	1350	8	2	2	-	2	2	4	2
E-3	2000	50	1600	400	-	-	-	-	-	14	-	4000	2000	-	-	-	-	-	-	600	-	4	-	-	3	-	3	-	-

ITEMS SHOWN IN THIS TABLE ARE NOT SEPARATE PAY ITEMS, FOR INFORMATION ONLY

ELECTRICAL QUANTITIES

E-6

CALCULATED-DESIGNED BY	ARTURO ROBLES	REVISED BY	
CHECKED BY	TERI ANDERSON	DATE REVISED	
FUNCTIONAL SUPERVISOR	ROB STINGER		

STATE OF CALIFORNIA - DEPARTMENT OF TRANSPORTATION
Caltrans ELECTRICAL DESIGN

P:\proj1\01\0a520_plans\pse\0100020425ua006.dgn

LAST REVISION 03-27-15 | DATE PLOTTED => 30-MAR-2015 TIME PLOTTED => 08:29

M

Maint	MAINTENANCE
Max	MAXIMUM
MB	METAL BEAM
MBB	METAL BEAM BARRIER
MBGR	METAL BEAM GUARD RAILING
Med	MEDIAN
MGS	MIDWEST GUARDRAIL SYSTEM
MH	MANHOLE
Min	MINIMUM
Misc	MISCELLANEOUS
Misc I & S	MISCELLANEOUS IRON AND STEEL
Mkr	MARKER
Mod	MODIFIED, MODIFY
Mon	MONUMENT
MP	METAL PLATE
MPGR	METAL PLATE GUARD RAILING
MR	MOVEMENT RATING
MSE	MECHANICALLY STABILIZED EMBANKMENT
Mt	MOUNTAIN, MOUNT
Mtl	MATERIAL
MVP	MAINTENANCE VEHICLE PULLOUT

N

N	NORTH
NB	NORTHBOUND
No.	NUMBER (MUST HAVE PERIOD)
Nos.	NUMBERS (MUST HAVE PERIOD)
NPS	NOMINAL PIPE SIZE
NS	NEAR SIDE
NSP	NEW STANDARD PLAN
NTS	NOT TO SCALE

O

Oblr	OBLITERATE
OC	OVERCROSSING
OD	OUTSIDE DIAMETER
OF	OUTSIDE FACE
OG	ORIGINAL GROUND
OGAC	OPEN GRADED ASPHALT CONCRETE
OGFC	OPEN GRADED FRICTION COURSE
OH	OVERHEAD
OHWM	ORDINARY HIGH WATER MARK
O-O	OUT TO OUT
Opp	OPPOSITE
OSD	OVERSIDE DRAIN

P

P	PAGE
PAP	PERFORATED ALUMINUM PIPE
PB	PULL BOX
PC	POINT OF CURVATURE, PRECAST
PCC	POINT OF COMPOUND CURVE, PORTLAND CEMENT CONCRETE
PCMS	PORTABLE CHANGEABLE MESSAGE SIGN
PCP	PERFORATED CONCRETE PIPE, PRESTRESSED CONCRETE PIPE
PCVC	POINT OF COMPOUND VERTICAL CURVE
PEC	PERMIT TO ENTER AND CONSTRUCT
Ped	PEDESTRIAN
Ped OC	PEDESTRIAN OVERCROSSING
Ped UC	PEDESTRIAN UNDERCROSSING
Perm Mtl	PERMEABLE MATERIAL

P continued

PG	PROFILE GRADE
PI	POINT OF INTERSECTION
PJP	PARTIAL JOINT PENETRATION
Pkwy	PARKWAY
₱,PL	PLATE
P/L	PROPERTY LINE
PM	POST MILE, TIME FROM NOON TO MIDNIGHT
PN	PAVING NOTCH
POC	POINT OF HORIZONTAL CURVE
POT	POINT OF TANGENT
POVC	POINT OF VERTICAL CURVE
PP	PIPE PILE, PLASTIC PIPE, POWER POLE
PPL	PREFORMED PERMEABLE LINER
PPP	PERFORATED PLASTIC PIPE
PRC	POINT OF REVERSE CURVE
PRF	PAVEMENT REINFORCING FABRIC
PRVC	POINT OF REVERSE VERTICAL CURVE
PS&E	PLANS, SPECIFICATIONS AND ESTIMATES
PS, P/S	PRESTRESSED
PSP	PERFORATED STEEL PIPE
PT	POINT OF TANGENCY
PVC	POLYVINYL CHLORIDE
Pvmt	PAVEMENT

Q

Qty	QUANTITY

R

R	RADIUS
R & D	REMOVE AND DISPOSE
R & S	REMOVE AND SALVAGE
R/C	RATE OF CHANGE
RCA	REINFORCED CONCRETE ARCH
RCB	REINFORCED CONCRETE BOX
RCP	REINFORCED CONCRETE PIPE
RCPA	REINFORCED CONCRETE PIPE ARCH
Rd	ROAD
Reinf	REINFORCED, REINFORCEMENT, REINFORCING
Rel	RELOCATE
Repl	REPLACEMENT
Ret	RETAINING
Rev	REVISED, REVISION
Rdwy	ROADWAY
RHMA	RUBBERIZED HOT MIX ASPHALT
Riv	RIVER
RM	ROAD-MIXED
RP	RADIUS POINT, REFERENCE POINT
RR	RAILROAD
RSP	ROCK SLOPE PROTECTION, REVISED STANDARD PLAN
Rt	RIGHT
Rte	ROUTE
RW	REDWOOD, RETAINING WALL
R/W	RIGHT OF WAY
Rwy	RAILWAY

S

S	SOUTH, SUPPLEMENT
SAE	STRUCTURE APPROACH EMBANKMENT
Salv	SALVAGE
SAPP	STRUCTURAL ALUMINUM PLATE PIPE
SB	SOUTHBOUND
SC	SAND CUSHION
SCSP	SLOTTED CORRUGATED STEEL PIPE
SD	STORM DRAIN
Sec	SECOND, SECTION
Sep	SEPARATION
SG	SUBGRADE
Shld	SHOULDER
Sht	SHEET
Sim	SIMILAR
₤	STATION LINE
SM	SELECTED MATERIAL
Spec	SPECIAL, SPECIFICATIONS
SPP	SLOTTED PLASTIC PIPE
SS	SLOPE STAKE
SSBM	STRAP AND SADDLE BRACKET METHOD
SSD	STRUCTURAL SECTION DRAIN
SSPA	STRUCTURAL STEEL PLATE ARCH
SSPP	STRUCTURAL STEEL PLATE PIPE
SSPPA	STRUCTURAL STEEL PLATE PIPE ARCH
SSRP	STEEL SPIRAL RIB PIPE
St	STREET
Sta	STATION
STBB	SINGLE THRIE BEAM BARRIER
Std	STANDARD
Str	STRUCTURE
Surf	SURFACING
SW	SIDEWALK, SOUND WALL
Swr	SEWER
Sym	SYMMETRICAL
S4S	SURFACE 4 SIDES

T

T	SEMI-TANGENT
Tan	TANGENT
TBB	THRIE BEAM BARRIER
Tbr	TIMBER
TC	TOP OF CURB
TCB	TRAFFIC CONTROL BOX
TCE	TEMPORARY CONSTRUCTION EASEMENT
Tel	TELEPHONE
Temp	TEMPORARY
TG	TOP OF GRADE
Tot	TOTAL
TP	TELEPHONE POLE
TPB	TREATED PERMEABLE BASE
TPM	TREATED PERMEABLE MATERIAL
Trans	TRANSITION

T continued

TS	TRANSVERSE, TRAFFIC SIGNAL, TUBULAR STEEL
Typ	TYPICAL

U

UC	UNDERCROSSING
UD	UNDERDRAIN
UG	UNDERGROUND
UON	UNLESS OTHERWISE NOTED
UP	UNDERPASS

V

V	VALVE, DESIGN SPEED
Var	VARIABLE, VARIES
VC	VERTICAL CURVE
VCP	VITRIFIED CLAY PIPE
Vert	VERTICAL
Via	VIADUCT
Vol	VOLUME

W

W	WEST, WIDTH
WB	WESTBOUND
WH	WEEP HOLE
WM	WIRE MESH
WS	WATER SURFACE
WSP	WELDED STEEL PIPE
Wt	WEIGHT
WV	WATER VALVE
WW	WINGWALL
WWLOL	WINGWALL LAYOUT LINE

X

X Sec	CROSS SECTION
Xing	CROSSING

Y

Yr	YEAR
Yrs	YEARS

Dist	COUNTY	ROUTE	POST MILES TOTAL PROJECT	SHEET No.	TOTAL SHEETS
01	Hum	299	R21.1/R21.5	48	76

Grace M. Tsushima
REGISTERED CIVIL ENGINEER

July 19, 2013
PLANS APPROVAL DATE

REGISTERED PROFESSIONAL ENGINEER Grace M. Tsushima No. C49814 Exp. 9-30-14 CIVIL STATE OF CALIFORNIA

THE STATE OF CALIFORNIA OR ITS OFFICERS OR AGENTS SHALL NOT BE RESPONSIBLE FOR THE ACCURACY OR COMPLETENESS OF SCANNED COPIES OF THIS PLAN SHEET.

TO ACCOMPANY PLANS DATED 03-27-15

UNIT OF MEASUREMENT SYMBOLS:

Some of the symbols used in the project plan quantity tables and in the Bid Item List are:

TABLE A

SYMBOL USED	DEFINITIONS
ACRE	ACRE
CF	CUBIC FOOT
CY	CUBIC YARD
EA	EACH
GAL	GALLON
LB	POUND
LF	LINEAR FOOT
SQFT	SQUARE FOOT
SQYD	SQUARE YARD
STA	100 FEET
TAB	TABLET
TON	2,000 POUNDS

Some of the symbols used in the plans other than in the project plan quantity tables are:

TABLE B

SYMBOL USED	DEFINITIONS
ksi	KIPS PER SQUARE INCH
ksf	KIPS PER SQUARE FOOT
psi	POUNDS PER SQUARE INCH
psf	POUNDS PER SQUARE FOOT
lb/ft^3, pcf	POUNDS PER CUBIC FOOT
tsf	TONS PER SQUARE FOOT
mph, MPH *	MILES PER HOUR
ø	NOMINAL DIAMETER
oz	OUNCE
lb	POUND
kip	1,000 POUNDS
cal	CALORIE
ft	FOOT OR FEET
gal	GALLON

* For use on a sign panel only

STATE OF CALIFORNIA
DEPARTMENT OF TRANSPORTATION

ABBREVIATIONS (SHEET 2 OF 2)

NO SCALE

RSP A10B DATED JULY 19, 2013 SUPERSEDES STANDARD PLAN A10B DATED MAY 20, 2011 - PAGE 2 OF THE STANDARD PLANS BOOK DATED 2010.

REVISED STANDARD PLAN RSP A10B

2010 REVISED STANDARD PLAN RSP A10B

DATE PLOTTED => 30-MAR-2015
TIME PLOTTED => 08:29

Dist	COUNTY	ROUTE	POST MILES TOTAL PROJECT	SHEET No.	TOTAL SHEETS
01	Hum	299	R21.1/R21.5	49	76

REGISTERED CIVIL ENGINEER

April 20, 2012
PLANS APPROVAL DATE

REGISTERED PROFESSIONAL ENGINEER
Roberta L. McLaughlin
No. C40375
Exp. 3-31-13
CIVIL
STATE OF CALIFORNIA

THE STATE OF CALIFORNIA OR ITS OFFICERS OR AGENTS SHALL NOT BE RESPONSIBLE FOR THE ACCURACY OR COMPLETENESS OF SCANNED COPIES OF THIS PLAN SHEET.

TO ACCOMPANY PLANS DATED 03-27-15

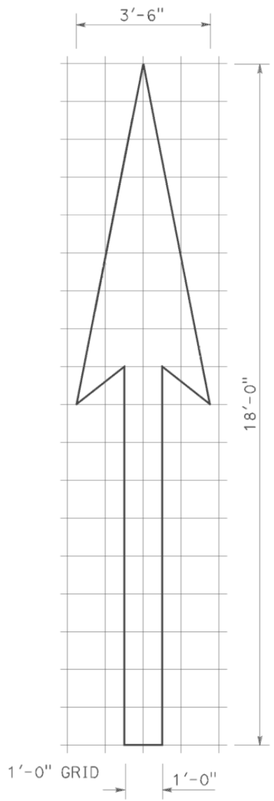

A=25 ft^2

TYPE I 18'-0" ARROW

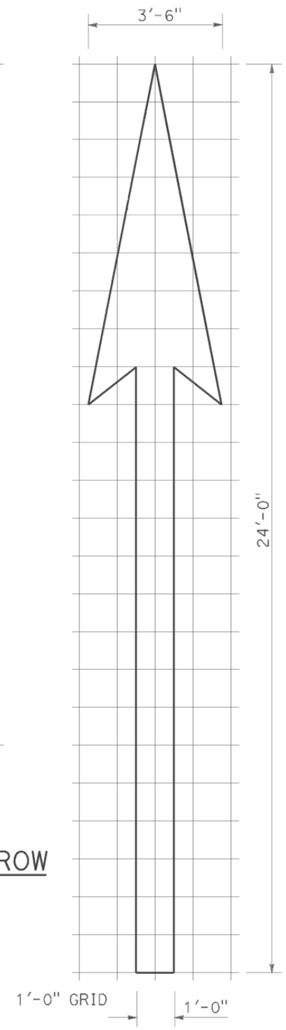

A=31 ft^2

TYPE I 24'-0" ARROW

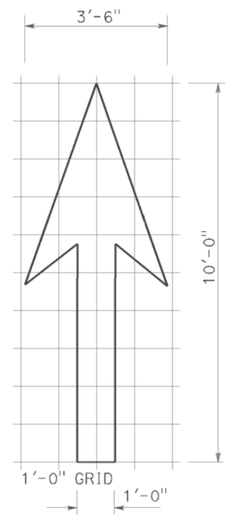

A=14 ft^2

TYPE I 10'-0" ARROW

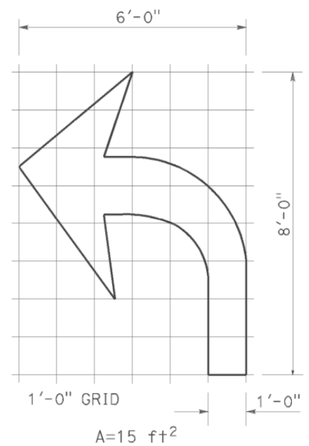

A=15 ft^2

TYPE IV (L) ARROW

(For Type IV (R) arrow, use mirror image)

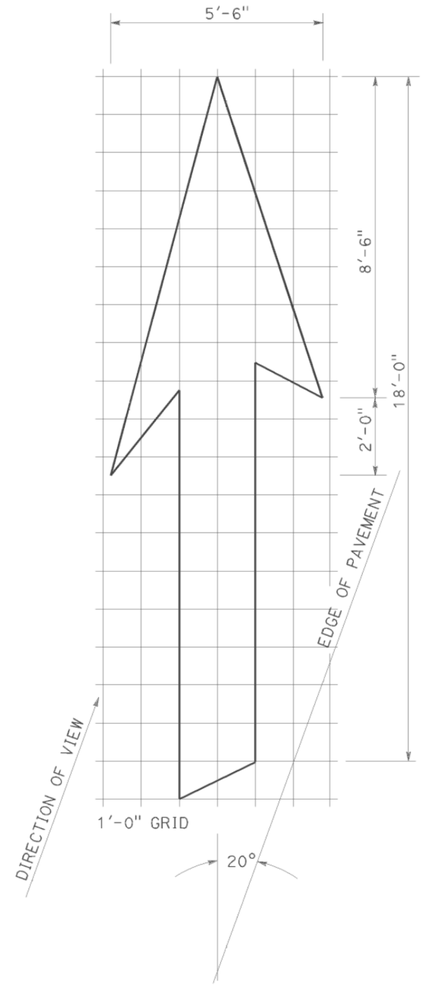

A=42 ft^2

TYPE VI ARROW

Right lane drop arrow (For left lane, use mirror image)

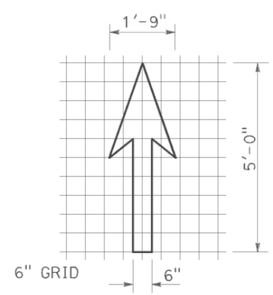

A=3.5 ft^2

BIKE LANE ARROW

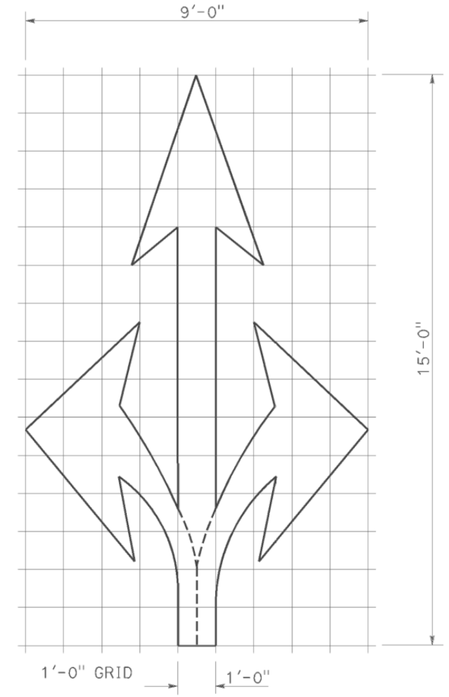

A=36 ft^2

TYPE VIII ARROW

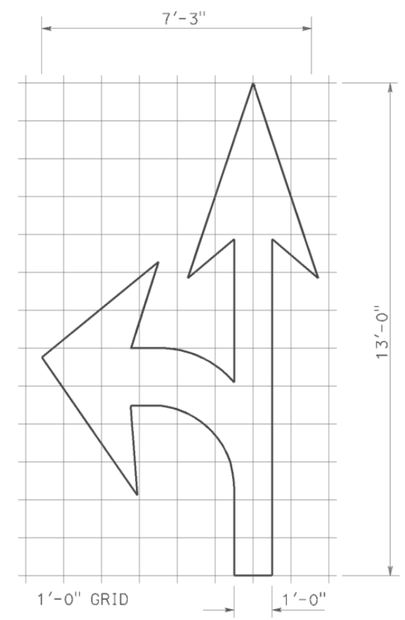

A=27 ft^2

TYPE VII (L) ARROW

(For Type VII (R) arrow, use mirror image)

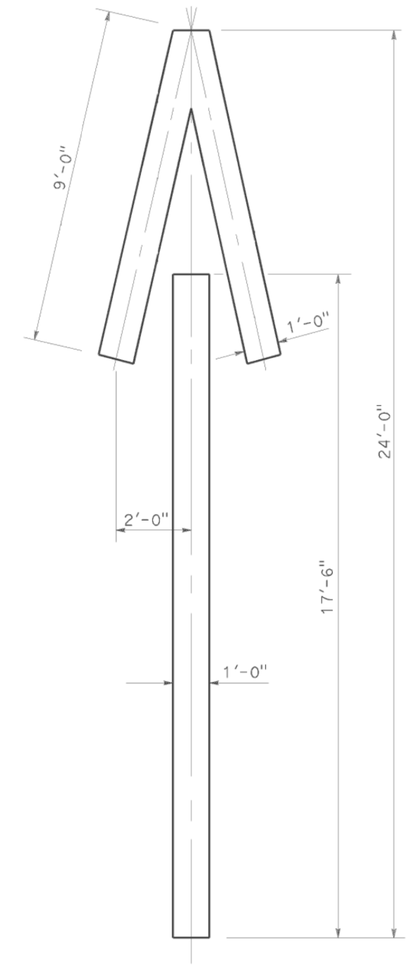

A=33 ft^2

TYPE V ARROW

NOTE:
Minor variations in dimensions may be accepted by the Engineer.

STATE OF CALIFORNIA
DEPARTMENT OF TRANSPORTATION

PAVEMENT MARKINGS ARROWS

NO SCALE

RSP A24A DATED APRIL 20, 2012 SUPERSEDES STANDARD PLAN A24A DATED MAY 20, 2011 - PAGE 13 OF THE STANDARD PLANS BOOK DATED 2010.

REVISED STANDARD PLAN RSP A24A

2010 REVISED STANDARD PLAN RSP A24A

DATE PLOTTED => 30-MAR-2015
TIME PLOTTED => 08:29

Dist	COUNTY	ROUTE	POST MILES TOTAL PROJECT	SHEET No.	TOTAL SHEETS
01	Hum	299	R21.1/R21.5	50	76

REGISTERED CIVIL ENGINEER

July 18, 2014
PLANS APPROVAL DATE

REGISTERED PROFESSIONAL ENGINEER
Carl M. Duan
No. C59976
Exp. 6-30-16
CIVIL
STATE OF CALIFORNIA

THE STATE OF CALIFORNIA OR ITS OFFICERS OR AGENTS SHALL NOT BE RESPONSIBLE FOR THE ACCURACY OR COMPLETENESS OF SCANNED COPIES OF THIS PLAN SHEET.

TO ACCOMPANY PLANS DATED 03-27-15

2010 REVISED STANDARD PLAN RSP A62DA

DESIGN NOTES:

Design: AASHTO LRFD Bridge Design Specifications, 4th edition with California Amendments. ACPA DESIGN DATA 1, October 2007. INDIRECT DESIGN METHOD

Soil: w Fe = 162 pcf Installation Type 1
w Fe = 168 pcf Installation Types 2 & 3
w = Unit weight of soil (pcf)
Fe = Soil-structure interaction factor

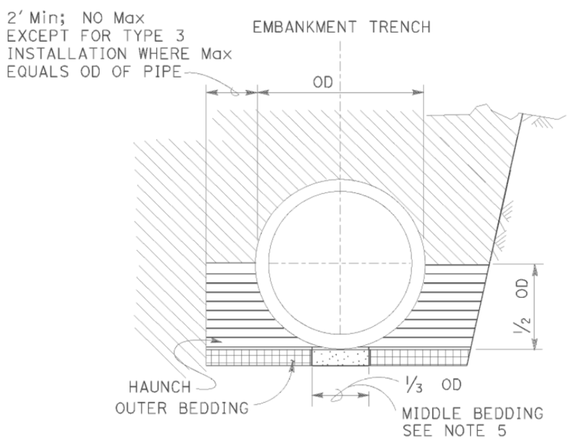

BACKFILL

LEGEND:

- ROADWAY EMBANKMENT
- STRUCTURE BACKFILL (CULVERT) FOR HAUNCH SEE NOTE 6
- STRUCTURE BACKFILL (CULVERT) FOR OUTER BEDDING SEE NOTE 6
- LOOSE BACKFILL
- STRUCTURE EXCAVATION (CULVERT)

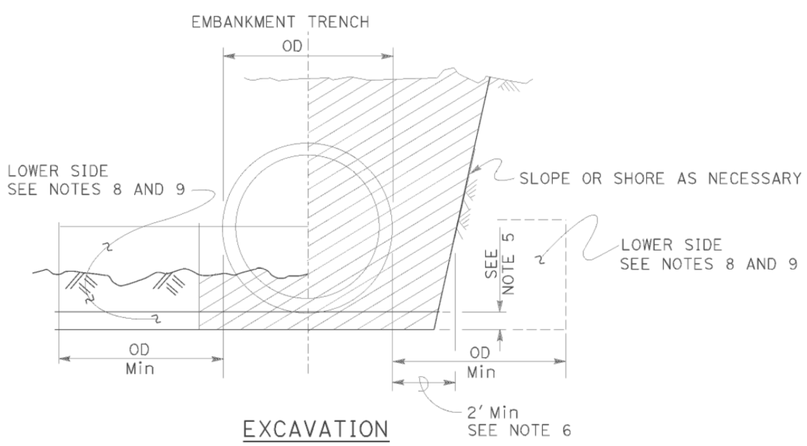

EXCAVATION

INSTALLATION TYPE 1:

The haunch and outer bedding shall be compacted to a minimum 90 percent relative compaction. In addition, the minimum sand equivalent in these areas shall be 30 and the maximum percentage passing the No. 200 sieve size shall be 12.

INSTALLATION TYPE 2:

The haunch and outer bedding shall be compacted to a minimum 90 percent relative compaction. In addition, the minimum sand equivalent in these areas shall be 25.

INSTALLATION TYPE 3:

The haunch and outer bedding shall be compacted to a minimum 85 percent relative compaction. 90 percent relative compaction will be required where the fill over the pipe is less than 4′-0″ or ½ OD. In addition, the minimum sand equivalent in these areas shall be 25 and the material shall not contain rocks, broken concrete, or other solid material exceeding 3″ in greatest dimension.

INSTALLATION TYPE 1

MINIMUM CLASS AND D-LOAD	COVER	
	60″ Dia AND SMALLER	OVER 60″ Dia TO 120″ Dia Max
CLASS II 1000D	14.9′	12.9′
CLASS III 1350D	15.0′ - 21.9′	13.0′ - 18.9′
CLASS III SPECIAL 1700D	22.0′ - 27.9′	19.0′ - 24.9′
CLASS IV 2000D	28.0′ - 32.9′	25.0′ - 29.9′
CLASS IV SPECIAL 2500D	33.0′ - 41.9′	30.0′ - 38.9′
CLASS V 3000D	42.0′ - 49.9′	39.0′ - 46.9′
CLASS V SPECIAL 3600D	50.0′ - 60.0′	47.0′ - 58.0′

INSTALLATION TYPE 2

MINIMUM CLASS AND D-LOAD	COVER	
	60″ Dia AND SMALLER	OVER 60″ Dia TO 120″ Dia Max
CLASS II 1000D	11.9′	9.9′
CLASS III 1350D	12.0′ - 15.9′	10.0′ - 14.9′
CLASS III SPECIAL 1700D	16.0′ - 20.9′	15.0′ - 19.9′
CLASS IV 2000D	21.0′ - 24.9′	20.0′ - 23.9′
CLASS IV SPECIAL 2500D	25.0′ - 31.9′	24.0′ - 30.9′
CLASS V 3000D	32.0′ - 37.9′	31.0′ - 37.9′
CLASS V SPECIAL 3600D	38.0′ - 46.0′	38.0′ - 46.0′

INSTALLATION TYPE 3

MINIMUM CLASS AND D-LOAD	COVER	
	60″ Dia AND SMALLER	OVER 60″ Dia TO 120″ Dia Max
CLASS II 1000D	8.9′	5.9′
CLASS III 1350D	9.0′ - 11.9′	6.0′ - 10.9′
CLASS III SPECIAL 1700D	12.0′ - 15.9′	11.0′ - 13.9′
CLASS IV 2000D	16.0′ - 18.9′	14.0′ - 17.9′
CLASS IV SPECIAL 2500D	19.0′ - 24.9′	18.0′ - 22.9′
CLASS V 3000D	25.0′ - 29.9′	23.0′ - 28.9′
CLASS V SPECIAL 3600D	30.0′ - 36.0′	29.0′ - 35.0′

NOTES:

1. Unless otherwise shown on the plans or specified in the special provision, the Contractor shall have the option of selecting the class of RCP and the type of installation to be used, provided the height of cover does not exceed the value shown for the RCP selected.
   Example: 24″ RCP culvert with maximum cover of 24′-0″ the options are:
   a) Class III Special or stronger with Installation Type 1.
   b) Class IV or stronger with Installation Type 2.
   c) Class IV Special or stronger with Installation Type 3.
   Cover is defined as the maximum vertical distance from top of the pipe to finished grade within the length of any given culvert.
2. The class of RCP and Installation Type selected shall be the same throughout the length of any given culvert.
3. The "length of any culvert" is defined as the culvert between:
   a) Successive drainage structure (inlets, junction boxes, headwalls, etc.).
   b) A drainage structure and the inlet or outlet end of the culvert.
   c) The inlet and outlet end of the culvert when there are no intervening drainage structures.
4. Oval and arch shaped RCP shall not be used.
5. Bedding depth: 1/25 OD Min, not less than 3″.
6. Slurry cement backfill may be substituted for backfill in the outer bedding and haunch areas. If slurry is used, the outer and middle beddings shall be omitted. Prior to installation, the soil under the middle ⅓ of the outside diameter of the pipe shall be softened by scarifying or other means to a minimum depth of 1/25 OD, but not less than 3″. Where slurry cement backfill is used, clear distance to trench wall may be reduced as set forth in the Standard Specifications.
7. Backfill shall be placed full width of excavation except where dimensions are shown for backfill width or thickness. Dimensions shown are minimum.
8. Lower side shall be suitable material as determined by the Engineer. Otherwise it shall be considered unsuitable as set forth in of the Standard Specifications. See Note 9.
9. Where the pipe is placed in a trench, if the trench walls are sloped at 5 vertical to 1 horizontal or steeper for at least 90 percent of the trench height or up to not less than 12″ from the grading plane, the firmness of the soil in the lower side need not be considered.
10. Non-reinforced precast concrete pipe sizes 3′-0″ or smaller may be placed under installation Types 1, 2 or 3.

STATE OF CALIFORNIA
DEPARTMENT OF TRANSPORTATION

EXCAVATION AND BACKFILL CONCRETE PIPE CULVERTS INDIRECT DESIGN METHOD

NO SCALE

RSP A62DA DATED JULY 18, 2014 SUPERSEDES STANDARD PLAN A62DA DATED MAY 20, 2011 - PAGE 24 OF THE STANDARD PLANS BOOK DATED 2010.

REVISED STANDARD PLAN RSP A62DA

DATE PLOTTED => 30-MAR-2015
TIME PLOTTED => 08:29

Dist	COUNTY	ROUTE	POST MILES TOTAL PROJECT	SHEET No.	TOTAL SHEETS
01	Hum	299	R21.1/R21.5	51	76

Randell D. Hiatt
REGISTERED CIVIL ENGINEER

July 19, 2013
PLANS APPROVAL DATE

REGISTERED PROFESSIONAL ENGINEER
Randell D. Hiatt
No. C50200
Exp. 6-30-15
CIVIL
STATE OF CALIFORNIA

THE STATE OF CALIFORNIA OR ITS OFFICERS OR AGENTS SHALL NOT BE RESPONSIBLE FOR THE ACCURACY OR COMPLETENESS OF SCANNED COPIES OF THIS PLAN SHEET.

TO ACCOMPANY PLANS DATED 03-27-15

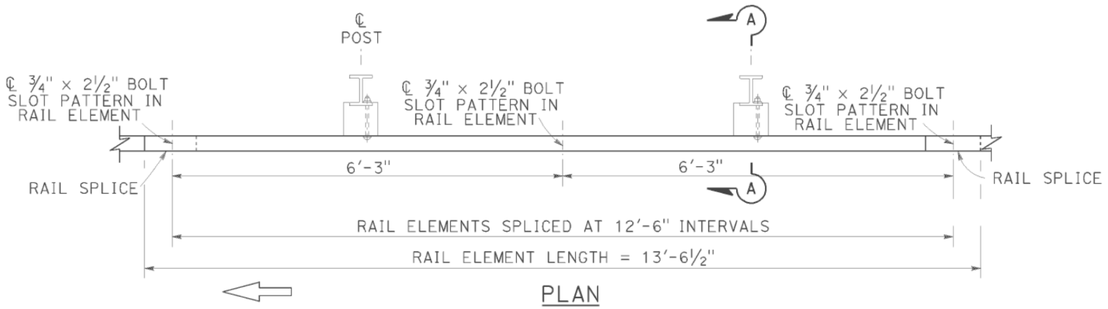

PLAN

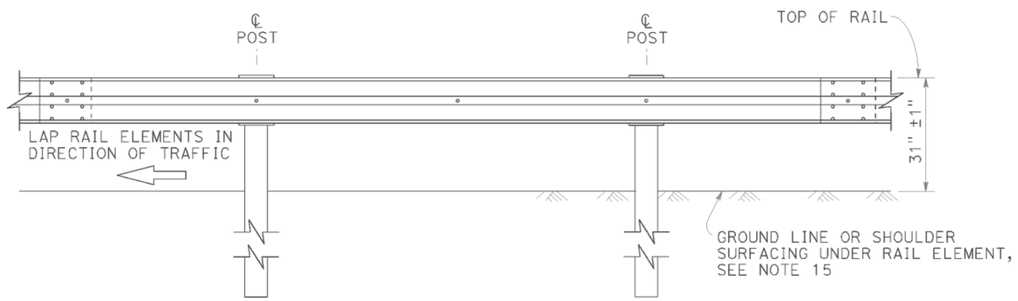

ELEVATION

MIDWEST GUARDRAIL SYSTEM WITH STEEL POSTS AND NOTCHED WOOD OR NOTCHED RECYCLED PLASTIC BLOCKS

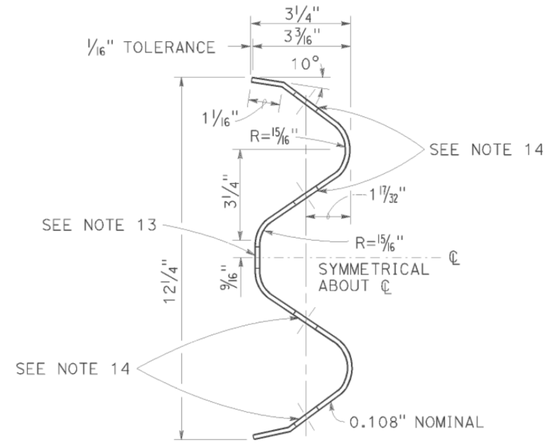

SECTION THRU RAIL ELEMENT

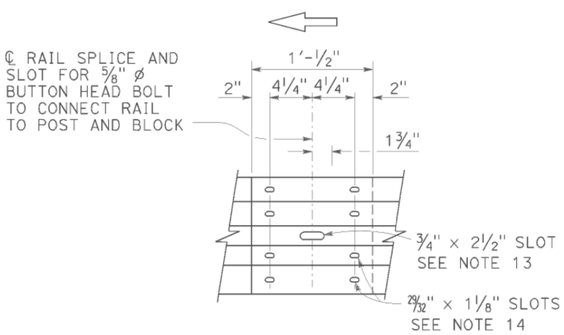

ELEVATION

RAIL ELEMENT SPLICE DETAIL

a) Connect the over lapped end of the rail elements with ⅝" ø × 1⅜" button head oval shoulder splice bolts inserted into the 29/32" × 1⅛" slots and bolted together with ⅝" ø recessed hex nuts. Recess of hex nut points toward rail element. A total of 8 bolts and nuts are to be used at each rail splice connection.

b) The ends of the rail elements are to be overlapped in the direction of traffic (see details).

c) Where end cap is to be attached to the end of a rail element, a total of 4 of the above described splice bolts and nuts are to be used.

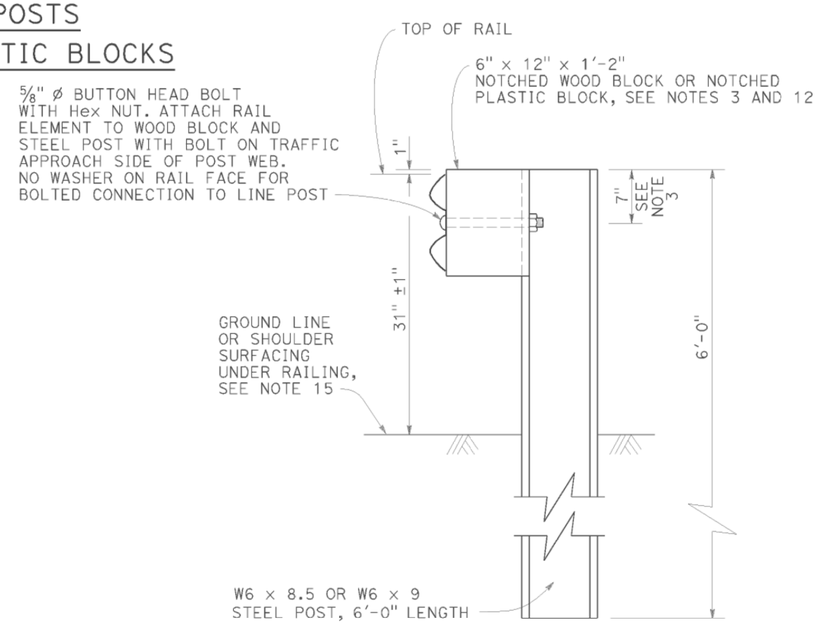

SECTION A-A

TYPICAL STEEL LINE POST INSTALLATION

See Note 4

NOTES:

1. For details of wood post installations, see Revised Standard Plan RSP A77L1.
2. For details of standard hardware used to construct MGS, see Revised Standard Plan RSP A77M1.
3. For details of steel posts and notched wood blocks used to construct MGS, see Revised Standard Plan RSP A77N2.
4. For additional installation details, see Revised Standard Plan RSP A77N3.
5. MGS post spacing to be 6'-3" center to center, except as otherwise noted.
6. For MGS typical layouts, see the A77P, A77Q and A77R Series of Standard Plans.
7. If railing is connected to terminal system end treatment, use 31" height terminal system end treatment.
8. For MGS end anchor details, see Revised Standard Plans RSP A77S1 and RSP A77T2.
9. For details of MGS transition to bridge railing, see Revised Standard Plan RSP A77U4.
10. For additional details of MGS connection to bridge railings, see Revised Standard Plans RSP A77U1, RSP A77U2 and RSP A77V1.
11. For dike positioning and MGS delineation details, see Revised Standard Plan RSP A77N4.
12. Notched face of block faces steel post.
13. Slotted hole for bolted connection of rail element to block and post. See "Section Thru Rail Element".
14. Slotted holes for splice bolts to overlap ends of rail element. See "Section Thru Rail Element".
15. Install posts in soil.

STATE OF CALIFORNIA
DEPARTMENT OF TRANSPORTATION

MIDWEST GUARDRAIL SYSTEM STANDARD RAILING SECTION (STEEL POST WITH NOTCHED WOOD OR NOTCHED RECYCLED PLASTIC BLOCK)

NO SCALE

RSP A77L2 DATED JULY 19, 2013 SUPPLEMENTS THE STANDARD PLANS BOOK DATED 2010.

REVISED STANDARD PLAN RSP A77L2

2010 REVISED STANDARD PLAN RSP A77L2

DATE PLOTTED => 30-MAR-2015
TIME PLOTTED => 08:29

Dist	COUNTY	ROUTE	POST MILES TOTAL PROJECT	SHEET No.	TOTAL SHEETS
01	Hum	299	R21.1/R21.5	52	76

Randell D. Hiatt
REGISTERED CIVIL ENGINEER

July 19, 2013
PLANS APPROVAL DATE

REGISTERED PROFESSIONAL ENGINEER
Randell D. Hiatt
No. C50200
Exp. 6-30-15
CIVIL
STATE OF CALIFORNIA

THE STATE OF CALIFORNIA OR ITS OFFICERS OR AGENTS SHALL NOT BE RESPONSIBLE FOR THE ACCURACY OR COMPLETENESS OF SCANNED COPIES OF THIS PLAN SHEET.

TO ACCOMPANY PLANS DATED 03-27-15

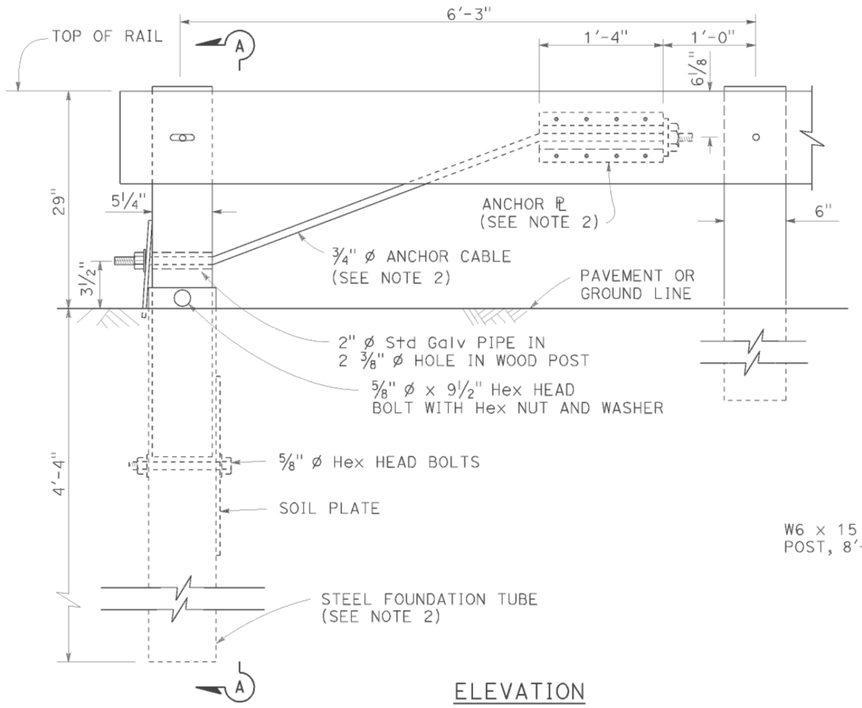

ELEVATION
END ANCHOR
ASSEMBLY (TYPE SFT)

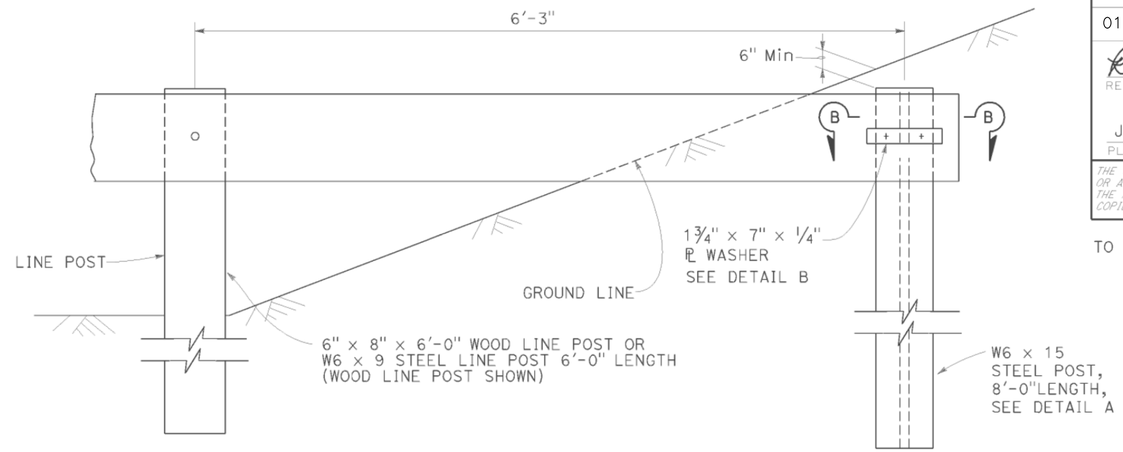

BURIED POST END ANCHOR

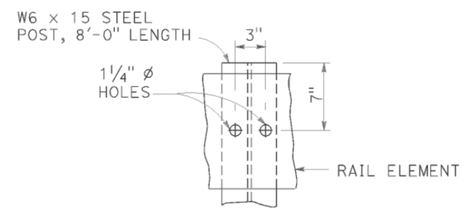

DETAIL A

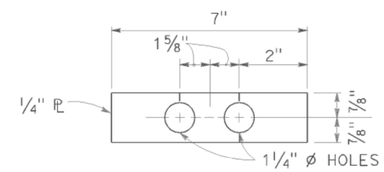

DETAIL B

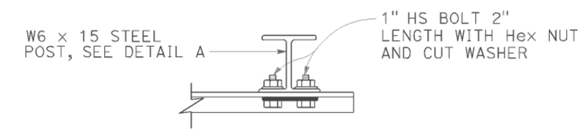

SECTION B-B

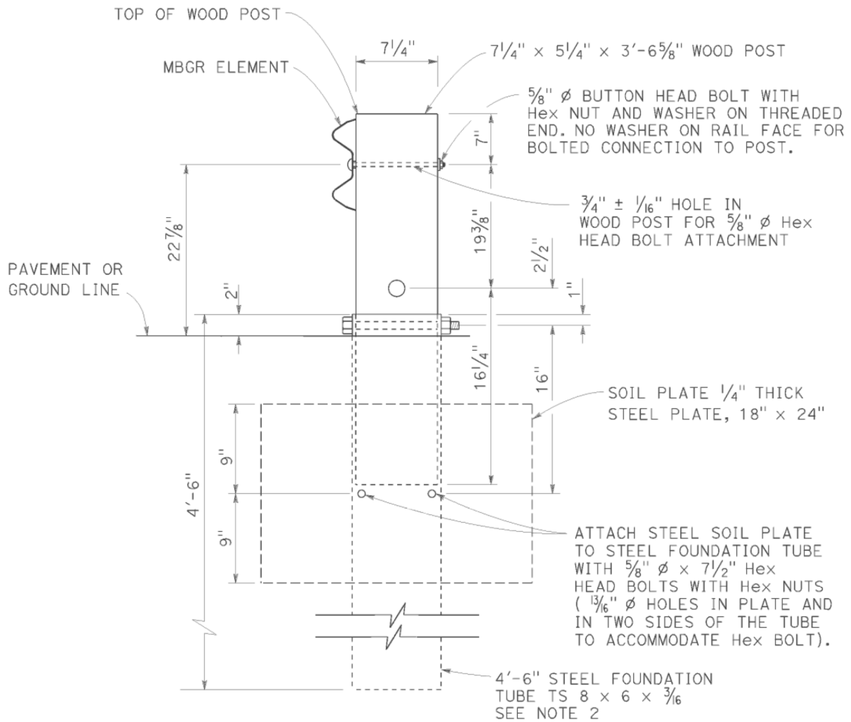

SECTION A-A

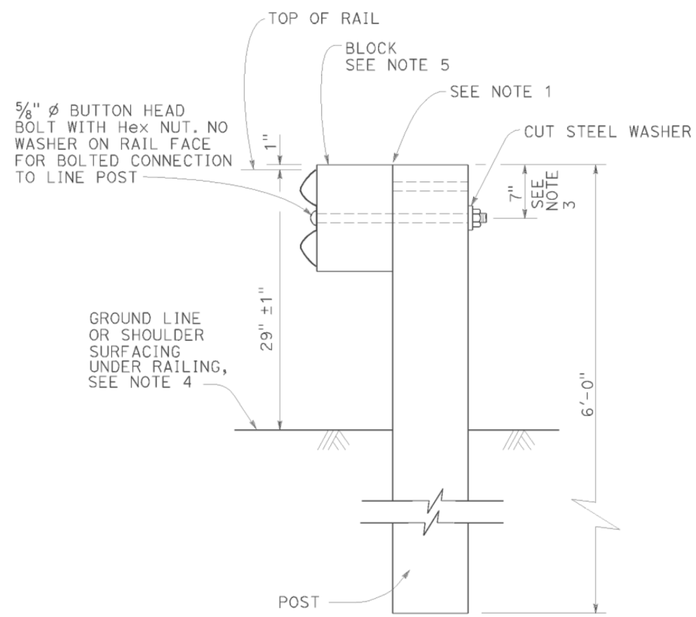

TYPICAL LINE
POST INSTALLATION

NOTES:

1. For wood post and wood block, toenail with 2-16d Galv nails in top of block. For steel post and notched wood or plastic block, notched face of block faces steel post.
2. A 6'-0" Length steel foundation tube, TS 8 x 6 x 3/16, without a soil plate, may be furnished and installed in place of the 4'-6" length steel foundation tube and soil plate shown, Minimum embadment of the 6'-0" length tube shall be 5'-9". A 5/8" ø Hex head bolt and nut shall be installed in the hole in the 6'-0" length tube to keep the wood post from dropping into the tube.
3. To connect railing to 27" terminal system end treatment, transition the top of railing height at a ratio of 120:1 to terminal system end treatment height plus one 12'-6" standard railing section at the transitioned height for a horizontal connection to the end treatment.
4. Install posts in soil.
5. See Revised Standard Plans RSP A77N1 and RSP A77N2 for details.
6. Holes excavation in the slope to construct the buried post end anchor shall be backfilled with selected earth, placed in layers approximately 1'-0" thick. Each layer shall be moistened and thoroughly compacted.

STATE OF CALIFORNIA
DEPARTMENT OF TRANSPORTATION

METAL BEAM GUARD RAILING RECONSTRUCT INSTALLATION

NO SCALE

RSP A77L3 DATED JULY 19, 2013 SUPPLEMENTS THE STANDARD PLANS BOOK DATED 2010.

REVISED STANDARD PLAN RSP A77L3

2010 REVISED STANDARD PLAN RSP A77L3

DATE PLOTTED => 30-MAR-2015
TIME PLOTTED => 08:29

Dist	COUNTY	ROUTE	POST MILES TOTAL PROJECT	SHEET No.	TOTAL SHEETS
01	Hum	299	R21.1/R21.5	53	76

Randell D. Hiatt
REGISTERED CIVIL ENGINEER

July 19, 2013
PLANS APPROVAL DATE

REGISTERED PROFESSIONAL ENGINEER
Randell D. Hiatt
No. C50200
Exp. 6-30-15
CIVIL
STATE OF CALIFORNIA

THE STATE OF CALIFORNIA OR ITS OFFICERS OR AGENTS SHALL NOT BE RESPONSIBLE FOR THE ACCURACY OR COMPLETENESS OF SCANNED COPIES OF THIS PLAN SHEET.

TO ACCOMPANY PLANS DATED 03-27-15

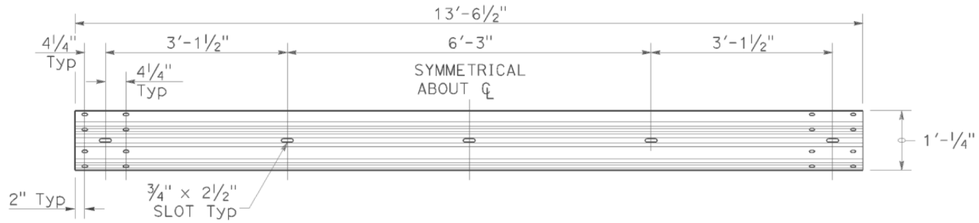

TYPICAL RAIL ELEMENT

NOTE:

1. Slotted holes for splice bolts to overlap ends of rail element.

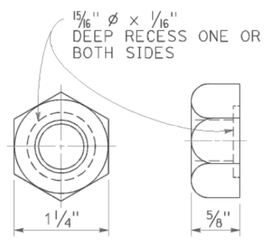

⅝" ø RECESS NUT

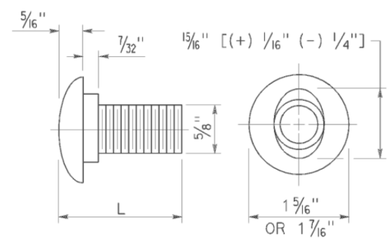

⅝" ø BUTTON HEAD BOLT

BUTTON HEAD BOLT

L	THREAD LENGTH
1⅜"	FULL THREAD LENGTH
2"	FULL THREAD LENGTH
10"	4" Min THREAD LENGTH
18"	4" Min THREAD LENGTH
20"	4" Min THREAD LENGTH
22"	4" Min THREAD LENGTH
26"	4" Min THREAD LENGTH
36"	4" Min THREAD LENGTH
** 2¾"	2" Min THREAD LENGTH
** 19"	4" Min THREAD LENGTH

** For nested rail applications.

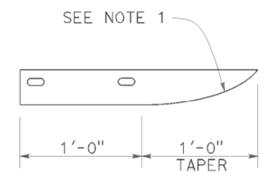

PLAN

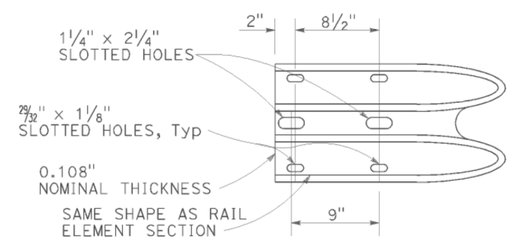

ELEVATION

END CAP
(TYPE A)

STATE OF CALIFORNIA
DEPARTMENT OF TRANSPORTATION

MIDWEST GUARDRAIL SYSTEM STANDARD HARDWARE

NO SCALE

RSP A77M1 DATED JULY 19, 2013 SUPPLEMENTS THE STANDARD PLANS BOOK DATED 2010.

REVISED STANDARD PLAN RSP A77M1

2010 REVISED STANDARD PLAN RSP A77M1

DATE PLOTTED => 30-MAR-2015
TIME PLOTTED => 08:29

Dist	COUNTY	ROUTE	POST MILES TOTAL PROJECT	SHEET No.	TOTAL SHEETS
01	Hum	299	R21.1/R21.5	54	76

Randell D. Hiatt
REGISTERED CIVIL ENGINEER

November 15, 2013
PLANS APPROVAL DATE

REGISTERED PROFESSIONAL ENGINEER
Randell D. Hiatt
No. C50200
Exp. 6-30-15
CIVIL
STATE OF CALIFORNIA

THE STATE OF CALIFORNIA OR ITS OFFICERS OR AGENTS SHALL NOT BE RESPONSIBLE FOR THE ACCURACY OR COMPLETENESS OF SCANNED COPIES OF THIS PLAN SHEET.

TO ACCOMPANY PLANS DATED 03-27-15

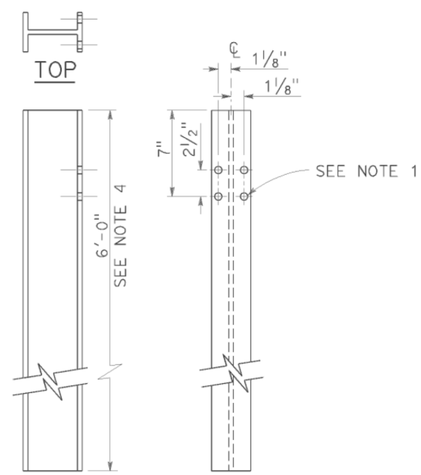

W6 x 9 OR W6 x 8.5
STEEL POST
See Note 4

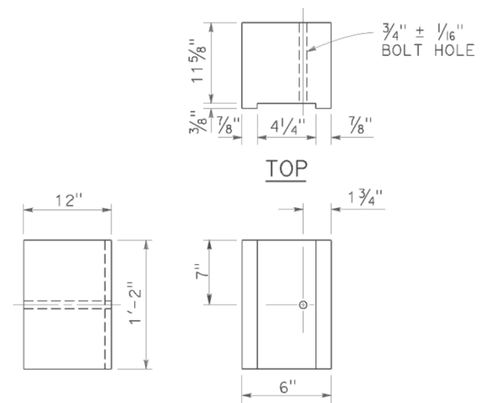

6" x 12"
NOTCHED WOOD BLOCK
See Notes 2 and 3

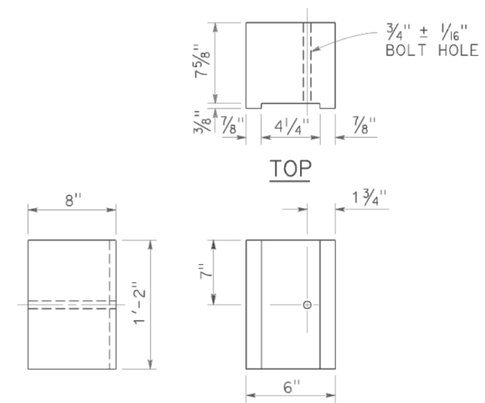

6" x 8"
NOTCHED WOOD BLOCK
Only for use with metal beam guard railing. See Note 5

NOTES:

1. All holes in steel post shall be 13/16" Dia maximum.
2. Dimensions shown for wood block are nominal.
3. Notched face of block faces steel post.
4. 6'-0" length posts to be used for typical roadway installation. See Revised Standard Plan RSP A77N3.
5. See Revised Standard Plan RSP A77L3 for use of 6" x 8" and 8" x 8" notched wood blocks.
6. This post and 8" x 12" block combination to be used for line post sections of MGS on narrow roadways and where strengthened line post sections of MGS are warranted to shield fixed objects.

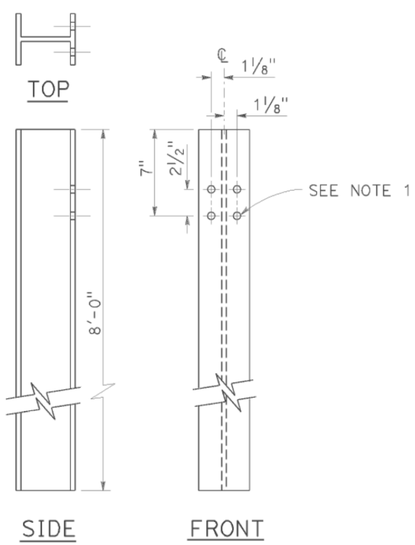

W6 x 15
STEEL POST
See Note 6

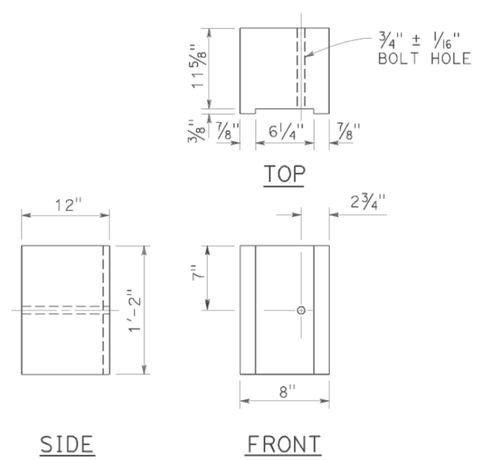

8" x 12"
NOTCHED WOOD BLOCK
See Notes 2 and 3

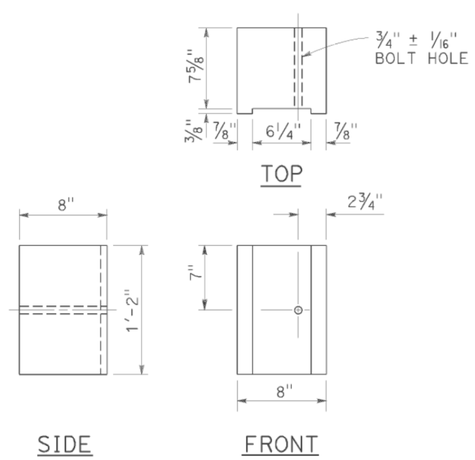

8" x 8"
NOTCHED WOOD BLOCK
Only for use with metal beam guard railing. See Note 5

STATE OF CALIFORNIA
DEPARTMENT OF TRANSPORTATION

MIDWEST GUARDRAIL SYSTEM STEEL POST AND NOTCHED WOOD BLOCK DETAILS

NO SCALE

RSP A77N2 DATED NOVEMBER 15, 2013 SUPERSEDES RSP A77N2
DATED JULY 19, 2013 THAT SUPPLEMENTS THE STANDARD PLANS BOOK DATED 2010.

REVISED STANDARD PLAN RSP A77N2

2010 REVISED STANDARD PLAN RSP A77N2

DATE PLOTTED => 30-MAR-2015
TIME PLOTTED => 08:29

Dist	COUNTY	ROUTE	POST MILES TOTAL PROJECT	SHEET No.	TOTAL SHEETS
01	Hum	299	R21.1/R21.5	55	76

Randell D. Hiatt
REGISTERED CIVIL ENGINEER

November 15, 2013
PLANS APPROVAL DATE

REGISTERED PROFESSIONAL ENGINEER
Randell D. Hiatt
No. C50200
Exp. 6-30-15
CIVIL
STATE OF CALIFORNIA

THE STATE OF CALIFORNIA OR ITS OFFICERS OR AGENTS SHALL NOT BE RESPONSIBLE FOR THE ACCURACY OR COMPLETENESS OF SCANNED COPIES OF THIS PLAN SHEET.

TO ACCOMPANY PLANS DATED 03-27-15

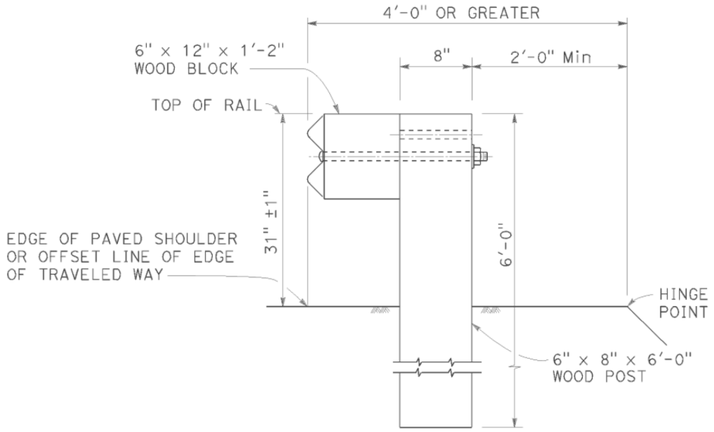

DETAIL A
TYPICAL ROADWAY INSTALLATION
See Note 1

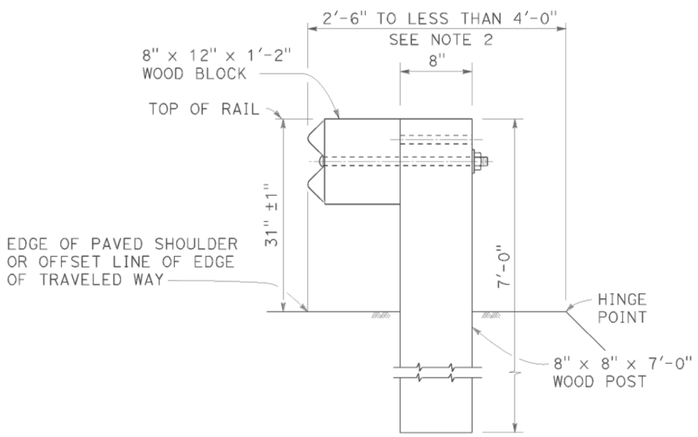

DETAIL B
NARROW ROADWAY INSTALLATION
See Note 1

POST EMBEDMENT

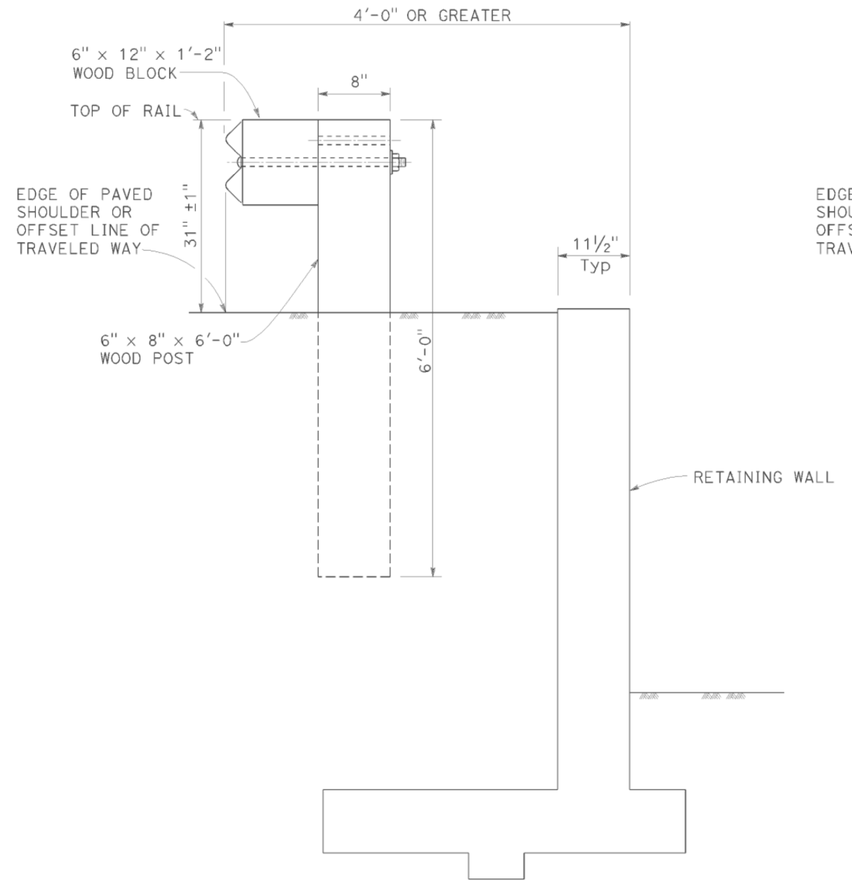

DETAIL C

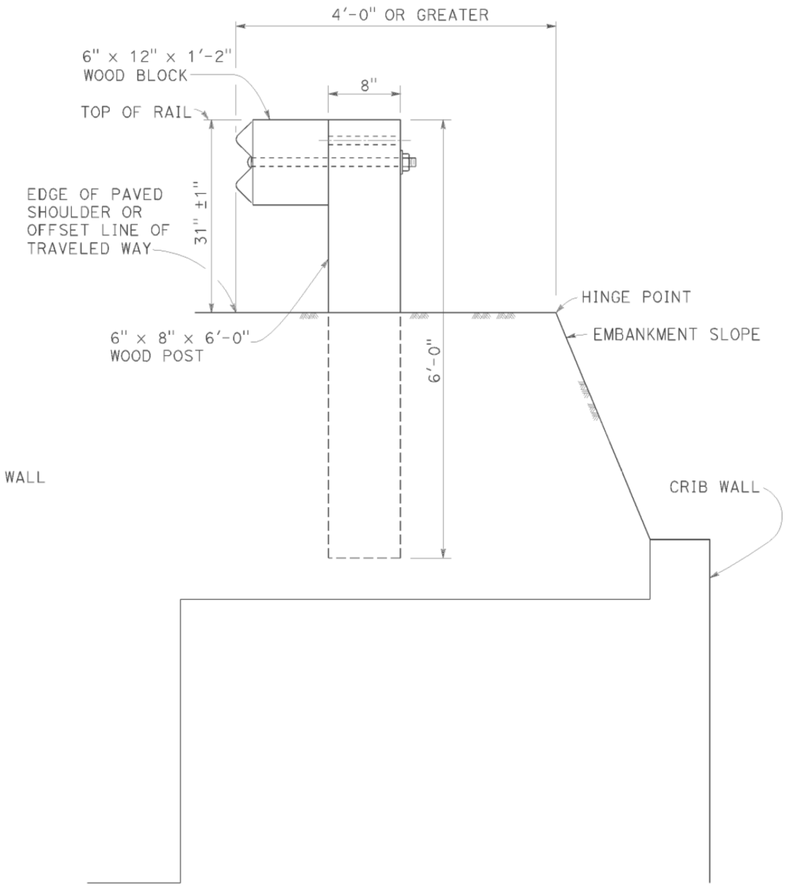

DETAIL D

INSTALLATION AT EARTH RETAINING WALLS

NOTES:

1. These installation details also applicable to steel line post installations. For Detail A, C, and D, where steel line post installations are constructed, W6 x 8.5 or W6 x 9 steel post, 6'-0" in length, with 6" x 12" x 1'-2" notched wood blocks or notched recycled plastic blocks are to be used in place of the size of wood post and wood block shown. For Detail B, where steel line post installations are constructed, W6 x 15 steel post, 8'-0" in length, with 8" x 12" x 1'-2" notched wood blocks or notched recycled plastic blocks are to be used in place of the size of wood post and wood block shown. For additional installation details, see Revised Standard Plan RSP A77L1 and RSP A77L2.
2. Where the distance between the face of the rail and the hinge point is less than 2'-6", see the Project Plans for special details.
3. For dike positioning with MGS installations, see Revised Standard Plan RSP A77N4.

STATE OF CALIFORNIA
DEPARTMENT OF TRANSPORTATION

MIDWEST GUARDRAIL SYSTEM TYPICAL LINE POST EMBEDMENT AND HINGE POINT OFFSET DETAILS

NO SCALE

RSP A77N3 DATED NOVEMBER 15, 2013 SUPERSEDES RSP A77N3 DATED JULY 19, 2013 THAT SUPPLEMENTS THE STANDARD PLANS BOOK DATED 2010.

REVISED STANDARD PLAN RSP A77N3

2010 REVISED STANDARD PLAN RSP A77N3

DATE PLOTTED => 30-MAR-2015
TIME PLOTTED => 08:30

Dist	COUNTY	ROUTE	POST MILES TOTAL PROJECT	SHEET No.	TOTAL SHEETS
01	Hum	299	R21.1/R21.5	56	76

Randell D. Hiatt
REGISTERED CIVIL ENGINEER

July 19, 2013
PLANS APPROVAL DATE

REGISTERED PROFESSIONAL ENGINEER
Randell D. Hiatt
No. C50200
Exp. 6-30-15
CIVIL
STATE OF CALIFORNIA

THE STATE OF CALIFORNIA OR ITS OFFICERS OR AGENTS SHALL NOT BE RESPONSIBLE FOR THE ACCURACY OR COMPLETENESS OF SCANNED COPIES OF THIS PLAN SHEET.

TO ACCOMPANY PLANS DATED 03-27-15

NOTES:

1. When necessary to place dike more than 7" in front of face of MGS, only Type C dike may be used. For dike details, see Revised Standard Plan RSP A87B.
2. For standard railing post embedment, see Revised Standard Plan RSP A77N3.
3. MGS delineation to be used where shown on the Project Plans.
4. When dike or curb is placed under MGS, the maximum height of the dike or curb shall be 6". Mountable dike should not be used. For dike and curb details, see Revised Standard Plans RSP A87A and RSP A87B.
5. For details of typical distance between the face of rail and hinge point, see Revised Standard Plan RSP A77N3.
6. For steel line posts, use 1/4 - 20 self-tapping screws in 0.22" diameter holes or 1/4" bolts in 9/32" diameter holes.

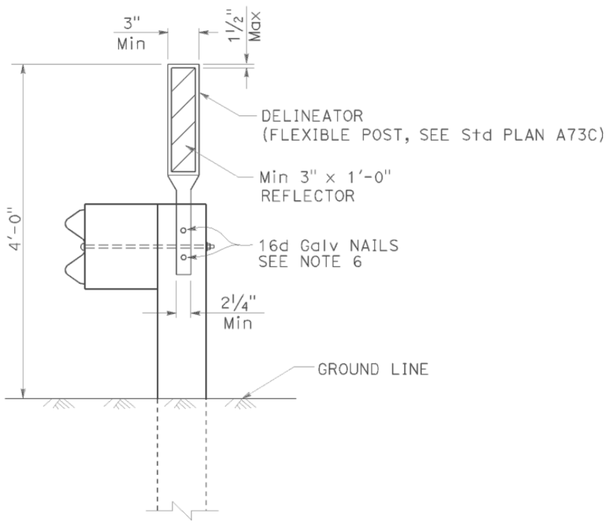

MGS DELINEATION
See Note 3

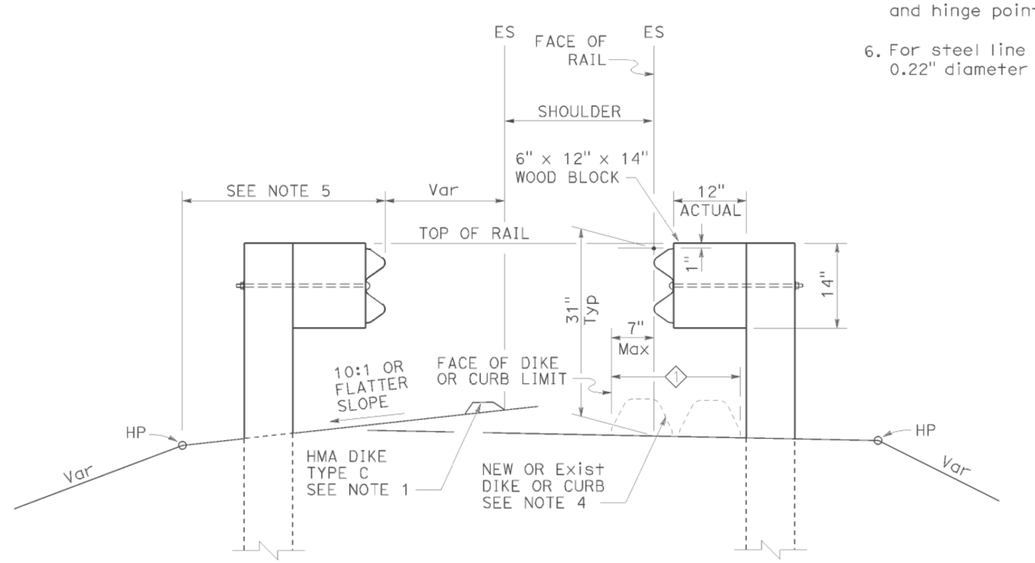

DIKE POSITIONING
See Note 1

1 PERMISSIBLE DIKE OR CURB PLACEMENT AREA

STATE OF CALIFORNIA
DEPARTMENT OF TRANSPORTATION

MIDWEST GUARDRAIL SYSTEM TYPICAL RAILING DELINEATION AND DIKE POSITIONING DETAILS

NO SCALE

RSP A77N4 DATED JULY 19, 2013 SUPPLEMENTS THE STANDARD PLANS BOOK DATED 2010.

REVISED STANDARD PLAN RSP A77N4

2010 REVISED STANDARD PLAN RSP A77N4

DATE PLOTTED => 30-MAR-2015
TIME PLOTTED => 08:30

Dist	COUNTY	ROUTE	POST MILES TOTAL PROJECT	SHEET No.	TOTAL SHEETS
01	Hum	299	R21.1/R21.5	57	76

Randell D. Hiatt
REGISTERED CIVIL ENGINEER

July 19, 2013
PLANS APPROVAL DATE

REGISTERED PROFESSIONAL ENGINEER
Randell D. Hiatt
No. C50200
Exp. 6-30-15
CIVIL
STATE OF CALIFORNIA

THE STATE OF CALIFORNIA OR ITS OFFICERS OR AGENTS SHALL NOT BE RESPONSIBLE FOR THE ACCURACY OR COMPLETENESS OF SCANNED COPIES OF THIS PLAN SHEET.

TO ACCOMPANY PLANS DATED 03-27-15

2010 REVISED STANDARD PLAN RSP A77P2

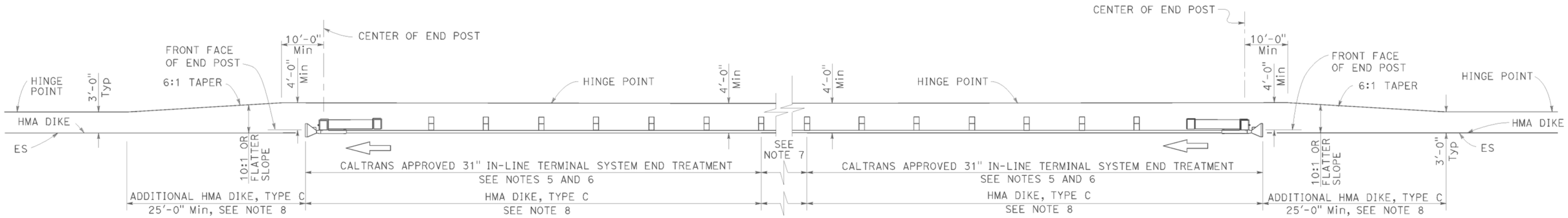

TYPE 11D LAYOUT

(Embankment MGS installation with
31" in-line end treatment at each end of railing)
See Note 4

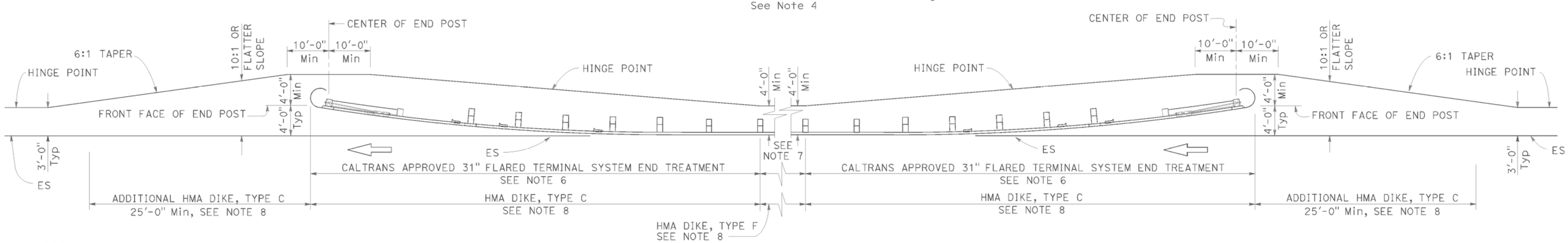

TYPE 11E LAYOUT

(Embankment MGS installation with
31" flared end treatment at each end of railing)
See Note 4

NOTES:

1. Line post, blocks and hardware to be used are shown on Revised Standard Plans RSP A77L1, RSP A77L2, RSP A77M1, RSP A77N1 and RSP A77N2.
2. MGS post spacing to be 6'-3" center to center, except as otherwise noted.
3. Except as noted, line posts are 6" x 8" x 6'-0" wood with 6" x 12" x 1'-2" wood blocks. W6 x 8.5 or W6 x 9 steel posts, 6'-0" in length, with 6" x 12" x 1'-2" notched wood blocks or plastic blocks may be used for 6" x 8" x 6'-0" wood post with 6" x 12" x 1'-2" wood blocks where applicable and when specified.
4. Layout Types 11D through 11L, shown on the A77P Series of Standard Plans, are typically used where MGS is recommended to shield embankment slopes and a crashworthy 31" end treatment is required for both directions of traffic.
5. 31" in-line terminal system end treatments are used where site conditions will not accommodate a flared end treatment.
6. The type of 31" terminal system end treatment to be used will be shown on the Project Plans.
7. Dependent on site conditions (embankment height and side slope), construction of additional MGS (length equal to multiples of 12'-6" with 6'-3" post spacing) may be advisable.
8. Where placement of dike is required with MGS installations, see Revised Standard Plan RSP A77N4 for dike positioning details.

STATE OF CALIFORNIA
DEPARTMENT OF TRANSPORTATION

MIDWEST GUARDRAIL SYSTEM TYPICAL LAYOUTS FOR EMBANKMENTS

NO SCALE

RSP A77P2 DATED JULY 19, 2013 SUPPLEMENTS THE STANDARD PLANS BOOK DATED 2010.

REVISED STANDARD PLAN RSP A77P2

DATE PLOTTED => 30-MAR-2015
TIME PLOTTED => 08:30

Dist	COUNTY	ROUTE	POST MILES TOTAL PROJECT	SHEET No.	TOTAL SHEETS
01	Hum	299	R21.1/R21.5	58	76

Randell D. Hiatt
REGISTERED CIVIL ENGINEER

July 19, 2013
PLANS APPROVAL DATE

REGISTERED PROFESSIONAL ENGINEER
Randell D. Hiatt
No. C50200
Exp. 6-30-15
CIVIL
STATE OF CALIFORNIA

THE STATE OF CALIFORNIA OR ITS OFFICERS OR AGENTS SHALL NOT BE RESPONSIBLE FOR THE ACCURACY OR COMPLETENESS OF SCANNED COPIES OF THIS PLAN SHEET.

TO ACCOMPANY PLANS DATED 03-27-15

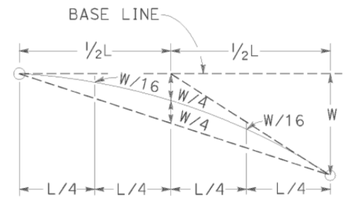

TYPICAL PARABOLIC LAYOUT

BASE LINE (EDGE OF PAVED SHOULDER OR OFFSET LINE OF EDGE OF TRAVELED WAY)

$$Y = \frac{WX^2}{L^2}$$

Y = OFFSET FROM BASE LINE
W = MAXIMUM OFFSET
X = DISTANCE ALONG BASE LINE
L = LENGTH OF FLARE

PARABOLIC FLARE OFFSETS

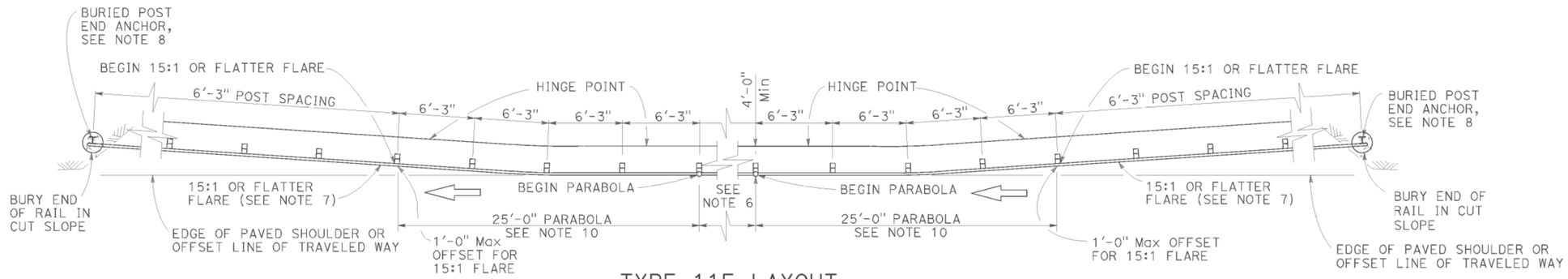

TYPE 11F LAYOUT

(Embankment MGS installation with a buried end anchor treatment at each end of railing)
See Notes 4 and 9

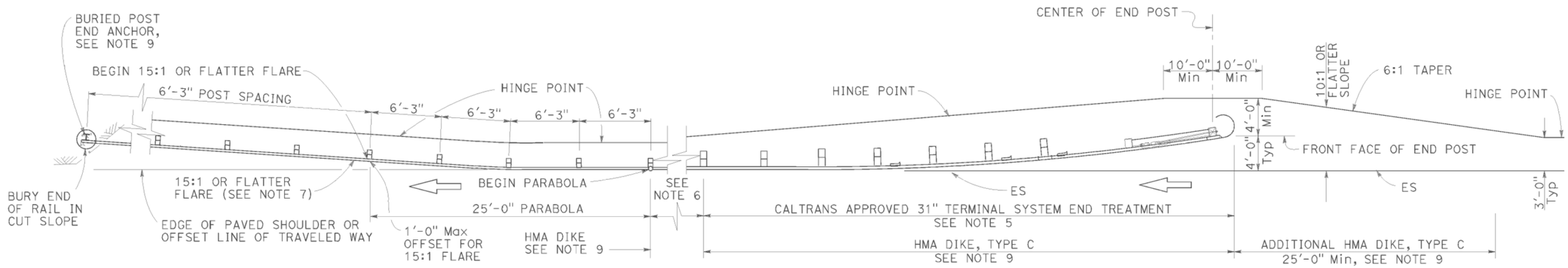

TYPE 11G LAYOUT

(Embankment MGS installation with 31" flared end treatment and a buried end anchor treatment at the ends of railing)
See Notes 4 and 9

NOTES:

1. Line post, blocks and hardware to be used are shown on Revised Standard Plans RSP A77L1, RSP A77L2, RSP A77M1, RSP A77N1 and RSP A77N2.
2. MGS post spacing to be 6'-3" center to center, except as otherwise noted.
3. Except as noted, line posts are 6" x 8" x 6'-0" wood with 6" x 12" x 1'-2" wood blocks. W6 x 8.5 or W6 x 9 steel posts, 6'-0" in length, with 6" x 12" x 1'-2" notched wood blocks or plastic blocks may be used for 6" x 8" x 6'-0" wood post with 6" x 12" x 1'-2" wood blocks where applicable and when specified.
4. Layout Types 11D through 11L, shown on the A77P Series of Standard Plans, are typically used where MGS is recommended to shield embankment slopes and a crashworthy 31" end treatment is required for both directions of traffic.
5. The type of 31" terminal system end treatment to be used will be shown on the Project Plans.
6. Dependent on site conditions (embankment height and side slope), construction of additional MGS (length equal to multiples of 12'-6" with 6'-3" post spacing) may be advisable.
7. The 15:1 or flatter flare used with buried end anchors is based on the edge of the paved shoulder or offset line of edge of the traveled way. The length of MGS within the 15:1 or flatter flare is based on site conditions and should be a length equal to multiples of 12'-6".
8. For details of the buried post end anchor used with Type 11F and 11G Layouts, see Revised Standard Plan RSP A77T2.
9. Where placement of dike is required with MGS installations, see Revised Standard Plan RSP A77N4 for dike positioning details.
10. For typical flare offsets for 25'-0" length parabola with maximum offset of 1'-0", see Revised Standard Plan RSP A77P1.

STATE OF CALIFORNIA
DEPARTMENT OF TRANSPORTATION

MIDWEST GUARDRAIL SYSTEM TYPICAL LAYOUTS FOR EMBANKMENTS

NO SCALE

RSP A77P3 DATED JULY 19, 2013 SUPPLEMENTS THE STANDARD PLANS BOOK DATED 2010.

REVISED STANDARD PLAN RSP A77P3

2010 REVISED STANDARD PLAN RSP A77P3

DATE PLOTTED => 30-MAR-2015
TIME PLOTTED => 08:30

Dist	COUNTY	ROUTE	POST MILES TOTAL PROJECT	SHEET No.	TOTAL SHEETS
01	Hum	299	R21.1/R21.5	59	76

Randell D. Hiatt
REGISTERED CIVIL ENGINEER

November 15, 2013
PLANS APPROVAL DATE

REGISTERED PROFESSIONAL ENGINEER
Randell D. Hiatt
No. C50200
Exp. 6-30-15
CIVIL
STATE OF CALIFORNIA

THE STATE OF CALIFORNIA OR ITS OFFICERS OR AGENTS SHALL NOT BE RESPONSIBLE FOR THE ACCURACY OR COMPLETENESS OF SCANNED COPIES OF THIS PLAN SHEET.

TO ACCOMPANY PLANS DATED 03-27-15

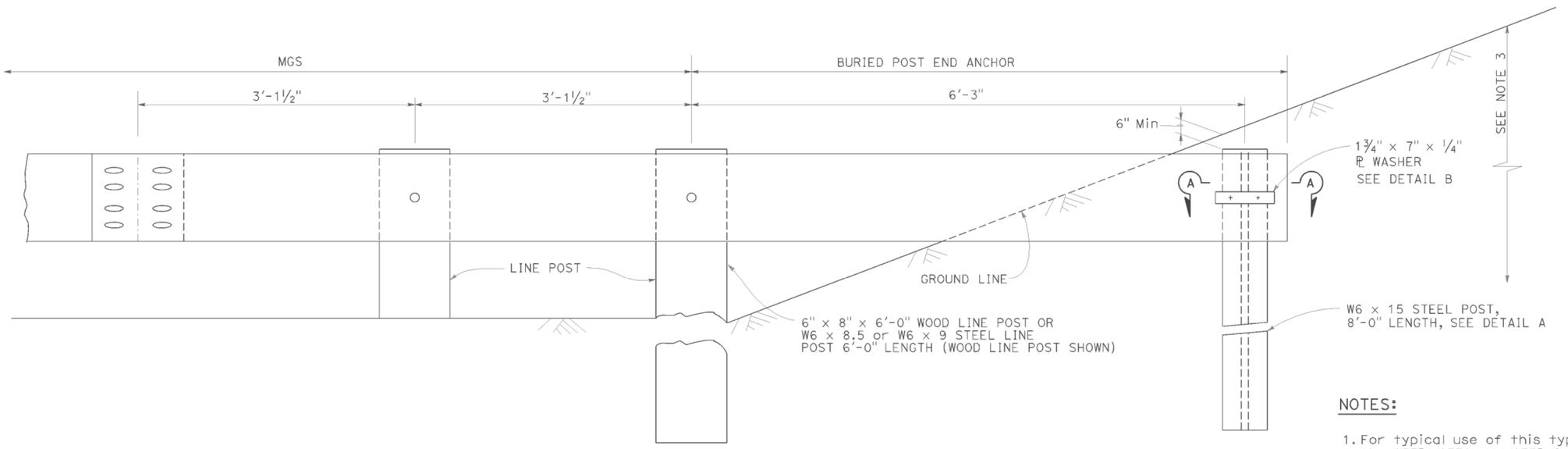

BURIED POST END ANCHOR

See Note 3

NOTES:

1. For typical use of this type of end anchor with MGS see the A77P, A77Q and A77R Series of the Standard Plans.
2. Holes excavation in the slope to construct the buried post end anchor shall be backfilled with selected earth, placed in layers approximately 1'-0" thick. Each layer shall be moistened and thoroughly compacted.
3. The buried post end anchor shall only be constructed at those locations where the slope perpendicular to the roadway is non-traversable.

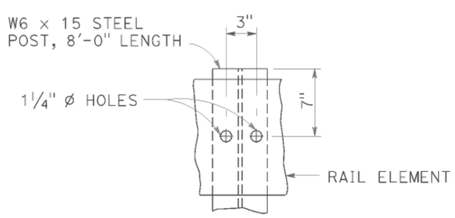

DETAIL A

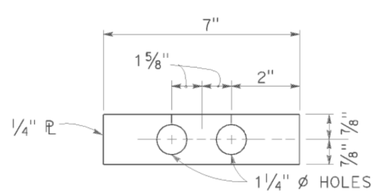

DETAIL B

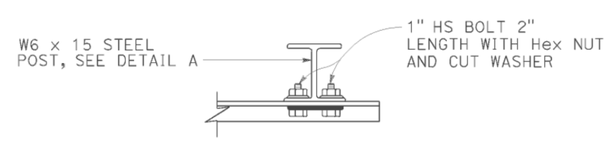

SECTION A-A

STATE OF CALIFORNIA
DEPARTMENT OF TRANSPORTATION

MIDWEST GUARDRAIL SYSTEM BURIED POST END ANCHOR

NO SCALE

RSP A77T2 DATED NOVEMBER 15, 2013 SUPERSEDES RSP A77T2 DATED JULY 19, 2013 THAT SUPPLEMENTS THE STANDARD PLANS BOOK DATED 2010.

REVISED STANDARD PLAN RSP A77T2

2010 REVISED STANDARD PLAN RSP A77T2

DATE PLOTTED => 30-MAR-2015
TIME PLOTTED => 08:30

Dist	COUNTY	ROUTE	POST MILES TOTAL PROJECT	SHEET No.	TOTAL SHEETS
01	Hum	299	R21.1/R21.5	60	76

Randell D. Hiatt
REGISTERED CIVIL ENGINEER

July 19, 2013
PLANS APPROVAL DATE

REGISTERED PROFESSIONAL ENGINEER
Randell D. Hiatt
No. C50200
Exp. 6-30-15
CIVIL
STATE OF CALIFORNIA

THE STATE OF CALIFORNIA OR ITS OFFICERS OR AGENTS SHALL NOT BE RESPONSIBLE FOR THE ACCURACY OR COMPLETENESS OF SCANNED COPIES OF THIS PLAN SHEET.

TO ACCOMPANY PLANS DATED 03-27-15

NOTES:

1. Refer to Revised Standard Plans RSP A77L1 and RSP A77L2 for component details for MGS not shown on this plan.
2. All posts for any standard barrier run shall be of the same type: Wood or Steel.
3. Install posts in soil.

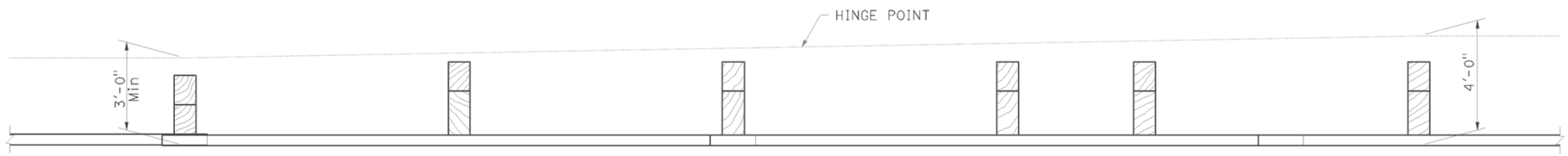

PLAN

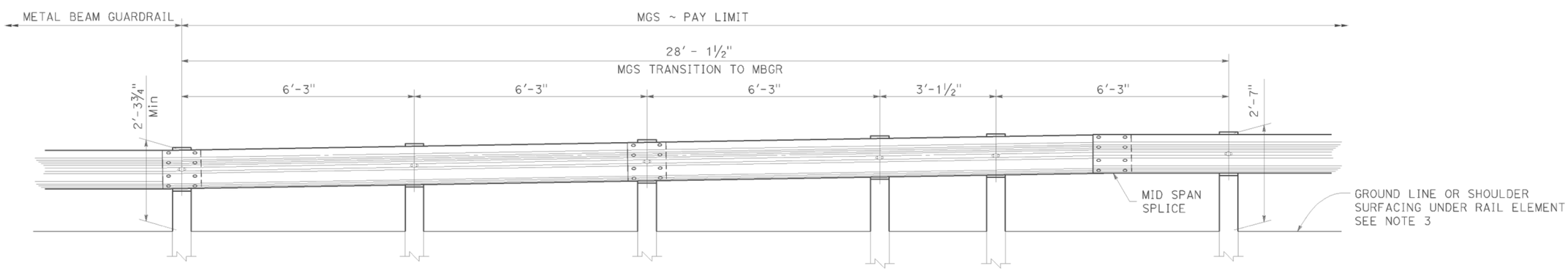

ELEVATION

STATE OF CALIFORNIA
DEPARTMENT OF TRANSPORTATION

MIDWEST GUARDRAIL SYSTEM TRANSITION TO METAL BEAM GUARDRAIL

NO SCALE

RSP A77U5 DATED JULY 19, 2013 SUPPLEMENTS THE STANDARD PLANS BOOK DATED 2010.

REVISED STANDARD PLAN RSP A77U5

2010 REVISED STANDARD PLAN RSP A77U5

DATE PLOTTED => 30-MAR-2015
TIME PLOTTED => 08:30

Dist	COUNTY	ROUTE	POST MILES TOTAL PROJECT	SHEET No.	TOTAL SHEETS
01	Hum	299	R21.1/R21.5	61	76

REGISTERED CIVIL ENGINEER

July 19, 2013
PLANS APPROVAL DATE

REGISTERED PROFESSIONAL ENGINEER
Michael Janzen
No. 44788
Exp. 03-31-14
CIVIL
STATE OF CALIFORNIA

THE STATE OF CALIFORNIA OR ITS OFFICERS OR AGENTS SHALL NOT BE RESPONSIBLE FOR THE ACCURACY OR COMPLETENESS OF SCANNED COPIES OF THIS PLAN SHEET.

TO ACCOMPANY PLANS DATED 03-27-15

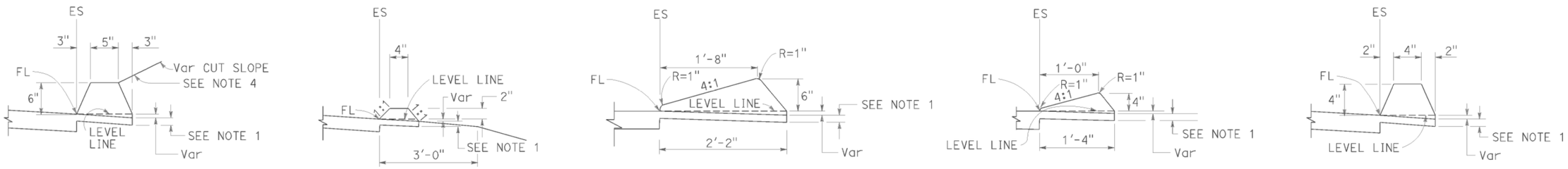

TYPE A
See Note 3

TYPE C

TYPE D

TYPE E

TYPE F
See Note 5

DIKES

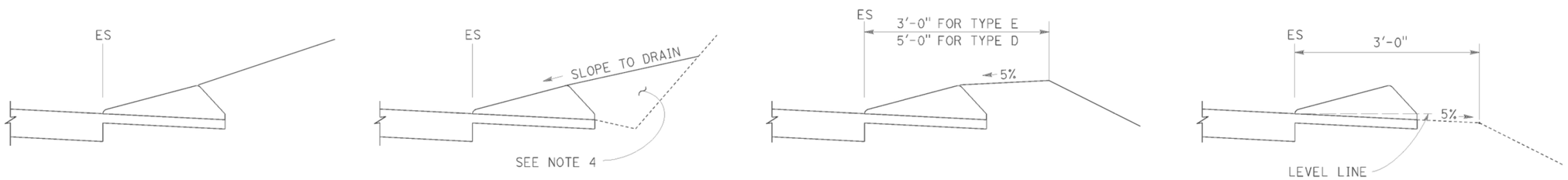

CASE C-1
Cut Slope

CASE C-2
Cut Slope

CASE F

CASE R
See Note 2

TYPE D AND E BACKFILL DETAILS

NOTES:

1. For HMA shoulders only, extend top layer of HMA placed on the shoulder under dike with no joint at the ES. For projects with OGFC shoulders, do not extend OGFC under dike. See project plans for modified dike detail.
2. Case R applies to retrofit only projects where restrictive conditions do not provide enough width for Case F backfill.
3. Type A dike only to be used where restrictive slope conditions do not provide enough width to use Type D or Type E dike.
4. Fill and compact with excavated material to top of dike.
5. Use Type F dike, where dike is required with guard railing installations. See Revised Standard Plan RSP A77N4 for dike positioning details.

DIKE QUANTITIES

TYPE	CUBIC YARDS PER LINEAR FOOT
A	0.0135
C	0.0038
D	0.0293
E	0.0130
F	0.0066

Quantities based on 5% cross slope.

STATE OF CALIFORNIA
DEPARTMENT OF TRANSPORTATION

HOT MIX ASPHALT DIKES

NO SCALE

RSP A87B DATED JULY 19, 2013 SUPERSEDES STANDARD PLAN A87B
DATED MAY 20, 2011 - PAGE 120 OF THE STANDARD PLANS BOOK DATED 2010.

REVISED STANDARD PLAN RSP A87B

2010 REVISED STANDARD PLAN RSP A87B

DATE PLOTTED => 30-MAR-2015
TIME PLOTTED => 08:30

DIST	COUNTY	ROUTE	POST MILES TOTAL PROJECT	SHEET No.	TOTAL SHEETS
01	Hum	299	R21.1/R21.5	62	76

REGISTERED CIVIL ENGINEER

November 15, 2013
PLANS APPROVAL DATE

REGISTERED PROFESSIONAL ENGINEER Cornelis M. Hakim No. C55610 Exp. 12-31-14 CIVIL STATE OF CALIFORNIA

THE STATE OF CALIFORNIA OR ITS OFFICERS OR AGENTS SHALL NOT BE RESPONSIBLE FOR THE ACCURACY OR COMPLETENESS OF SCANNED COPIES OF THIS PLAN SHEET.

TO ACCOMPANY PLANS DATED 03-27-15

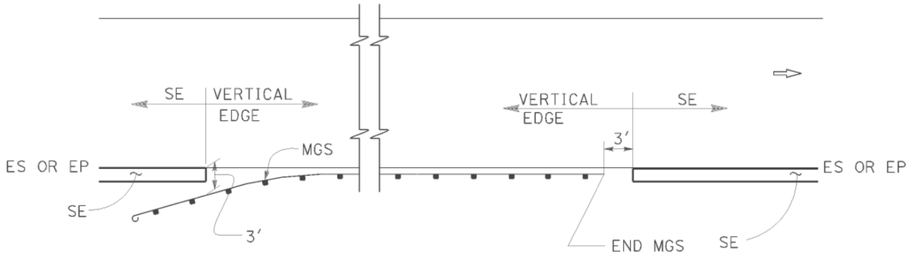

MGS

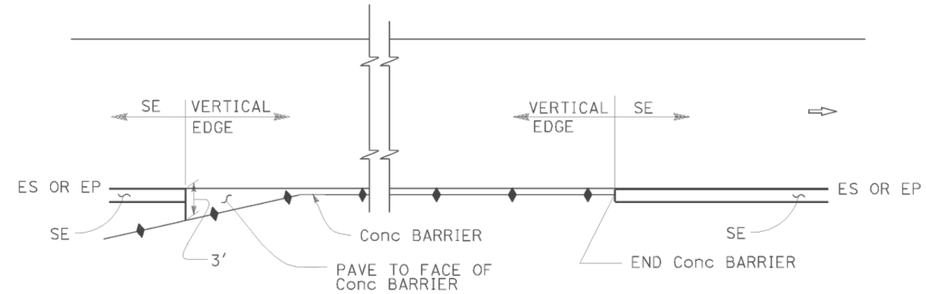

CONCRETE BARRIER

ABBREVIATIONS:

SE SAFETY EDGE

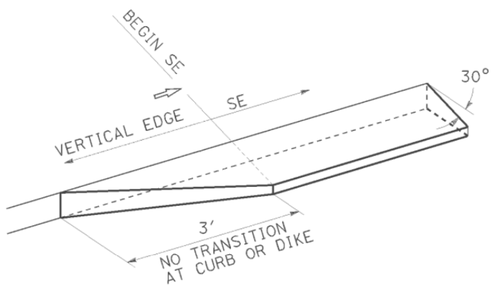

TRANSITION DETAIL FOR CONCRETE ONLY

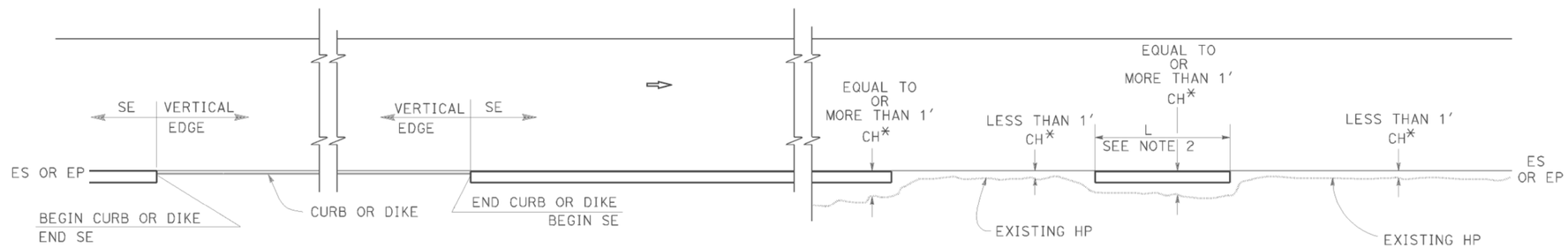

CURB OR DIKE

NARROW SIDE SLOPE

* CH = Distance from ES or EP to existing HP.

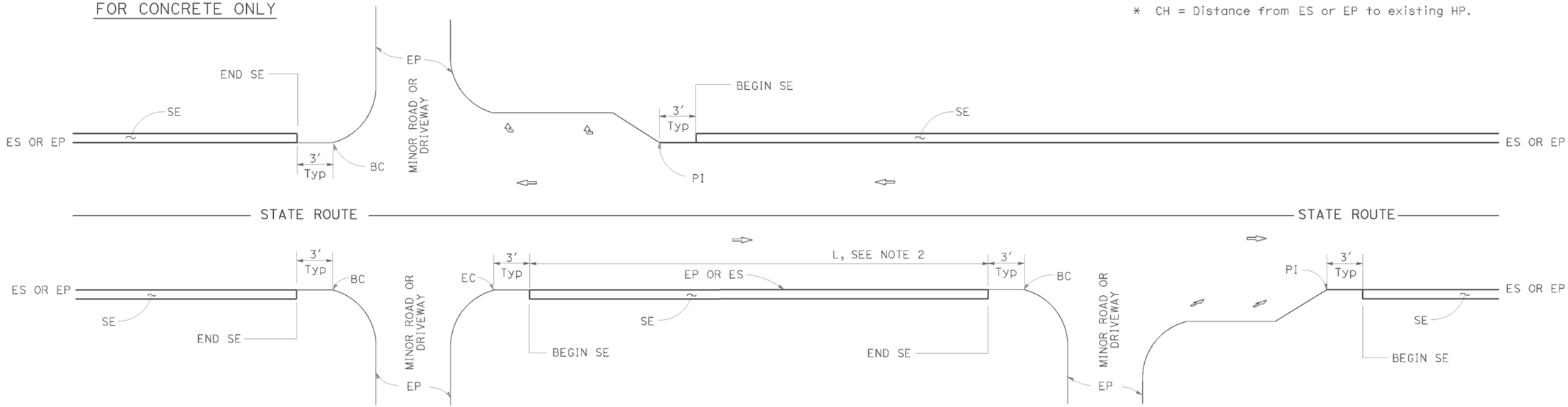

INTERSECTION

MINOR ROADWAY OR DRIVEWAY

DRIVEWAY AND INTERSECTION

NOTES:

1. For details not shown, see Revised Standard Plans RSP P75 and RSP P76.
2. Safety edge is optional when L is less than 30'.

STATE OF CALIFORNIA
DEPARTMENT OF TRANSPORTATION

PAVEMENT EDGE TREATMENTS

NO SCALE

RSP P74 DATED NOVEMBER 15, 2013 SUPERSEDES RSP P74 DATED JANUARY 20, 2012 THAT SUPPLEMENTS THE STANDARD PLANS BOOK DATED 2010.

REVISED STANDARD PLAN RSP P74

2010 REVISED STANDARD PLAN RSP P74

DATE PLOTTED => 30-MAR-2015
TIME PLOTTED => 08:30

DIST	COUNTY	ROUTE	POST MILES TOTAL PROJECT	SHEET No.	TOTAL SHEETS
01	Hum	299	R21.1/R21.5	63	76

REGISTERED CIVIL ENGINEER

November 15, 2013
PLANS APPROVAL DATE

REGISTERED PROFESSIONAL ENGINEER
Cornelis M. Hakim
No. C55610
Exp. 12-31-14
CIVIL
STATE OF CALIFORNIA

THE STATE OF CALIFORNIA OR ITS OFFICERS OR AGENTS SHALL NOT BE RESPONSIBLE FOR THE ACCURACY OR COMPLETENESS OF SCANNED COPIES OF THIS PLAN SHEET.

TO ACCOMPANY PLANS DATED 03-27-15

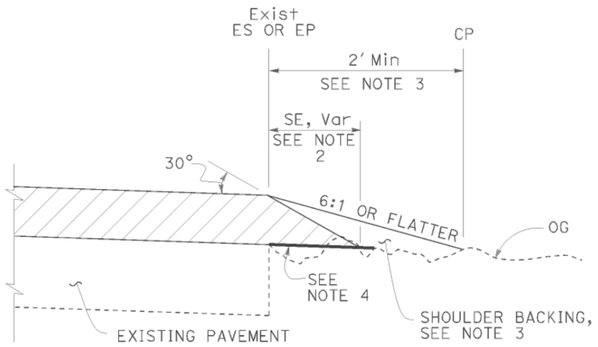

CASE A
Safety Edge

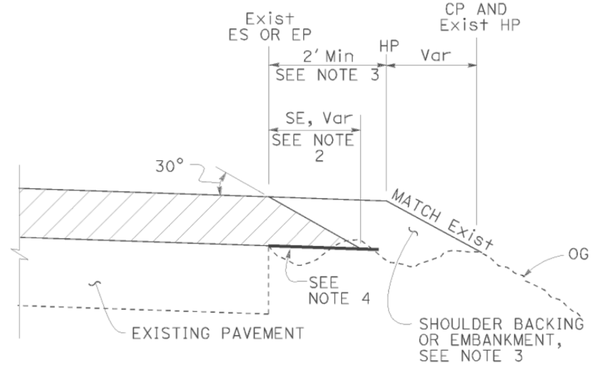

CASE B
Safety Edge

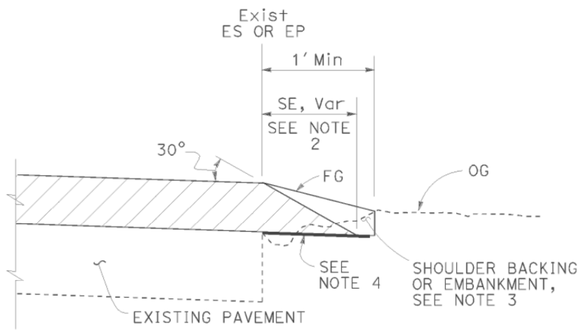

CASE C
Safety Edge

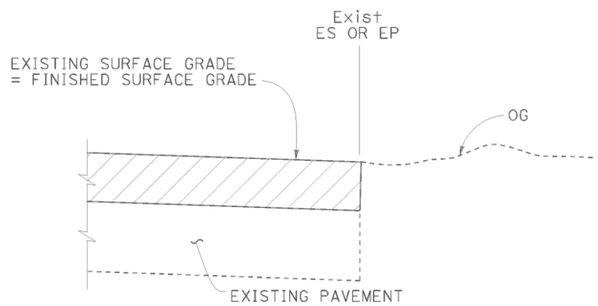

CASE D
Vertical Edge

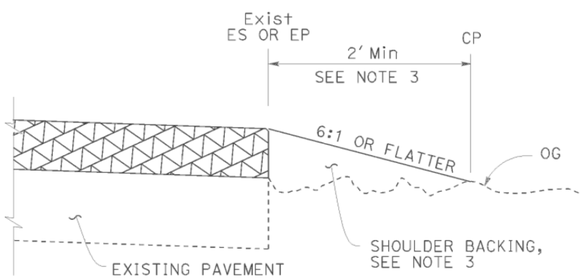

CASE E
Vertical Edge

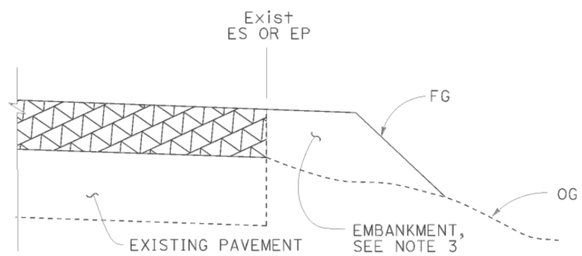

CASE F
Vertical Edge
* See Table A and Revised Std Plan RSP P74

LEGEND:

- HMA OVERLAY
- HMA OR CONCRETE OVERLAY
- CONCRETE OVERLAY

ABBREVIATIONS:

SE SAFETY EDGE
TT TOTAL THICKNESS OF SE

TABLE A
EDGE TREATMENT FOR VARIOUS OVERLAY THICKNESS AND CONDITIONS

	OVERLAY THICKNESS	
FIELD CONDITION	LESS THAN 0.15'	0.15' OR MORE
Exist SLOPE 6:1 OR FLATTER	CASE E	CASE A
Exist SLOPE 3:1 TO 6:1	CASE E	CASE B
Exist SLOPE STEEPER THAN 3:1	CASE F	CASE F
CUT SECTION (REPLACE, COLD PLANE, MILL PAVEMENT)	CASE D	CASE C

ADDITIONAL HMA OR CONCRETE QUANTITIES FOR SE/SIDE/MILE

TYPICAL CROSS SECTION	TT	TOTAL ADDITIONAL MATERIAL FOR SE/SIDE/MILE		
		HMA (TON)	CONCRETE (CY)*	CONCRETE (CY)**
TT	0.15'	NA	NA	NA
	0.20'	13.7	NA	NA
	0.30'	30.9	NA	NA
	0.40'	54.9	NA	NA
	0.45'	69.4	NA	NA
TT 0.43'	0.50'	84.2	NA	NA
	0.60'	113.9	NA	NA
	0.70'	143.6	70.9	94.2
	0.80'	173.3	85.6	112.2
	0.90'	203.0	100.3	130.2
	1.00'	232.7	114.9	148.2
	1.10'	262.4	129.6	166.2
	1.20'	292.1	144.3	184.2

* For Detail "A"
** For Optional Detail "A"

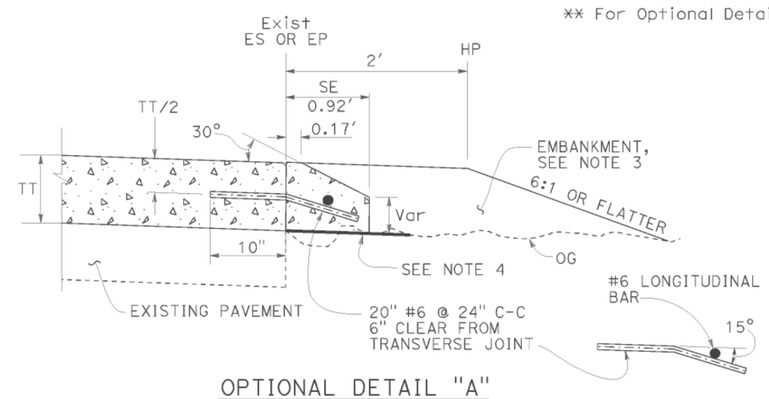

OPTIONAL DETAIL "A"
For concrete overlay
See Note 5

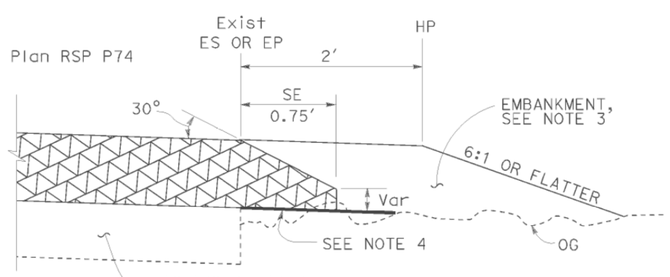

DETAIL "A"
For HMA overlay thickness more than 0.43' or concrete overlay

NOTES:

1. For limits of safety edge and vertical edge treatments, see Revised Standard Plan RSP P74.
2. Details shown for HMA overlay thickness less than 0.43'. See Detail "A" for HMA overlay thickness more than 0.43' or concrete overlay.
3. For locations and limits of shoulder backing or embankment see project plans.
4. Grade existing ground to place safety edge. 1' minimum width
5. Safety edge transverse joint must match overlay transverse joint. End of #6 longitudinal bar must be 2" ±½" clear from transverse joint.
6. Safety edge is not needed in the area of MGS, barrier, right turn lane and acceleration lane. See Revised Standard Plan RSP P74.

STATE OF CALIFORNIA
DEPARTMENT OF TRANSPORTATION

PAVEMENT EDGE TREATMENTS-OVERLAYS

NO SCALE

RSP P75 DATED NOVEMBER 15, 2013 SUPERSEDES RSP P75 DATED JANUARY 20, 2012 THAT SUPPLEMENTS THE STANDARD PLANS BOOK DATED 2010.

REVISED STANDARD PLAN RSP P75

2010 REVISED STANDARD PLAN RSP P75

DATE PLOTTED => 30-MAR-2015
TIME PLOTTED => 08:30

DIST	COUNTY	ROUTE	POST MILES TOTAL PROJECT	SHEET No.	TOTAL SHEETS
01	Hum	299	R21.1/R21.5	64	76

REGISTERED CIVIL ENGINEER

November 15, 2013
PLANS APPROVAL DATE

REGISTERED PROFESSIONAL ENGINEER
Cornelis M. Hakim
No. C55610
Exp. 12-31-14
CIVIL
STATE OF CALIFORNIA

THE STATE OF CALIFORNIA OR ITS OFFICERS OR AGENTS SHALL NOT BE RESPONSIBLE FOR THE ACCURACY OR COMPLETENESS OF SCANNED COPIES OF THIS PLAN SHEET.

TO ACCOMPANY PLANS DATED 03-27-15

LEGEND:

- HMA PAVEMENT
- HMA OR CONCRETE PAVEMENT
- CONCRETE PAVEMENT

ABBREVIATIONS:

SE SAFETY EDGE
TT TOTAL THICKNESS OF SE
HW HINGE WIDTH, DISTANCE FROM ES OR EP TO HP

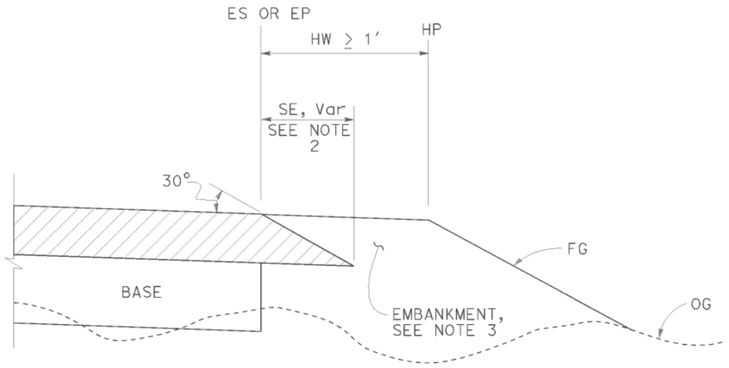

CASE K
Safety Edge - Fill Section, HW ≥ 1′

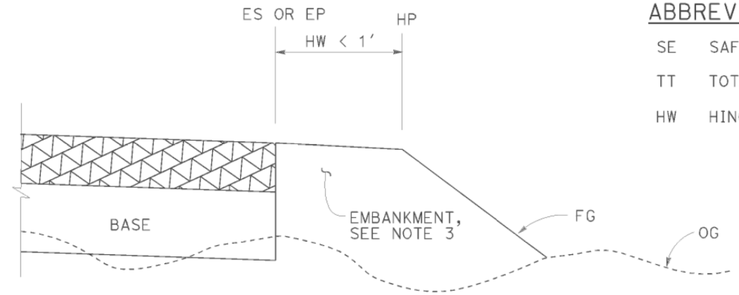

CASE L
Vertical Edge - Fill Section, HW < 1′

FILL SECTION

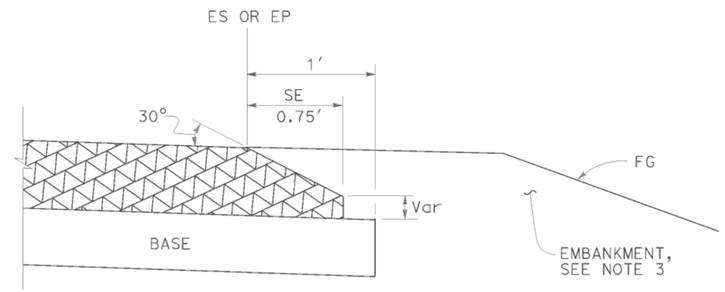

DETAIL "B"
For HMA pavement thickness more than 0.43′ or concrete pavement

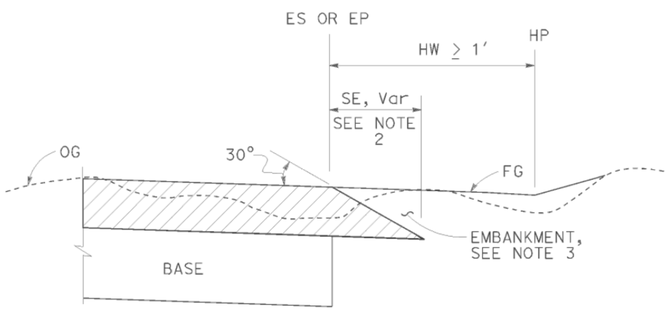

CASE M
Safety Edge - Cut Section, HW ≥ 1′

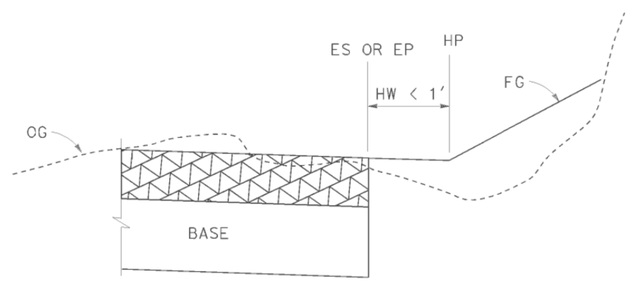

CASE N
Vertical Edge - Cut Section, HW < 1′

CUT SECTION

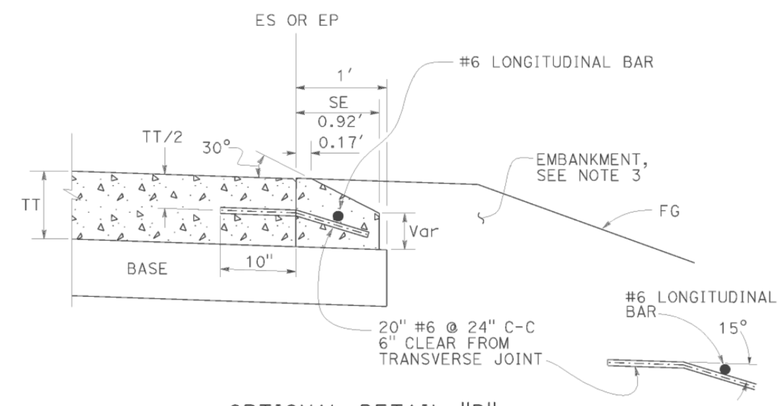

OPTIONAL DETAIL "B"
For concrete pavement
See Note 4

NOTES:

1. For limits of safety edge and vertical edge treatments, see Revised Standard Plan RSP P74
2. Details shown for HMA pavement thickness less than 0.43′. See Detail "B" for HMA pavement thickness more than 0.43′ or concrete pavement.
3. For locations and limits of embankment see project plans.
4. Safety edge transverse joint must match pavement transverse joint. End of #6 longitudinal bar must be 2" ±½" clear from transverse joint.
5. Safety edge is not needed in the area of MGS, barrier, right turn lane and acceleration lane. See Revised Standard Plan RSP P74.

STATE OF CALIFORNIA
DEPARTMENT OF TRANSPORTATION

PAVEMENT EDGE TREATMENTS-NEW CONSTRUCTION

NO SCALE

RSP P76 DATED NOVEMBER 15, 2013 SUPERSEDES RSP P76 DATED JANUARY 20, 2012 THAT SUPPLEMENTS THE STANDARD PLANS BOOK DATED 2010.

REVISED STANDARD PLAN RSP P76

2010 REVISED STANDARD PLAN RSP P76

DATE PLOTTED => 30-MAR-2015
TIME PLOTTED => 08:30

TO ACCOMPANY PLANS DATED 03-27-15

Dist	COUNTY	ROUTE	POST MILES TOTAL PROJECT	SHEET No.	TOTAL SHEETS
01	Hum	299	R21.1/R21.5	65	76

Glenn DeCou
REGISTERED CIVIL ENGINEER

October 19, 2012
PLANS APPROVAL DATE

REGISTERED PROFESSIONAL ENGINEER Glenn DeCou No. C34547 Exp. 9-30-13 CIVIL STATE OF CALIFORNIA

THE STATE OF CALIFORNIA OR ITS OFFICERS OR AGENTS SHALL NOT BE RESPONSIBLE FOR THE ACCURACY OR COMPLETENESS OF SCANNED COPIES OF THIS PLAN SHEET.

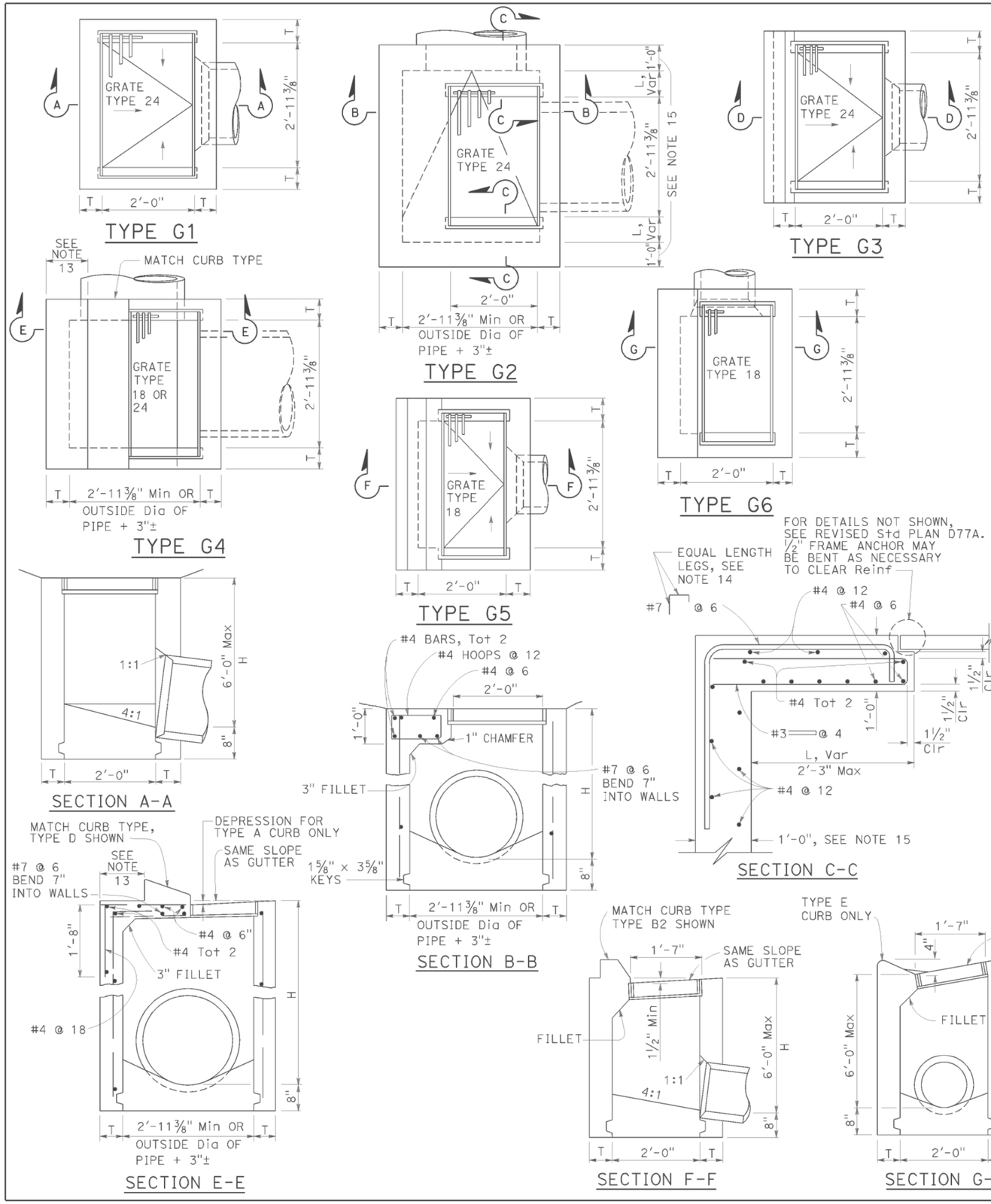

NOTES:

1. "H" is the difference in elevation between the outlet pipe flow line and the normal gutter grade line undepressed.
2. For "T" wall thickness, see Table A below.
3. Wall reinforcing not required when "H" is 8'-0" or less and the unsupported width or length is 7'-0" or less. Walls exceeding these limits shall be reinforced with #4 bars @ 1'-6" ± centers placed 1½" clear to inside of box unless otherwise shown.
4. Inlet bottom reinforcing not required. See Standard Plan D74C for alternative reinforced bottom and alternative half round bottom.
5. Steps-None required where "H" is less than 2'-6". Where "H" is 2'-6" or more, install steps with lowest rung 1'-0" above the floor and highest rung not more than 6" below top of inlet. The distance between steps shall not exceed 1'-0" and shall be uniform throughout the length of the wall. Place steps in the wall without an opening. Steps inserts may be substituted for the bar steps. Step inserts shall comply with State Industrial Safety requirements. See Standard Plan D74C for step details.
6. Details shown apply to both metal and concrete pipe.
7. Pipe(s) can be placed in any wall.
8. Curb section shall match adjacent curb.
9. Basin floors shall have wood trowel finish and a minimum slope of 12:3 from all directions toward outlet pipe.
10. Set inlet so that grate bars are parallel to direction of principal surface flow.
11. See Revised Standard Plans D77A and D77B for grate and frame details and weights of miscellaneous iron and steel.
12. See Standard Plan D78A for gutter depression details.
13. This dimenison will vary with different grates, curbs types, box width and wall thickness.
14. Bar may be rotated as necessary to clear opening. Where "L" is 6" or less, bar may be omitted.
15. Where "L" is 6" or less, wall thickness shall be as shown in Table A.
16. Cast-in-place inlets to be formed around all pipes/stubs intersecting the inlet, and concrete poured in one continuous operation. Precast inlets shall have mortared connections conforming to details for Type GCP Inlet shown on Standard Plan D75B. See Standard Specifications for mortar composition.

TABLE A

CONCRETE QUANTITIES				
TYPE	H=3'-0" TO 8'-0" (T=6")		H=8'-1" TO 20'-0" (T=8")	
	H=3'-0" (CY)	ADDITIONAL PCC PER FOOT (CY)	H=8'-1" (CY)	ADDITIONAL PCC PER FOOT (CY)
G-1	0.95	0.220	See Note A	SEE NOTE A
G-2*	1.31	0.255	3.50	0.357
G-3	1.03	0.220	See Note A	SEE NOTE A
G-4* (TYPE 24)	1.27	0.255	3.48	0.357
G-4* (TYPE 18)	1.30	0.255	3.50	0.357
G-5	1.02	0.220	SEE NOTE A	SEE NOTE A
G-6	1.04	0.220	SEE NOTE A	SEE NOTE A

TABLE BASED ON 8" FLOOR SLAB. NO DEDUCTIONS ARE TO BE MADE TO THESE QUANTITIES BECAUSE OF PIPE OPENINGS, DIFFERENT FLOOR ALTERNATIVES OR DIFFERENT CURB TYPES. * QUANTITIES FOR TYPE G-2 AND G-4 INLETS BASED ON THE MINIMUM INTERIOR DIMENSIONS.

NOTE A:

Maximum allowable height 6'-0".

STATE OF CALIFORNIA
DEPARTMENT OF TRANSPORTATION

DRAINAGE INLETS

NO SCALE

RSP D73 DATED OCTOBER 19, 2012 SUPERSEDES STANDARD PLAN D73 DATED MAY 20, 2011 - PAGE 156 OF THE STANDARD PLANS BOOK DATED 2010.

REVISED STANDARD PLAN RSP D73

2010 REVISED STANDARD PLAN RSP D73

DATE PLOTTED => 30-MAR-2015
TIME PLOTTED => 08:31

Dist	COUNTY	ROUTE	POST MILES TOTAL PROJECT	SHEET No.	TOTAL SHEETS
01	Hum	299	R21.1/R21.5	66	76

Raymond Don Tsztoo
REGISTERED CIVIL ENGINEER

April 19, 2013
PLANS APPROVAL DATE

REGISTERED PROFESSIONAL ENGINEER Raymond Don Tsztoo No. C37332 Exp. 6-30-14 CIVIL STATE OF CALIFORNIA

THE STATE OF CALIFORNIA OR ITS OFFICERS OR AGENTS SHALL NOT BE RESPONSIBLE FOR THE ACCURACY OR COMPLETENESS OF SCANNED COPIES OF THIS PLAN SHEET.

TO ACCOMPANY PLANS DATED 03-27-15

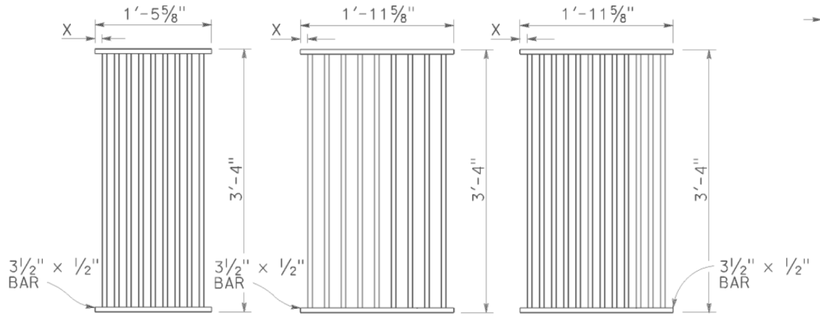

TYPE 18-9

1⅜" Clear spacing. Use within the roadbed on highways where bicycles and pedestrians are excluded.

TYPE 24-9

2" Clear spacing. Use in locations off the roadbed on all types of highways.

TYPE 24-12

1⅜" Clear spacing. Use within the roadbed on highways where bicycles and pedestrians are excluded.

RECTANGULAR GRATE DETAILS

(See table below)

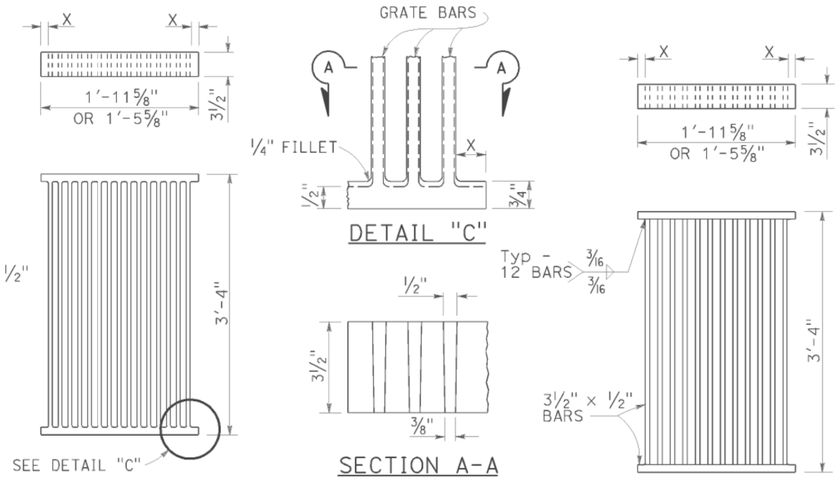

ALTERNATIVE CAST DUCTILE IRON GRATE OR CAST CARBON STEEL GRATE

ALTERNATIVE WELDED GRATE

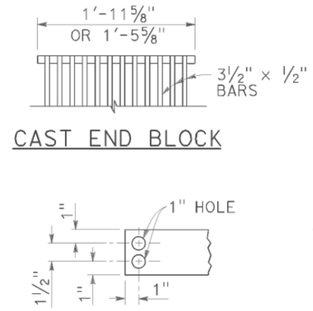

CAST END BLOCK

END OF BAR

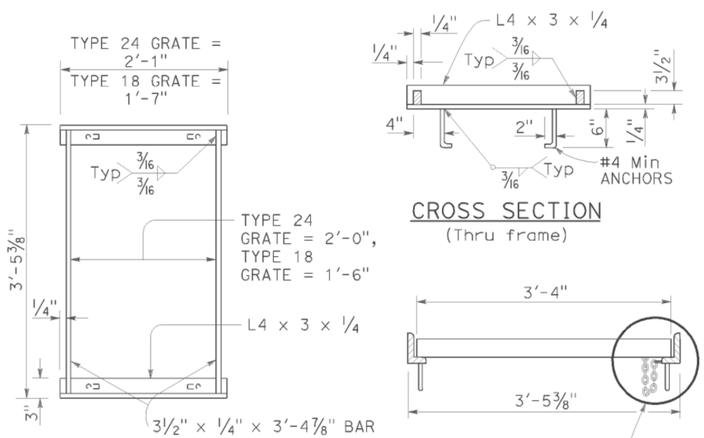

TYPICAL FRAME

CROSS SECTION

(Thru frame)

LONGITUDINAL SECTION

(Thru frame and grate)

RECTANGULAR FRAME DETAILS

(For all rectangular grates)

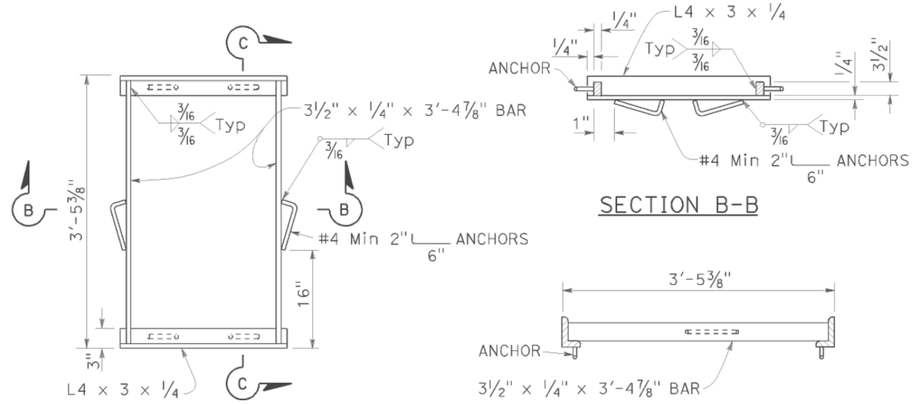

TYPICAL FRAME

SECTION B-B

SECTION C-C

ALTERNATIVE ANCHOR FOR RECTANGULAR FRAME

(For details not shown, See Rectangular Frame Details)

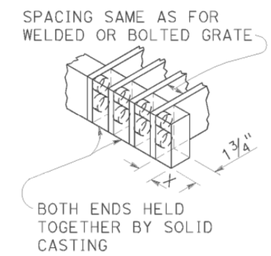

ALTERNATIVE CAST DUCTILE IRON OR CAST CARBON STEEL END BLOCK GRATE

NOTES:

1. Grate type numbers refer to approximate width of grate in inches and number of bars, respectively.
2. Contractor has the option of using cast ductile iron, cast carbon steel, welded, bolted, or cast end block grate.
3. Rounded top of bars optional on all grates.
4. Pipe inlets with a grate shall be placed so that bars parallel direction of principle surface flow.
5. Complete joint penetration butt welds may be substituted for the fillet welds on all anchors.
6. Standard square, hexagon, round or equivalent headed anchors may be substituted for the right angle hooks on the anchors shown on this plan.
7. Grate and frame weights are based on welded grates (weights of face angles, steps, protection bars, etc. are not included).
8. Connect chain to grate and frame only at locations shown on the plans. When chain is required, do not use cast ductile iron grates.

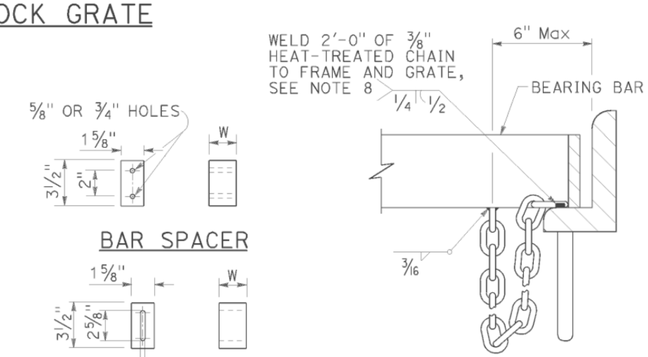

GRATE BAR SPACING TABLE

TYPE	No. OF BARS	CLEAR BAR SPACING	X
18-9	9	1⅜"	1 1/16"
24-9	9	2"	1 9/16"
24-12	12	1⅜"	1¼"

INLET TYPE	COVER TYPE	WEIGHT LB
OS	PLATE	174
OL-7	PLATE	170
OL-10	PLATE	170
OL-14	PLATE	170
OL-21	PLATE	170
OCP	PLATE	112
OCPI	PLATE	112
OCPI	REDWOOD	42
OMP	PLATE	177
OMPI	PLATE	177

INLET TYPE	GRATE TYPE	No. OF GRATES	WEIGHT LB
GDO	24-12	2	634
GOL-7	24-12	1	326
GOL-10	24-12	1	326
GO,G1,G2,G3,G4 (TYPE 24)	24-9	1	263
	24-12	1	326
G4 (TYPE 18),G5,G6	18-9	1	249
GT1	18-9	2	498
GT2	18-9	2	498
GT3	24-12	2	652
GT4	24-12	2	652
TRASH RACK			22
GRATE CHAIN			3

BASIS FOR Misc IRON & STEEL FINAL PAY WEIGHTS FOR DRAINAGE INLETS

(See Note 7)

STATE OF CALIFORNIA
DEPARTMENT OF TRANSPORTATION

GRATE DETAILS No. 1

NO SCALE

RSP D77A DATED APRIL 19, 2013 SUPERSEDES RSP D77A DATED JULY 20, 2012 AND STANDARD PLAN D77A DATED MAY 20, 2011 - PAGE 164 OF THE STANDARD PLANS BOOK DATED 2010.

REVISED STANDARD PLAN RSP D77A

2010 REVISED STANDARD PLAN RSP D77A

DATE PLOTTED => 30-MAR-2015
TIME PLOTTED => 08:31

Dist	COUNTY	ROUTE	POST MILES TOTAL PROJECT	SHEET No.	TOTAL SHEETS
01	Hum	299	R21.1/R21.5	67	76

Raymond Don Tsztoo
REGISTERED CIVIL ENGINEER

April 19, 2013
PLANS APPROVAL DATE

REGISTERED PROFESSIONAL ENGINEER Raymond Don Tsztoo No. C37332 Exp. 6-30-14 CIVIL STATE OF CALIFORNIA

THE STATE OF CALIFORNIA OR ITS OFFICERS OR AGENTS SHALL NOT BE RESPONSIBLE FOR THE ACCURACY OR COMPLETENESS OF SCANNED COPIES OF THIS PLAN SHEET.

TO ACCOMPANY PLANS DATED 03-27-15

2010 REVISED STANDARD PLAN RSP D77B

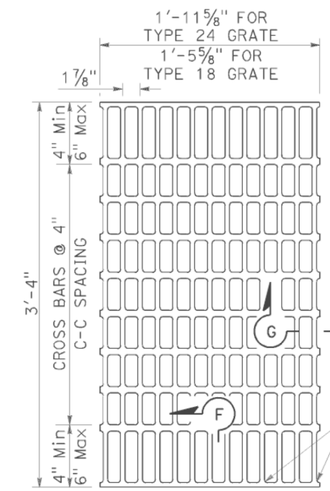

NOTES:

Bearing bars to be 3½" × ¼" bars on 1⅞" centers.

⅜"± ø Cross bars may be fillet welded, resistance welded or electroforged to bearing bars.

Weight of Type 24 grate = 141 LBS.

Weight of Type 18 grate = 107 LBS. (Type 24 grate shown).

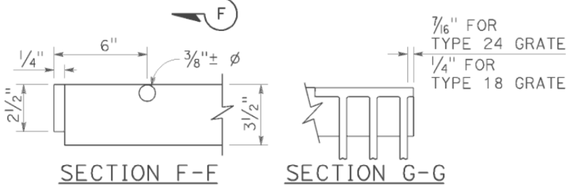

SECTION F-F SECTION G-G

TYPE 18-10 AND 24-13 GRATE

(Welded Steel)

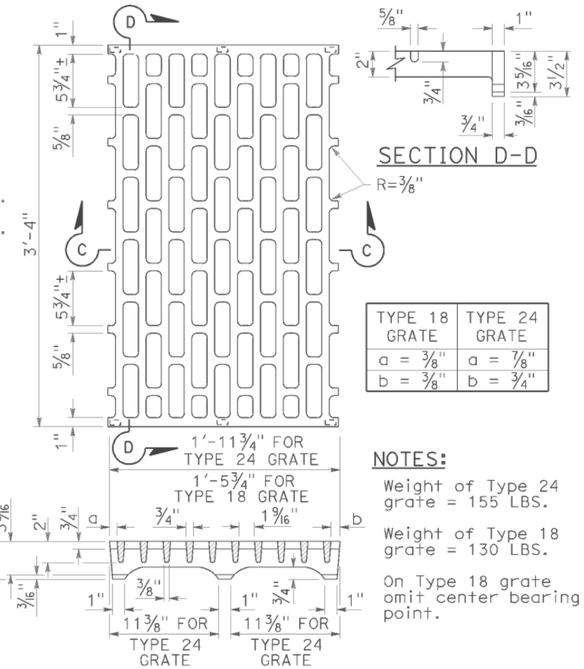

SECTION D-D

TYPE 18 GRATE	TYPE 24 GRATE
a = ⅜"	a = ⅞"
b = ⅜"	b = ¾"

NOTES:

Weight of Type 24 grate = 155 LBS.

Weight of Type 18 grate = 130 LBS.

On Type 18 grate omit center bearing point.

SECTION C-C

TYPE 18-8C AND 24-10C GRATE

(Cast ductile iron)

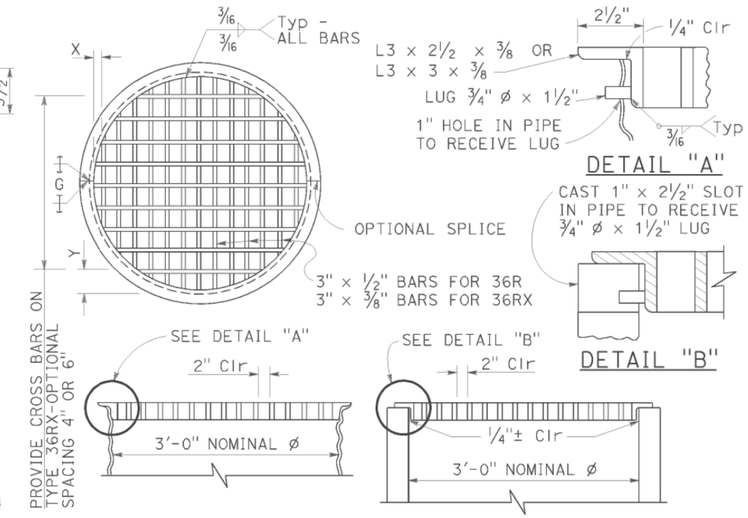

DETAIL "A"

DETAIL "B"

TYPE 36R AND 36RX GRATE DETAILS

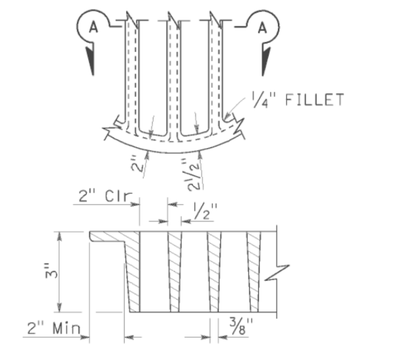

SECTION A-A

ALTERNATIVE CAST DUCTILE IRON GRATE OR CAST CARBON STEEL GRATE TYPE 36R AND 36RX

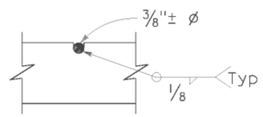

⅜"± ø Cross bars may be fillet welded, resistance welded or electroforged to bearing bars.

CROSS BAR DETAIL TYPE 36RX GRATE (WELDED STEEL)

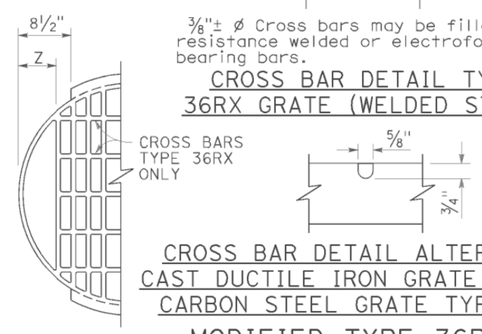

CROSS BAR DETAIL ALTERNATIVE CAST DUCTILE IRON GRATE OR CAST CARBON STEEL GRATE TYPE 36RX

MODIFIED TYPE 36R AND 36RX GRATE FOR ODI INLET

BASIS FOR Misc IRON AND STEEL FINAL PAY WEIGHTS FOR DRAINAGE INLETS

INLET TYPE	GRATE TYPE	No. OF GRATES	WEIGHT LB
GDO (SEE NOTE 4)	24-10C	2	391
	24-10S	2	456
	24-12X	2	473
	24-13	2	374
GO,GOL,G1,G2, G3,G4 (TYPE 24)	24-10C	1	202
	24-10S	1	229
	24-12X	1	239
	24-13	1	188
G4 (TYPE 18) G5,G6	18-8S	1	187
	18-9X	1	187
	18-10	1	149
GT1,GT2	18-8S	2	374
	18-9X	2	374
	18-10	2	298
GT3,GT4	24-10C	2	404
	24-10S	2	458
	24-12X	2	478
	24-13	2	376
ODI	36RX (Mod)	1	196
GMP,GCP,GCPI	36RX	1	215
ODI	36R (Mod)	1	220
GMP,GCP,GCPI	36R	1	236
TRASH RACK			22
GRATE CHAIN			3

NOTES:

1. When alternative grates are allowed - Final pay based on alternative with the lesser weight.
2. Use frame shown on Standard Plan D74A, D74B or RSP D77A as appropriate.
3. When Type 24-10S, 24-12X or 24-13 grates are used with GDO Inlets, a ¼" × 3½" × 3'-4⅞" steel bar shall be welded across the center of inlet frame to separate the individual grates.
4. See Revised Standard Plan RSP D77A for connecting chain to welded grate and frame. When chain is required, do not use cast ductile iron grate.

GRATE BAR SPACING TABLE

TYPE	No. OF BARS	CLEAR BAR SPACING	X	Y 4" SPACING	Y 6" SPACING	Z
36R	13	2"	2⅛"	-	-	-
36RX (STEEL)	15	2"	9/16"	3¾"	5¾"	-
36RX (CAST)	13	2"	2⅛"	3¾"	5¾"	-
36R Mod	12	2"	2⅛"	-	-	5"
36RX Mod (STEEL)	13	2"	9/16"	3¾"	5¾"	5 11/16"
36RX Mod (CAST)	12	2"	2⅛"	3¾"	5¾"	5"

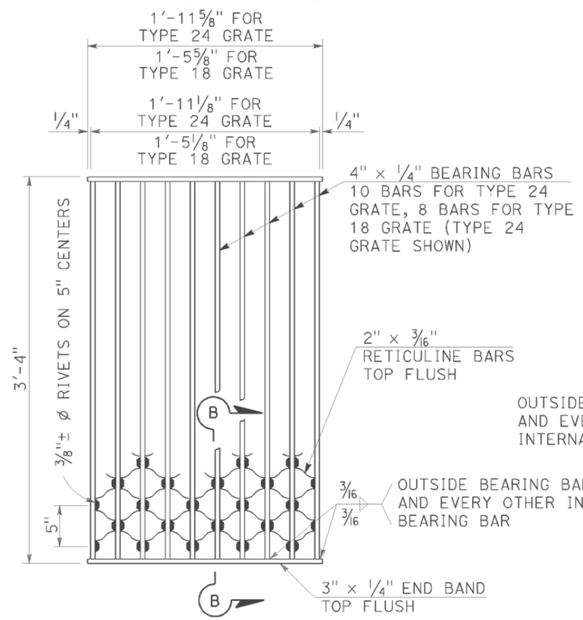

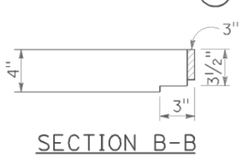

NOTES:

Weight of Type 24 grate = 182 LBS.
Weight of Type 18 grate = 145 LBS.

SECTION B-B

TYPE 18-8S AND 24-10S GRATE

(Welded Steel) Reticuline type

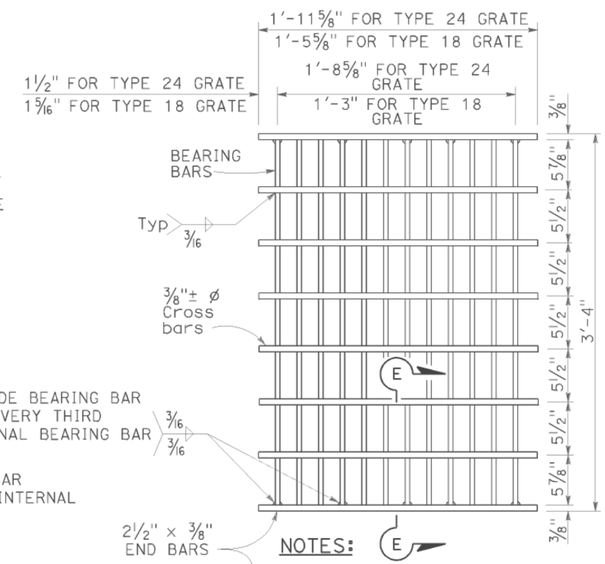

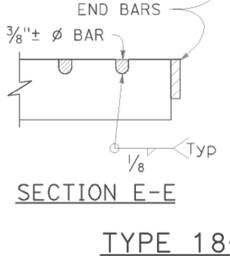

SECTION E-E

NOTES:

Bearing bars to be 3½" × ⅜" bars on 1⅞" centers.

12 Bars for Type 24 grate - 9 bars for Type 18 grates. (Type 24 grate shown).

Weight of Type 24 grate = 192 LBS.

Weight of Type 18 grate = 145 LBS.

⅜"± ø Cross bars may be fillet welded, resistance welded or electroforged to bearing bars.

TYPE 18-9X AND 24-12X GRATE

(Welded Steel)

STATE OF CALIFORNIA
DEPARTMENT OF TRANSPORTATION

GRATE DETAILS No. 2

NO SCALE

RSP D77B DATED APRIL 19, 2013 SUPERSEDES RSP D77B DATED JULY 20, 2012 AND STANDARD PLAN D77B DATED MAY 20, 2011 - PAGE 165 OF THE STANDARD PLANS BOOK DATED 2010.

REVISED STANDARD PLAN RSP D77B

DATE PLOTTED => 30-MAR-2015
TIME PLOTTED => 08:31

Dist	COUNTY	ROUTE	POST MILES TOTAL PROJECT	SHEET No.	TOTAL SHEETS
01	Hum	299	R21.1/R21.5	68	76

REGISTERED CIVIL ENGINEER

October 21, 2011
PLANS APPROVAL DATE

REGISTERED PROFESSIONAL ENGINEER Tillat Satter No. C42892 Exp. 3-31-12 CIVIL STATE OF CALIFORNIA

THE STATE OF CALIFORNIA OR ITS OFFICERS OR AGENTS SHALL NOT BE RESPONSIBLE FOR THE ACCURACY OR COMPLETENESS OF SCANNED COPIES OF THIS PLAN SHEET.

TO ACCOMPANY PLANS DATED 03-27-15

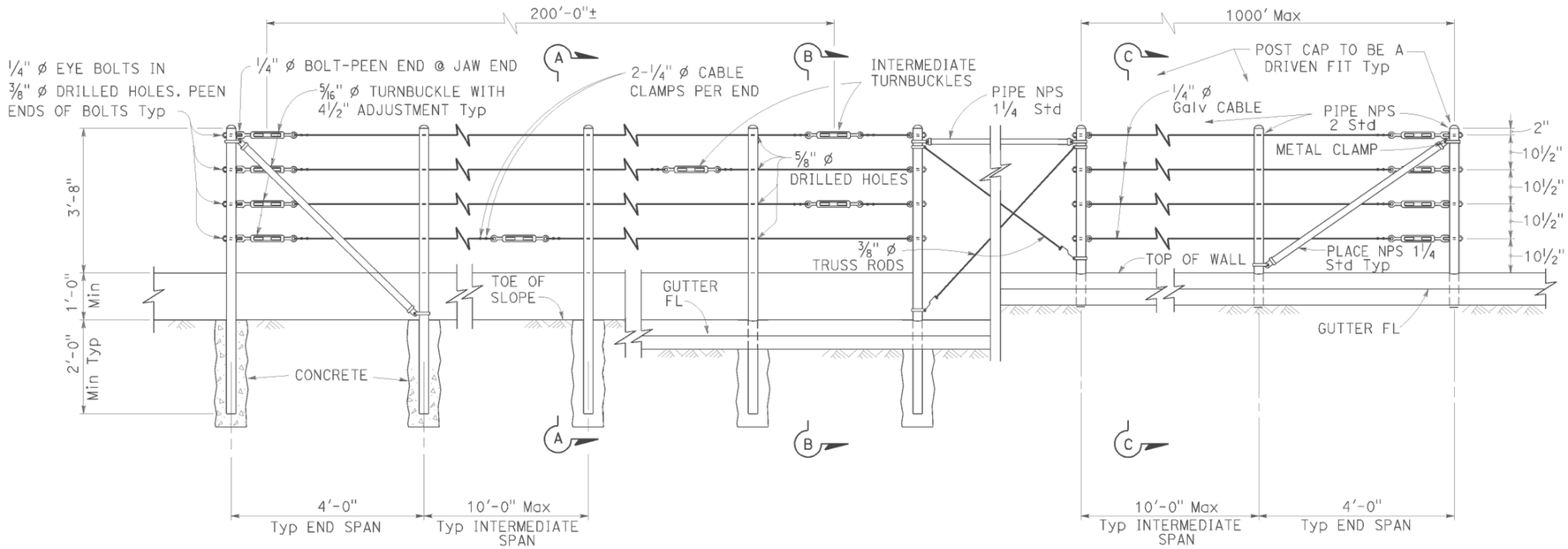

EXISTING WALL (WITHOUT GUTTER)
Existing

RETAINING WALL (WITH GUTTER)
Existing

RETAINING WALL (WITH GUTTER)
New construction

ELEVATION

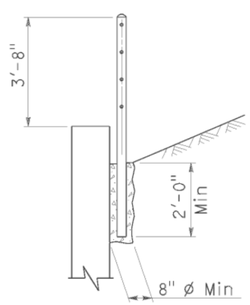

SECTION A-A
Existing

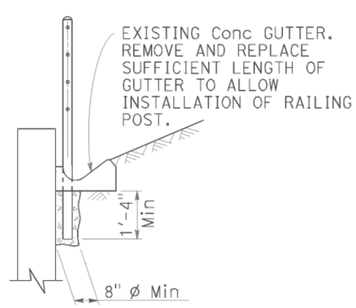

SECTION B-B
Existing

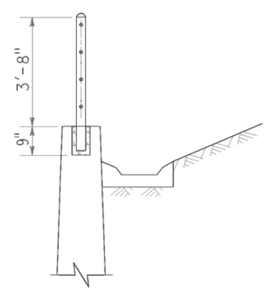

SECTION C-C
New construction

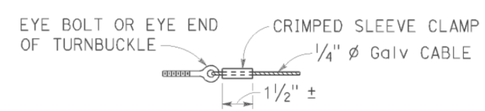

ALTERNATIVE CABLE CONNECTION

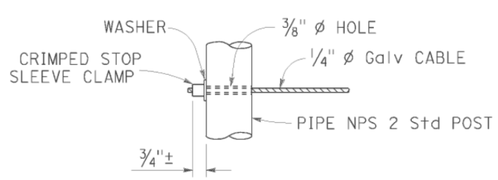

ALTERNATIVE DEAD END ANCHORAGE

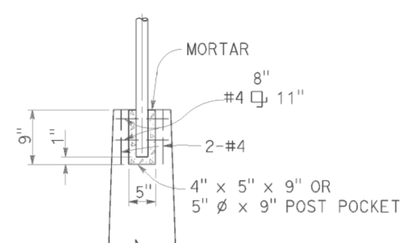

POST POCKET

NOTES:

1. Maximum distance between turnbuckles shall be 200'-0"±.
2. Intermediate turnbuckles to be placed in adjacent spans.
3. Cable shall not be spliced between intermediate turnbuckles and end posts.
4. Posts to be vertical.
5. Alignment of holes in posts may vary to conform to slope of top of retaining wall.
6. The Contractor shall verify all dependent dimensions in the field before ordering or fabricating any material.
7. Line posts shall be braced horizontally and trussed diagonally in both directions at intervals not to exceed 1000'.
8. Post pockets to be centered in top of wall.
9. Typical end spans, braced in both directions, shall be constructed at changes in line where the angle of deflection is 15° or more.
10. Provide thimbles at all cable loops.

STATE OF CALIFORNIA
DEPARTMENT OF TRANSPORTATION

CABLE RAILING

NO SCALE

RSP B11-47 DATED OCTOBER 21, 2011 SUPERSEDES STANDARD PLAN B11-47 DATED MAY 20, 2011 - PAGE 293 OF THE STANDARD PLANS BOOK DATED 2010.

REVISED STANDARD PLAN RSP B11-47

2010 REVISED STANDARD PLAN RSP B11-47

DATE PLOTTED => 30-MAR-2015
TIME PLOTTED => 08:31

Dist	COUNTY	ROUTE	POST MILES TOTAL PROJECT	SHEET No.	TOTAL SHEETS
01	Hum	299	R21.1/R21.5	69	76

Theresa Gabriel
REGISTERED ELECTRICAL ENGINEER

July 19, 2013
PLANS APPROVAL DATE

REGISTERED PROFESSIONAL ENGINEER
Theresa Aziz Gabriel
No. E15129
Exp. 6-30-14
ELECTRICAL
STATE OF CALIFORNIA

THE STATE OF CALIFORNIA OR ITS OFFICERS OR AGENTS SHALL NOT BE RESPONSIBLE FOR THE ACCURACY OR COMPLETENESS OF SCANNED COPIES OF THIS PLAN SHEET.

TO ACCOMPANY PLANS DATED 03-27-15

LEGEND:

- AB — ABANDON. IF APPLIED TO CONDUIT, REMOVE CONDUCTORS
- BC — INSTALL PULL BOX IN EXISTING CONDUIT RUN
- BP — PEDESTRIAN BARRICADE, TYPE AS INDICATED ON PLAN
- CB — INSTALL CONDUIT INTO EXISTING PULL BOX
- CC — CONNECT NEW AND EXISTING CONDUIT. REMOVE EXISTING CONDUCTORS AND INSTALL CONDUCTORS AS INDICATED
- CF — CONDUIT TO REMAIN FOR FUTURE USE. REMOVE CONDUCTORS. INSTALL PULL TAPE
- DH — DETECTOR HANDHOLE
- FA — FOUNDATION TO BE ABANDONED
- IS — INSTALL SIGN ON SIGNAL MAST ARM
- NS — NO SLIP BASE ON STANDARD
- PEC — PHOTOELECTRIC CONTROL
- PEU — PHOTOELECTRIC UNIT
- RC — EQUIPMENT OR MATERIAL TO BE REMOVED AND BECOME THE PROPERTY OF THE CONTRACTOR
- RE — REMOVE ELECTROLIER, FUSES AND BALLAST. TAPE ENDS OF CONDUCTORS
- RL — RELOCATE EQUIPMENT
- RR — REMOVE AND REUSE EQUIPMENT
- RS — REMOVE AND SALVAGE EQUIPMENT
- SC — SPLICE NEW TO EXISTING CONDUCTORS
- SD — SERVICE DISCONNECT
- TSP — TELEPHONE SERVICE POINT

ABBREVIATIONS

APS	ACCESSIBLE PEDESTRIAN SIGNAL
BBS	BATTERY BACKUP SYSTEM
BC	BOLT CIRCLE
BPB	BICYCLE PUSH BUTTON
C	CONDUIT
CB	CIRCUIT BREAKER
CCTV	CLOSED CIRCUIT TELEVISION
Ckt	CIRCUIT
CMS	CHANGEABLE MESSAGE SIGN
Ctid	CALTRANS IDENTIFICATION
Comm	COMMUNICATION
DLC	LOOP DETECTOR LEAD-IN CABLE
EMS	EXTINGUISHABLE MESSAGE SIGN
EVUC	EMERGENCY VEHICLE UNIT CABLE
EVUD	EMERGENCY VEHICLE UNIT DETECTOR
FB	FLASHING BEACON
FBCA	FLASHING BEACON CONTROL ASSEMBLY
FBS	FLASHING BEACON WITH SLIP BASE
FO	FIBER OPTIC
G	EQUIPMENT GROUNDING CONDUCTOR
GB	GROUND BUS
GFCI	GROUND FAULT CIRCUIT INTERRUPTER
HAR	HIGHWAY ADVISORY RADIO
Hex	HEXAGONAL
HPS	HIGH PRESSURE SODIUM
IISNS	INTERNALLY ILLUMINATED STREET NAME SIGN
ISL	INDUCTION SIGN LIGHTING
LED	LIGHT EMITTING DIODE
LMA	LUMINAIRE MAST ARM
LPS	LOW PRESSURE SODIUM
Ltg	LIGHTING
Lum	LUMINAIRE
M	METERED
MAT	MAST ARM MOUNTING TOP ATTACHMENT
MAS	MAST ARM MOUNTING SIDE ATTACHMENT
M/M	MULTIPLE TO MULTIPLE TRANSFORMER
Mtg	MOUNTING
MV	MERCURY VAPOR LIGHTING FIXTURE
MVDS	MICROWAVE VEHICLE DETECTION SYSTEM
N	NEUTRAL (GROUNDED CONDUCTOR)
NB	NEUTRAL BUS
NC	NORMALLY CLOSE
NO	NORMALLY OPEN
P	CIRCUIT BREAKER'S POLE
PB	PULL BOX
PBA	PUSH BUTTON ASSEMBLY
PEC	PHOTOELECTRIC CONTROL
Ped	PEDESTRIAN
PEU	PHOTOELECTRIC UNIT
PT	CONDUIT WITH PULL TAPE
RE	RELOCATED EQUIPMENT
RM	RAMP METERING
RWIS	ROADSIDE WEATHER INFORMATION SYSTEM
SB	SLIP BASE
SIC	SIGNAL INTERCONNECT CABLE
Sig	SIGNAL
SMA	SIGNAL MAST ARM
SNS	STREET NAME SIGN
SP	SERVICE POINT
TDC	TELEPHONE DEMARCATION CABINET
TMS	TRAFFIC MONITORING STATION
TOS	TRAFFIC OPERATIONS SYSTEM
Veh	VEHICLE
VIVDS	VIDEO IMAGE VEHICLE DETECTION SYSTEM
WIM	WEIGH-IN-MOTION
Xfmr	TRANSFORMER

SOFFIT AND WALL MOUNTED LUMINAIRES

- PENDANT, 70 W HPS UNLESS OTHERWISE SPECIFIED
- FLUSH, 70 W HPS UNLESS OTHERWISE SPECIFIED
- WALL SURFACE, 70 W HPS UNLESS OTHERWISE SPECIFIED
- EXISTING SOFFIT OR WALL LUMINAIRE TO REMAIN UNMODIFIED
- EXISTING SOFFIT OR WALL LUMINAIRE TO BE MODIFIED AS SPECIFIED

NOTE:
Arrow indicates "street side" of luminaire.

COMMONLY USED SYMBOLS FOR UNITED STATES CUSTOMARY UNITS OF MEASUREMENT:

SYMBOL USED	DEFINITIONS
Ω	OHMS
min	MINUTE
s	SECOND
bps	BITS PER SECOND
Bps	BYTES PER SECOND
A	AMPERE
V	VOLT
V(dc)	VOLT (DIRECT CURRENT)
V(ac)	VOLT (ALTERNATING CURRENT)
FC	FOOT - CANDLE
W	WATTS
VA	VOLT-AMPERE
M	MEGA
k	KILO
m	MILLI
μ	MICRO
P	PICO
Hz	HERTZ

MISCELLANEOUS ELECTROLIERS

NEW	EXISTING	
		LUMINAIRE ON WOOD POLE
		NON-STANDARD ELECTROLIER (SEE PROJECT NOTES OR PROJECT PLANS)
		CITY ELECTROLIER
		ELECTROLIER FOUNDATION (FUTURE INSTALLATION)

NOTES:

1. HPS luminaires shall be 310 W HPS when installed on Type 21, 21D, 30, 31 and 32 Standards, unless otherwise specified. HPS luminaires shall be 200 W when installed on other type standards or poles, unless otherwise specified.
2. LED luminaires shall be 235 W when installed on Type 21, 21D, 30, 31 and 32 Standards, unless otherwise specified. LED luminaires shall be 165 W when installed on other type standards or poles, unless otherwise specified.
3. Luminaires shall be the cutoff type, ANSI Type III medium cutoff lighting distribution, unless otherwise specified.

STANDARD ELECTROLIER

NEW	EXISTING	STANDARD TYPE
		15
		15D
		15 STRUCTURE
		15D STRUCTURE
		21
		21D
		21 STRUCTURE
		21D STRUCTURE
		30
		31
		32

STATE OF CALIFORNIA
DEPARTMENT OF TRANSPORTATION

ELECTRICAL SYSTEMS (LEGEND AND ABBREVIATIONS)

NO SCALE

RSP ES-1A DATED JULY 19, 2013 SUPERSEDES STANDARD PLAN ES-1A DATED MAY 20, 2011 - PAGE 425 OF THE STANDARD PLANS BOOK DATED 2010.

REVISED STANDARD PLAN RSP ES-1A

2010 REVISED STANDARD PLAN RSP ES-1A

DATE PLOTTED => 30-MAR-2015
TIME PLOTTED => 08:31

Dist	COUNTY	ROUTE	POST MILES TOTAL PROJECT	SHEET No.	TOTAL SHEETS
01	Hum	299	R21.1/R21.5	70	76

Theresa Gabriel
REGISTERED ELECTRICAL ENGINEER

July 19, 2013
PLANS APPROVAL DATE

REGISTERED PROFESSIONAL ENGINEER Theresa Aziz Gabriel No. E15129 Exp. 6-30-14 ELECTRICAL STATE OF CALIFORNIA

THE STATE OF CALIFORNIA OR ITS OFFICERS OR AGENTS SHALL NOT BE RESPONSIBLE FOR THE ACCURACY OR COMPLETENESS OF SCANNED COPIES OF THIS PLAN SHEET.

TO ACCOMPANY PLANS DATED 03-27-15

CONDUIT

NEW	EXISTING	
		LIGHTING CONDUIT, UNLESS OTHERWISE INDICATED OR NOTED
		TRAFFIC SIGNAL CONDUIT
C	c	COMMUNICATION CONDUIT
T	t	TELEPHONE CONDUIT
F	f	FIRE ALARM CONDUIT
FO	fo	FIBER OPTIC CONDUIT
		CONDUIT TERMINATION
R	r	CONDUIT RISER ATTACHED TO THE STRUCTURE OR SERVICE POLE

SERVICE EQUIPMENT

NEW	EXISTING	
OH	oh	OVERHEAD LINES
U	U	WOOD POLE, "U" INDICATES UTILITY OWNED
		POLE GUY WITH ANCHOR
		UTILITY TRANSFORMER - GROUND MOUNTED
III	III	SERVICE EQUIPMENT ENCLOSURE TYPE. DOOR INDICATES FRONT OF ENCLOSURE
T	t	TELEPHONE DEMARCATION CABINET

POLE-MOUNTED SERVICE DESIGNATION

TYPE H SERVICE, 28'-10" — TYPE OF INSTALLATION AND POLE HEIGHT ABOVE GRADE

FLASHING BEACON

NEW	EXISTING	
R	R	FLASHING BEACON (ONE VEHICLE SIGNAL HEAD WITH BACKPLATE AND VISOR) "R" INDICATES RED INDICATION, "Y" INDICATES YELLOW INDICATION
Y Y	Y Y	FLASHING BEACON WITH TYPE 15-FBS STANDARD AND A SIGN.
R R	R R	FLASHING BEACON WITH TYPES 9, 9A OR 9B SIGN UNLESS OTHERWISE SPECIFIED OR INDICATED

SIGNAL EQUIPMENT

NEW	EXISTING	
C	C	PEDESTRIAN SIGNAL HEAD "C" INDICATES COUNTDOWN PEDESTRIAN HEAD
		PUSH BUTTON ASSEMBLY POST
		PEDESTRIAN BARRICADE
		VEHICLE SIGNAL HEAD (WITH BACKPLATE AND 3-SECTIONS: RED, YELLOW AND GREEN)
		VEHICLE SIGNAL HEAD WITH ANGLE VISOR
PV	PV	MODIFICATIONS OF BASIC SYMBOL: "L" INDICATES ALL NON-ARROW SECTIONS LOUVERED "LG" INDICATES LOUVERED GREEN SECTION ONLY "PV" INDICATES ALL 12" SECTIONS PROGRAMMED VISIBILITY "8" INDICATES ALL 8" SECTIONS (ONLY WHEN SPECIFIED)
		VEHICLE SIGNAL HEAD CONSISTING OF RED, YELLOW AND GREEN LEFT ARROW SECTIONS
		VEHICLE SIGNAL HEAD CONSISTING OF RED AND YELLOW SECTIONS WITH AN UP GREEN ARROW SECTION
		VEHICLE SIGNAL HEAD (5 SECTION) CONSISTING OF RED, YELLOW AND GREEN SECTIONS WITH YELLOW AND GREEN RIGHT ARROW SECTIONS
		TYPE 15TS STANDARD WITH VEHICLE SIGNAL HEAD AND LUMINAIRE
		TYPE 21TS STANDARD WITH VEHICLE SIGNAL HEAD AND LUMINAIRE
		STANDARD WITH LUMINAIRE AND SIGNAL MAST ARMS AND ATTACHED VEHICLE SIGNAL HEADS
		TYPE 1 STANDARD WITH ATTACHED VEHICLE SIGNAL HEADS
		STANDARD WITH A SIGNAL MAST ARM, ATTACHED VEHICLE SIGNAL HEADS AND INTERNALLY ILLUMINATED STREET NAME SIGN
		CONTROLLER ASSEMBLY. DOOR INDICATES FRONT OF CABINET

SIGNAL EQUIPMENT Cont

NEW	EXISTING	
		GUARD POST
		TYPE 1 STANDARD WITH RAMP METERING SIGN
		OPTICAL DETECTOR FOR THE EMERGENCY VEHICLE DETECTION SYSTEM

NOTES:

1. All signal sections shall be 12" unless shown otherwise.
2. Signal heads shall be provided with backplates unless shown otherwise.

ILLUMINATED OVERHEAD SIGN

NEW	EXISTING	
		SINGLE POST, SINGLE ILLUMINATED SIGN, BALANCED BUTTERFLY
		SINGLE POST, DOUBLE ILLUMINATED SIGN, BALANCED BUTTERFLY
		SINGLE POST, SINGLE ILLUMINATED SIGN, FULL CANTILEVER
		DOUBLE POST, SINGLE ILLUMINATED SIGN
		SINGLE ILLUMINATED SIGN MOUNTED ON STRUCTURE
		DOUBLE POST, SINGLE ILLUMINATED SIGN WITH ELECTROLIER

STATE OF CALIFORNIA
DEPARTMENT OF TRANSPORTATION

ELECTRICAL SYSTEMS (LEGEND AND ABBREVIATIONS)

NO SCALE

RSP ES-1B DATED JULY 19, 2013 SUPERSEDES STANDARD PLAN ES-1B DATED MAY 20, 2011 - PAGE 426 OF THE STANDARD PLANS BOOK DATED 2010.

REVISED STANDARD PLAN RSP ES-1B

2010 REVISED STANDARD PLAN RSP ES-1B

DATE PLOTTED => 30-MAR-2015
TIME PLOTTED => 08:31

Dist	COUNTY	ROUTE	POST MILES TOTAL PROJECT	SHEET No.	TOTAL SHEETS
01	Hum	299	R21.1/R21.5	71	76

Theresa Gabriel
REGISTERED ELECTRICAL ENGINEER

July 19, 2013
PLANS APPROVAL DATE

REGISTERED PROFESSIONAL ENGINEER
Theresa Aziz Gabriel
No. E15129
Exp. 6-30-14
ELECTRICAL
STATE OF CALIFORNIA

THE STATE OF CALIFORNIA OR ITS OFFICERS OR AGENTS SHALL NOT BE RESPONSIBLE FOR THE ACCURACY OR COMPLETENESS OF SCANNED COPIES OF THIS PLAN SHEET.

TO ACCOMPANY PLANS DATED 03-27-15

EQUIPMENT IDENTIFICATION

ILLUMINATED SIGN IDENTIFICATION NUMBER:

SIGN No. 12345
10 ISL SCI 1.0

- SIGN NUMBER - PLACE ON POST OR STRUCTURE
- TRANSFORMER RATING (kVA)
- LIGHTING CONTROL TYPE
- NUMBER AND TYPE OF FIXTURES

DO NOT PLACE ON STANDARD OR STRUCTURE

ELECTROLIER OR EQUIPMENT IDENTIFICATION NUMBER:

12345 - 15'-0"

- MAST ARM LENGTH, IF SHOWN. DO NOT PLACE ON STANDARD OR STRUCTURE
- EQUIPMENT NUMBER - PLACE ON STANDARD OR STRUCTURE. EXISTING EQUIPMENT NUMBERS ARE SHOWN IN PARENTHESIS

CONDUIT AND CONDUCTOR IDENTIFICATION:

1½"C, 2#10, 15#14, 2 DLC, 12P#18

- PAIR
- NUMBER AND SIZE OF CONDUCTORS AND CABLES
- SIZE OF CONDUIT IN INCHES

Ø1, Ø2, Ø2P, etc.	TRAFFIC PHASE IDENTIFICATION FOR SIGNAL FACES, DETECTORS AND PHASE DIAGRAMS
1 2 3	LEGEND NUMBERS
A B C	EQUIPMENT, SIGNAL POLES, INSTALLATION OR ITEMS
1 2 3	CONDUIT RUN NUMBERS

SIGNAL AND LIGHTING STANDARD (TYPICAL DESIGNATION):

19A - 3 - 100

- WIND VELOCITY = 100 mph
- CASE 3 ARM LOADING
- STANDARD TYPE
- STANDARD PLAN SHEET NUMBER
- DETAIL, NUMBER, SECTION, TYPE OR ELEVATION

MISCELLANEOUS EQUIPMENT

NEW	EXISTING	
CMS	cms	CHANGEABLE MESSAGE SIGN
		CLOSED CIRCUIT TELEVISION CAMERA
		HIGHWAY ADVISORY RADIO POLE AND ANTENNA
EMS	ems	EXTINGUISHABLE MESSAGE SIGN
M V	m v	DETECTION DEVICE M = MICROWAVE SENSOR V = VIDEO IMAGE SENSOR

WIRING DIAGRAM LEGEND

- EXTERNAL CONDUCTOR
- CONDUCTOR OR BUS
- TIE POINT
- CONTACTOR COIL
- CONTACTOR, NO CONTACT
- TERMINAL BLOCKS
- CONTACTOR, NC CONTACT
- ENCLOSURE BOND
- GROUNDING ELECTRODE
- CIRCUIT BREAKER
- RECEPTACLE

PULL BOXES

NEW	EXISTING	
		PULL BOX, No. 5 UNLESS OTHERWISE INDICATED OR NOTED
3	9A(21)	PULL BOX, ADDITIONAL DESIGNATIONS OR DESCRIPTIONS

3 No. 3½ PULL BOX
5 No. 5 PULL BOX
6 No. 6 PULL BOX
7 No. 7 (CEILING PULL BOX)
8 No. 8 (PENDANT SOFFIT PULL BOX)
9 No. 9 PULL BOX
9A No. 9A PULL BOX

(C) COMMUNICATIONS PULL BOX
(E) PULL BOX WITH EXTENSION
(S) SPRINKLER CONTROL PULL BOX
(21) ANCHOR BOLTS AND CONDUIT FOR FUTURE INSTALLATION OF TYPE 21 STANDARD
(T) TRAFFIC PULL BOX

VEHICLE DETECTORS

5 J 9 U

- VEHICLE DETECTOR DESIGNATION
- U = UPPER
  L = LOWER
- SLOT NUMBER IN INPUT FILE
- INPUT FILE (I OR J)
- PHASE

NEW	EXISTING	
		TYPE A DETECTOR LOOP. OUTLINE OF SAWCUT SHOWN
		TYPE B DETECTOR LOOP. OUTLINE OF SAWCUT SHOWN
		TYPE C DETECTOR LOOP. OUTLINE OF SAWCUT SHOWN
		TYPE D DETECTOR LOOP. OUTLINE OF SAWCUT SHOWN
		TYPE E DETECTOR LOOP. OUTLINE OF SAWCUT SHOWN
		TYPE Q DETECTOR LOOP. OUTLINE OF SAWCUT SHOWN
		MAGNETIC DETECTOR
DH	dh	DETECTOR HANDHOLE
		MICROWAVE OR VIDEO DETECTION ZONE

STATE OF CALIFORNIA
DEPARTMENT OF TRANSPORTATION

ELECTRICAL SYSTEMS (LEGEND AND ABBREVIATIONS)

NO SCALE

RSP ES-1C DATED JULY 19, 2013 SUPERSEDES STANDARD PLAN ES-1C DATED MAY 20, 2011 - PAGE 427 OF THE STANDARD PLANS BOOK DATED 2010.

REVISED STANDARD PLAN RSP ES-1C

2010 REVISED STANDARD PLAN RSP ES-1C

DATE PLOTTED => 30-MAR-2015
TIME PLOTTED => 08:31

Dist	COUNTY	ROUTE	POST MILES TOTAL PROJECT	SHEET No.	TOTAL SHEETS
01	Hum	299	R21.1/R21.5	72	76

Theresa Gabriel
REGISTERED ELECTRICAL ENGINEER

July 19, 2013
PLANS APPROVAL DATE

REGISTERED PROFESSIONAL ENGINEER
Theresa Aziz Gabriel
No. E15129
Exp. 6-30-14
ELECTRICAL
STATE OF CALIFORNIA

THE STATE OF CALIFORNIA OR ITS OFFICERS OR AGENTS SHALL NOT BE RESPONSIBLE FOR THE ACCURACY OR COMPLETENESS OF SCANNED COPIES OF THIS PLAN SHEET.

TO ACCOMPANY PLANS DATED 03-27-15

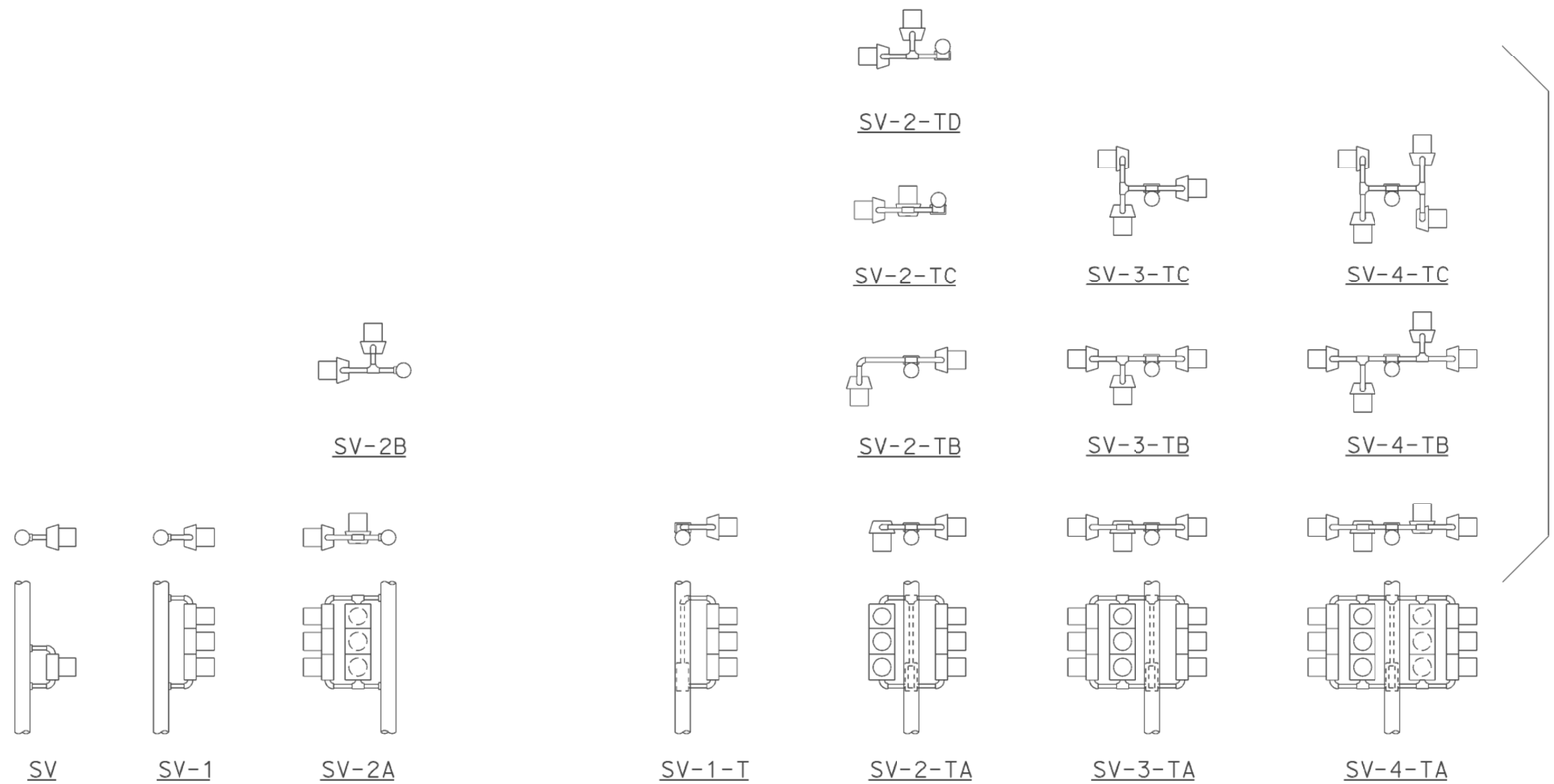

SIDE MOUNTINGS

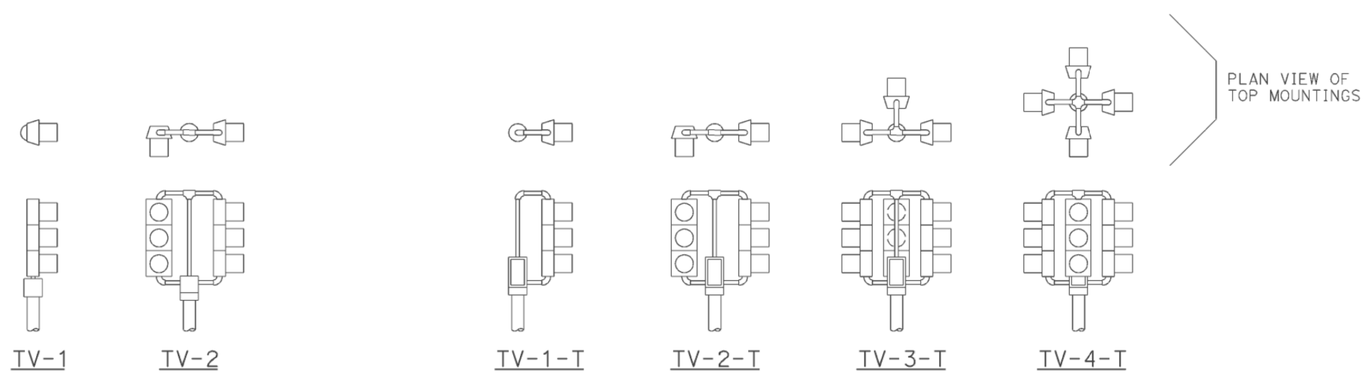

TOP MOUNTINGS

ABBREVIATIONS:

SV	SIDE MOUNTED VEHICLE SIGNALS
T	TERMINAL COMPARTMENT
TV	TOP MOUNTED VEHICLE SIGNALS
1, 2, 3, 4	NUMBER OF SIGNAL FACES (3 - SECTION, UNLESS OTHERWISE INDICATED)
A, B, C, D	CONFIGURATION OF SIGNALS

NOTES:

1. Mountings shall be oriented to provide maximum horizontal clearance to adjacent roadway.
2. Bracket arms shall be long enough to permit proper alignment of signals and backplate installation.
3. See Standard Plans ES-4D and ES-4E for attachment fitting details.

STATE OF CALIFORNIA
DEPARTMENT OF TRANSPORTATION

ELECTRICAL SYSTEMS (VEHICULAR SIGNAL HEADS AND MOUNTINGS)

NO SCALE

RSP ES-4A DATED JULY 19, 2013 SUPERSEDES STANDARD PLAN ES-4A
DATED MAY 20, 2011 - PAGE 443 OF THE STANDARD PLANS BOOK DATED 2010.

REVISED STANDARD PLAN RSP ES-4A

2010 REVISED STANDARD PLAN RSP ES-4A

DATE PLOTTED => 30-MAR-2015
TIME PLOTTED => 08:31

Dist	COUNTY	ROUTE	POST MILES TOTAL PROJECT	SHEET No.	TOTAL SHEETS
01	Hum	299	R21.1/R21.5	73	76

Theresa Gabriel
REGISTERED ELECTRICAL ENGINEER

July 19, 2013
PLANS APPROVAL DATE

REGISTERED PROFESSIONAL ENGINEER
Theresa Aziz Gabriel
No. E15129
Exp. 6-30-14
ELECTRICAL
STATE OF CALIFORNIA

THE STATE OF CALIFORNIA OR ITS OFFICERS OR AGENTS SHALL NOT BE RESPONSIBLE FOR THE ACCURACY OR COMPLETENESS OF SCANNED COPIES OF THIS PLAN SHEET.

TO ACCOMPANY PLANS DATED 03-27-15

VISORS

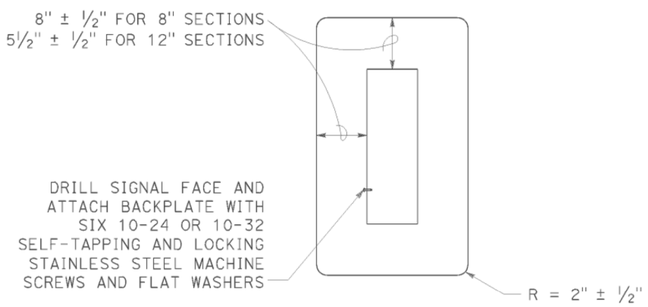

8" AND 12" SECTIONS

BACKPLATE

1/16" minimum thickness
3001-14 aluminum or plastic
when specified

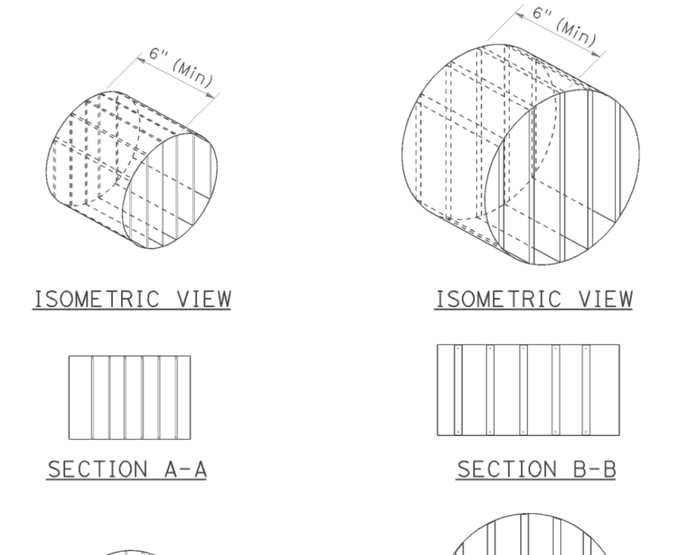

DIRECTIONAL LOUVER

Directional louvers shall be oriented as directed by the Engineer and secured in place with one plated brass machine screw and nut.

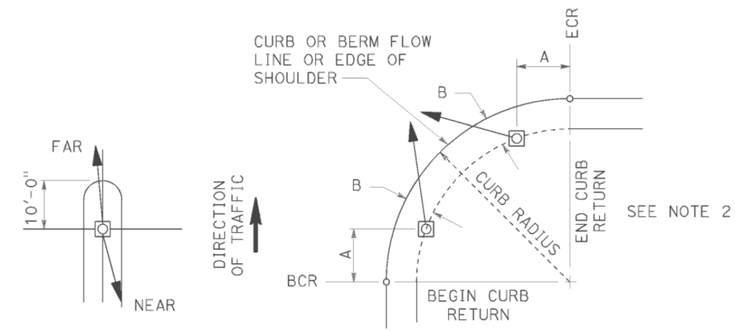

NOTES:

1. Typical signal pole placement unless dimensioned on plans.
2. For A and B dimensions, see Pole Schedule, or as directed by the Engineer.

SIGNAL STANDARD PLACEMENT DIMENSIONS AND EQUIPMENT LOCATIONS

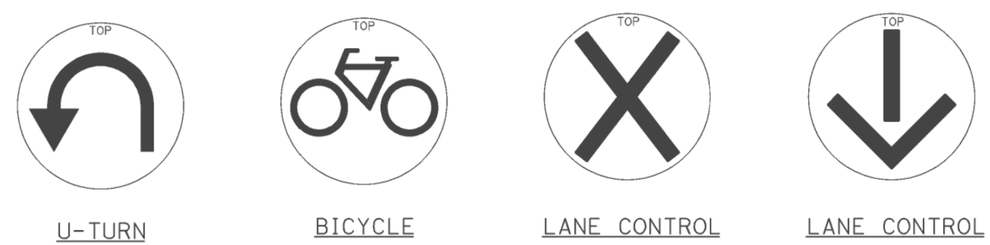

U-TURN | BICYCLE | LANE CONTROL | LANE CONTROL

SIGNAL FACES

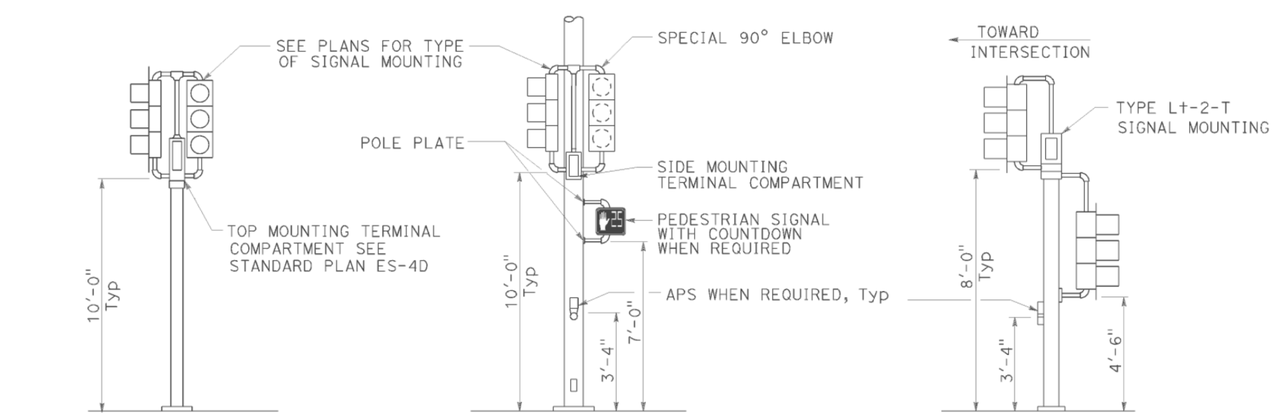

TOP MOUNTED SIGNALS (TV)
Type 1-A, 1-B, 1-C and 1-D standard as indicated on the plans

SIDE MOUNTED SIGNALS (SV AND SP)
Normally used on standards with luminaire or signal mast arm

LEFT TURN LANE SIGNAL
Type 1-A, 1-B, 1-C and 1-D standard as indicated on plans

TYPICAL SIGNAL INSTALLATIONS

STATE OF CALIFORNIA
DEPARTMENT OF TRANSPORTATION

ELECTRICAL SYSTEMS (VEHICULAR SIGNAL HEADS AND MOUNTINGS)

NO SCALE

RSP ES-4C DATED JULY 19, 2013 SUPERSEDES STANDARD PLAN ES-04C
DATED MAY 20, 2011 - PAGE 445 OF THE STANDARD PLANS BOOK DATED 2010.

REVISED STANDARD PLAN RSP ES-4C

2010 REVISED STANDARD PLAN RSP ES-4C

DATE PLOTTED => 30-MAR-2015
TIME PLOTTED => 08:31

Dist	COUNTY	ROUTE	POST MILES TOTAL PROJECT	SHEET No.	TOTAL SHEETS
01	Hum	299	R21.1/R21.5	74	76

Theresa Gabriel
REGISTERED ELECTRICAL ENGINEER

July 19, 2013
PLANS APPROVAL DATE

REGISTERED PROFESSIONAL ENGINEER
Theresa Aziz Gabriel
No. E15129
Exp. 6-30-14
ELECTRICAL
STATE OF CALIFORNIA

THE STATE OF CALIFORNIA OR ITS OFFICERS OR AGENTS SHALL NOT BE RESPONSIBLE FOR THE ACCURACY OR COMPLETENESS OF SCANNED COPIES OF THIS PLAN SHEET.

TO ACCOMPANY PLANS DATED 03-27-15

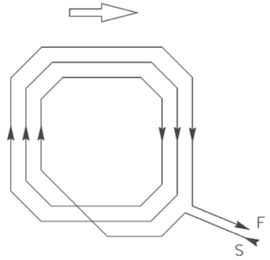

WINDING DETAIL

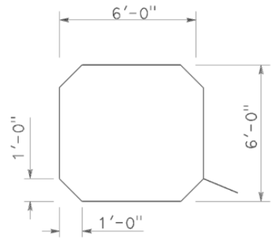

SAWCUT DETAIL

TYPE A LOOP DETECTOR CONFIGURATION

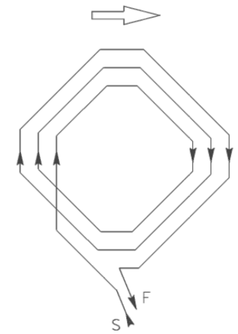

WINDING DETAIL

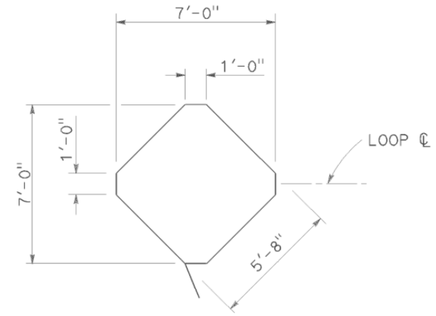

SAWCUT DETAIL

TYPE B LOOP DETECTOR CONFIGURATION

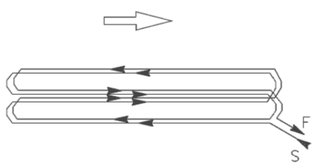

WINDING DETAIL

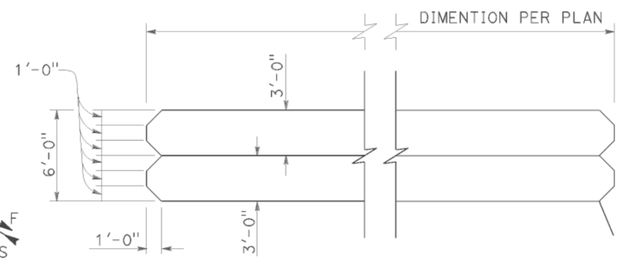

SAWCUT DETAIL

TYPE C LOOP DETECTOR CONFIGURATION

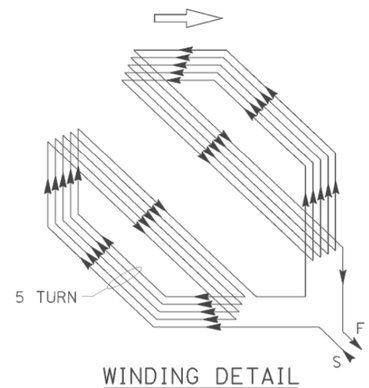

WINDING DETAIL

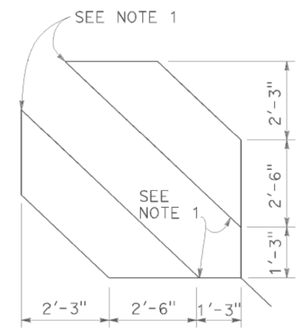

SAWCUT DETAIL

TYPE D LOOP DETECTOR CONFIGURATION

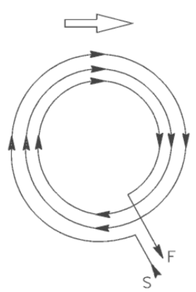

WINDING DETAIL

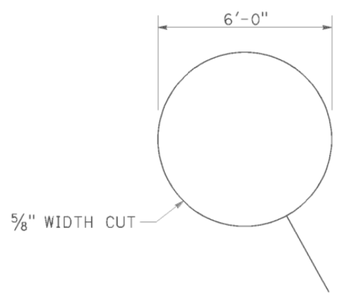

SAWCUT DETAIL

TYPE E LOOP DETECTOR CONFIGURATION

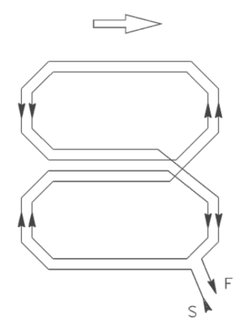

WINDING DETAIL

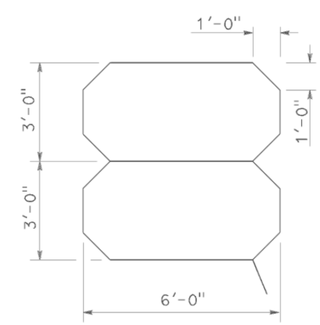

SAWCUT DETAIL

TYPE Q LOOP DETECTOR CONFIGURATION

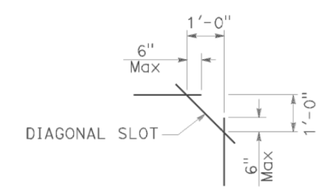

PLAN VIEW OF DIAGONAL SLOT AT CORNERS

NOTES:

1. Round corners of acute angle sawcuts to prevent damage to conductors.
2. Typical distance separating loops from edge to edge is 10' for Type A, B, D and E installation in single lane.

STATE OF CALIFORNIA
DEPARTMENT OF TRANSPORTATION

ELECTRICAL SYSTEMS (DETECTORS)

NO SCALE

RSP ES-5B DATED JULY 19, 2013 SUPERSEDES STANDARD PLAN ES-5B DATED MAY 20, 2011 - PAGE 449 OF THE STANDARD PLANS BOOK DATED 2010.

REVISED STANDARD PLAN RSP ES-5B

2010 REVISED STANDARD PLAN RSP ES-5B

DATE PLOTTED => 30-MAR-2015
TIME PLOTTED => 08:32

Dist	COUNTY	ROUTE	POST MILES TOTAL PROJECT	SHEET No.	TOTAL SHEETS
01	Hum	299	R21.1/R21.5	75	76

Theresa Gabriel
REGISTERED ELECTRICAL ENGINEER

July 19, 2013
PLANS APPROVAL DATE

Theresa Aziz Gabriel No. E15129 Exp. 6-30-14 ELECTRICAL — REGISTERED PROFESSIONAL ENGINEER — STATE OF CALIFORNIA

THE STATE OF CALIFORNIA OR ITS OFFICERS OR AGENTS SHALL NOT BE RESPONSIBLE FOR THE ACCURACY OR COMPLETENESS OF SCANNED COPIES OF THIS PLAN SHEET.

TO ACCOMPANY PLANS DATED 03-27-15

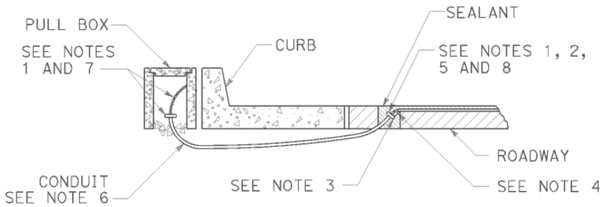

TYPE A
CURB TERMINATION DETAIL

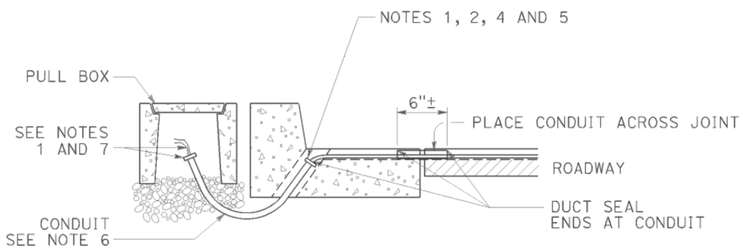

CROSS SECTION

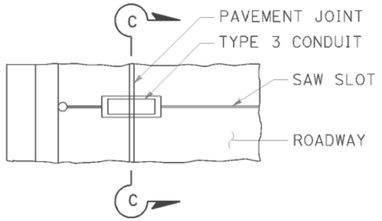

PLAN VIEW

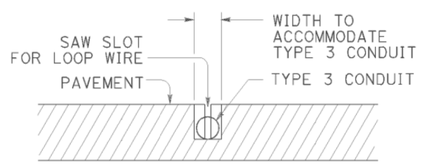

SECTION C-C

TYPE B
CURB TERMINATION DETAIL

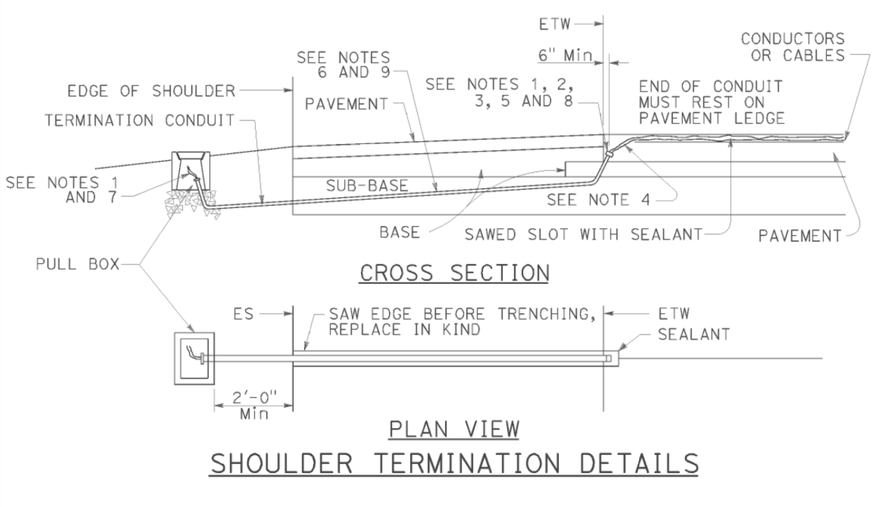

CROSS SECTION

PLAN VIEW

SHOULDER TERMINATION DETAILS

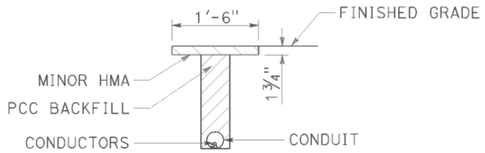

"T" TRENCH
DETAIL T

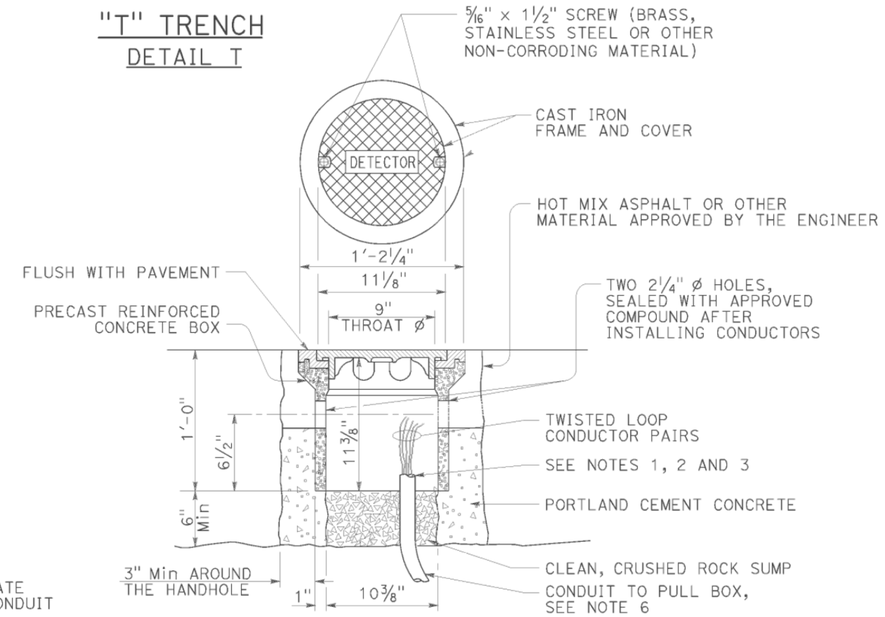

DETECTOR HANDHOLE DETAIL

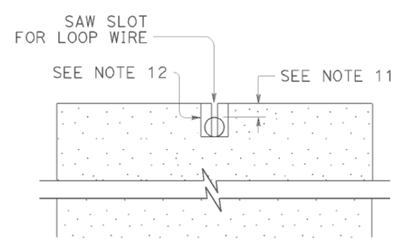

SECTION A-A

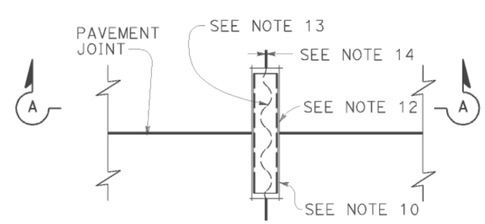

PLAN VIEW

TYPICAL LOOP LEAD-IN DETAIL
AT PAVEMENT JOINT

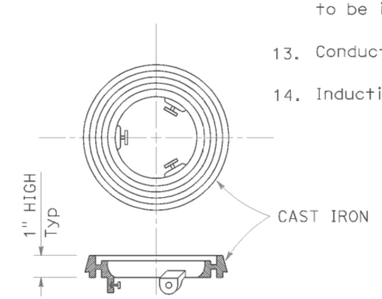

LOCKING GRADE RING

NOTES:

1. Bushing shall be used at end of conduit.
2. Tape detector conductors or cables 3" each side of bushings.
3. Install duct seal compound to each end of termination conduit before installing sealant.
4. Round all sharp edges where detector conductors or cables have to pass.
5. End of conduit shall be 3⅛" below roadway surface.
6.

Conduit size	Loop conductors
1"C minimum	1 to 2 pairs
1½"C minimum	3 to 4 pairs
2"C minimum	5 or more pairs

7. Splice detector conductors or cables to detector lead-in-cable.
8. Location of detector handhole when shown on plans.
9. When the shoulder and traveled way are paved with the same material and there is no joint between them, the conduit shall extend only 2'-0" into the shoulder pavement.
10. ¾"C, Type 3 conduit 6" long minimum, plug both ends with duct compound to keep out sealant.
11. ½" Minimum between top of conduit and pavement surface.
12. Sawcut shall not exceed 1" in width and ⅛" longer than conduit to be installed.
13. Conductors with ½" minimum slack inside conduit.
14. Inductive loop detector saw slot.

STATE OF CALIFORNIA
DEPARTMENT OF TRANSPORTATION

ELECTRICAL SYSTEMS (CURB TERMINATION AND HANDHOLE)

NO SCALE

RSP ES-5D DATED JULY 19, 2013 SUPERSEDES STANDARD PLAN ES-5D DATED MAY 20, 2011 - PAGE 451 OF THE STANDARD PLANS BOOK DATED 2010.

REVISED STANDARD PLAN RSP ES-5D

2010 REVISED STANDARD PLAN RSP ES-5D

DATE PLOTTED => 30-MAR-2015
TIME PLOTTED => 08:32

Dist	COUNTY	ROUTE	POST MILES TOTAL PROJECT	SHEET No.	TOTAL SHEETS
01	Hum	299	R21.1/R21.5	76	76

Theresa Gabriel
REGISTERED ELECTRICAL ENGINEER

July 19, 2013
PLANS APPROVAL DATE

REGISTERED PROFESSIONAL ENGINEER
Theresa Aziz Gabriel
No. E15129
Exp. 6-30-14
ELECTRICAL
STATE OF CALIFORNIA

THE STATE OF CALIFORNIA OR ITS OFFICERS OR AGENTS SHALL NOT BE RESPONSIBLE FOR THE ACCURACY OR COMPLETENESS OF SCANNED COPIES OF THIS PLAN SHEET.

TO ACCOMPANY PLANS DATED 03-27-15

ISOFOOTCANDLE CURVE - MINIMUM

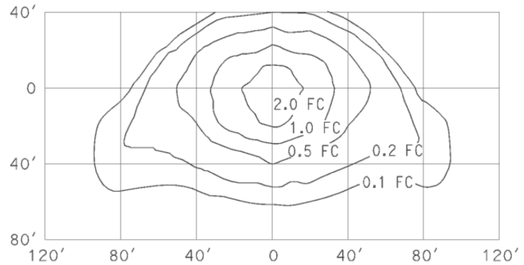

TYPE III MEDIUM CUTOFF

Cutoff Luminaire
34′ Mounting Height
Lamp operated at 22,000 lm
200-W high pressure sodium lamp
ANSI Designation S66

ISOFOOTCANDLE CURVE - MINIMUM

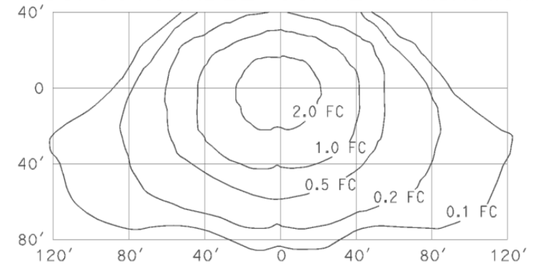

TYPE III MEDIUM CUTOFF

Cutoff Luminaire
40′ Mounting Height
Lamp operated at 37,000 lm
310-W high pressure sodium lamp
ANSI Designation S67

ISOFOOTCANDLE CURVE - MINIMUM

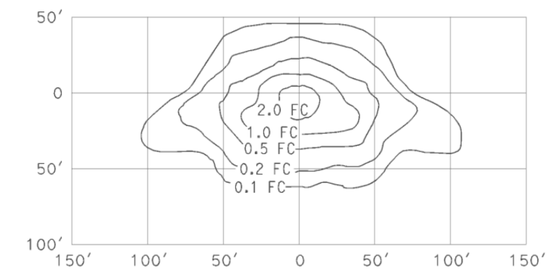

TYPE III MEDIUM CUTOFF

Cutoff Luminaire
30′ Mounting Height
Lamp operated at 16,000 lm
150-W high pressure sodium lamp
ANSI Designation S55

ISOFOOTCANDLE CURVE - MINIMUM

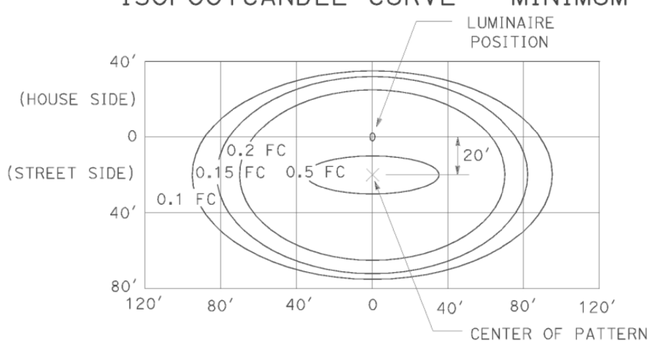

LED LUMINAIRE ROADWAY 1

165-W at 34′ Mounting Height

ISOFOOTCANDLE CURVE - MINIMUM

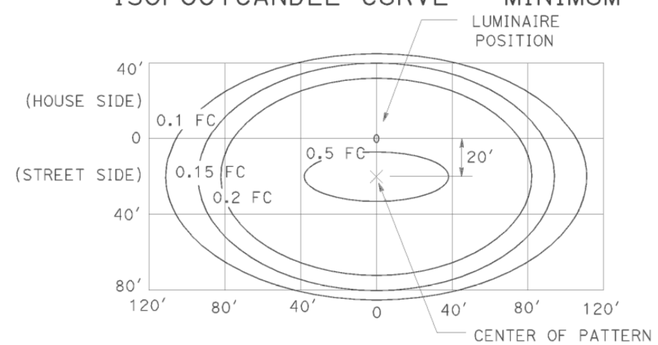

LED LUMINAIRE ROADWAY 2

235-W at 40′ Mounting Height

ISOFOOTCANDLE CURVE - MINIMUM

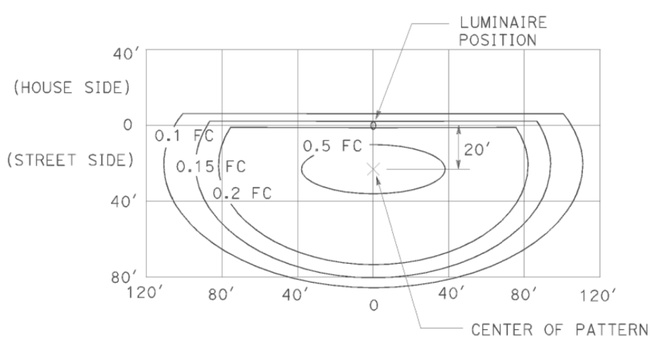

LED LUMINAIRE ROADWAY 3

235-W at 40′ Mounting Height
with back side control

ISOFOOTCANDLE CURVE - MINIMUM

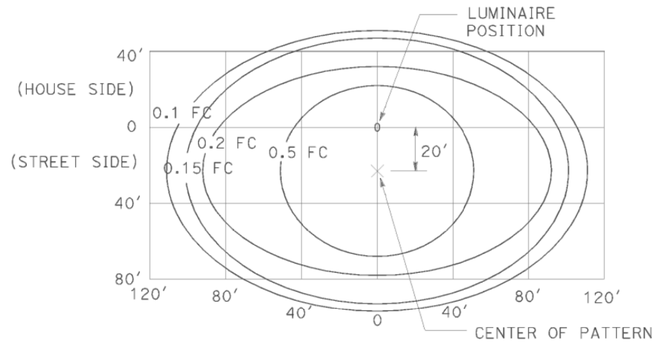

LED LUMINAIRE ROADWAY 4

300-W at 40′ Mounting Height

ISOFOOTCANDLE CURVE - MINIMUM

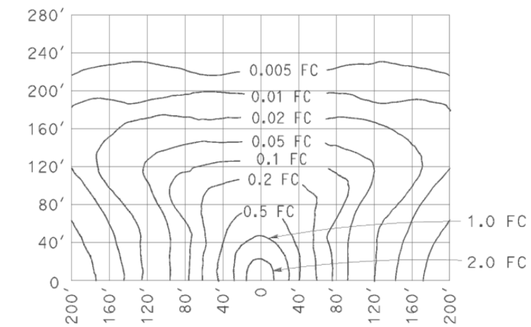

LOW PRESSURE SODIUM LUMINAIRE

40′ Mounting Height
Lamp operated at 33,000 lm
180-W low pressure sodium lamp

STATE OF CALIFORNIA
DEPARTMENT OF TRANSPORTATION

ELECTRICAL SYSTEMS (ISOFOOTCANDLE DIAGRAMS)

NO SCALE

RSP ES-10A DATED JULY 19, 2013 SUPERSEDES RSP ES-10A DATED JULY 20, 2012 THAT SUPPLEMENTS THE STANDARD PLANS BOOK DATED 2010.

REVISED STANDARD PLAN RSP ES-10A

2010 REVISED STANDARD PLAN RSP ES-10A

DATE PLOTTED => 30-MAR-2015
TIME PLOTTED => 08:32